MARTIN MARIETTA ENERGY SYSTEMS LIBRARIES

3 4456 0351219 8

ornl

ORNL/TM-11927

OAK RIDGE
NATIONAL
LABORATORY

MARTIN MARIETTA

Summary Report on the Demonstration of the Duratek Process for Treatment of Mixed-Waste Contaminated Groundwater

Suman P. N. Singh
Thomas F. Lomenick

OAK RIDGE NATIONAL LABORATORY
CENTRAL RESEARCH LIBRARY
CIRCULATION SECTION
4500N ROOM 175
LIBRARY LOAN COPY
DO NOT TRANSFER TO ANOTHER PERSON
If you wish someone else to see this report, send in name with report and the library will arrange a loan.

MANAGED BY
MARTIN MARIETTA ENERGY SYSTEMS, INC.
FOR THE UNITED STATES

This report has been reproduced directly from the best available copy.

Available to DOE and DOE contractors from the Office of Scientific and Technical Information, P.O. Box 62, Oak Ridge, TN 37831; prices available from (615) 576-8401, FTS 626-8401.

Available to the public from the National Technical Information Service, U.S. Department of Commerce, 5285 Port Royal Rd., Springfield, VA 22161.

This report was prepared as an account of work sponsored by an agency of the United States Government. Neither the United States Government nor any agency thereof, nor any of their employees, makes any warranty, express or implied, or assumes any legal liability or responsibility for the accuracy, completeness, or usefulness of any information, apparatus, product, or process disclosed, or represents that its use would not infringe privately owned rights. Reference herein to any specific commercial product, process, or service by trade name, trademark, manufacturer, or otherwise, does not necessarily constitute or imply its endorsement, recommendation, or favoring by the United States Government or any agency thereof. The views and opinions of authors expressed herein do not necessarily state or reflect those of the United States Government or any agency thereof.

ORNL/TM-11927

Chemical Technology Division

SUMMARY REPORT ON THE DEMONSTRATION OF THE DURATEK PROCESS FOR TREATMENT OF MIXED-WASTE CONTAMINATED GROUNDWATER

Suman P. N. Singh
Thomas F. Lomenick

Date Published — April 1992

Prepared for
U.S. Department of Energy
Office of Technology Development
Budget Activity No.
EW4080400

Prepared by the
OAK RIDGE NATIONAL LABORATORY
Oak Ridge, Tennessee 37831-6285
managed by
MARTIN MARIETTA ENERGY SYSTEMS, INC.,
for the
U.S. DEPARTMENT OF ENERGY
under contract DE-AC05-84OR21400

MARTIN MARIETTA ENERGY SYSTEMS LIBRARIES

3 4456 0351219 8

CONTENTS

ACKNOWLEDGEMENTS v

FIGURES vii

TABLES ix

EXECUTIVE SUMMARY xi

ABSTRACT xv

1. INTRODUCTION 1

2. PROJECT SCOPE 3

3. THE TREATMENT PROCESS 11

4. DEMONSTRATION DETAILS 17

5. TEST RESULTS 23

6. CONCLUSIONS AND RECOMMENDATIONS 35

7. REFERENCES 39

APPENDIX A. Report by Duratek Corporation entitled, "Demonstration of Exchange Technology for Treatment of Mixed Waste Contaminated Groundwater" 41

ACKNOWLEDGEMENTS

The authors express their appreciation to the following Martin Marietta Energy Systems, Inc. (Energy Systems) staff for their assistance with this project:

- Jennifer Kasten for researching the data on the groundwaters at the United States Department of Energy (DOE) sites managed by Energy Systems and for developing the treated water quality criteria referred to in the report as the "Energy Systems Treated Groundwater Quality Criteria";
- The bid evaluation team members who, aside from the authors, consisted of Jack Elrod, Rod Kimmitt, and Jim Wilson;
- Charlene Patrick for typing the report and Kathryn King-Jones for technical editing of the manuscript; and
- Other Energy Systems staff who reviewed the draft reports and provided critical and useful comments.

FIGURES

1. Block flow diagram for treating mixed-waste contaminated water 12

2. Block diagram of systems for stripping waste-loaded A and C columns 13

3. Sketch of the bench-scale treatment scheme to treat the surrogate mixed-waste contaminated groundwater 18

4. Process flow diagram of the Duratek pilot plant to treat the mixed-waste contaminated water 20

5. Layout of the Duratek pilot plant to treat the mixed-waste contaminated water 21

TABLES

1. Proposed constituents for surrogate groundwater and desired treatment standards 4

2. Energy Systems-adopted treated groundwater quality criteria 6

3. Estimated treatment capacity of the Durasil® ion-exchange media 15

4. Required contaminant concentrations in the surrogate mixed-waste groundwater and the target decontamination factors to be achieved by the treatment process 24

5. Test results after passing influent through air stripper and column 1A 25

6. Test results after passing influent through column 1A 26

7. Test results after passing influent through column 1C 27

8. Test results after passing influent through column 2D 28

9. Analytical data from integrated benchscale water decontamination system during first week of operation 29

10. Pilot plant operating data after 2 weeks of operation 31

11. Analytical data from the pilot plant after 2 weeks of operation 34

EXECUTIVE SUMMARY

This project consists of demonstrating an innovative process from the private sector for the treatment of mixed-waste contaminated groundwater (that is, groundwater contaminated with radioactive and hazardous/toxic compounds) found at the Department of Energy (DOE) industrial sites managed by Martin Marietta Energy Systems, Inc. (Energy Systems). These sites include the Oak Ridge Reservation (Oak Ridge National Laboratory, the K-25 Site, and the Y-12 Plant) in Oak Ridge, Tennessee; the Paducah Gaseous Diffusion Plant in Paducah, Kentucky; and the Portsmouth Gaseous Diffusion Plant in Piketon, Ohio. Groundwaters at these sites have been found to be contaminated with radioactive species (chiefly uranium-238 and technetium-99) and organic and inorganic hazardous compounds, such as polychlorinated biphenyls (PCBs), benzene, trichloroethane, and barium, cadmium, and chromium salts. The objective of this project was to identify and demonstrate an innovative process that could be used to satisfactorily treat the mixed-waste contaminated water to meet drinking water quality standards.

Following the prescribed evaluated procurement guidelines, the proposal submitted by a team composed of Duratek Corporation (Duratek) and the Vitreous State Laboratory (VSL) of the Catholic University of America located in Washington, D. C. was selected for demonstration. Their proposal consisted of demonstrating the Duratek process for treating the mixed-waste contaminated groundwater. Briefly, this process consists of treating the contaminated water by air sparging and then passing it through a series of columns containing Duratek proprietary Durasil® ion-exchange media. The ion-exchange media remove the

radioactive and hazardous compounds from the water to levels below national drinking water quality standards. Duratek and VSL developed the process and demonstrated it in a pilot plant capable of processing 1 gal/min of the contaminated water. The treated water from the process can be used for other operations at the site.

Following breakthrough, the spent ion-exchange media loaded with the contaminants are removed from the water treatment circuit for regeneration of the media and recovery of the contaminants. During the regeneration operation, the radioactive contaminants are separated from the hazardous species using another proprietary Durasil® ion-exchange medium.

The secondary wastes from the process will likely consist of spent activated carbon traps (containing the volatile organic compounds), spent charcoal-based media (containing the radioactive species), and spent glass-based media (containing the hazardous components). The carbon-based spent media can be incinerated and the spent glass-based media can be vitrified resulting in further reduction of the secondary wastes from the process and encapsulation of the hazardous compounds. In addition, if a reverse osmosis unit is used to reduce the concentration of the nontoxic species in the water (such as nitrates and sulfates of alkali metals), a retentate stream will be generated that would require disposal. The disposal of the retentate depends upon its salt concentration. For example, it can be discharged to the wastewater treatment plant, biotreated, or converted into a salt cake for disposal in a landfill.

The pilot-plant demonstrations showed that the Durasil® ion-exchange media have high capacities for removing the contaminants from the water thereby proving superior to conventional polymeric ion-exchange resins. Preliminary cost estimates by Duratek

Corporation for a full-scale treatment facility places the treatment costs at about 10¢/gal of mixed-waste contaminated water treated. These estimates do not include analytical costs or the costs for the disposal of the secondary wastes from the process. The costs associated with this treatment facility are somewhat higher than the cost of similar water treatment using the conventional ion-exchange resins. However, the superior performance and high capacities of the Durasil® media and their ability to separate the radioactive contaminants from the hazardous species should mitigate the higher estimated treatment costs.

The details of the demonstration as well as conclusions and recommendations on the Duratek process are given in this report. The major conclusion is that the Duratek process can effectively remove the radioactive and the hazardous waste species in the mixed-waste contaminated water to below current and proposed drinking water quality standards. The major recommendation, based on the pilot-scale tests, is that the Duratek process should be considered for remediating the mixed-waste contaminated groundwater found at the Energy Systems-managed DOE sites. Further demonstration and testing of the Duratek process should enhance its applicability and help in determining the actual costs of treating mixed-waste contaminated waters.

SUMMARY REPORT ON THE DEMONSTRATION OF THE DURATEK PROCESS FOR TREATMENT OF MIXED-WASTE CONTAMINATED GROUNDWATER

Suman P. N. Singh
Thomas F. Lomenick

ABSTRACT

This report presents the results of the demonstration of the Duratek process for removal of radioactive and hazardous waste compounds from mixed-waste contaminated groundwaters found at the Department of Energy (DOE) sites managed by Martin Marietta Energy Systems (Energy Systems). The process uses Duratek proprietary Durasil® ion-exchange media to remove the above contaminants from the water to produce treated water that can meet current and proposed drinking water quality standards with regard to the above contaminants. The demonstration showed that the process is simple, compact, versatile, and rugged and requires only minimal operator attention. It is thus recommended that this process be considered for remediating the mixed-waste contaminated waters found at the Energy Systems-managed DOE sites.

1. INTRODUCTION

This project was undertaken to assist the U.S. Department of Energy (DOE) by identifying treatment methods that could be used to treat mixed-waste contaminated groundwaters (i.e., groundwater contaminated with radioactive, toxic, and/or hazardous compounds) found at DOE industrial sites. Due to past industrial practices, the groundwater at many DOE sites has become contaminated with radioactive and hazardous/toxic compounds. The satisfactory remediation of these contaminated groundwaters is of considerable concern to DOE as pressure from regulatory groups and environmental agencies mounts. While the bulk of the contaminants can be removed from the water using available commercial processes, there is a dearth of processes that can be used to remove the residual contaminants down to the low levels currently required by regulations.

The objective of this project was to demonstrate the efficacy of innovative private-sector developed treatment processes that could be used to satisfactorily remove radioactive and hazardous constituents down to the desired levels from contaminated groundwater on DOE, Oak Ridge Field Office (DOE-OR) sites operated by Martin Marietta Energy Systems, Inc. (Energy Systems). Current statutes, such as the Comprehensive Environmental Response, Compensation and Liability Act (CERCLA) and the Resource Conservation and Recovery Act (RCRA) and their amendments, have set strict guidelines for the remediation and protection of the nation's groundwater. These regulations guide the groundwater

monitoring and protection plans at the Energy Systems-managed facilities. Therefore, remedial action plans and appropriate treatment processes are needed to treat the contaminated groundwater.

The goal of this project was not only to identify but also demonstrate treatment operations that could successfully decontaminate mixed waste contaminated groundwater to meet Energy Systems' adopted treated groundwater quality criteria. If such technology was demonstrated, then it could be successfully employed to treat the water not only at the DOE sites managed by Energy Systems but at other similarly contaminated sites nationwide as well.

2. PROJECT SCOPE

The scope of the project consisted of the following steps:

- Developing the composition of a candidate water that reflects the composition of the contaminated groundwaters found at the five DOE sites managed by Energy Systems (hereafter referred to as Energy Systems-managed sites.) The concentration ranges of the hazardous compounds known to occur in the groundwaters at the Energy Systems-managed sites are given in Table 1. Table 1 was developed based on information obtained from site environmental reports by Rogers, et al. [1-3] This information was reviewed along with more current analytical data on some groundwaters at the Y-12 plant provided by Kimbrough[4] to arrive at the list given in Table 1.

- Establishing the desired level to which the hazardous compounds must be removed from the surrogate water by the treatment process. The treatment goals for the contaminants are also given in Table 1. These goals were obtained from the Energy Systems adopted treated groundwater quality criteria that are shown in Table 2. These values were developed based on the premise that the treated groundwater should be able to meet the U.S. Environmental Protection Agency's current and proposed regulations for the contaminants listed in Table 2 in drinking water. The information for developing the criteria given in Table 2 was obtained from the Code of Federal Regulations[5] and the Federal Register.[6,7]

Table 1. Proposed constituents for surrogate groundwater and desired treatment standards

Compound	Proposed concentrations (mg/L)	Desired treatment standards (mg/L)
	Heavy metals	
Barium	10-100	1.0
Cadmium	0.1-1.0	0.01
Chromium	0.1-1.0	0.05
Copper	10-100	1.0
	Volatile organic compounds	
Carbon tetrachloride	0.01-5	0.005
Tetrachloroethylene	0.01-5	0.005
Trichloroethane	0.01-5	0.005
Vinyl chloride	0.01-2	0.002
Methylene chloride	0.01-2	0.002
Benzene	0.01-5	0.005
Toluene	20-100	2
Xylenes	50-100	10
	Nitrates	
Nitrates	30-250	10
	Radionuclides	
Uranium-238	0.1-1[a]	0.01
Technetium-99	10,000-1000[b]	900[c]
	PCBs	
PCBs	1	.001

Table 1 (continued)

Compound	Proposed concentrations (mg/L)	Desired treatment standards (mg/L)
Elemental analysis and miscellaneous parameters		
Calcium	50	TBD[d]
Chloride	1	25
Iron	2	0.3
Magnesium	30	TBD
Manganese	.01	0.5
Potassium	2	TBD
Sodium	5	4.5
Zinc	10	5.0
Sulfate	30	25
Conductivity	300 µmhos/cm	TBD

[a]Present as U_3O_8.
[b]Present as pCi/L of TcO_4.
[c]pCi/L.
[d]TBD = to be determined.

Table 2. Energy Systems-adopted treated groundwater quality criteria

Parameter	Maximum limit (mg/L)[a]
Arsenic	0.05
Barium	1.0
Cadmium	0.01
Chromium	0.05
Copper	1.0
Fluoride	2.4
Iron	0.3
Lead	0.05
Manganese	0.5
Mercury	0.002
Nickel	0.1
Nitrate[b]	10.0
Selenium	0.01
Silver	0.05
Sulfate	400
Thallium	0.0005
Zinc	5
pH[c]	6.5–8.5
Total suspended solids	31.0
Total dissolved solids	500.0
Oil and grease	26.0
Total residual chlorine	0.1
Total toxic organics	2.13
PCB[d]	0.001
PCB[e]	0.0005
Gross alpha[f]	15 pCi/L
Combined radium-226 and radium-228	5 pCi/L

Table 2 (continued)

Parameter	Maximum limit (mg/L)[a]
Gross beta	4 mrem/year
Radium-228	1 pCi/L
Strontium-90	8 pCi/L
Technetium-99	900 pCi/L
Thorium-231	587 pCi/L
Thorium-234	59 pCi/L
Tritium	20,000 pCi/L
Zirconium-95	200 pCi/L
Benzene	0.005
Carbon tetrachloride	0.005
1,1-dichloroethylene	0.007
1,2-dichloropropane	0.005
Tetrachloroethylene	0.005
Toluene	2
1,1,1-trichloroethane	0.2
Trichloroethylene	0.005
Trihalomethanes (total)[g]	0.1
Vinyle chloride	0.002
Xylenes	10

[a]All values are in mg/L unless indicated otherwise.
[b]Indicates nitrate present as nitrogen.
[c]Dimensionless.
[d]Includes Aroclor 1254 and 1260.
[e]Includes Aroclor 1016, 1221, 1232, 1242, and 1248.
[f]Includes radium-226, but excludes radon and uranium.
[g]Sum concentration of chloroform, bromoform, bromodichloromethane, and dibromochloromethane.

- Pulsing the private sector through a competitive bid process to identify suitable (preferably innovative) technologies to treat the surrogate contaminated water by issuing a request for proposals (RFP).

- Evaluating industrial responses to the RFP and selecting the most promising treatment method by using an evaluated procurement strategy.

- Awarding the contract to the most promising process and having the private company demonstrate the capabilities of its process to treat the surrogate groundwater at a sustained rate of 1 gal/min.

- Monitoring and evaluating the demonstration test results, assessing the efficacy of the process, and determining its applicability to remediate mixed waste contaminated water.

- Preparing an assessment report and promoting the use of the demonstrated process to treat contaminated waters at DOE sites.

As part of the procurement strategy to obtain the desired treatment process an "Expression of Interest" letter was sent to 230 prospective private companies to determine their interest in developing/providing the technology. Seventeen companies responded that they would be interested in receiving the RFP for the project. Of these, four companies responded with proposals to develop/provide the decontamination process.

The four proposals were comprehensively evaluated and ranked in accordance with the evaluation procurement guidelines by an team of Energy Systems staff. These guidelines stipulate that the vendor proposals be evaluated using a weighted point rating system. This method objectively evaluates the proposals based on the following main criteria: 1) the technical merits of the proposed approach and process to treat the groundwater; 2) the vendor's corporate and technical staff's experience in treating similar wastes; and 3) the cost for performing the technology demonstration as given in statement of work. The evaluation team consisted of five voting members. Four of these were engineers with expertise in radioactive waste management, groundwater treatment, and process engineering. The fifth member was a procurement specialist. The bid evaluation team was supplemented by five nonvoting Energy Systems staff with considerable experience in water treatment and environmental affairs who served as consultants to the evaluation team.

The four proposals were ranked and, based on the available funds, a contract was let to the highest ranking proposal to undertake the decontamination project. This proposal was submitted by a team consisting of Duratek Corporation (Duratek) and the Vitreous State Laboratory (VSL) of the Catholic University of America (CUA). Duratek started work on the project in February 1991 following completion of contract formalities and release of the necessary funds by DOE's Office of Technology Development (OTD).

3. THE TREATMENT PROCESS

The treatment process developed by Duratek (and VSL) to treat the mixed-waste contaminated water essentially consisted of removing the volatile organic compounds (VOCs) from the water by air sparging and then passing the water through a series of columns containing proprietary Durasil® ion-exchange media designed to remove the radioactive and toxic components from the water. Figure 1 is a block flow diagram of the process that illustrates the contaminants removed by the various columns. The treated water from the process can either be discharged or used within the industrial facility where the groundwater was withdrawn. The Durasil® media in columns A and C are charcoal based while that in column D is glass based. The ion-exchange media are Duratek proprietary media that are chemically treated to trap the indicated contaminants. These Durasil® media differ from more conventional ion-exchange resins in that they are not polymeric resins but are chemically treated charcoal and glass-based materials that act more like molecular sieves. Howard[8] indicated that these Duratek ion-exchangers have significantly higher capacities for the contaminants than conventional ion-exchange resins.

Figure 2 is a block flow diagram for stripping the contaminants loaded on the Durasil® media in columns A and C (shown in Fig. 1) so as to separate the radioactive components from the other contaminants. This separation is achieved by using another specially treated, charcoal-based Durasil® medium loaded in column H. This medium is specifically designed to trap only the radioactive contaminants from the regeneration of the spent columns in the primary water treatment operation. When loaded, the spent medium in column H can be removed and incinerated. The residue from incineration can be mixed

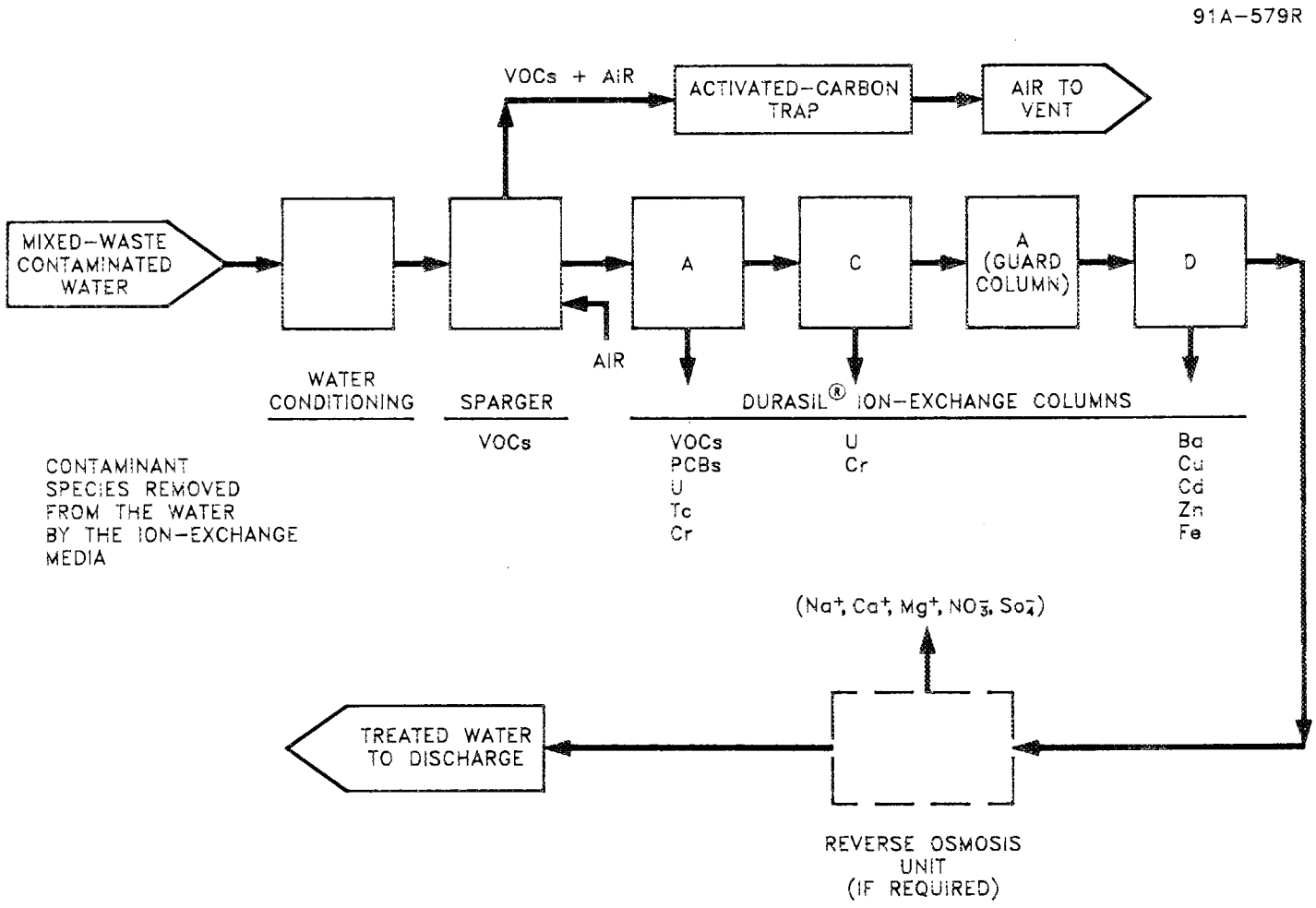

Fig. 1. Block flow diagram for treating mixed-waste contaminated water.

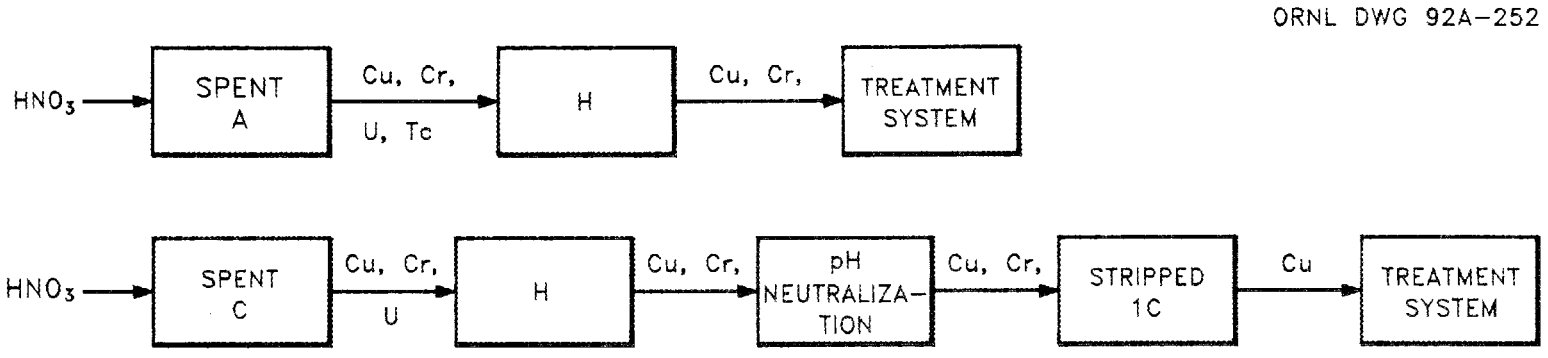

Fig. 2. Block diagram of systems for stripping waste-loaded A and C columns.

with the spent glass-based medium from column D and vitrified to encapsulate the contaminants. Table 3 gives the estimated treatment capacities of the various Durasil® media developed in this project.

The process can not only remove the mixed-waste contaminants from the water but can also separate the radioactive contaminants from the hazardous/toxic components. This greatly facilitates the disposal of the secondary wastes from the process. The secondary wastes likely to be generated in the process consist of spent media, spent activated carbon (containing the VOCs), and, if required, spent reverse osmosis media (i.e., fouled membranes), and a retentate stream containing the Na, Ca, Mg, NO_3, and SO_4 ions. Duratek[9] estimates that processing one million gallons of the mixed-waste contaminated water to meet the desired treatment levels will result in the production of 25 ft^3 of charcoal-based and 57 ft^3 of glass-based spent ion-exchange media loaded with the toxic compounds and approximately 33 ft^3 of charcoal-based spent media loaded with the radioactive components. In addition, Duratek[9] indicates that the secondary waste volume can be further reduced by at least a factor of 10 by incinerating the charcoal-based spent media and vitrifying the glass-based spent media. Further, the residue from the incineration of the charcoal-based media could also be vitrified with the spent glass-based media thereby encapsulating and removing the contaminants from the environment.

Duratek[9] Corporation estimated that a facility designed to treat 10,000 gal/d of the mixed-waste contaminated water to the indicated treatment standards would cost (in 1991 U.S. dollars) approximately 10¢/gal of water treated. This cost estimate includes an allowance for the capital cost and the operating costs for the facility but does not include analytical costs and the cost for the disposal of the secondary wastes from the process.

Table 3. Estimated treatment capacity of the Durasil® ion-exchange media

Ion-exchange media	Treatment capacity (gal/ft^3)[a]
A	49,000[b]
C	>160,000
D	17,500
H	30,000

[a]Gallons of contaminated water per cubic foot of ion-exchange media.

[b]Assuming one regeneration of the column.

Further details on the process, the bench-scale testing, and the demonstration are given in the following sections and in the report prepared by Duratek Corporation given in Appendix A.

4. DEMONSTRATION DETAILS

The decontamination of the mixed-waste surrogate water was accomplished in two phases as described below.

Phase 1: Phase 1 of the demonstration consisted of conducting bench-scale tests. These tests were performed to achieve the following:

- Identification and/or development of the ion-exchange media that would result in achieving the desired removal of the contaminants from the surrogate groundwater;
- Development of a treatment scheme for the surrogate contaminated water;
- Determination of the significant process variables and the optimum operating conditions for achieving the treatment goal;
- Determination of the secondary wastes likely to be generated, their characteristics, and disposal options; and
- Identification of any problems with decontaminating the mixed-waste water using the proposed treatment method.

The bench-scale testing was performed by VSL and basically consisted of treating the surrogate water through small columns (6 mL by volume) of several different ion-exchange materials. These columns contained the tailored, Duratek proprietary, ion-exchange media designed to separate and remove the contaminants from the mixed-waste water. Figure 3 is a sketch of the bench-scale treatment scheme developed by VSL to treat the mixed-waste surrogate groundwater.

The results of the Phase 1 tests indicated that VSL (and Duratek) were able to not only treat the mixed-waste surrogate groundwater to meet the Energy Systems-adopted

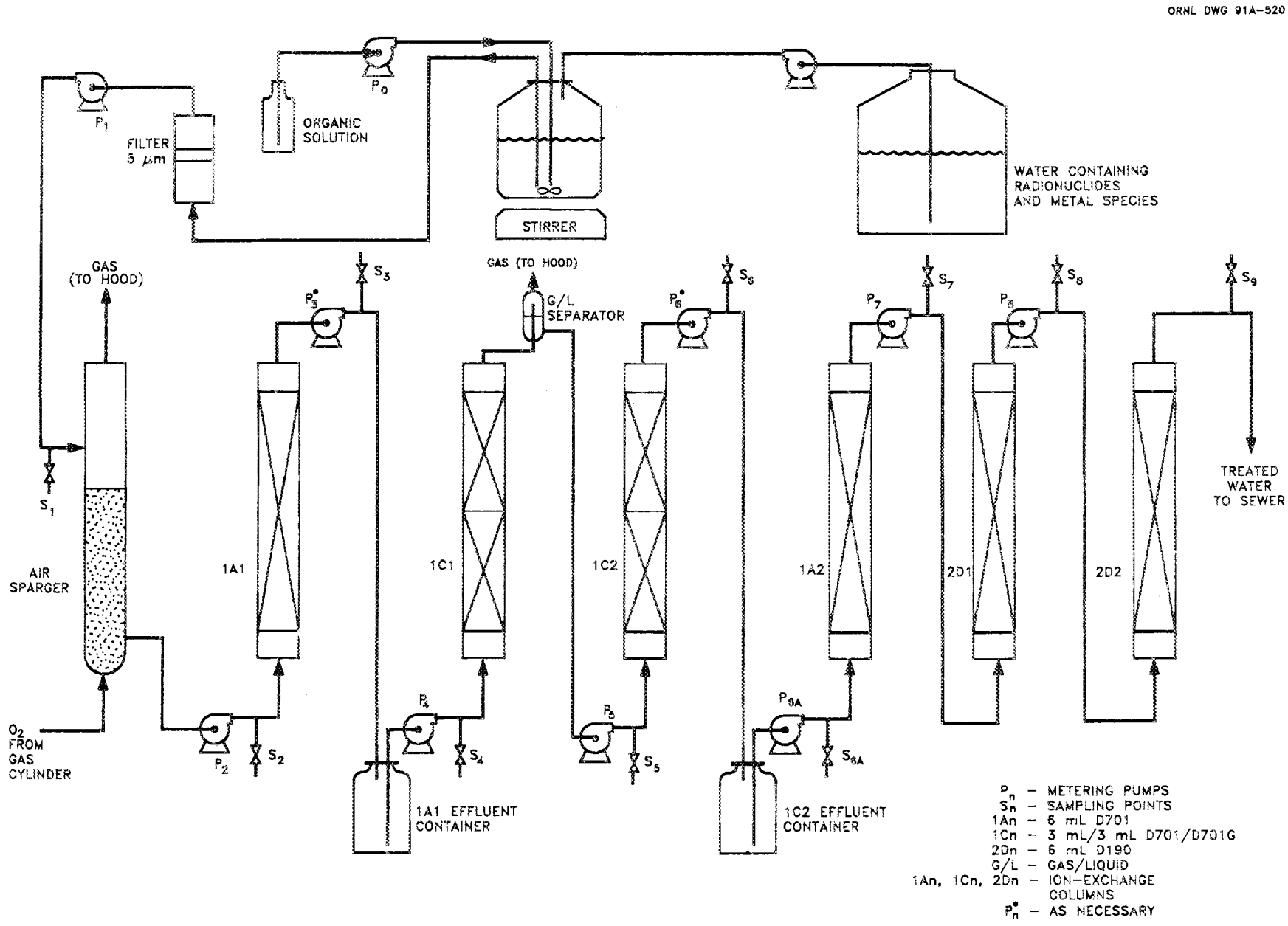

Fig. 3. Sketch of the bench-scale treatment scheme to treat the surrogate mixed-waste contaminated groundwater.

treated groundwater quality standards, but were also able to separate the contaminants in the mixed-waste water into two secondary waste streams—one containing only the radioactive species and the other the hazardous/toxic species. This separation greatly facilitates the disposal of the secondary wastes because the wastes do not have to be disposed as radioactive hazardous wastes.

The bench-scale test results are given in the next section and the details of the testing are given in Appendix A.

Phase 2: Phase 2 consisted of demonstrating the process at a pilot plant scale designed to treat the surrogate mixed-waste contaminated groundwater at the rate of 1 gal/min. The pilot plant tests were conducted to achieve the following:

- Demonstration of the scalability and capabilities of the process by performing the treatment in industrial-scale equipment;
- Identification of any problems with operating the process at an industrial scale such as flooding, channeling, and excessive pressure drop through the columns; and
- Generation of data for the industrial application of the decontamination process.

The pilot plant operations were performed by Duratek and VSL at the VSL facility. Figure 4 is the process flow diagram of the pilot plant and Fig. 5 is the layout of the pilot plant at the VSL facility. The pilot plant basically replicates the bench-scale process on a larger scale. The pilot plant consists of treating the mixed-waste contaminated surrogate groundwater through cylindrical ion-exchange columns that are 6-in. ID by 5-ft long. The volume of each column is approximately 1 ft^3 (7.5 gal or 28 L). The first three columns of the pilot plant are fabricated of 304 stainless steel (to resist attack by organics) while the

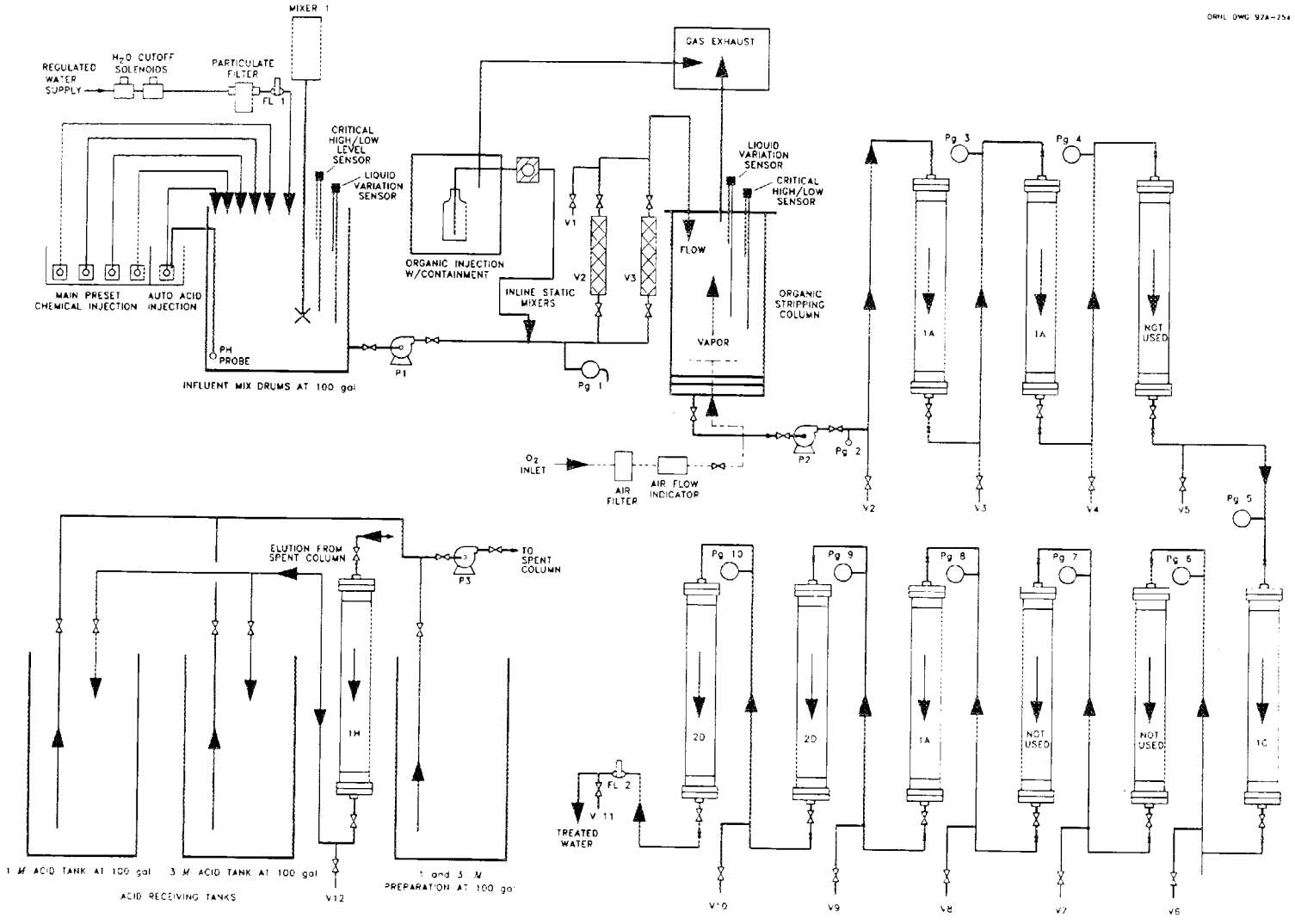

Fig. 4. Process flow diagram of the Duratek pilot plant to treat the mixed-waste contaminated water.

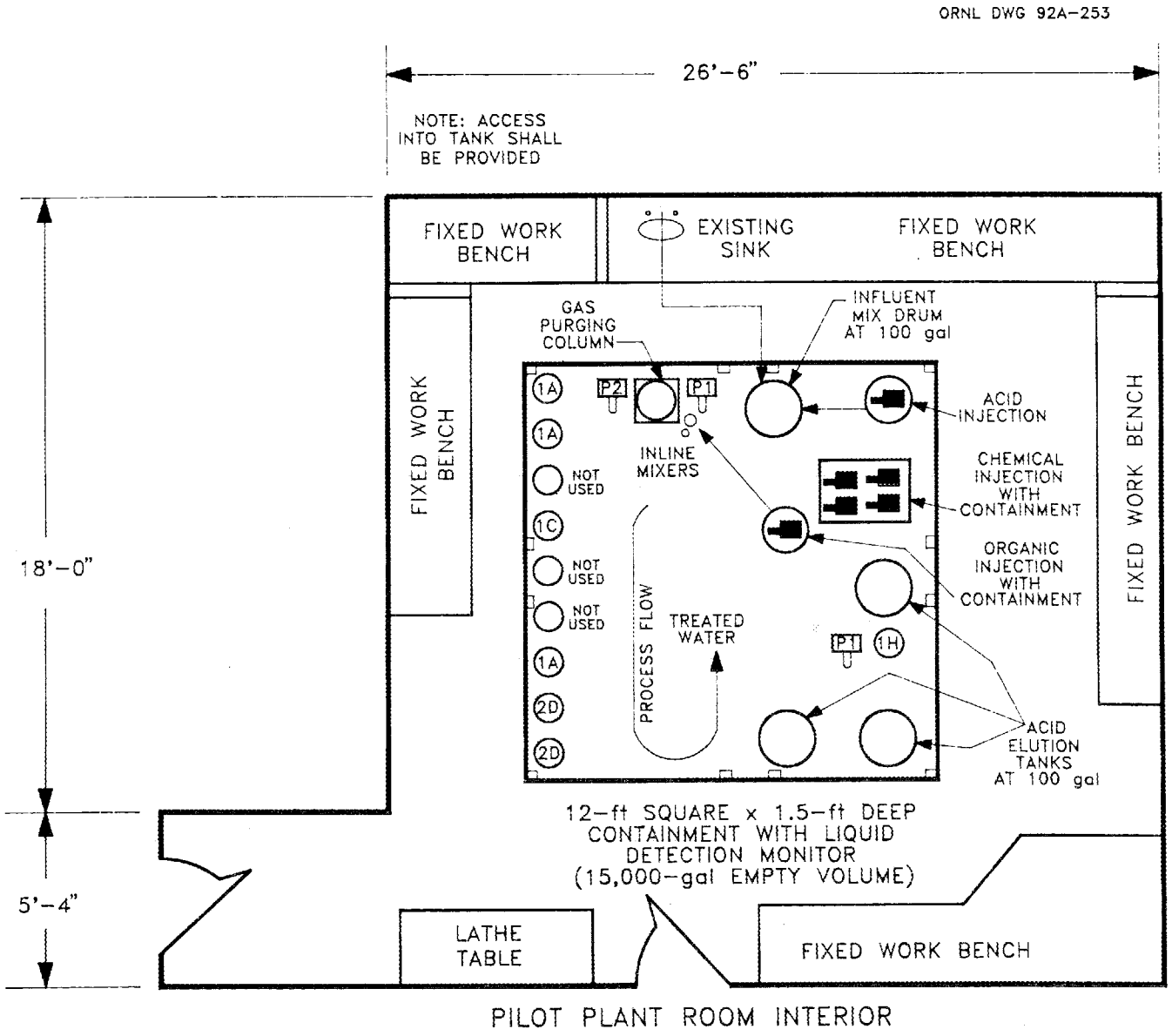

Fig. 5. Layout of the Duratek pilot plant to treat the mixed-waste contaminated water.

remaining columns are made from PVC or clear plastic pipe. Columns 1A, 1C, and 2D each contain 6 gal of ion-exchange media.

Further details of the pilot plant operation are given in Appendix A, and the test results are given in the next section.

5. TEST RESULTS

The results obtained from the bench-scale and the pilot plant treatment of the surrogate mixed-waste contaminated groundwater using Duratek's ion-exchange process are summarized in this section. Additional details and analysis of these results are given in Appendix A.

The required concentrations of the contaminants in the surrogate mixed-waste water before and after treatment and the respective target decontamination factors (DFs) are given in Table 4. It should be noted that, because of the solubility limits for certain ions, the pH of the influent water to the treatment train was adjusted to 5.5 to prevent some of the toxic elements from precipitating out of the surrogate groundwater. When treating actual groundwaters, such conditioning may or may not be required depending upon the quality of the groundwater and the treatment objective. The bench-scale test results are given in Tables 5 through 8 and summarized in Table 9 for the integrated bench-scale treatment unit. The test results obtained from the operation of the pilot plant are summarized in Table 10.

An ion-exchange column is designed to remove the contaminants from the fluid by trapping them on the media as the fluid passes through the column. Its effectiveness can be measured by two factors: 1) the concentration of the contaminant in the effluent from the column, and 2) the volume of influent that is treated by the column before "breakthrough" of the contaminant in the treated fluid exiting the column. Because these two factors are significant in evaluating the test results, a brief description of these two factors is given before discussing the test results.

Table 4. Required contaminant concentrations in the surrogate mixed-waste groundwater and the target decontamination factors to be achieved by the treatment process

Contaminant species	Required concentrations (mg/L)		Target decontamination factor (DF)
	Before treatment	After treatment	
Barium	10–100	1.0	100
Cadmium	0.1–1	0.01	100
Calcium	50	TBD[a]	TBD
Chromium	0.1–1	0.05	20
Copper	10–100	1.0	100
Iron	2	0.3	7
Magnesium	30	TBD	TBD
Manganese	0.01	0.5	0.02
Potassium	2	TBD	TBD
Sodium	5	4.5	1.1
Zinc	10	5	2
Technetium-99	5.9×10^{-5} to 5.9×10^{-4}	5.3×10^{-5}	11
Uranium-238	0.1–1	0.01	100
Chloride	1	25	0.04
Nitrate	30–250	10	25
Sulfate	30	25	1.2
Carbon tetrachloride (CCl_4)	0.01–5	0.005	1000
Tetrachloroethylene (C_2Cl_4)	0.01–5	0.005	1000
Trichloroethane (CH_3CCl_3)	0.01–5	0.005	1000
Vinyl chloride (CH_2CHCl)	0.01–2	0.002	1000
Methylene chloride (CH_2Cl_2)	0.01–2	0.002	1000
Benzene (C_6H_6)	0.01–5	0.005	1000
Toluene ($C_6H_5CH_3$)	20–100	2	50
Xylene [$C_6H_4(CH_3)_2$]	50–100	10	10
PCB	1	0.001	1000

[a]TBD = to be determined.

Table 5. Test results after passing influent through air stripper and column 1A

Species	Conc in influent[a] (ppm)	Conc in effluent of air stripper[b] (ppb)	DF air stripper	Conc in effluent of Col 1A[c] (ppb)	DF 1A	DF Total
Carbon tetrachloride	5	<1	>5,000	<1		>5,000
Tetrachloroethylene[d]	<1	<1		<1		
Trichloroethane	75	1,855	40	6	309	12,500
Methylene chloride[e]						
Benzene	75	65	1,150	<1	>65	>75,000
Toluene	215	300	720	<1	>300	>215,000
Xylenes	70	40	1,750	<1	>40	>70,000

[a]Flow rate of influent (F_{inf}) = 0.53 cm^3/min.

[b]Flow rate of air (F_{air}) = 100 cm^3/min, F_{air}/F_{inf} = 189, and height of influent bubbled = 13 cm.

[c]Column volume = 6.0 cm^3 and residence time = 11.3 min.

[d]Tetrachloroethylene and vinyl chloride (a gas) were found to be too volatile to remain in solution.

[e]Tenative analytical data for methylene chloride suggests DF values in the air stripper of around three orders of magnitude.

Table 6. Test results after passing influent through column 1A[a]

Species	Conc in influent (ppm)	Average Conc in effluent before breakthrough (ppb)	DF	Capacity[b] (column volumes)
Cu	10	2.5	4000	300
Cr	1	170	6	1100
Cd	1	10	100	50
U	1	0.25	4000	900
Tc	0.0012	<0.025	>48	>500
Mg	30	NA[c]	NA	NA
Ca	50	NA	NA	NA
Na	6.5	NA	NA	NA
K	3.6	NA	NA	NA
Cl	15	NA	NA	NA
NO_3	228	NA	NA	NA
SO_4	30	NA	NA	NA
PCB	4	<1	>4000	>500

[a]Column parameters: flow rate of influent = 0.5 cm^3/min, Column volume = 3 cm^3, and residence time = 6 min.

[b]Number of column volumes of influent passed through column before DF falls below 100 for Cu, Cd, and U; 40 for Tc; and 4000 for PCB.

[c]NA = Not applicable. The column is virtually transparent to these ions during the run.

Table 7. Test results after passing influent through column 1C[a]

Species	Concentration in influent (ppm)	Average Conc. in effluent before breakthrough (ppb)	DF	Capacity[b] (column volumes)
Cu	10	10	1000	200
Cr	1	50	20	1100
Cd	1	100	10	<100
U	1	0.3	3000	700
Tc	0.0012	<0.025	>48	>500
Mg	30	NA[c]	NA	NA
Ca	50	NA	NA	NA
Na	6.5	NA	NA	NA
K	3.6	NA	NA	NA
Cl	15	NA	NA	NA
NO_3	228	NA	NA	NA
SO_4	30	NA	NA	NA
PCB	4	<1	>4000	>500

[a]Column parameters: flow rate of influent = 0.5 cm^3/min, Column volume = 3 cm^3, and residence time = 6 min.

[b]Number of column volumes of influent passed through column before DF falls below 100 for Cu and U; 40 for Tc, 20 for Cr and 4000 for PCB.

[c]NA = Not applicable. The column is virtually transparent to these ions during the run.

Table 8. Test results after passing influent through column 2D[a]

Species	Conc in influent (ppm)	Average Conc in effluent before breakthrough (ppb)	DF	Capacity[b] (column volumes)
Ba	10	0.2	50,000	800
Cd	1	<0.025	>40,000	900
Cu	10	6.7	1500	>1200
Zn	10	4.0	2500	800
Fe	2	30	65	>900
Mg	30	NA[c]	NA	NA
Ca	50	NA	NA	NA
Na	7	NA	NA	NA
K	2	NA	NA	NA
Cl	15	NA	NA	NA
NO_3	360	NA	NA	NA

[a]Column parameters: flow rate of influent = 1 cm^3/min, column volume = 6 cm^2, residence time = 6 min.

[b]Number of column volumes of influent passed through column before DF falls below 100 for Ba, Cd, Cu, and Zn; and before DF falls below 10 for Fe.

[c]NA = Not applicable. The column is virtually transparent to these ions during the run.

Table 9. Analytical data from integrated benchscale water decontamination system during first week of operation

Species	Concentration at sampling points[a] (μg/L)		
	Air Sparging Column and Column 1A		
	S1	S2	S3
Technetium-99	0.85	*b*	0.08
Uranium-238	1,163	*b*	0
Chromium	1,109	*b*	224
Copper	13,553	*b*	0
Iron	3,780	*b*	79
Cadmium	1,014	*b*	383
Calcium	75,000	*b*	64,000
Magnesium	39,000	*b*	46,000
Sodium	11,000	*b*	50,000
CCl_4	345	10.6	0.05
C_2Cl_4	730	18.2	0.1
CH_3CCl_3	1,720	323.5	0.1
CH_2CHCl	*b*	*b*	*b*
CH_2Cl_2	*b*	*b*	*b*
C_6H_6	1,980	22.2	0.02
$C_6H_5CH_3$	82,500	820	1.55
$C_6H(CH_3)_2$	57,500	1,465	0.6
PCB	700		0.4
	Column 1C		
	S4	S5	S6
Uranium-238	0	0	0
Chromium	396	7	4
Copper	5,468	29	0
Iron	147	115	105
Cadmium	1,067	1,076	1,095

Table 9 (continued)

Species	Concentration at sampling points[a] (μg/L)		
	Column 2D		
	S7	S8	S9
Copper	5	13	8
Iron	84	44	72
Cadmium	580	1	1

[a]See Fig. 3 for sampling point locations.
[b]Data not provided.

Table 10. Pilot plant operating data after 2 weeks of operation[a]

Column System	Sparger	1A	1C	1A	2D	2D
Size (gals)	3.5	6	4	3	6	6
Number of column volumes	4456.5	2599.6	3899.4	5199.2	1341.8	401.2

[a]See Fig. 4 for sampling point locations.

The concentration of the contaminant in the effluent from an ion-exchange column is a measure of the effectiveness of the media to trap (remove) the contaminant from the influent. The lower the concentration of the contaminant in the effluent (compared to its concentration in the influent) the more effective the column in treating the contaminated fluid.

The capacity of an ion-exchange column, on the other hand, is the measure of the volume of contaminated fluid that can be treated by the column before the media in the column becomes saturated with the contaminant, and the contaminant essentially flows through the column without being trapped. At this point, the contaminant is said to "breakthrough" the bed. The capacity of an ion-exchange column, therefore, is the volume of influent that is treated by the bed before it experiences breakthrough. This volume is often measured and reported in terms of the number of "column volumes" or CVs. The CV is the volume of fluid equal to the volume of the ion-exchange bed in the column. Therefore, the larger the number of column volumes processed by an ion-exchange column, the more effective the media in treating the contaminated fluid.

Most ion-exchange columns are arranged so that the fluid passes through them in series. When breakthrough occurs in the first column in the series, the contaminants are trapped in the second column. The first column is then removed from service, the second column becomes the lead column, and a fresh or regenerated column is added in series after the second column and the treatment operation is continued. The medium in the first column can either be regenerated or replaced with fresh medium and the column can be returned to service to continue treating the contaminated fluid.

With the above background, it can be seen from reviewing the results given in Tables 5 through 8 that the Durasil® ion-exchange media can readily remove the indicated contaminants from the surrogate mixed-waste contaminated water to below the required levels. In addition, these media appear to have high capacities for treating the contaminated water before experiencing breakthrough. The data in Tables 10 and 11 show that similar effective treatment results were also obtained in the pilot plant operation. Therefore, it appears that the Duratek process should be able to satisfactorily treat mixed-waste contaminated water similar to the surrogate groundwater composition.

If the concentrations of the nontoxic ions in the treated water after the Durasil® columns are higher than acceptable values, the effluent from the columns can be passed through a reverse osmosis unit to reduce the concentrations of these ions. In addition, the Duratek process is deliberately designed to separate the radioactive components in the secondary wastes from the hazardous/toxic species by using specially tailored Durasil® media. This separation greatly reduces the problems associated with the disposal of mixed radioactive and hazardous wastes.

Table 11. Analytical data from the pilot plant after 2 weeks of operation

Species	Concentrations at Sampling Points[a] (μg/L)						
	V1	V2	V6	V7	V8	V10	V11
INORGANICS							
Barium	47	48	46	45	48	0	0
Cadmium	1,081	967	815	824	873	0	0
Calcium[b]	75	70	90	92	162	181	111
Chromium	662	576	5	0	10	2	1
Copper	6,260	5,850	6,751	734	1,326	0	0
Iron	0	0	0	0	239	109	82
Magnesium[b]	50	47	48	49	193	202	123
Manganese	0	0	6	6	9	0	0
Potassium	c	c	c	c	c	c	c
Sodium[b]	13	13	36	41	6	6	6
Zinc	0	0	0	0	8	0	0
Technetium	0.4211	0.4860	0.0399				
Uranium	1,275	1,129	40	0	3	2	3
ORGANICS							
Carbon tetrachloride	1,210	22	0	c	c	c	c
Tetrachloroethylene	1,185	74	0	c	c	c	c
Trichloroethane	0	0	0	c	c	c	c
Vinyl chloride	c	c	c	c	c	c	c
Methylene chloride	c	c	c	c	c	c	c
Benzene	332	369	0	c	c	c	c
Toluene	43,510	1,894	0.082	c	c	c	c
Xylenes	31,725	2,575	0.058	c	c	c	c
PCB	c	c	c	c	c	c	c

[a]See Fig. 4 for sampling point locations.
[b]The data for calcium, magnesium, and sodium are in units of mg/L.
[c]Data not provided.

6. CONCLUSIONS AND RECOMMENDATIONS

Based on the results of the demonstration, the following conclusions can be drawn regarding the Duratek ion-exchange process:

- The process can remove the radioactive and the hazardous waste compounds in the water to below drinking water quality levels.
- The process is innovative in that it not only removes the mixed-wastes contaminants from the water but also separates them into a radioactive waste stream and a hazardous waste stream, which greatly facilitates ultimate disposal.
- The Durasil® ion-exchange media used in the process appear to have a high capacity for removing the contaminants from the water.
- The pilot plant operated without any major problems and demonstrated that the bench-scale data can be readily scaled up to larger operations. However, due to project funding and schedule constraints, the pilot plant operations had to be curtailed to meet the funding and schedule limitations. At shutdown of the pilot plant operations, there was no breakthrough of the contaminants through the ion-exchange media. Therefore, it was not possible to measure the ultimate removal capabilities of the ion-exchange media or to more closely estimate the life-cycle costs of the process.
- The process generates minimal secondary wastes. These wastes consist of spent activated carbon traps, spent charcoal-based media (containing the radioactive species) and spent glass-based media (containing the hazardous compounds). For example, these wastes can be further reduced in volume by incinerating the carbon-based wastes and

vitrifying the glass-based media. Vitrifying the spent glass-based media will effectively encapsulate the hazardous compounds from the environment.

- The process is simple, compact, and rugged. It requires minimal operator attention. The process equipment can be designed to be either skid-mounted or built as a mobile treatment unit so that, if necessary, it can be moved into the field to treat the contaminated groundwater close to the wellhead.

- The preliminary economics of the process appear to be fair. The cost estimates were developed based on limited pilot plant operations and seem to suggest that a full-scale process may be an economical means of treating mixed-waste contaminated water. However, it should be noted that because of liability concerns with the shipment of mixed wastes from DOE sites, the demonstration had to be conducted on surrogate waters tailored to reflect the actual contaminated groundwaters found on all the Energy Systems-managed DOE sites. Because of this restriction, the surrogate water composition was designed to reflect the worst-case compositions of the actual groundwaters found at the sites. In all probability, the actual contaminated groundwaters would very likely be a subset of the surrogate water composition and the Duratek process could be designed to readily and economically treat the actual contaminated groundwaters.

The following recommendations are made based on the above conculsions and the results of the demonstration:

- The Duratek process should be considered for the treatment of the contaminated waters found at the Energy Systems-managed DOE sites.
- To avoid the liability concerns associated with shipping mixed wastes from the DOE sites, a mobile unit based on the Duratek process should be built that can be taken

to the DOE sites and tested on the actual contaminated groundwaters. This testing will help establish the capabilities and the processing costs for the technology.

7. REFERENCES

1. J. G. Rogers, et al., *Oak Ridge Reservation Environmental Report for 1988, Volumes 1 and 2*, ES/ESH-8/V1 & V2, Martin Marietta Energy Systems, Inc., Oak Ridge, Tennessee, May 1989.

2. J. G. Rogers, T. G. Jett and M. R. Aaron, *Paducah Gaseous Diffusion Plant Site Environmental Report for 1988*, ES/ESH-8/V3, Martin Marietta Energy Systems, Inc., Oak Ridge, Tennessee, May 1989.

3. J. G. Rogers, et al., *Portsmouth Gaseous Diffusion Plant Site Environmental Report for 1988,* ES/ESH-8/V4, Martin Marietta Energy Systems, Inc., Oak Ridge, Tennessee, May 1989.

4. C. W. Kimbrough, Martin Marietta Energy Systems, Inc., Oak Ridge, Tennessee, personal communication to J. L. Kasten, Oak Ridge National Laboratory, Oak Ridge, Tennessee, July - August 1989.

5. U. S. Environmental Protection Agency, "National Drinking Water Regulations,"*40 Code of Federal Regulations*, Pts. 141-143 (July 1, 1991).

6. U. S. Environmental Protection Agency, "National Primary and Secondary Drinking Water Regulations," *Fed. Reg.* 54(97), 22062-22160 (May 22, 1989).

7. U. S. Environmental Protection Agency, "National Drinking Water Advisory Council; Open Meeting," *Fed. Reg.* 54(149) 32116-32117 (May 22, 1989).

8. S. J. Howard, Duratek Corporation, Columbia, Maryland, to S. P. N. Singh, Oak Ridge National Laboratory, Oak Ridge, Tennessee, March 27, 1991.

9. R. E. Sassoon, et al., *Demonstration of Ion-Exchange Technology for Treatment of Mixed Waste Contaminated Groundwater*, Vitreous State Laboratory of the Catholic University of America and Duratek Corporation, December 20, 1991. (See Appendix A).

APPENDIX A

Report by Duratek Corporation entitled "Demonstration of Ion-Exchange Technology for Treatment of Mixed Waste Contaminated Groundwater"

DURATEK

Demonstration of Ion-Exchange
Technology for Treatment of Mixed Waste
Contaminated Groundwater

Final Report

submitted to

Martin Marietta Energy Systems
Oak Ridge, TN

December 20, 1991

By

Richard E. Sassoon, Hamid Hojaji, Noel Balitactac,
Marek Brandys and Pedro B. Macedo

Vitreous State Laboratory
The Catholic University of America

Demonstration of Ion-Exchange

Technology for Treatment of Mixed

Waste Contaminated Groundwater

Final Report

December 20, 1991

By

Richard E. Sassoon, Hamid Hojaji, Noel Balitactac,
Marek Brandys and Pedro B. Macedo

Vitreous State Laboratory
The Catholic University of America
and the Duratek Corporation

Executive Summary

A groundwater decontamination system has been developed for processing mixed waste contaminated groundwater of a composition given by Martin Marietta Energy Systems. This composition represents the range of contaminants found in various groundwater wells at DOE sites managed by Martin Marietta Energy Systems, Inc.

A set of air stripping and novel Durasil® ion exchangers was selected and then tested individually for their abilities to remove the contaminants. The separate stages were then integrated into a single decontamination process which was demonstrated on a benchscale level with excellent results. The new ion exchangers were produced in larger quantities at the Duratek manufacturing facility and a pilot plant was operated with these materials. Similar results were found compared to the small-scale experiments demonstrating that the system may easily be scaled up.

The optimized process developed in this project is not only very successful in decontaminating the water but also in producing a small volume of waste material for disposal. This results in significant reduction in waste volume. For example, in the processing of one million gallons of mixed waste influent it is estimated that there will be about 25 cubic feet of charcoal-based and 57 cubic feet of glass-based spent ion exchangers loaded with toxic waste and around 33 cubic feet of charcoal-based material loaded with radioactive waste. All the toxic waste loaded material after further treatment will be in compliance with all EPA leaching requirements and can, for example, be encapsulated and used in the manufacture of ceramics. The radioactive waste loaded material can be incinerated, further reducing its volume by at least a factor of 10. In this way overall volume reductions of more than five orders of magnitude may be achieved yielding solely radioactive wastes.

TECHNICAL ABSTRACT

A system based on selective ion exchange was developed for removal of mixed waste contaminants from contaminated groundwater. Selective ion exchangers are materials that remove just the contaminant ions from the wastestream while allowing non-toxic ions at high concentrations such as Na^+, Mg^{2+}, Ca^{2+}, NO_3^- and SO_4^{2-} to pass through the system. Such materials therefore have much higher capacities and become more cost effective as compared to other ion exchange resins.

A mixed waste contaminated groundwater composition representative of the most contaminated mixture of ground waters found at 5 DOE sites managed by Martin Marietta Energy Systems was tested at both the bench scale and pilot scale level. This composition contained uranium and technetium as radionuclides, volatile organics, PCB's, chromate and toxic metal cations. The system tested was successful at removing all the contaminants to below their safe drinking water levels. The decontamination system consisted of the following stages:

(i) An air sparger which reduces levels of the volatile organics by over an order of magnitude;

(ii) "A" media which remove all the remaining organics including the PCB's, all the technetium and most of the uranium and chromate in solution;

(iii) "C" media which remove the remaining uranium and chromate from solution;

(iv) An additional "A" column which acts as a guard column to protect the last stage of the system;

(v) "D" media which remove all the toxic metal cations in solution.

The system operated with a residence time of 6 minutes for each column and at flow rates of 1 mL/minute in the benchscale system and 1 gpm in the pilot scale system. Over 20300 column volumes (CV's) of surrogate groundwater were passed through the benchscale system and over 6800 column volumes were passed through the pilot plant. Column capacities of over 5000 CV's for A media, over 20000 CV's for C media and around 2200 CV's for D media were determined.

The second part of this study covered the separation of the mixed radioactive and toxic waste which is collected on the A and C media. Passage of 1N HNO_3 through an A or C column stripped both the radioactive and toxic inorganic components that had been captured on the columns. The effluent of the stripping process was then passed through another selective ion exchanger labelled "H" which removed just the radioactives from the solution and allowed the toxic components to pass through. In this way elimination of any final mixed waste was achieved and the media may be regenerated.

Several areas still remain available for study in order to obtain more accurate cost estimates for the system. These include:

(a) continuation of operation of the pilot plant to determine the true capacities of the ion exchange media rather than lower limits;

(b) demonstration of the acid stripping process at the pilot scale level;

(c) determination of the number of regenerations of ion exchange media that may be performed;

(d) operation of a demonstration unit on actual groundwater.

Introduction

In this research project a novel technology involving ion exchange and air stripping columns was developed in order to clean a mixed waste contaminated groundwater. The composition of the surrogate groundwater required to be used in this project is shown in Table I. The table lists the expected concentration ranges of the major contaminants in the water together with their desired levels after treatment. The decontamination factors (DFs) listed represent the maximum decontamination factors to be achieved, that is the maximum factor by which the concentrations of the contaminants must be reduced before the groundwater may be returned to the environment. The two radioactive contaminants in the groundwater are low levels of technetium-99 and uranium-238 which have to be lowered by factors of 11 and 100 respectively. The toxic contaminants include both inorganic and organic species. The principal inorganic toxics are Ba, Cd, Cu, Cr and Zn while the organic toxics include small aromatic molecules and small chloro-substituted compounds.

While the required surrogate composition is not stable due to precipitation problems, the data from investigations described in this report demonstrate that removal of all these contaminants to the required levels can be achieved in the series of ion exchange columns suggested. This project was conducted in three phases, namely a laboratory scale phase which led to the selection of the optimum materials for ion exchange of the toxic and radioactive species in the groundwater; a benchscale phase which yielded capacities of the column materials, and finally a pilot plant phase in which it was demonstrated that the process could be upscaled.

Experimental Apparatus and Procedures

The final scheme chosen for treating the contaminated water is described in Figure 1. All the hazardous and radioactive inorganic components were added to one vessel and organics were mixed in afterwards to make up the desired composition of surrogate groundwater. This solution was then passed through an air sparger, in order to remove the majority of the volatile organic components, followed by a series of ion exchange columns labelled A, C, A and D in the diagram. Several of each type of column may have been required in series depending on the size and time of operation. A more detailed description of the benchscale and pilot plant apparatus is given below.

Benchscale System

The benchscale sized unit proposed and used in decontaminating the surrogate groundwater is shown in Figure 2. It consists of an influent mixing stage, in which the inorganic components of the influent are mixed with the organic components in an 8 liter mixing bottle, and a series of air bubbling and ion exchange columns. Peristaltic pumps are located at various points in the unit to ensure a constant flow rate of solution through the system.

Table I: Surrogate Water Composition

Species	Required Concentrations (mg/l)		DF
	Before Treatment	After Treatment	
Barium	10-100	1.0	100
Cadmium	0.1-1	0.01	100
Calcium	50	TBD	TBD
Chromium	0.1-1	0.05	20
Copper	10-100	1.0	100
Iron	2	0.3	7
Magnesium	30	TBD	TBD
Manganese	0.01	0.5	0.02
Potassium	2	TBD	TBD
Sodium	5	4.5	1.1
Zinc	10	5	2
Technetium-99	0.000059-0.00059	0.000053	11
Uranium-238	0.1-1	0.01	100

Table I (continued)

Species	Required Concentrations (mg/l)		DF
	Before Treatment	After Treatment	
Chloride	1	25	0.04
Nitrate	30-250	10	25
Sulfate	30	25	1.2
Carbon tetrachloride	0.01-5	0.005	1000
Tetrachloroethylene	0.01-5	0.005	1000
Trichloroethane	0.01-5	0.005	1000
Vinyl Chloride	0.01-2	0.002	1000
Methylene Chloride	0.01-2	0.002	1000
Benzene	0.01-5	0.005	1000
Toluene	20-100	2	50
Xylenes	50-100	10	10

Figure 1: Block Diagram of Demonstration Units of Mixed Waste Groundwater Decontamination System

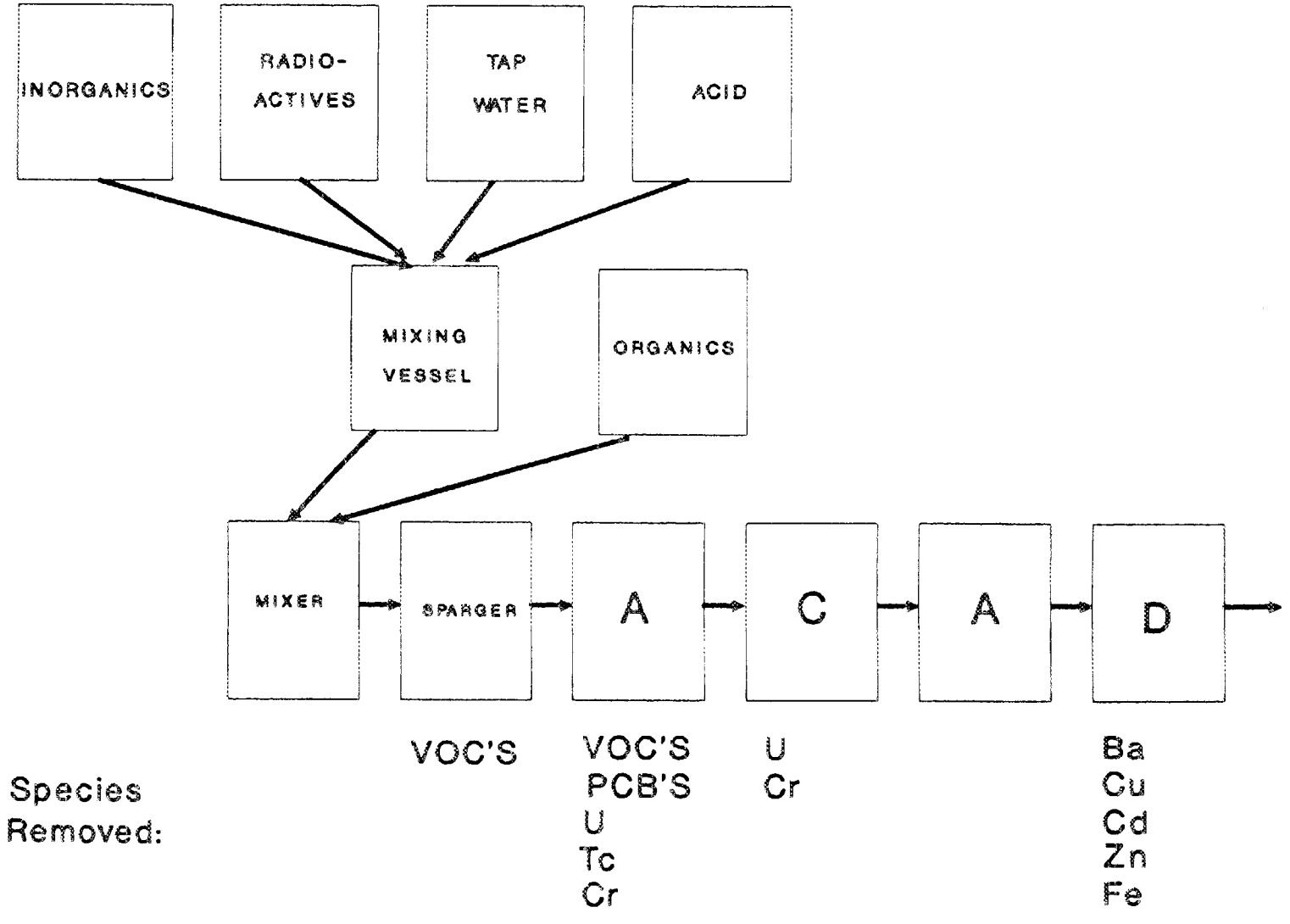

Fig. 2 Flow Diagram of Benchscale System for Decontamination of Mixed Waste Groundwater

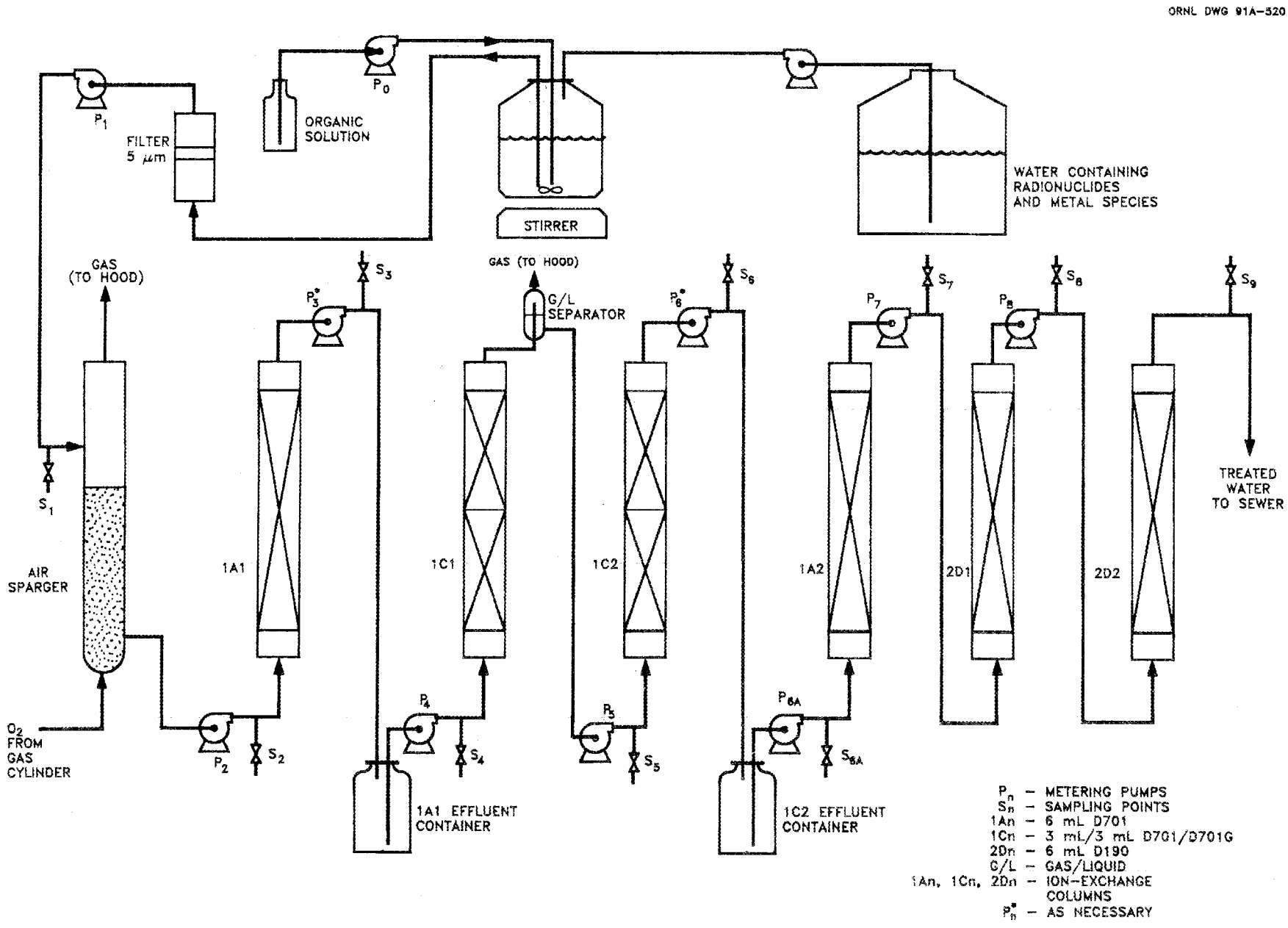

Sampling points are also placed at various positions in the system and these may be either simple valves, which are used to draw off samples for analysis of the inorganics, sealed glass vessels of 12 to 15 ml volume, which provide samples for analysis of the volatile organics, and large 2 liter glass flasks which collect samples for PCB analysis.

The inorganic components of the influent are prepared from 1000 ppm mother solutions. The organic mixture is made up by simply mixing the appropriate quantities of the individual organic components in a sealed bottle.

The air sparging column is made up of a glass cylinder filled with glass beads. Influent enters the column at an upper side inlet and exits the column from a lower side outlet tube. Air or oxygen is bubbled through a glass frit at the bottom of the column producing very fine bubbles which assist in the evaporation of much of the volatile organic content of the waste stream. The expelled gas is released from the top of the open column into a fume hood.

The ion exchange columns are prepared by placing the appropriate material in a glass tube. In later stages of operation of the benchscale unit up to two additional columns of A material were placed between $1A_1$ and $1C_1$ in the system. Solution is usually allowed to flow through the column against gravity such that any gas bubbles formed in the columns do not interfere with the flow of solution. A gas/liquid separator which allows release of any excess gas pressure to the atmosphere is also placed in the system.

All tubing in the system with the exception of that used to flow solution through columns 2D, is made from Viton due to its chemical resistance to the organic components in solution. At columns 2D no organics are expected to be present in solution and hence tygon tubing is used in this section. A 5 μm filter is placed in the system so that any undissolved solids in the influent do not enter and clog any of the columns.

Pilot Plant

A pilot plant was designed and operated at flow rates of around 1 gallon per minute for about 6 weeks. The design of the system is shown in Figure 3a and a view of its location is given in Figure 3b.

The inorganic influent is prepared in a 100 gallon mixing drum by flowing faucet water, concentrated solutions of the inorganic components and 0.2 M HNO_3 into the vessel. The faucet water passes through solenoid valves at a flow rate of between 1.2 and 2 gallons per minute. This flow is, however, frequently stopped by the water cut off solenoids when the volume of influent in the drum rises above around 80 gallons. The flow restarts when the volume of influent in the mixing drum falls below about 70 gallons. This is determined by high and low level sensor electrodes in the drum. The concentrated inorganic components are prepared weekly in 10 litre polypropylene containers as described in Table II. These mixtures were selected such that no precipitation would occur and the concentrations were chosen so that a

Fig. 3(a) Design of Pilot Plant

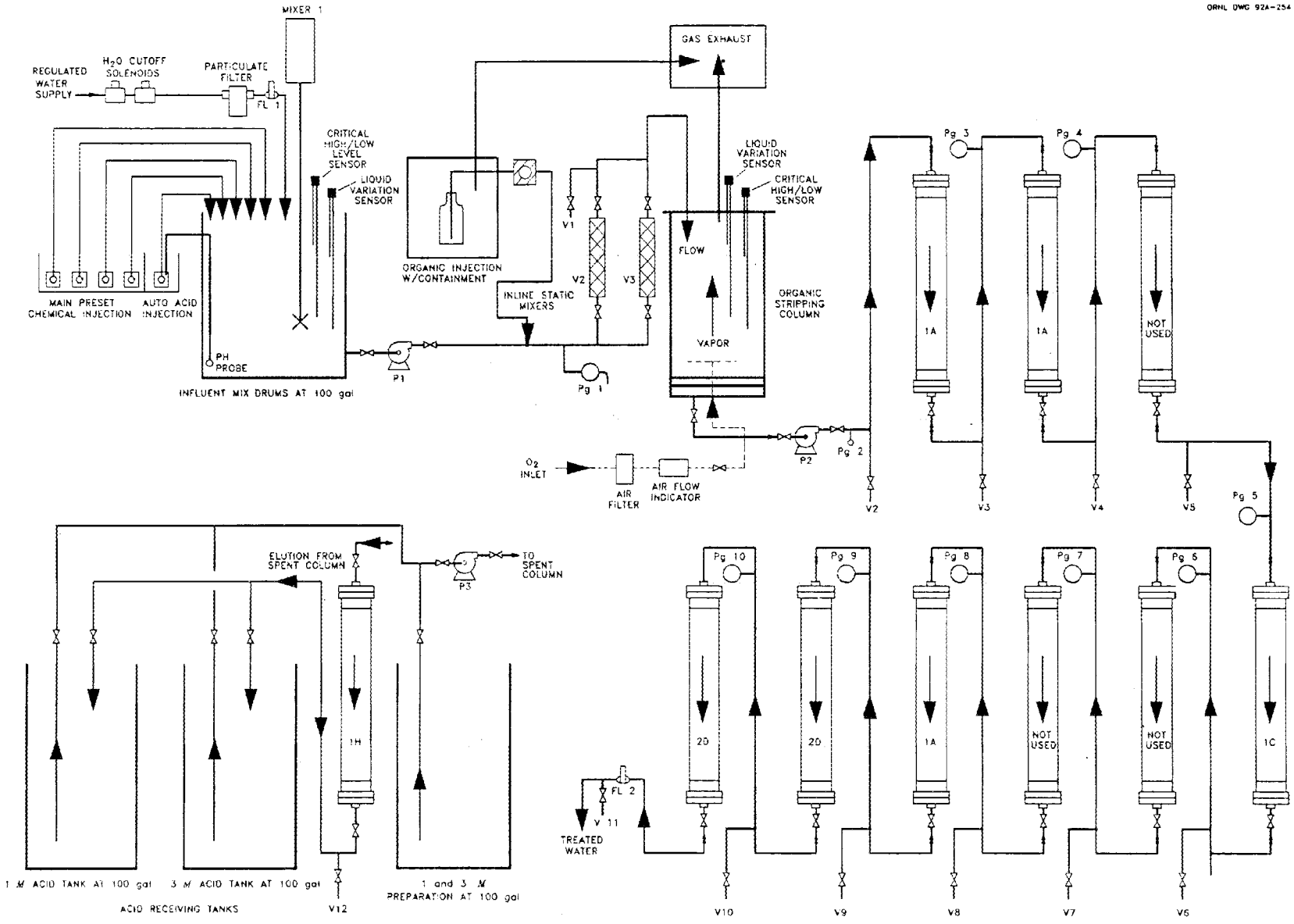

ORNL DWG 92A-253

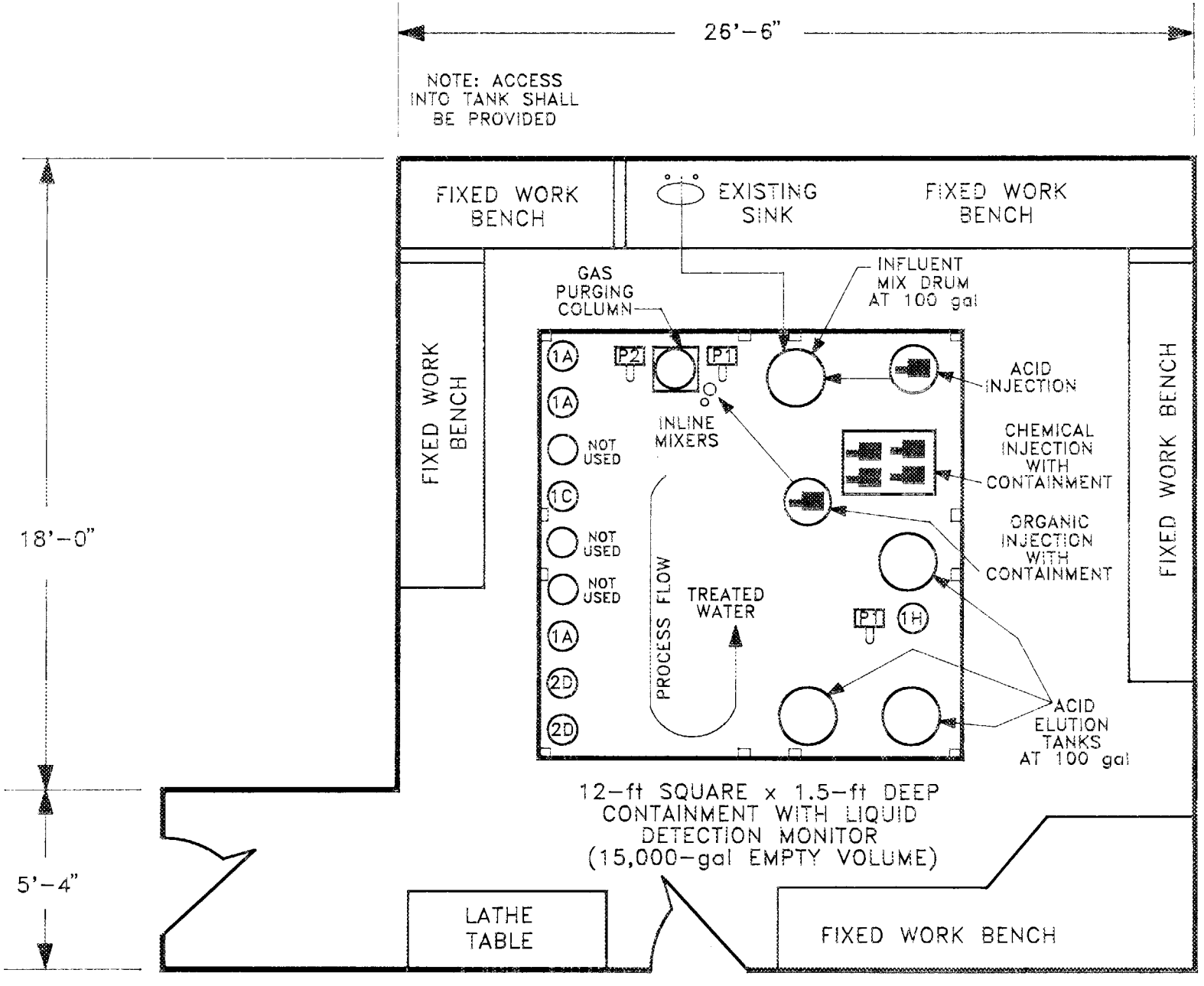

PILOT PLANT ROOM INTERIOR

continuous flow of 1 ml/min of each of these solutions into the mixing drum yields the required final concentration in the influent. The solutions are therefore flowed through Viton tubing at this rate using a peristaltic pump. A pH probe is also placed in the influent mixing drum in order to control the flow of a 0.2 M HNO_3 solution from a 55 gallon drum into the mixing drum such that the pH of the influent remains in the range 4.5 to 5.0. The influent is continuously mixed using a mechanical stirrer and is pumped out of the bottom of the drum using pump P1 at a flow rate of 1.1 gallons per minute.

A mixture of the organic components, prepared as shown in Table III, is also flowed at a rate of about 0.95 ml/min into the system using a peristaltic pump and the organics are allowed to mix with the rest of the influent by passage through either a 1/2" or 3/8" in line static mixer. The results of studies of preparation of the influent in laboratory scale experiments are described later in this report.

The influent is then allowed to flow through the top of an air sparger made from a 1 m high glass column with a stainless steel and teflon base. Air is passed into the column from an air compressor at a flow rate of typically 9 to 12 cubic feet per minute although replacement of the air compressor towards the end of the run allowed flow rates of only about 6 to 7 cubic feet per minute. The air enters the sparger through stainless steel piping with many holes of about 2 mm diameter drilled through it in order to increase the surface area of air exposed to the solution. .Level sensor electrodes are also placed in the air sparger in order to control the volume of water in the vessel to between 3 and 4 gallons. The solution is pumped out of the bottom of the air sparger by pump P2 at a flow rate of 0.8 to 1 gallon per minute which is always lower than the flow rate of water into the sparger. Thus pump P1 was designed to shut off when the level of solution in the sparger reaches the high level sensor and restarts when it falls below the low level sensor.

The influent is passed through a series of columns containing ion exchange media from top to bottom in order to reduce pressure build-up in the system. The design of a column is shown in Figure 4. The first 3 columns were made of stainless steel because of the need for resistance to attack by organics while the remaining columns were manufactured from PVC or transparent plastic. All the columns have a 6" internal diameter and a height of 6 feet. They are capped with flanges to which 3/4" piping is connected. Piping connecting the first three columns is made from stainless steel while PVC tubing is used in the remainder of the system. All the piping is joined to sampling points using "quick-connectors" which allow convenient by-passing of columns when required. Sampling points labelled V-1 through V-11 are placed before and after every column in the system.

Ion exchange media were placed into the columns to the required volume and backwashed with faucet water. Samples from the pilot plant were taken on an approximately daily basis by opening the valves at the sampling points, releasing a small volume of liquid into a radioactive waste container in order to clear the line and then collecting the appropriate volume in a vial. Samples for volatile organic analysis were collected in specially sealed vials, while all other samples were collected in regular vials.

Table II: Preparation of Concentrated Inorganic Solutions for the Pilot Plant System

Solution	Compound	Weight (g)	Solvent[a]
I	NH_4TcO_4	9.5 mls[b]	DI Water
II	K_2CrO_4	141.4	0.001 N HNO_3
III	$Mg(NO_3)_2 \cdot 6H_2O$ $UO_2(NO_3)_2 \cdot 6H_2O$	9782 79.8	0.001 N HNO_3
IV	$Cd(NO_3)_2 \cdot 4H_2O$ $Ca(NO_3)_2 \cdot 4H_2O$ $Cu(NO_3)_2 \cdot 3H_2O$	103.9 4749 1439	0.01 N HNO_3

[a] All solutions are made up in 10 liters of solvent

[b] Tc solution is made with a 0.04 mCi/cm^3 stock solution

Table III: Preparation of Organic Mixture for the Pilot Plant System[a]

Compound	Weight (g)	Volume (mls)
Carbon Tetrachloride	200	125.5
Tetrachloroethylene	200	123.3
Trichloroethane	200	149.4
Methylene Chloride	200	150.8
Benzene	200	228.2
Toluene	4000	4614
Xylenes	4000	4598
TOTAL	9000	9989

[a] Mixture is prepared weekly in a glass bottle

Fig. 4 Design of Columns for Pilot Plant

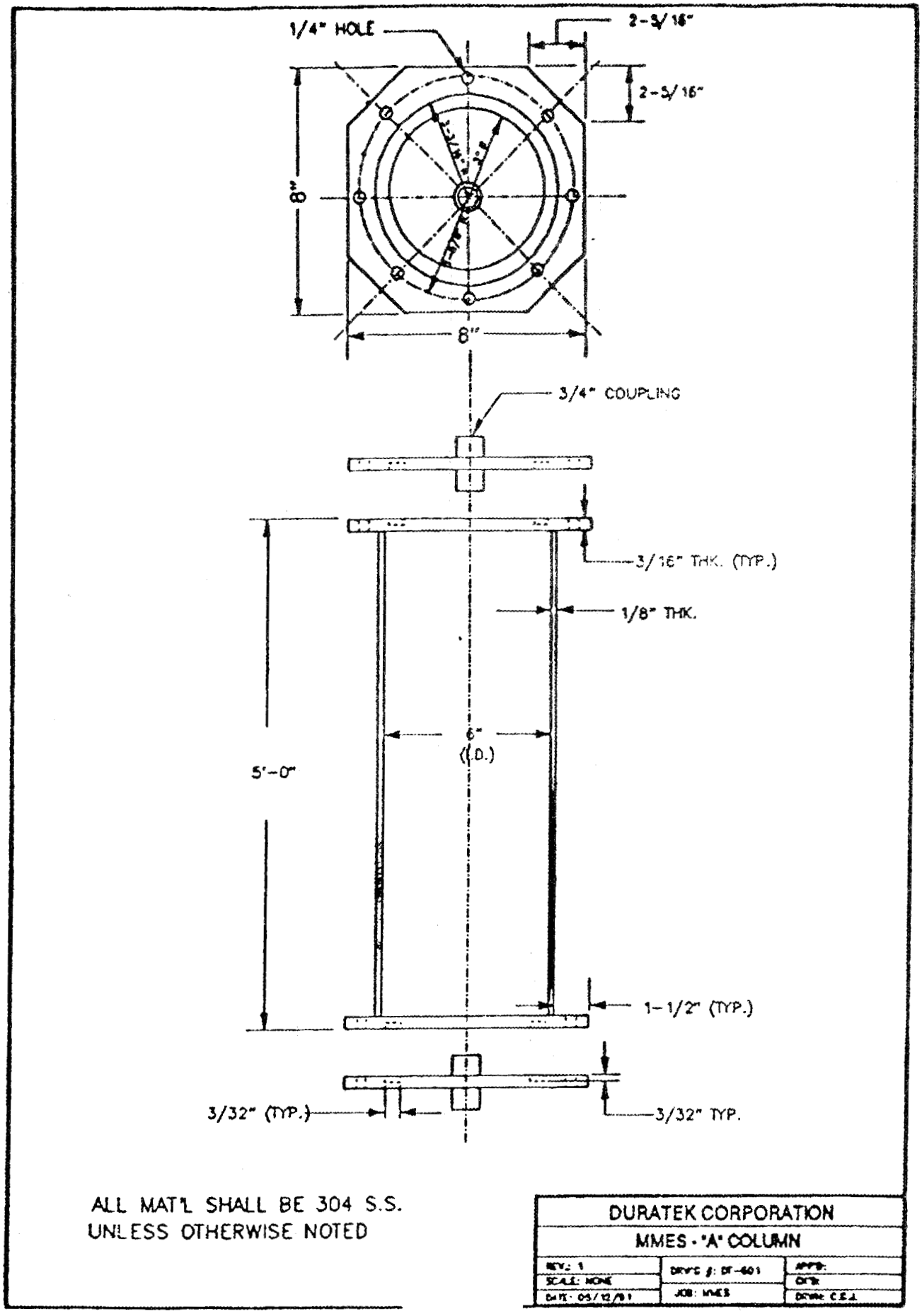

A system for stripping used columns was also built for the pilot plant although not used in this project. It consists of a series of 100 gallon tanks for storing acid and a similar PVC column for holding media to trap the stripped radioactive contaminants.

The complete pilot plant system is contained within a 12 foot square, 1½ foot deep containment area made from a wooden frame covered with 3 layers of tarpaulin in order to prevent any spillage into the rest of the laboratory. A liquid detection monitor is placed on the floor of the containment area, which shuts off the whole system in the event of major leakage. The total volume of the containment structure is 1500 gallons which is sufficient to hold more than one day's flow of water in the event of leakage.

Analytical Equipment and Procedures

Samples of effluent from the columns, which are taken at predetermined times either manually or using an automatic sampler, are analyzed using a variety of techniques. The inductively coupled plasma-mass spectrometry (ICP-MS) method is used for determining concentrations of inorganic components in solution, with detection limits as low as 10 parts per trillion for some elements. The DC plasma instrument is used for analyzing certain elements which cannot be monitored easily on the ICP-MS. These elements include Fe, K and Ca. The organic components in solution are monitored by the gas chromatography-mass spectrometry (GC-MS) technique. Data reduction of the collected analytical data is carried out in Lotus 1,2,3 spreadsheets which accompany this report.

Samples were prepared for ICP-MS analysis by dilution of the sample until the concentrations of all elements to be analyzed were less than 200 parts per billion, with the exception of sodium, magnesium and calcium. Dilution was made with 1% HNO_3 with the exception of certain samples from acid stripping experiments where deionized water was used as the dilution medium.

For every analysis run on the samples the response curve of the instruments (response in counts versus mass of isotope) was determined using a sample of 50 ppb of Li, Mn, In, Sr, Nd and U. The signals obtained in all regular samples for the elements of interest were then automatically corrected for the mass of the element. A blank sample made from 1% HNO_3 was added to every analysis run and all the samples in a run, including the blank sample, were spiked with 25 ppb In. The data for all samples is then corrected for sample to sample instrument variation according to the signal for In^{115}. All ICP-MS data given in this report are also blank corrected.

Analysis by ICP-MS of all elements except Tc is performed in a scanning mode in which the instrument scans a predetermined scan range and counts the number of ions of each mass in the range reaching the detector. Because of the low levels of Tc in solution and the high sensitivity required, Tc-99 was analyzed separately by operating the ICP-MS instrument in a single mass mode in which the detector counts only the ions of mass 99 arriving at the detector.

In the few cases in which the DCP instrument was used for analysis, the samples were diluted with 1% HNO_3 until the concentration of the element of interest was below several ppm. The samples were then analyzed together with a high and low standard and concentrations of the elements in samples were determined by a linear interpolation method.

The procedure for analysis of the organic components in the samples depended on their volatility. Volatile organic compounds which included all the organic species investigated except for PCB's were analyzed using a purge and trap technique with on-column injection according to EPA method #524.2[1]. An appropriate volume of the sample is diluted to 5 ml with deionized water and 50 μg of 1,4 dichlorobutane is added as an internal standard. This solution is purged with helium gas for 11 minutes and trapped in a Tekmar trap at room temperature. The trap is then heated to 180°C for 1 minute to allow desorption of the organic materials which enter the gas chromatograph. A Supelco PTE-5 fused silica capillary column of length 30 m with an internal diameter of 0.32 mm and a 0.25 μm film thickness is used. The column is initially held at a temperature of 30°C for 4 minutes and is then heated at a rate of 8°C per minute to a temperature of 160°C where it remains for 5 minutes.

The PCB's in the samples were analyzed using a splitless injection technique following liquid-solid extraction according to EPA method #525[2]. 200 ng of anthracene-d_{10} is added to between 5 and 500 mls of the analytical samples as an internal standard and solid phase extraction of the PCB is performed in Supelco ENVI-18 tubes contain 1 g of material. The solid is then dried with argon, extracted into 2 mls of methylene chloride, which is then evaporated to 20 μl and 2 μl of this solution is injected into the same gas chromatographic column used for the volatile organic components. The injector temperature is 250°C and the initial column temperature is 80°C which is held for 1 minute. The column is then heated at 10°C/min to a temperature of 280°C and it finally remains at that temperature for 4 minutes.

For both volatile organics and PCB's, standard response curves were prepared for each compound of interest by measuring their responses at 3 standard concentrations. Actual concentrations of compounds in samples are then determined from these curves.

Test Plan

The plan of experiments to be performed in this project could be divided into three parts:

(i) Study of the individual stages in any complete groundwater decontamination scheme. Figure 5 shows how the complete benchscale scheme was separated into the following stages:

I. Influent preparation
II. Air sparger to remove volatile organics
III. Column $1A_1$ to polish the water from organics and to remove Tc

IV. Columns $1C_1$ and $1C_2$ to remove U and CrO_4^-, and to act as a backup for Column $1A_1$

V. Column $1A_2$ to act as a backup column to ensure that no radioactive or organic materials pass into the final stage of the system

VI. Columns $2D_1$ and $2D_2$ to remove the remaining inorganic toxics from the contaminated influent

12 test runs were carried out in this project including the integrated benchscale and pilot scale runs in order to characterize the optimum performance of the decontamination scheme. Statistical optimization of the system was performed by sometimes carrying out repetitive runs on columns, and by determining the certainty of the results from the known detection limits of the species under investigation.

(ii) Construction and investigation of an integrated benchscale sized decontamination system in order to check that all the individual columns will perform well when connected in series. One run of the complete system was made which lasted for about 100 days. The system ran essentially continually at a rate of 1 ml/min except when routine maintenance, such as replacement of columns, took place. Sampling occurred usually every weekday although samples were sometimes taken more frequently especially at the beginning of the demonstration and less frequently towards the end of the run. Each sample was 15 ml and the first samples in the set up were removed in specially sealed vials such that no volatile organics would escape. 500 ml samples for PCB analysis were taken from the appropriate effluent container in the system. The experimental parameters of the run are given in the Experimental Results section of this report.

(iii) Construction and operation of a pilot plant system in order to demonstrate that the decontamination process can also operate in a large scale unit. Again one run of the pilot plant was made at a flow rate of 0.8 to 1 gallon per minute until around 40,000 gallons of wastewater had passed through the system. Sampling usually occurred once every weekday although additional samples were taken on some weekends. Sample sizes were the same as in the benchscale unit except for those required for PCB analysis when a 1 litre sample bottle was filled for samples with low concentrations of PCB's expected.

(iv) Study of methods to eliminate the mixed waste produced as spent ion exchange media in order to make their disposal more economically viable. This was performed on columns already used to study an individual stage of the decontamination process or in the benchscale run of the integrated system. Since the capacities of the columns were found to be so high no appropriate spent columns were available for study at the end of the pilot plant run.

Typically in this project the ICP-MS was set to yield data for inorganic elements with detection limits of around 1 ppb after the sample was diluted. The accuracy of the data is around

± 15-20%. In the case of Tc the ICP-MS was run in a special mode that gave values with detection limits of 5-10 ppt. The organic analysis is run with a detection limit of about 1 ppb and the results are accurate to within about 20%. Since the column capabilities are determined by the logarithms of large decontamination factors, as can be seen in many of the Figures in this report, errors in analytical data yield considerably lower errors in the column characteristics. Quality assurance samples were run on the ICP-MS instrument approximately every week depending on sample quantity in order to ensure consistency in the analytical data over time. The samples contained 10 ppm each of Na, Mg and Ca and 100 ppb each of Cr, Ba and U. The sample results are given with the other analytical data presented in the next section.

Many measurements of Na, Mg, Cu are in a non-linear range of the ICP-MS and should therefore not be treated as quantitative data.

Experimental Results

Most of the experimental results obtained from testing the decontamination scheme developed in this work are analytical data. Over 15,000 data points were collected during this project and are presented with this report. All the data were blank corrected and concentration values were calculated by comparison with appropriate standards. The analytical data on quality assurance samples run on the ICP-MS during this project are summarized in Table IV for the 22 samples run. It is clear that the average measured concentrations of the elements in the quality control samples all fall within less than 10% of their actual concentrations with the exception of magnesium which is 13% different and uranium which is 28% different. The average relative standard deviation of the data for all the elements in these samples is around 19%.

The results for all the different sections of the test plan are described below.

A. Individual Stages of the Process

I. Preparation of Influent

Several difficulties have to be overcome in mixing all the components of surrogate groundwater. These include the slow dissolution of organics in the water mixture which can lead to their volatilization before they are completely dissolved in solution and precipitation of several of the inorganic components on mixing together. For example $BaCrO_4$, $BaSO_4$ and $ZnCrO_4$ are all insoluble in water as are many iron salts at the pH levels desired ($4 < pH < 7$).

The problem of dissolution of inorganics was overcome by preparing two influent solutions. One influent solution was prepared for testing columns 1A, 1C and the integrated

system while a second influent containing Ba, Zn and Fe but no sulfate or chromate was used for testing column 2D which was especially chosen to pick up these and other metal cations. In the preparation of the first influent faucet water was used to make up the solution since this is the aqueous medium to be used in the pilot plant. The actual concentrations of inorganic and

Table IV: Summary of Analytical Data from Quality Control Samples Run on the ICP-MS

Element	Actual Concentration (mg/l)	Average of Measured Concentrations (mg/l)	Standard Deviation of Measured Concentrations (mg/l)	Relative Standard Deviation (RSD) (%)
Barium	0.1	0.094	0.010	11.1
Chromium	0.1	0.098	0.017	17.1
Uranium	0.1	0.128	0.033	25.7
Calcium	10	10.0	2.4	23.9
Magnesium	10	11.3	2.0	17.6
Sodium	10	9.6	1.6	16.6
			Average RSD (%) = 18.7	

organic components present in the final composition of this influent are given in Table V. Where possible the maximum desired concentrations of the components were added to the solution with the exception, of course, of those components, Ba, Zn and Fe, which would produce precipitation. The levels of some non-toxic components were somewhat above the maximum expected levels in the groundwater (for example Na and Cl) due to the constraint of using faucet water to make up the solution. However these concentration differences would not be expected to affect the performance of the decontamination system. The pH of the influent was adjusted to 5.5 by addition of about 140 mls of 0.1 M HNO_3. This prevents any slight precipitation of $CuCrO_4$ and is also in the optimum pH range for operation of the ion exchange columns 1A and 1C ($4 < pH < 6$). Nitric acid was used to acidify the influent rather than sulfuric acid because of the higher solubilities of nitrates as compared to sulfates. Hydrochloric acid was rejected as the acidifying medium because of concerns regarding chloride corrosion of stainless steel parts in the system.

Several methods were attempted to mix the organic components into the influent. A neat mixture of all the organic compounds was prepared in the ratio of their maximum desired values in the surrogate groundwater. Vinyl chloride could not be added to this mixture because it is a gas. Simple injection of a small portion of this mixture into the influent led to rapid evaporation of these components before they could dissolve. Attempts were then made to bubble air through the mixture and then let the air saturated with organic vapor pass through the influent. Dissolution of the organics in solution was achieved but it was found to be very difficult to control and maintain their levels in solution. The most successful method of adding the organic components was found to be very slow pumping of the organic mixture into a sealed mixing bottle containing the remaining components of the influent. Continuous stirring of this mixture in this flow system was found to yield good dissolution of the organics in solution as shown by the levels given in Table V. A diagram of this system is shown in section I of Figure 5. Under the typical experimental conditions 0.3 ml/day of the organic mixture and 1440 ml/day of the inorganic components are passed into and out of an 8 liter mixing bottle.

The composition of the influent used to test column 2D is shown in Table VI. Since all the organic and radioactive components are expected to be removed from the influent by the air stripping column and columns 1A and 1C, this solution contains all the other major inorganic toxic components at approximately their maximum levels expected in the groundwater. This solution was made up from deionized water and no sulfate was added to the solution so that metal cations such as Ba, Zn and Fe could be added to the influent and tested in column 2D.

II. Air Stripping Column

The ability of the air stripping column to reduce the levels of organic toxics in the influent was tested under various conditions in conjunction with column 1A which served as a polishing column to remove the final traces of organics to below their acceptable levels. Four test runs each under different experimental conditions were made on this system and the data

Table V: Preparation of Influent

Species	Concentration (mg/l)			
	Desired Surrogate Water		Tap Water	Actual Water
Inorganics	Min	Max		
Barium	10	100	0.032	0.032
Cadmium	0.1	1		1
Calcium	50	50	28.7	50
Chromium	0.1	1	0.005	1
Copper	10	100	0.005	10
Iron	2	2	0.018	0.018
Magnesium	30	30	5.48	30
Manganese	0.01	0.01		0
Potassium	2	2		0
Sodium	5	5	6.57	6.57
Zinc	10	10	0	0
Technetium - 99	0.000059	0.00059		0.00059
Uranium - 238	0.1	1		1
Total +				
Chloride	1	1	15	15
Nitrate	30	250	10	228 +
Sulfate	30	30	30	30

Note: $BaCrO_4$, $BaSO_4$, $ZnCrO_4$, and iron salts are insoluble at desired levels.

Table V (continued)

Species	Concentration (mg/l)		
	Desired Surrogate Water		Actual Water
Organics	Min	Max	
Carbon tetrachloride	0.01	5	1.6
Tetrachloroethylene	0.01	5	0.2
Trichloroethane	0.01	5	0.4
Vinyl chloride	0.01	2	
Methylene chloride	0.01	2	(a)
Benzene	0.01	5	1.8
Toluene	20	100	70.6
Xylenes	50	100	41.7
PCB	1	1	0.7

(a) Concentration of methylene chloride cannot be determined since it could not be retained on the GC-MS column.

of Mixed Waste Groundwater Showing Individual Stages

ORNL DWG 92A-255

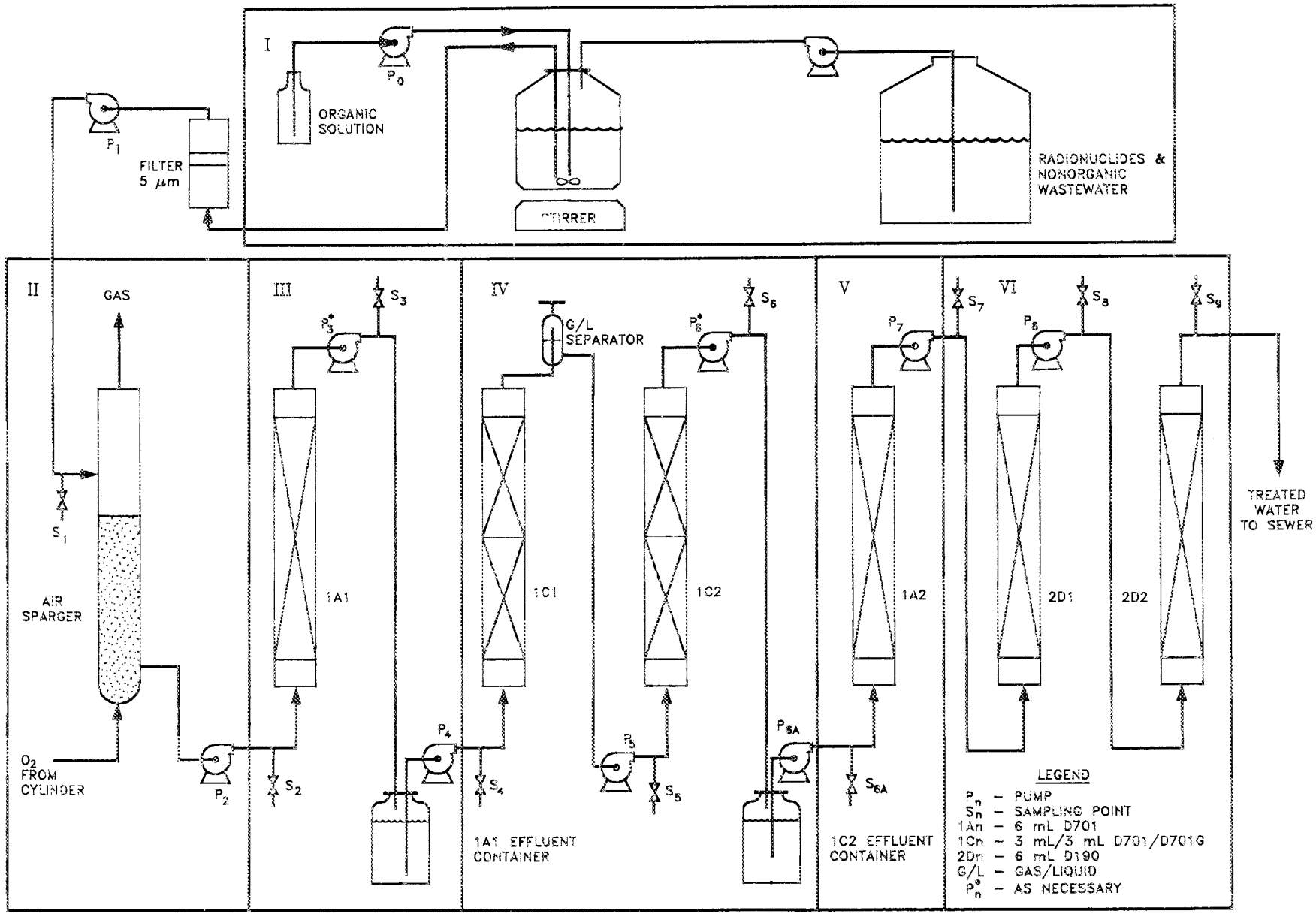

Table VI: Influent for Column 2D

Species	Concentration (mg/l)
Barium	10
Cadmium	1
Calcium	50
Chromium	0
Copper	10
Iron	2
Magnesium	30
Manganese	0
Potassium	2
Sodium	7
Zinc	10
Technetium-99	0
Uranium-238	0
Chloride	15
Nitrate	360
Sulfate	0

Influent is made up from deionized water.

from these experiments is shown in Table VII. Each test run was performed just once. The levels of organic components were determined at three points, namely, before the air stripping column, after the air stripping column but before column 1A, and after column 1A. The influent for these experiments was prepared by extracting the components of a neat organic mixture into an aqueous phase of deionized water in a separating funnel.

The principal experimental parameter which was varied was the ratio of flow rate of air to flow rate of influent. Its value was 938 in the experiment shown in Table VIIa, 189 in Table VIIb and 22 in Table VIIc. The level of influent in the air stripping column was also varied as may be observed on comparing the data from Table VIIc with the results in Table VIId. Increasing the level of influent in the air sparger by about 50% increases the DFs for all the species except carbon tetrachloride by less than 15%, which is close to the accuracy expected for the organic analytical data.

Passage of the influent through the air stripping column at the two highest flow rate of air to flow rate of influent ratios appear to give similar results. DFs of around 1000 are achieved for benzene, toluene and the xylenes, while the value is much larger for carbon tetrachloride and about an order of magnitude less for trichloroethane. Passage of the influent through column 1A is then very effective in polishing the solution yielding levels of the organics in the final effluent of below 1 ppb for all the components except trichloroethane which is just a little above this value. It should be noted however that the level of trichloroethane is an order of magnitude higher in the influent used in these experiments than that required in the groundwater and so the DFs for all the volatile organic components are clearly above those required using an air stripping column - column 1A set up under these conditions. At the lowest flow rate of air to flow rate of influent ratio used, the results presented in Table VII (c) demonstrate that decontamination factors of only about 10 to 60 are achieved using an air stripping column. The subsequent column 1A however also reduces the level of all the organics to below 1 ppb.

The optimum conditions for operating the air stripping column appear to be close to those given in Table VII in which the flow rate of air to flow rate of influent ratio is less than 200 and the height of influent bubbled is under 15 cm. Any increase in these values does not lead to any proportionate increase in the DF's and under these conditions around 99.5% of the volatile organics are removed from the waste stream thus prolonging the lifetime of column 1A.

III. and V. Column 1A

The ability of column 1A to remove volatile organics from the influent was described in the previous section, while its ability to remove PCB's and toxic and radioactive inorganics species is described here in experiments run until nearly 1600 column volumes of solution were passed through it. Table VIII describes data produced from an experiment in which influent is passed through column 1A with a residence time of 6 minutes. Figure 6 shows how the logarithm of the decontamination factor for the various ions varies with the number of column volumes of influent that pass through the column. It is clear that the column is excellent for

Table VII: Air Stripping Column / Column 1A

a) Column parameters

Air Stripper

flow rate of air (F_{air})	=	816 cm^3/min
flow rate of influent (F_{inf})	=	0.87 cm^3/min
F_{air} /F_{inf}	=	938
height of influent bubbled	=	16 cm

Column 1A

flow rate of influent	=	0.87 cm^3/min
column volume	=	6.0 cm^3
residence time	=	6.9 min

Species	Conc in influent (ppm)	Conc in effluent of air stripper (ppb)	DF air stripper	Conc in effluent of Col 1A (ppb)	DF 1A	DF Total
Carbon tetrachloride	1.5	< 1	> 1500	< 1		> 1500
Tetrachloroethylene	< 1			< 1		
Trichloroethane	45	330	136	1	330	45000
Methylene chloride						
Benzene	25	20	1250	< 1	> 20	> 25000
Toluene	100	120	833	< 1	> 120	> 100000
Xylenes	15	15	1000	< 1	> 15	> 15000

Note: Vinyl chloride, which is a gas was found to be too volatile to remain in solution as appears also to be the case for tetrachloroethylene. Only tentative analytical data could be obtained for methylene chloride suggesting values of its DF in the air stripper of around 3 orders of magnitude.

Table VII: Air Stripping Column / Column 1A (cont)

b) Column parameters

Air Stripper

flow rate of air (F_{air})	=	100 cm^3/min
flow rate of influent (F_{inf})	=	0.53 cm^3/min
F_{air} /F_{inf}	=	189
height of influent bubbled	=	13 cm

Column 1A

flow rate of influent	=	0.53 cm^3/min
column volume	=	6.0 cm^3
residence time	=	11.3 min

Species	Conc in influent (ppm)	Conc in effluent of air stripper (ppb)	DF air stripper	Conc in effluent of Col 1A (ppb)	DF 1A	DF Total
Carbon tetrachloride	5	< 1	> 5000	< 1		> 5000
Tetrachloroethylene	< 1	< 1		< 1		
Trichloroethane	75	1855	40	6	309	12500
Methylene chloride						
Benzene	75	65	1150	< 1	> 65	> 75000
Toluene	215	300	720	< 1	> 300	> 215000
Xylenes	70	40	1750	< 1	> 40	> 70000

Note: Vinyl chloride, which is a gas was found to be too volatile to remain in solution as appears also to be the case for tetrachloroethylene.

Table VII: Air Stripping Column / Column 1A (cont)

c) Column parameters

Air Stripper

flow rate of air (F_{air})	=	23.5 cm^3/min
flow rate of influent (F_{inf})	=	1.08 cm^3/min
F_{air} /F_{inf}	=	22
height of influent bubbled	=	17 cm

Column 1A

flow rate of influent	=	1.08 cm^3/min
column volume	=	6.0 cm^3
residence time	=	5.55 min

Species	Conc in influent (ppm)	Conc in effluent of air stripper (ppb)	DF air stripper	Conc in effluent of Col 1A (ppb)	DF 1A	DF Total
Carbon tetrachloride	0.5	25	20	<1	>25	>500
Tetrachloroethylene	<1	<1		<1		
Trichloroethane	75	3500	21	<1	>3500	>75000
Methylene chloride						
Benzene	60	5000	12	<1	>5000	>60000
Toluene	165	3000	55	<1	>3000	>165000
Xylenes	25	1500	17	<1	>1500	>25000

Note: Vinyl chloride, which is a gas was found to be too volatile to remain in solution as appears also to be the case for tetrachloroethylene.

Table VII: Air Stripping Column / Column 1A (cont)

d) Column parameters

Air Stripper

flow rate of air (F_{air})	=	23.5 cm^3/min
flow rate of influent (F_{inf})	=	1.08 cm^3/min
F_{air} /F_{inf}	=	22
height of influent bubbled	=	25 cm

Column 1A

flow rate of influent	=	1.08 cm^3/min
column volume	=	6.0 cm^3
residence time	=	5.55 min

Species	Conc in influent (ppm)	Conc in effluent of air stripper (ppb)	DF air stripper	Conc in effluent of Col 1A (ppb)	DF 1A	DF Total
Carbon tetrachloride	1	15	67	< 1	> 15	> 1000
Tetrachloroethylene	< 1	< 1		< 1		
Trichloroethane	80	3500	23	< 1	> 3500	> 80000
Methylene chloride						
Benzene	75	6000	12.5	< 1	> 6000	> 75000
Toluene	180	3000	60	< 1	> 3000	> 180000
Xylenes	30	1500	20	< 1	> 1500	> 30000

Note: Vinyl chloride, which is a gas was found to be too volatile to remain in solution as appears also to be the case for tetrachloroethylene.

Table VIII: Column 1A

Column parameters
flow rate of influent = 0.5 cm^3/min
column volume = 3 cm^3
residence time = 6 min

Species	Conc in Influent (ppm)	Average Conc in effluent before breakthrough (ppb)	DF	Capacity[1] (Column volumes)
Cu	10	2.5	4000	300
Cr	1	170	6	1100
Cd	1	10	100	50
U	1	0.25	4000	900
Tc	0.0012	<0.025	>48	>500
Mg	30	COLUMN IS VIRTUALLY TRANSPARENT TO THESE IONS DURING THE RUN		
Ca	50			
Na	6.5			
K	3.6			
Cl^-	15			
NO_3^-	228			
SO_4^-	30			
PCB	4	<1	>4000	>500

[1] Number of column volumes of influent passed through column before DF falls below 100 for Cu, Cd, and U, 5 for Cr, 40 for Tc and 4000 for PCB.

Fig. 6 DF's of Column 1A

ORNL DWG 92A-251

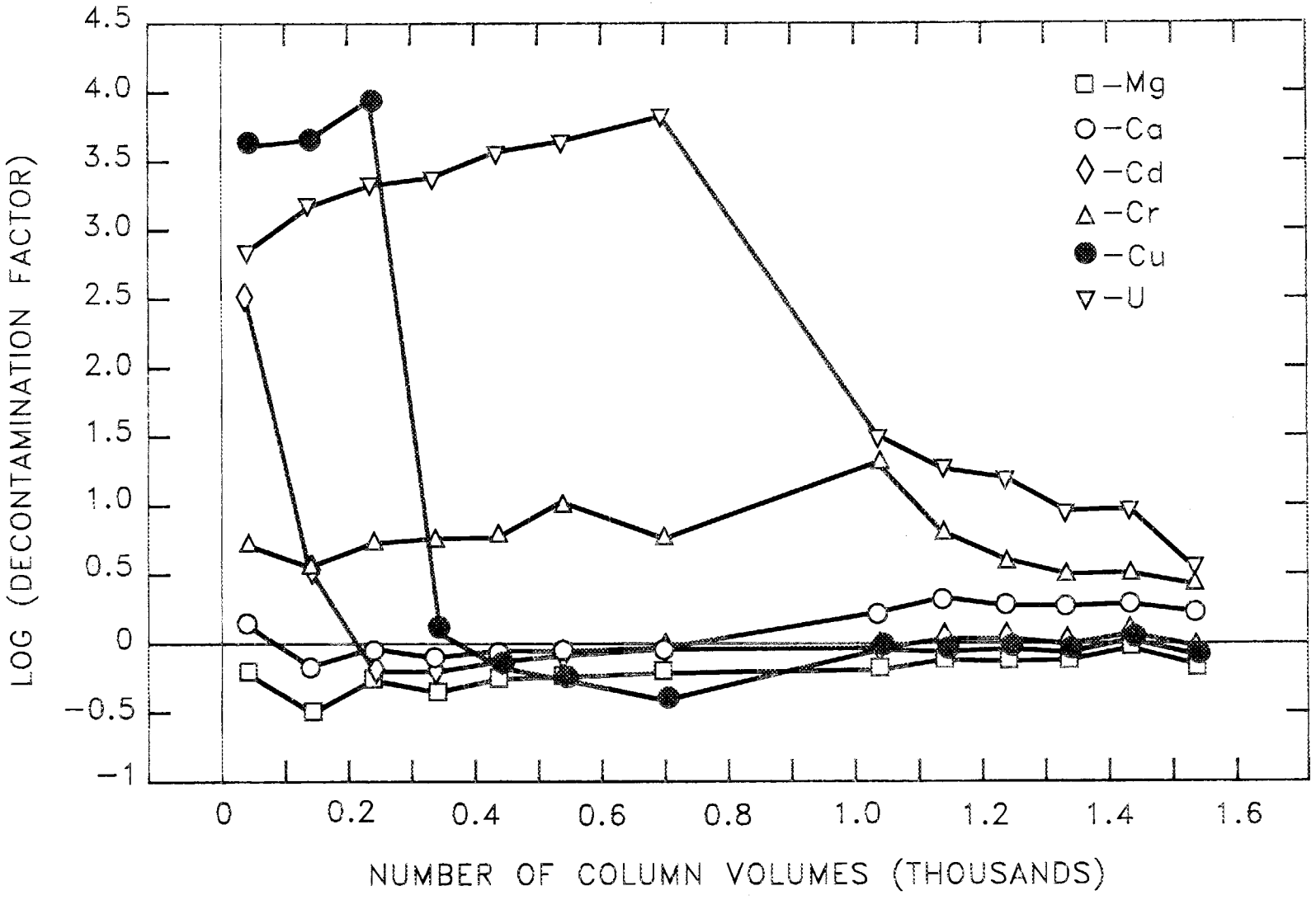

removing uranium for passage of at least the first 900 column volumes of influent and the Tc and PCB's are also picked up very well, indeed the effluent contains below the detection limits of our analytical instruments for these two species. While the column has a high capacity for chromium its DF is not sufficient to bring the chromium to below the required levels. Cu and Cd are only initially adsorbed by the column and eventually pass through the column together with the non-toxic anions and cations.

IV. Column 1C

This column is of similar nature to column 1A and was run with the same influent in a similar experiments to those performed on column 1A. The corresponding data from repetitive run #'s 2, 3, 4, and 5 given in Appendix A are summarized in Table IX and Figure 7. The results are quite similar to those for Column 1A with the notable exception that Cr is picked up with a higher DF in this column. Column 1C is a little inferior to column 1A in its ability to remove U but exhibits similar behavior to column 1A for removal of Tc and PCB's.

VI. Column 2D

Column 2D was tested together with a series of other possible ion exchange media, with an influent containing just a mixture of inorganic toxic and non-toxic materials. Column 2D was clearly the most successful material and the data are shown in Table X and Figures 8 and 9. Figure 8 shows data collected on the ICP-MS instrument, and analytical data collected on the DCP instrument is given in Figure 9 for some ions which cannot easily be monitored on the ICP-MS. Decontamination factors of over 1000 were achieved for all the major toxic elements tested, namely Ba, Cd, Cu, and Zn; and a value of 65 was obtained for Fe. The capacities of the column for these ions are over 800 column volumes and all the non-toxic inorganics pass almost directly through the column. Column 2D is therefore clearly an extremely successful candidate for effectively removing the inorganic toxic components of the groundwater.

B. Integrated Decontamination System

1. Benchscale Unit

A benchscale version of an integrated groundwater decontamination system was set up and operated based on the data obtained for the individual stages. The final set up of this unit is given in Figure 2. It consists of one air sparging column followed by six ion exchange columns. While the first air stripping column removes a very large fraction of the volatile organics it is not sufficient to remove the VOC's to the low levels required in this project and hence column $1A_1$ is placed after it in the system to polish them from solution and also remove the PCB's and Tc. Thus no Tc or organics are expected to pass beyond column $1A_1$. Columns $1C_1$ and $1C_2$ can remove the remaining uranium and chromate from the contaminated influent

Table IX: Column 1C

Column parameters
flow rate of influent = 0.5 cm^3/min
column volume = 3 cm^3
residence time = 6 min

Species	Conc in Influent (ppm)	Average Conc in effluent before breakthrough (ppb)	DF	Capacity[1] (Column volumes)
Cu	10	10	1000	200
Cr	1	50	20	1100
Cd	1	100	10	<100
U	1	0.3	3000	700
Tc	0.0012	<0.025	>48	>500
Mg	30	COLUMN IS VIRTUALLY TRANSPARENT TO THESE IONS DURING THE RUN		
Ca	50			
Na	6.5			
K	3.6			
Cl^-	15			
NO_3^-	228			
SO_4^-	30			
PCB	4	<1	>4000	>500

[1] Number of column volumes of influent passed through column before DF falls below 100 for Cu and U, 40 for Tc, 20 for Cr and 4000 for PCB.

Fig. 7 DF's of Column 1C

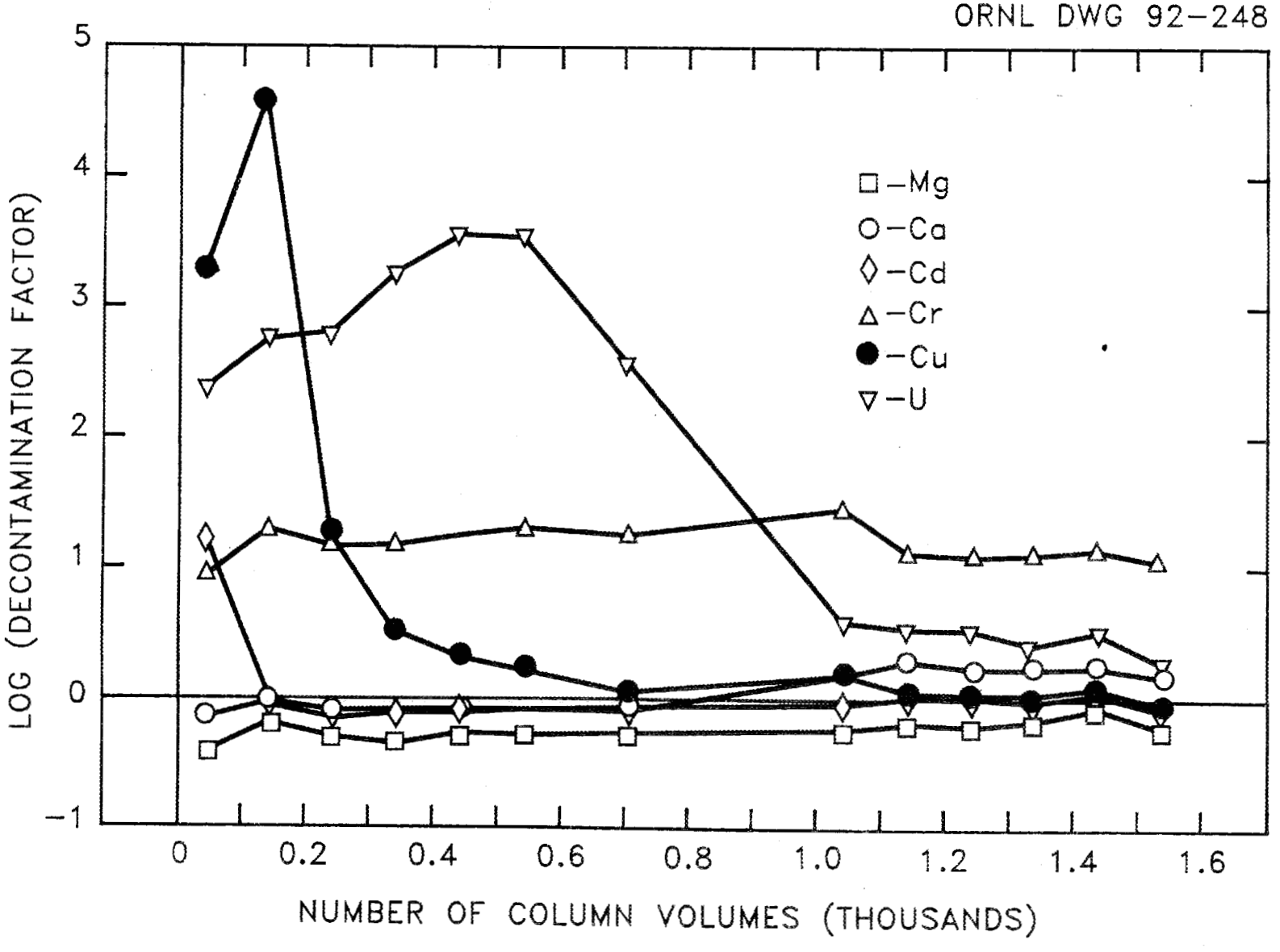

Table X: Column 2D

Column parameters
flow rate of influent = 1 cm^3/min
column volume = 6 cm^2
residence time = 6 min

Species	Conc in Influent (ppm)	Average Conc in effluent before breakthrough (ppb)	DF	Capacity[1] (Column volumes)
Ba	10	0.2	50000	800
Cd	1	<0.025	>40000	900
Cu	10	6.7	1500	>1200
Zn	10	4.0	2500	800
Fe	2	30	65	>900
Mg	30	COLUMN IS VIRTUALLY TRANSPARENT TO THESE IONS DURING THE RUN		
Ca	50			
Na	7			
K	2			
Cl^-	15			
NO_3^-	360			

[1] Number of column volumes of influent passed through column before DF falls below 100 for Ba, Cd, Cu, and Zn, and before DF falls below 10 for Fe.

Fig. 8 DF's of Column 2D - ICPMS

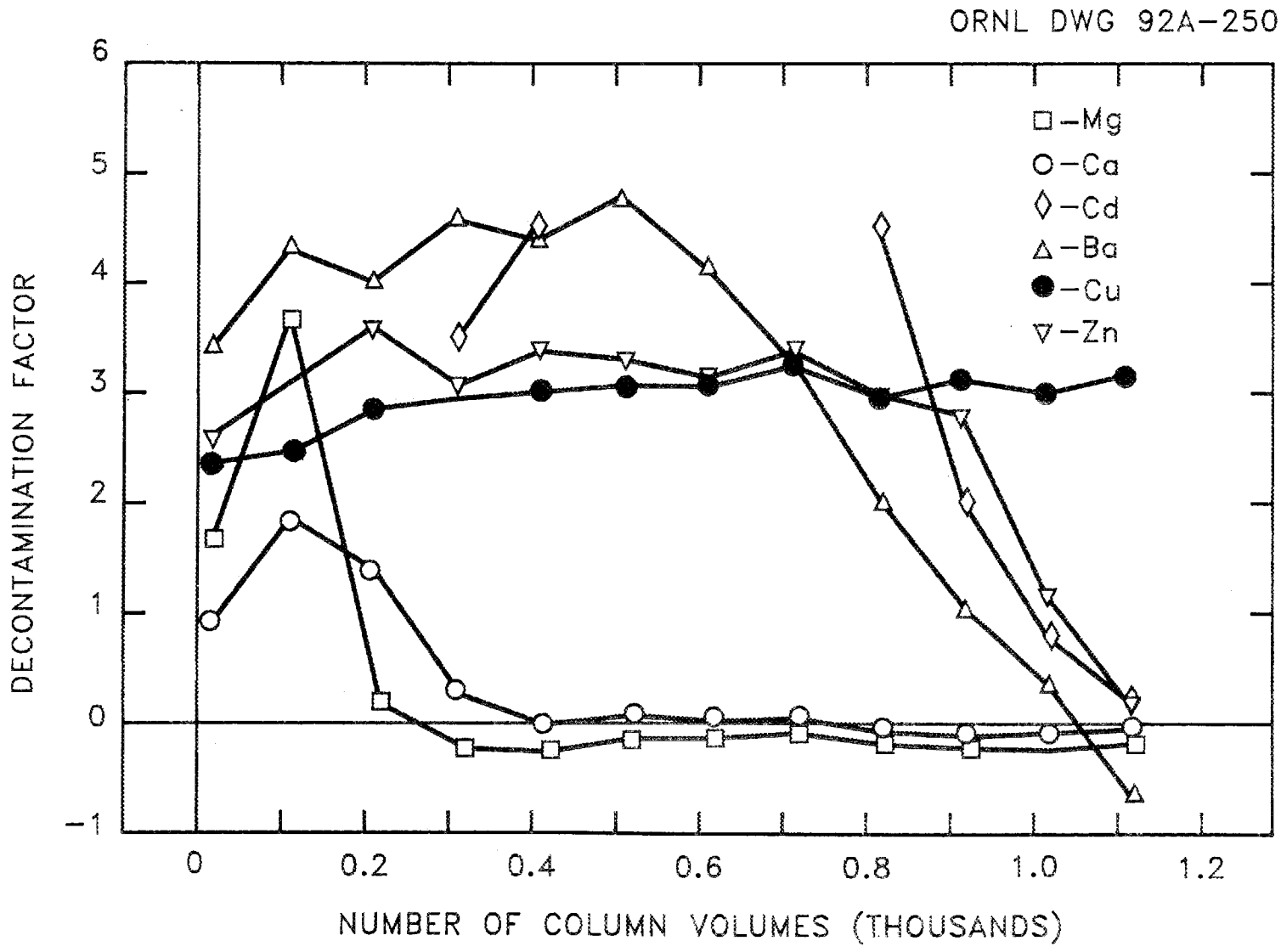

Fig. 9 DF's of Column 2D - DCP

ORNL DWG 92A-249

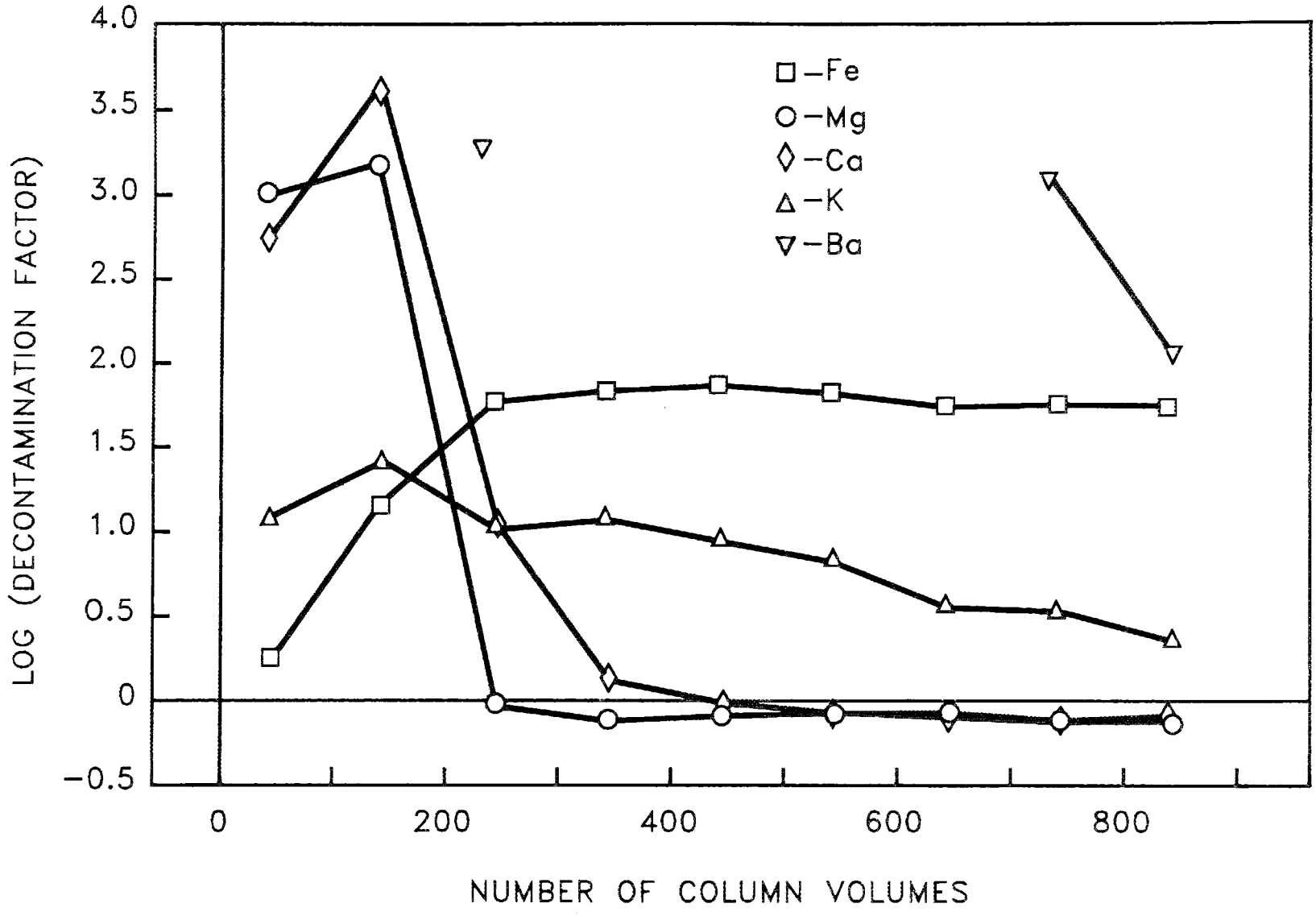

and may also pick up some quantities of other toxics such as Cu and Fe. Thus no more radioactive material is expected to be present in the solution beyond the 1C columns. As an insurance against leakage of either organics or radioactives beyond these columns, column $1A_2$ is placed in the system after the 1C columns. The two 2D columns placed at the end of the system can then remove all the remaining toxic inorganic cations. These include copper and iron, when they break through the earlier 1A and 1C columns, cadmium, and if they may be present in the groundwater, barium and zinc. While the benchscale system always included an air sparger, A columns, C columns, an A column and D columns in series they were continually being exchanged as they lost their ability to remove contaminants from the water and furthermore additional columns were sometimes introduced or removed in order to check various characteristics of the system. The typical operating parameters of this system are given in Table XI and provide a 6 minute residence time for passage of influent through each of the ion exchange columns. The sampling schedule in Table XII was planned although initially more samples were taken for analysis in order to ensure correct operation of the system.

Analytical data from the first week of operation of this system are given in Tables XIII (a), (b) and (c). In Table XIII (a) all the toxics and radioactives were checked before the air sparging column, after it and after column 1A. As expected the air sparging column substantially reduces the concentrations of volatile organics compounds in the water and they are all removed to concentrations below the target values by column 1A. After 1 week of operation column 1A essentially still removes all the technetium and uranium as well as PCB's, copper and most of the iron. A substantial fraction of chromium and cadmium pass through this column in accordance with previous data. The major non-toxic inorganics such as Na, Mg, Ca are also not collected by the column although fluctuations in their concentrations are observed when one majority ion replaced another during the run. Determination of the relatively high concentrations of these majority ions did not produce accurate data since they fall outside the optimum range of measurement by the ICP-MS. Data for Na, Ca and Mg should therefore only be considered as qualitative.

The behavior of column 1C is shown in Table XIII (b) where the concentrations of the remaining toxics and radioactives in the water before column $1C_1$, between column $1C_1$, and $1C_2$, and after column $1C_2$ are monitored. Again in accordance with the earlier data it may be observed that the chromium is picked up very well and the copper has also not yet broken through these columns. The cadmium level however essentially remains constant and is not affected by this column. The fluctuations in the cadmium levels given in Table XIII (b) fall within the error of measurement by the ICP-MS. The cadmium species are, however, removed from the water very efficiently by column 2D as may be seen in Table XIII (c).

The benchscale system continued to operate successfully for a period of nearly four months. The capacities of the columns in terms of column volumes of influent passed through the column are given in Table XIV for the A, C, and D ion exchange media. This information represents the whole column run except for the final 3 days when regenerated columns were placed in the system.

Table XI: Parameters of Benchscale Decontamination System

Flow Rate of Influent	=	1 ml/minute
Flow Rate of Organics into into Influent	=	0.3 ml/day (0.8 ml/hour for 2 minutes every 2 hours)
Flow Rate of Oxygen	=	100 ml/minute
Height of Liquid in Air Stripping Column	=	13.5 cm
Volume of Columns 1A, 1C, 2D	=	6 ml

Table XII: Sampling of Benchscale Decontamination System

Sampling Point	Sample Volume (mls)	Sampling Frequency	Analytical Technique
S_1	0.001, 1	Weekly	G-V, G-P
S_2	0.1, 1	Weekly	G-V, G-P
S_{2A}	2 x 15	Weekly	I-A, I-Tc
S_3	5	Daily	G-V
S_{3A}	2 x 15	Daily	I-A, I-Tc
S_{3B}	500	Weekly	G-P
S_4	5	if VOC's in S_3 > 1 ppb	G-V
S_{4A}	(1-2) x 15	Daily	I-A, I-Tc*
S_5	(1-2) x 15	Daily	I-A, I-Tc*
S_6	(1-2) x 15	Daily	I-A, I-Tc*
S_{6A}	500	if PCB's in S_{3B} >1 ppb	G-P
S_7	5	if VOC's in S_3 > 1 ppb	G-V
S_{7A}	15	Daily	I-A
S_8	15	Daily	I-A
S_9	15	Daily	I-A

G-V = GCMS (VOC), G-P = GCMS (PCB), I-A = ICPMS (all elems), I-Tc = ICPMS (Tc)

* Only run I-Tc if the Tc level in S_{3A} > 10 ppt

Table XIII: Analytical Data from Integrated Benchscale Water Decontamination System from First Week of Operation

a) Air Sparging Column and Column 1A			
Species	Concentration at Sampling Points (ug/liter)		
	S1	S2	S3
Technetium-99	0.58		0.08
Uranium-238	1163		0
Chromium	1109		224
Copper	13553		0
Iron	3780		79
Cadmium	1014		383
Calcium	75000		64000
Magnesium	39000		46000
Sodium	11000		50000
CCl_4	345	10.6	0.05
C_2Cl_4	730	18.2	0.1
CH_3CCl_3	1720	323.5	0.1
CH_2CHCl			
CH_2Cl_2			
C_6H_6	1980	22.2	0.02
$C_6H_5CH_3$	82500	820	1.55
$C_6H_4(CH_3)_2$	57500	1465	0.6
PCB	700		0.4

Table XIII: Analytical Data from Integrated Benchscale Water Decontamination System from First Week of Operation (cont.)

b) Column 1C			
Species	Concentrations at Sampling Points (ug/liter)		
	S4	S5	S6
Uranium-238	0	0	0
Chromium	396	7	4
Copper	5468	29	0
Iron	147	115	105
Cadmium	1067	1076	1095

Table XIII: Analytical Data from Integrated Benchscale Water Decontamination System from First Week of Operation (cont.)

c) Column 2D			
Species	Concentrations at Sampling Points (ug/liter)		
	S7	S8	S9
Copper	5	13	8
Iron	84	44	72
Cadmium	580	1	1

TABLE XIV: Column Capacities Determined from the Benchscale System

Column	# of column volumes of influent passed while column is in position		
	Backup	Front	Total
1A1		6615	6615
1A2*		19163	19163
1A3	2564	4204	6768
1A4*	4415	9829	14244
1A5*	10094		10094
1A6*	4060		4060
1C1*		20344	20344
1C2*	20344		20344
2D1		2643	2643
2D2	2643	2640	5283
2D3	2638	2900	5538
2D4	2900	1305	4205
2D5	1255	2022	3277
2D6	2037	1670	3707
2D7	1670	2401	4071
2D8	2348	3596	5955
2D9*	3596	445	4041
2D10*			445

All the A columns with the exception of the $1A_2$ column were placed at the front end of the series of ion exchange columns. Up to three 1A columns were placed in series in these positions. The first of the three columns removes the required contaminants from the influent while the second column acts as a backup. When the first column loses its ability to sufficiently remove the contaminants it may still remain in the system and be partially effective until its decontamination factors become close to 1. The second column in series continues to process the water and the first column is efficiently used up until it is fully loaded. In the case of the A media a third column was added in the latter part of the run since technetium breaks through the column before the organics and it was useful to also know the capacity of the column for organics since it may make the stripping of the columns more efficient.

Column $1A_1$ was initially placed at the front of the ion exchange system immediately after the air sparger and it remained in that position until Tc broke through the column after 6615 column volumes of influent passage when it was removed from the system. Columns $1A_3$ while placed initially in a backup position was also allowed to remain in the system until Tc broke through and was in the front position for passage of 4204 column volumes of influent. Thus an average lifetime for an A column can be estimated to be 5410 CV's based on Tc. Column $1A_4$ was placed at the front of the system after being in a backup position and was allowed to remain in the front position even after it was fully loaded with Tc. It remained in the front position until the end of the run yet it continued to efficiently polish the organics from the system. Thus the capacity of a 1A column for removal of organics remaining in the influent after air sparging is greater than 9800 column volumes.

The 1C columns and the $1A_2$ column placed after the 1C columns were found to be fully effective for the whole duration of the run and it is therefore clear that these columns can remain on line for at least 20,000 column volumes.

The 2D columns were located at the end of the ion exchange system and a pair of these columns was always in place with one acting as a backup for the other. When the DF of a toxic metal contaminant such as copper or cadmium fell close to 1 then the front column was removed, the backup column took its place and a fresh column replaced the previous backup column. Ten 2D columns were required for the whole run with columns $2D_9$ and $2D_{10}$ remaining at the end of the run. The average number of column volumes of influent that passed between exchanges of columns is determined from the data in Table XIV to be 2386 $\pm$ 734. The large standard deviation in this number is partly because some stripping solutions were added to the system during the run and is partly due to the fact that analysis was performed only five days a week and a lag time sometimes occurred between sampling and the decision to replace the column. This in no way affected the quality of the effluent of the system since a backup column was always in place, but a large time lag would extend the time a column in the front position would remain in the system and reduce the time a backup column would finally remain in the front position.

The data obtained from the integrated benchscale decontamination system clearly shows that the mixed waste contaminated influent is cleaned using this ion exchange technology. High

capacities of the columns have been achieved and scale up of this technology was checked in the pilot plant study discussed below.

2. Pilot Plant

The pilot plant described earlier was operated for a period of about 1½ months almost continually except for routine maintenance and when problems were encountered. Over 41,000 gallons of surrogate water were passed through the system and it not only was very successful at processing the wastestream but it also yielded experimental data in good agreement with results obtained from the benchscale studies. A similar series of air sparger, A, C, A and D columns to that in the benchscale study was set up although only either one or two columns of each type was in operation at any time.

Initially a flow rate of one half of a gallon per minute was used for passage of the influent into the system and this was gradually increased until the flowrate through the system was between 0.9 and 1.0 gallons per minute. The flow rate of faucet water into the influent mixing drum and the flowrate out of the drum into the air sparger were obviously kept higher so that the influent mixing drum and air sparger did not drain and cause the system to shut off. Careful manipulation of these flowrates was necessary since on several occasions the system shutoff because the level in the air sparger fell below a critically low level and in one instance the influent mixing drum overflowed since the flowrate of faucet water into the drum was too high and the solenoid valve controlling the flow failed. The optimum conditions for flow for this system was found to be 2.0-2.5 gpm for the faucet water flowing into the mixing tank, 1.1 gpm for the influent flowing into the sparger and 0.85-0.95 gpm for the flow of water from the sparger into the ion exchange system. The pressures at the individual columns were monitored daily. At the highest column load of six 6 cu ft columns and at a flow rate of about 0.9 gpm the maximum initial water pressure was 120 psi with a pressure drop of about 30 psi over each of the initial 1A columns, 22 psi over each of the subsequent 1C and 1A columns and about 8 psi over each of the 2D columns. A pressure sensor after the 1C column set to shut the system down if the pressure at that position surpassed 46 psi was never activated through out the whole run.

The flow of air into the sparger was initially held at the desirable level of 11-11.5 cfm but this had to be reduced to 9.5 cfm because of the heavy load on the compressor. For the last twelve days of the run a new compressor was used, however, it could only deliver air flowrates of 6.5 cfm. Although this led to less efficient removal of volatile organics from the system the first 1A column was found to be very effective at polishing the remaining compounds.

The flow rates of toxic inorganics, radioactives and organics were maintained at a steady 1 ml per minute. This was calculated to yield the required concentration of influent when the total flow rate of influent through the system is 1 gpm. Fluctuations in influent concentrations occurred because of changes in influent flow rate but these were monitored daily by sampling at point V1. The pH of the solution in the influent drum was set to 4.7 but varied between 4.5

and 5.0 because of the lack of sensitivity of the pH monitor. This pH is a little lower than that used in the benchscale set-up but was chosen to ensure that no precipitation occurred in the air sparger or elsewhere in the system. Indeed no precipitation was found to take place throughout the whole run of the pilot plant.

Samples for analysis were taken in plastic or glass vials at the appropriate sampling points between V1 and V11 on an approximately daily basis. A typical set of analytical data from the pilot plant taken about 2 weeks after the run began is presented in Table XV. The concentrations of samples at sampling points V1, V2, V6, V7, V8, V10 and V11 before and after the columns shown in the table are tabulated in units of μg/l for all species except Ca, Na and Mg which are in mg/l. The remaining sampling points were not in operation at this time during the run.

The measured concentration of the initial influent entering the sparger is given by V1. It was attempted to produce an initial influent with the same concentrations of toxic inorganics and radioactives as those given in Table II with the exception of copper which had a concentration of 5 mg/l. It was planned to place 5 ppm each of all the volatile organics except xylene and toluene which were set at 100 ppm. PCB's were not added to the influent because of their lack of availability but small amounts were added on one day of the run so that the effectiveness of the system to remove them could also be determined.

The actual concentration of influent did vary somewhat from day to day but typically the toxic inorganics and radioactives were within 30% of their desired values while the organics were often considerably lower. For example in the data given in Table XV the concentrations of organics measured in the influent of V1 are less than half the anticipated values. The data in Table XV correspond quite well with that given in Table XIII for analytical data from the benchscale system. The toxic metals including barium, cadmium and copper pass through the ion exchange series until they reach the 2D columns where they are very effectively picked up. Some copper also loads the 1A and 1C columns and in this example some loading of the 1C column is still taking place resulting in a DF of about 9 for Cu on this column. Technetium is very effectively picked up by the 1A, column and most of the uranium is also captured by the 1A, column but the 1C column is necessary to polish the levels remaining. The Cr in solution also requires a 1C column for polishing the levels remaining after passage through the $1A_1$ column.

The levels of organics in the influent were lower than anticipated probably since the static mixer in the pilot plant is less effective than the influent mixing bottle used in the benchscale system for mixing organics into solution. However in spite of this fact the data for the VOC's in Table XV for the pilot plant again correspond well with the data obtained from the benchscale system given in Table XIII. The air sparger reduces the concentrations of VOC's in the influent by factors of between 16 and 55 for the chloro substituted compounds and between 9 and 23 for

Table XV: Analytical Data from the Pilot Plant After Two Weeks of Operation

Column System	Sparger	$1A_1$	$1C_2$	$1A_4$	$2D_2$	$2D_3$
Size (gals)	3.5	6	4	3	6	6
# of CV's	4456.5	2599.6	3899.4	5199.2	1341.8	401.2

Species	Concentrations at Sampling Points (μg/liter except Ca, Na, Mg mg/liter)						
	V1	V2	V6	V7	V8	V10	V11
INORGANICS							
Barium	47	48	46	45	48	0	0
Cadmium	1081	967	815	824	873	0	0
Calcium	75	70	90	92	162	181	111
Chromium	662	576	5	0	10	2	1
Copper	6260	5850	6751	734	1326	0	0
Iron	0	0	0	0	239	109	82
Magnesium	50	47	48	49	193	202	123
Manganese	0	0	6	6	9	0	0
Potassium							
Sodium	13	13	36	41	6	6	6
Zinc	0	0	-0	-0	8	-0	-0
Technetium	0.4211	0.4860	-0.0399				
Uranium	1275	1129	40	0	3	2	3
ORGANICS							
Carbon Tetrachloride	1210	22	0				
Tetrachloroethylene	1185	74	0				
Trichloroethane	0	0	0				
Vinyl chloride							
Methylene chloride							
Benzene	3320	369	0				
Toluene	43510	1894	0.082				
Xylenes	31725	2575	0.058				
PCB							

the aromatics. These DF's are a little inferior to those obtained with the benchscale system but were probably due to limited air flowrate and geometry of the sparger. The subsequent 1A column is however very effective at polishing all the VOC's remaining after the air sparger yielding essentially undetectable levels of the VOC's.

A check of the ability of the system to remove PCB's was performed towards the end of the run of the pilot plant. Data from this experiment is presented in Table XVI. Two concentrations of PCB's were entered into the system and a run with each concentration was performed. In run A, 400 mg of the PCB mixture, 1248-Arochlor, was added to 100 mls of the volatile organic mixture and this was pumped into the system. This yields a concentration of PCB's of 1 ppm in the influent for a flow rate of organics of 1 ml/min and of influent of 1 gpm. In run B, 800 mg of the PCB mixture was added to 100 mls of the VOC mixture in order to yield a concentration of 2 ppm of PCB's in the influent. In each run the solution was allowed to flow for 1 hour before samples were taken and then analyzed. In the V1 samples only very low levels of PCB's were found, up to 200 times less than expected. This is attributed to poor dissolution of the PCB mixture into the aqueous solution by the static mixer. However, after passage through the air sparger considerably more of the material is dissolved, probably since the high air flow enhances the mixing of the solution. V3 samples taken after passage of the influent through the first 1A column show removal of over 85% of the PCB's in the run. The lack of ability of the 1A material to pick up PCB's in these experiments is probably related to the lack of dissolution of the PCB's in the influent. Concentrated pockets of non-dissolved PCB's may be present in the influent which only slowly dissolve as the solution passes through the system. This is demonstrated by the additional data given for later samples where the concentrations of V4 show an additional DF of between 3 and 4 after flow through a second 1A column. No PCB's are detected in the effluent of the system as demonstrated by the data for V11 and thus even in these experiments the system is shown to be capable of removing all the PCB's to below the required levels since the final traces to PCB's are removed by the 1C and 1A columns following the first two 1A columns.

The capacities of the columns in the pilot plant were determined from the flow of influent passed at the time of introduction, exchange and removal of columns from the system. The results in terms of column volumes of influent passed are given in Table XVII. Since the pilot plant was only operated for around 40,000 gallons of contaminated water, only values for the capacities of 2D columns could be calculated with any degree of certainty. The $1A_1$ column in the front position of the ion exchange system was effective for the entire duration of the run although on the very last day of operation, sample #43 shows that technetium was finally breaking through the column since a DF of only 2.3 was achieved for Tc. The $1A_2$ column only served as a backup for $1A_1$ and the $1A_5$ column located after the 1C column also remained at the end of operation. The $1A_4$ column was only of half size and was initially placed after the 1C column. It was replaced with $1A_5$ when additional 1A material became available.

$1C_2$ was initially placed in the system but when this was found to be ineffective it was replaced with a freshly prepared $1C_1$ column. This column remained in place until the end of the run and as expected from the benchscale results has a high capacity. The 2D columns were

Table XVI: Check of Decontamination of PCB's from Surrogate Groundwater in Pilot Plant

Run:	A	B
Sample	Concentration of PCB's (μg/l)	
V1	5	26
V2	319	529
V3	16	63
V4	4	21
V11	0	0

Table XVII: Column Capacities Determined from the Pilot Plant

Column	# of column volumes of influent passed while column is in position		
	Backup	Front	Total
$1A_1$*		6876	6876
$1A_2$*	4258		4258
$1A_4$		6954	6954
$1A_5$*		3399	3399
$1C_1$*		4258	4258
$1C_2$		4856	4856
$2D_1$		2148	2148
$2D_2$	941	1279	2219
$2D_3$	1279	2580	3858
$2D_4$*	1894	635	2529
$2D_5$*	635		635

* Column was still in operation at end of run.

replaced regularly and three 2D columns were spent by the end of the run and two other 2D columns remained on line. The average capacity of the loaded columns, based on the number of column volumes of influent passed while in the front position is 2002 $\pm$ 662 column volumes. This is in very good agreement with the benchscale value of 2386 $\pm$ 734 column volumes. Its slightly lower value may be as a result of the lower pH of the influent of 4.7 in the pilot plant as compared to the pH of 4.9 for the influent in the benchscale system.

The averaged values of the column capacities from the benchscale and pilot plant runs are presented in Table XVIII. With the exception of the 2D columns, the numbers derived from the pilot plant run are only lower limits. However, the value for the capacity of 1A for Tc is not very much larger than the lower limit given since the DF for Tc in the final sample is approaching one. Even in the benchscale experiment which continued for around 100 days only lower limits could be obtained for the 1A column for organics and the 1C column. In general, however, it appears that upscaling the system to pilot plant size leads to good agreement of the data with that from the benchscale studies.

A summary of the final loading of each of the major contaminants on each of the columns used in the pilot scale studies is given in Table XIX. The $1A_1$ column, being in the front position for the whole pilot run is loaded the most highly with Cr, Tc, U and organics. Indeed no other column was required to pick up Tc or organics. 0.1 g of Tc and 567.5 g of organics are loaded on the column together with some iron and copper. With the exception of Cu none of the other A columns were yet in a position to pick up species except for 4.5 g of Cr by $1A_2$. Cu was picked up by all the 1A columns and on checking the data with time for $1A_1$ it was found to have a maximal loading of Cu at sampling #14 when 10350 gallons had flowed through the system and 89.4 g of Cu was loaded on the column. The Cu is replaced with other species on the column as more influent passes through it and this will probably occur with other 1A columns when they are placed in the front position.

Since only Cu and other toxic metal cations passed through the 1C columns, only Cu is seen to be present on the loaded 1C columns of the pilot plant to any major degree. The spent 2D columns are loaded with all the remaining toxic metals at levels between 2 and 40 g for the species added to tap water in the influent. Due to the short time available for performing the pilot scale run only low loadings of Cu were found on the 2D columns since most of the Cu was adsorbed on the preceding 1A and 1C columns and had not yet broken through the 2D columns. Loadings of Cu on the 2D columns would therefore be expected to be much higher in later experiments where solutions from stripping of spent 1A and 1C columns are added back to the system and the characteristic blue color is seen on the column. The 2D columns were loaded with much higher levels of Cd and this determines their lifetime in these experiments. The loadings of both Cd and Cu appear to be much higher for columns $2D_2$ and $2D_4$ than for columns $2D_1$ and $2D_2$. This is because of the positioning of preceding fresh 1A and 1C columns during the run which become loaded with Cu especially and some Cd and therefore do not allow a constant flow of these elements to reach the 2D columns.

Table XVIII: Comparison of Column Capacities in the Benchscale and Pilot Plant Systems

Column	Replacement Frequency CV's	
	Benchscale	Pilot Plant
1A (Tc)	5410	>6876
1A (VOC)	>9829	>6876
1C	>20344	>4856
2D	2386	2002

Table XIX: Waste Loadings in g on Columns at End of Pilot Plant Run[a]

Column #	1A1*	1A2*	1A4	1A5*
Size (gals)	6	6	3	6
Barium	-0.86	0.58	0.01	-0.20
Cadmium	-1.49	-2.10	-0.52	-4.87
Chromium	117.87	4.47	-0.17	-0.02
Copper	12.56	75.71	12.61	46.55
Iron	5.23	-4.62	-9.64	2.25
Zinc	-4.11	1.73	-0.29	0.05
Technetium - 99	0.10008	0.00941	-0.00006	-0.00050
Uranium - 238	99.06	46.95	-0.02	0.10
Carbon tetrachloride	16.60	-0.12	0.00	0.00
Tetrachloroethylene	8.73	-0.10	0.00	0.00
Benzene	33.50	-0.05	0.00	0.00
Toluene	178.33	-0.61	0.00	0.00
Xylenes	330.34	-1.74	0.00	0.00

Table XIX (continued)

Column #	1C1*	1C2
Size (gals)	6	4
Barium	-0.16	0.14
Cadmium	1.83	2.28
Chromium	0.24	0.75
Copper	252.00	173.27
Iron	1.55	4.81
Zinc	2.24	0.27
Technetium - 99	0.00179	-0.00039
Uranium - 238	0.08	1.19

Column #	2D1	2D2	2D3	2D4*	2D5*
Size(gals)	6	6	6	6	6
Barium	2.31	1.19	1.41	1.51	0.00
Cadmium	11.22	42.19	15.47	40.43	0.01
Chromium	0.11	0.16	0.05	0.12	0.01
Copper	2.06	34.74	5.52	20.72	-0.00
Iron	4.21	3.99	2.89	2.46	0.52
Zinc	0.17	-1.59	-1.42	0.56	0.03

* Columns in operation at end of run

(a) Small negative values for waste loadings are insignificant and should be treated as zero. They represent cumulative errors from the ICP-MS determinations.

The values for loading of contaminants on the columns in the pilot run are therefore clearly affected by column changes in the system. They are also determined by the concentrations of majority ions in the influent such as Na, Mg and Ca although reliable data on these elements was not obtained in these experiments.

Mixed Waste Reduction Elimination Via Acid Stripping

The goal of this work is to decontaminate the groundwater and additionally separate the species in such a way that no mixed waste results from the process. Three sets of spent ion exchangers will be produced during the operation of the system and these are considered below. Since no totally spent 1A or 1C columns were produced from the pilot plant run all experiments leading to mixed waste elimination were performed on spent columns from the benchscale system. The schemes for stripping waste-loaded A and C columns are shown in Figure 10. Passage of nitric acid through the spent column removes the toxic inorganic and radioactive contaminants from the column. This solution may then be passed through an additional Dura-C column labelled "H" which selectively removes only the radionuclides from the acid stream. The effluent containing only toxics can be returned directly to the main decontamination system in the case of the A media or may be neutralized, passed through a stripped C column and then returned to the main decontamination system. In this way Cr is stored in spent C media while the other toxic cations in the acid stream (predominantly Cu) are allowed to be eventually captured by D columns in the system.

Two forms of spent columns 1A are produced from the water decontamination system. Those columns taken from the first position in the system are loaded with technetium, organics, uranium, chromate and some other toxic inorganic cations such as copper and cadmium. Those columns taken from the second position in the system are loaded with all the species on the first 1A column except for organics.

Passage of 0.1 N HNO_3 through spent 1A columns led to increasing amounts of toxic and radioactive components being removed until a maximum level is reached. In Table XX the number of column volumes of 0.1 N HNO_3 required to be passed through the column to reach these maximum levels, together with the maximum concentrations achieved, are presented for stripping of the two columns $1A_3$ and $1A_4$ from the benchscale system. Column $1A_3$ was removed from the benchscale system after it had become loaded with Tc while column $1A_4$ remained in the system even after it became loaded with Tc and continued to be loaded with organics. Large quantities of copper are seen to be removed from both columns using 0.1N HNO_3 although very little separation is achieved between the maximum levels of copper and uranium. With the exception of cadmium larger quantities of material are stripped from the $1A_4$ column as compared to the $1A_3$ column. Only very small quantities of Tc are removed from the column with this stripping solution. The maximum levels of copper are removed after passage of 5 CV's of 0.1N HNO_3 and it is therefore proposed that 1A columns be stripped initially with this volume of 0.1 N HNO_3 in order to remove large quantities of Cu and other toxic metals

Figure 10: Block Diagram of Systems for Stripping Waste Loaded A and C Columns

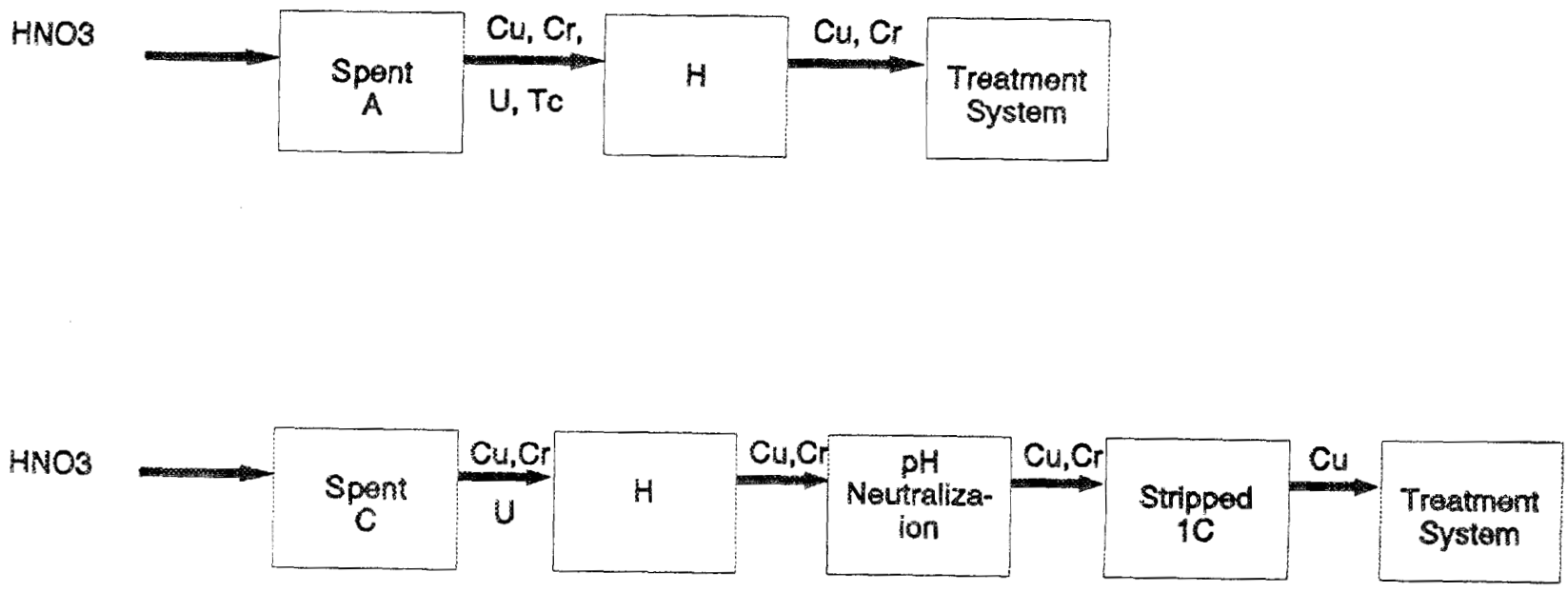

Table XX: Stripping of 1A Columns from the Benchscale System with 0.1 N HNO_3

	Maximum Levels of Elements in Stripping Solution			
	$1A_3$		$1A_4$	
Element				
	# of CV's	Concentration mg/l	# of CV's	Concentration (mg/l)
Cr	6	132	7	140
Cu	5	2760	5	60,000
Cd	3	3.2	6	2.8
U	8	420	6	3760
Tc	5-50	0.004	10	0.009

which may interfere with the later separation of the radioactives and toxics. This initial solution from both the above experiments was slowly introduced into the benchscale system after the first 1A column over a period of several days at a maximum rate of 12 mls per day. No adverse behavior of the benchscale system was observed.

Much higher concentrations of toxics and radioactives are stripped from the column when the influent is replaced with 1N HNO_3. This data is given in Table XXI which summarizes concentrations of some of the major contaminants which were tracked during the stripping experiments. After passing 0.1 N HNO_3 through column $1A_4$, passage of 1 N HNO_3 down the column increases the concentrations of species removed from the columns by around one order of magnitude.

Since the ultimate goal is to separate the mixed waste, stripping experiments were also performed in which the acid effluent of the 1A column containing both toxic and radioactive components is passed through an additional column, named 1H, which was checked for its ability to remove the radioactives from the stripping solution yet let the toxics remain. Column 1H is a charcoal based Dura-C column which undergoes special treatment in order to improve its selectivity properties. These experiments were carried out in a set up shown in Figure 10. Around 36 mls of 1N HNO_3 is placed in the influent bath. Initially valve V1 is open and valve V2 is closed. The influent is then pumped through a spent column at a rate of 2 column volumes per hour and then through either 1 or 2 1H columns before entering the recycling container. Sampling points are located after each column where 0.1 mls of sample may be removed with a syringe. Samples are diluted by a factor of 100 with deionized water and given for analysis. After all the influent has been pumped from the influent bath, valve V1 is closed and V2 is opened. Pumping is continued and the stripping solution is recycled via the recycling container.

Experiments run on this system using 1A columns yield errors analytical data with 100 times larger than other data given in this report because of the dilution of the samples. In the run on the $1A_4$ column for which concentration data is also given in Table XXI 6 column volumes of 1N HNO_3 are passed through the $1A_4$ column followed by a single 1H column in 8 cycles giving a total passage of stripping solution of 48 CV's. The data clearly shows that except for about the first 12 column volumes the concentrations of Cr, Cu and Cd are the same after the 1A column as after the 1H column indicating that the 1H column is essentially transparent to these species. In the initial two cycles of stripping, Cd and Cr are seen to be adsorbed on to the 1H column but then almost immediately released back into solution. On the other hand the radioactive species, U and Tc, are stripped from the 1A column and then effectively captured by the 1H column. These data may be seen in a graphical form in Figure 12 where the ratio of the concentrations of elements after the 1H column to the concentrations of elements after the 1A column is plotted against the number of column volumes of acid passed in the recirculation system. A value of zero indicates that the 1H column removes all the component released from the $1A_4$ column while a value of one indicates that the 1H column is transparent to that species. Values greater than one indicate release of excess of that element

Table XXI: Typical Levels of Contaminants in Effluent of Acid Stripping Experiments on Column 1A

Run #202

# of CV's Passed	Levels of Contaminants in Effluent from Column $1A_4$ in mg/L				
	Cr	Cu	Cd	U	Tc
Influent = 0.1 N HNO_3 - no recycling					
1	1.1	7.7	0.7	0.7	0.00
6	125	1630	2.8	3760	0.01
12	18.2	67.1	0.2	116	0.01
Influent = 1N HNO_3 - recycling - column $1H_1$ in cycle 6 CV's/Cycle					
1	496	222	1.9	89.5	0.01
12	97	81.2	0.3	19.9	0.05
24	118	112	0.3	10.5	0.05
36	224	167	0.3	3.4	0.06
48	290	195	0.4	1.1	0.05

# of CV's Passed	Levels of Contaminants in Effluent from Column $1H_1$ in mg/L				
	Cr	Cu	Cd	U	Tc
Influent = 1N HNO_3 - recycling - column $1H_1$ in cycle 6 CV's/Cycle					
1	1160	0	1.5	0.7	0
12	91.6	80.0	0.3	0	0
24	119	125	0.3	0	0
36	232	179	0.4	0	0
48	208	132	0.4	0	0

from the 1H column. Again it is clear that the toxic elements all essentially have a plateau at an H/A value of 1 while the radioactive U and Tc have H/A values of 0. Note again that large scatter of data is expected here since all samples were diluted by a factor of 100 for analysis. The 1H column is therefore extremely successful at removing solely the radioactive components from the stripping solution.

Stripping of the 1A column with 1N HNO_3 in this run initially leads to the removal of 0.01 mg/l Tc and over 100 mg/l U per sample. The level of Tc reaches about 0.1 mg/l after passage of about 4 CV's of 1N HNO_3 and then after 48 CV's the amount of U stripped from the column steadily decreases to about 1 mg/l while the Tc level remains at a plateau of around 0.05 mg/l. Although the column was not completely stripped of waste after 48 CV's of 1 N acid it was decided to reintroduce it in the benchscale system in order to check its viability for regeneration. The final three days of the benchscale operation were thus run with the partially stripped $1A_4$ column in the front position. The column however was found not to be effective in removing U, Tc or any of the toxics from the wastestream. Decontamination factors of less than 2 for Tc and less than 5 for uranium were achieved on this column. This suggests that only fully stripped columns may be regenerated since any waste components remaining on a partially stripped column may be concentrated in a band at the end of the column and passage of influent through the column may release waste into the effluent from this band.

In order to determine the volume of stripping solution required to fully unload a 1A column, column $1A_3$ was stripped to completion in the set up described in Figure 11. One 1H column was used for passage of the first 60 CV's and two 1H columns were used thereafter. The results are shown graphically in Figure 12 in which the concentration of species in the solution after passage through the first 1H column divided by its concentration after passage through the $1A_3$ column is plotted against the total number of column volumes of 1M HNO_3 passed through the 1A column.

The concentration of uranium in the effluent of 1A falls to below 0.1 mg/l after passage of 47 CV's of 1M HNO_3 in this run and the concentration of Tc falls below its detection limit after passage of 140 CV's. Since 14 CV's of 1N HNO_3 was passed down the $1A_3$ column also in a previous run it appears that 154 CV's of 1N HNO_3 are required to strip the $1A_3$ column of the radioactive components. An EPA Toxicity Characteristic Leaching Procedure (TCLP) test should be performed on the stripped 1A column in order to ensure that it may be classified as non-radioactive waste. This, however, requires at least 100 g of material and can therefore only be performed on spent 1A columns from the Pilot Plant. Since the specific activity of Tc-99 is 1.7×10^{-2} Ci/g compared to 3.6×10^{-7} Ci/g for depleted U the quantity of Tc-99 remaining on the stripped column can only be 2×10^{-5} times that of U.

The capacity of the 1H column can also be determined from the data. For passage of less than 60 CV's of 1N HNO_3 through the 1A column, corresponding to 46 CV's of 1N HNO_3 through the 1H column, the 1H column remains essentially transparent to the toxic components yet very effective at removing Tc and U. At flow volumes above this level however the Tc begins to break through the 1H column as may be seen in Figure 13. Indeed, for flow of many

Figure 11. Set up for Separating Mixed Waste Produced on Columns in Benchscale System

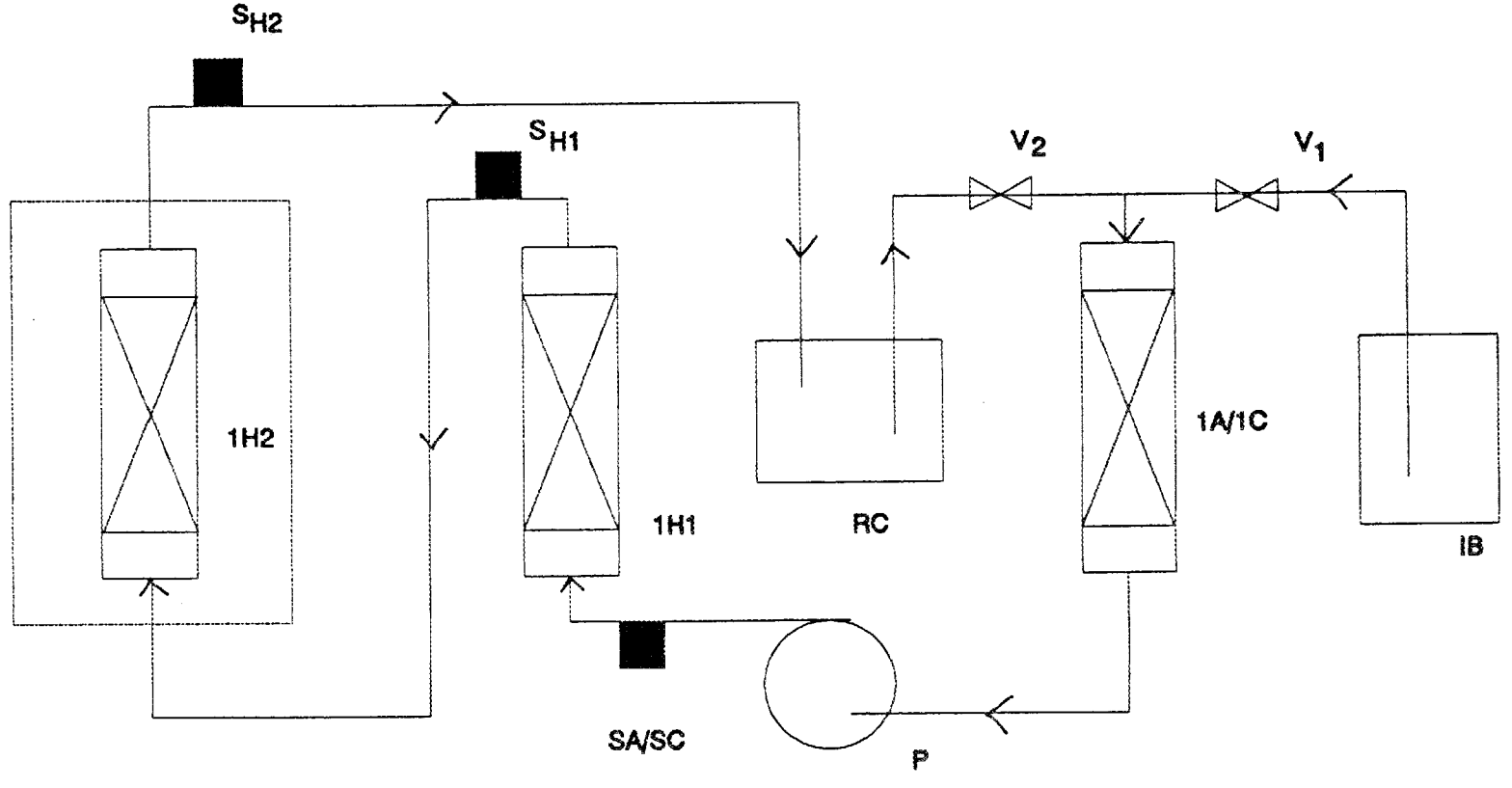

IB = Initial Influent Bath

RC = Recycling Container

P = Pump

V = Valve

S = Sampling Point

Fig. 12 Acid Stripping of Column 1A

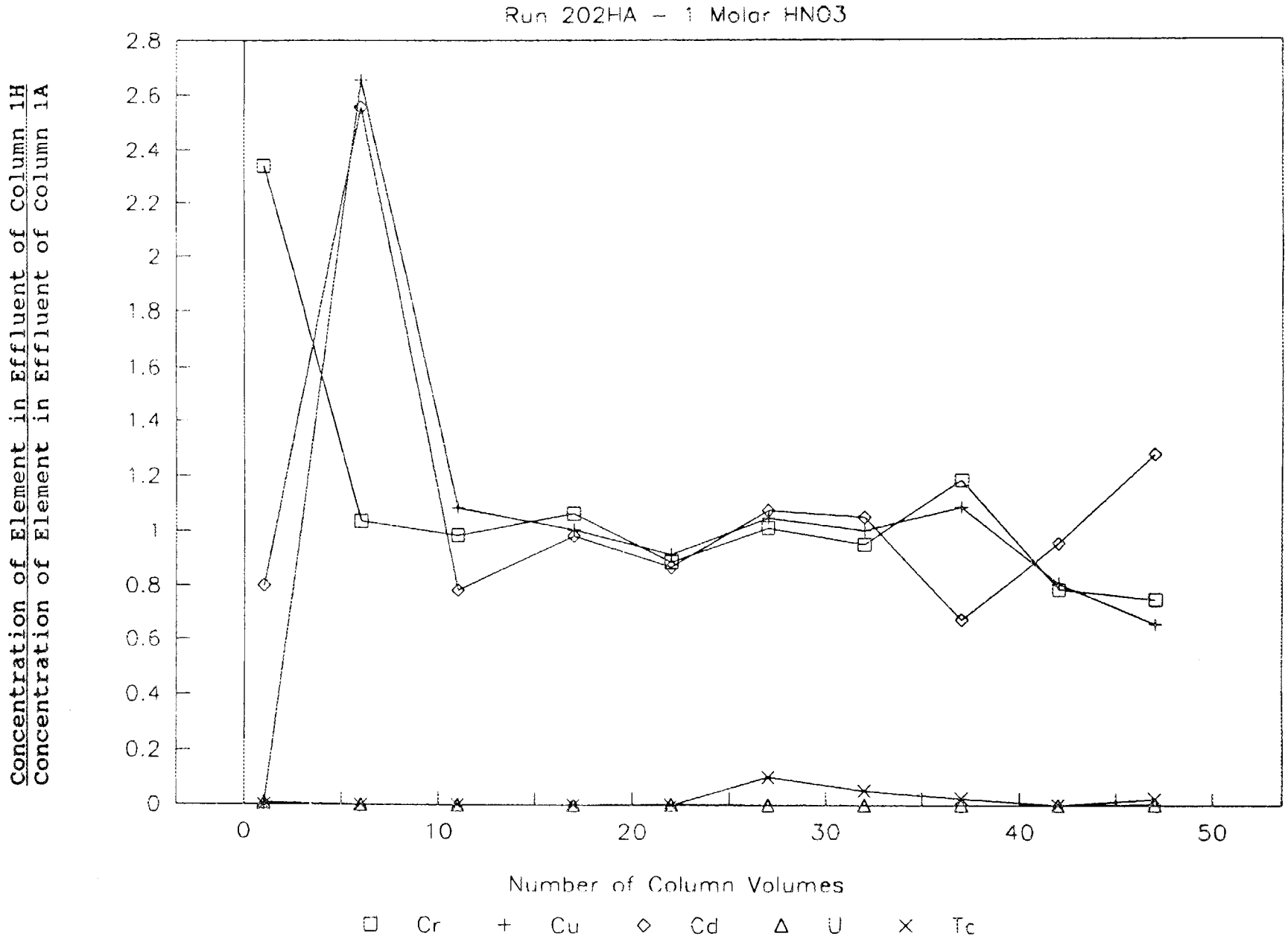

Fig. 13 Acid Stripping of Column 1A to Completion

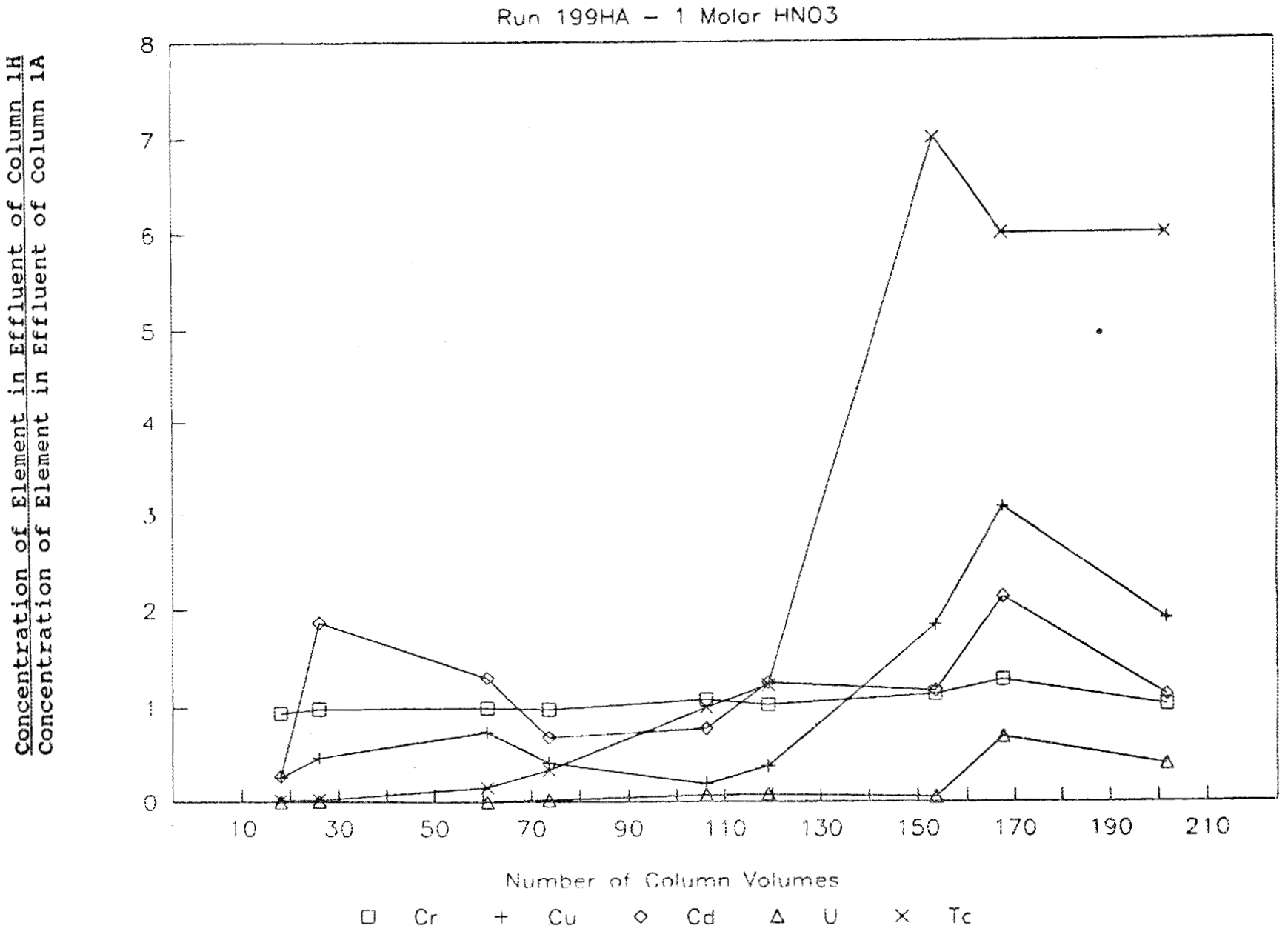

more cycles of 1N HNO_3 the 1H column releases more Tc than it is able to capture. In this set up, however, the second 1H column in series can pick up the expelled Tc. The first 1H column was also operated in a run in which 48 CV's of 1N HNO_3 were recirculated through the column. Thus a total of 94 CV's of 1N HNO_3 stripping effluent may be passed through a 1H column before Tc begins to break through. Thus a 1H column 1.5 times the size of the 1A column is required to collect all the Tc stripped from a 1A column. The capacity of a 1H column to remove U is however much larger. From this data it may be concluded that only after a total of 188 CV's does some uranium begin to pass through the column. This corresponds to a capacity of the 1H column for uranium exactly twice that for technetium.

Similar stripping experiments have been performed on 1C columns from both test experiments and the benchscale unit and the data are very similar to those for 1A. The $1C_2$ column from the benchscale system was removed and treated with 12 CV's of 0.1N HNO_3 and then with 64 CV's of 1N HNO_3 in the recycle system given in Figure 11 with just one 1H column. Sample concentration data are presented in Table XXII for the major contaminants monitored in these stripping experiments. No Tc was present on the column or appeared in the stripping data since in the benchscale system 1A columns were located prior to 1C columns in order to remove all the Tc-99. The maximum levels of species stripped from the column by 0.1N HNO_3 and the number of CV's of stripping solution required to reach these levels is given in Table XXIII. Again separation in the number of CV's of acid passed between the maximum levels of toxics and uranium is very small. However, passage of 6 CV's of 0.1N HNO_3 removes large quantities of Cu which may be returned to the decontamination system without removing such high concentrations of uranium.

The data obtained on recycling 6 CV's of 1N HNO_3 over 10 times through the setup shown in Figure 11 are also presented in Table XXII and in Figure 14 which again shows the ability of the 1H column to selectively remove U from the recycling solution. All the uranium is removed by the 1H column while except for some initial removal of Cu, the 1H column is transparent to all the other toxics. The concentration of uranium removed from the 1C column per column volume of influent is also found to steadily decrease and after passage of 64 column volumes of stripping solution its concentration is already just below 0.1 mg/l. Since the capacity of 1H columns for uranium was determined earlier to be 188 CV's, this result suggests that one 1H column will be sufficient to remove the radioactive material from a maximum of three spent 1C columns. It should be noted, however, that the $1C_2$ column used in this stripping experiment was not fully spent in the benchscale system and so this number should be considered as an upper limit. Due to the extremely long lifetime of the 1C columns in the benchscale system the viability of regeneration of the 1C material was not investigated.

Spent columns 2D are loaded with only toxic and non-toxic inorganics and regeneration of these columns will probably not be viable. This is because firstly the waste produced is not mixed and secondly the column has very high capacities for capturing the toxic species in solution.

Table XXII: Typical Levels of Contaminants in Effluent of Acid Stripping Experiments on Column 1C

Run #203

# of CV's Passed	Levels of Contaminants in Effluent from Column $1C_2$ in mg/L			
	Cr	Cu	Cd	U
Influent = 0.1 N HNO_3 - no recycling				
1	0.07	3.3	1.3	0.1
6	30.6	1510	4.5	123
12	7.3	93.5	0.8	14.9
Influent = 1N HNO_3 - recycling - column $1H_1$ in cycle 6 CV's/Cycle				
1	257	761	11.2	13.0
12	339	197	0.5	10.9
24	405	373	1.7	1.6
36	189	268	1.3	0.6
48	153	307	1.2	0.2
60	166	410	1.2	0.1

# of CV's Passed	Levels of Contaminants in Effluent from Column $1H_3$ in mg/L			
	Cr	Cu	Cd	U
Influent = 1N HNO_3 - recycling - column $1C_2$ in cycle 6 CV's/Cycle				
1	198	7.5	7.7	0
12	272	215	0.8	0
24	331	458	1.4	0
36	277	443	1.5	0
48	247	633	1.4	0
60	189	489	1.5	0

Table XXIII: Stripping of 1C2 Column from Benchscale System with 0.1N HNO_3

	Maximum Levels of Elements in Stripping Solution	
Element	# of CV's	Concentration mg/l
Cr	6	30.6
Cu	6	150.8
Cd	4	5.1
U	7	125.8

Fig. 14 Acid Stripping of Column 1C

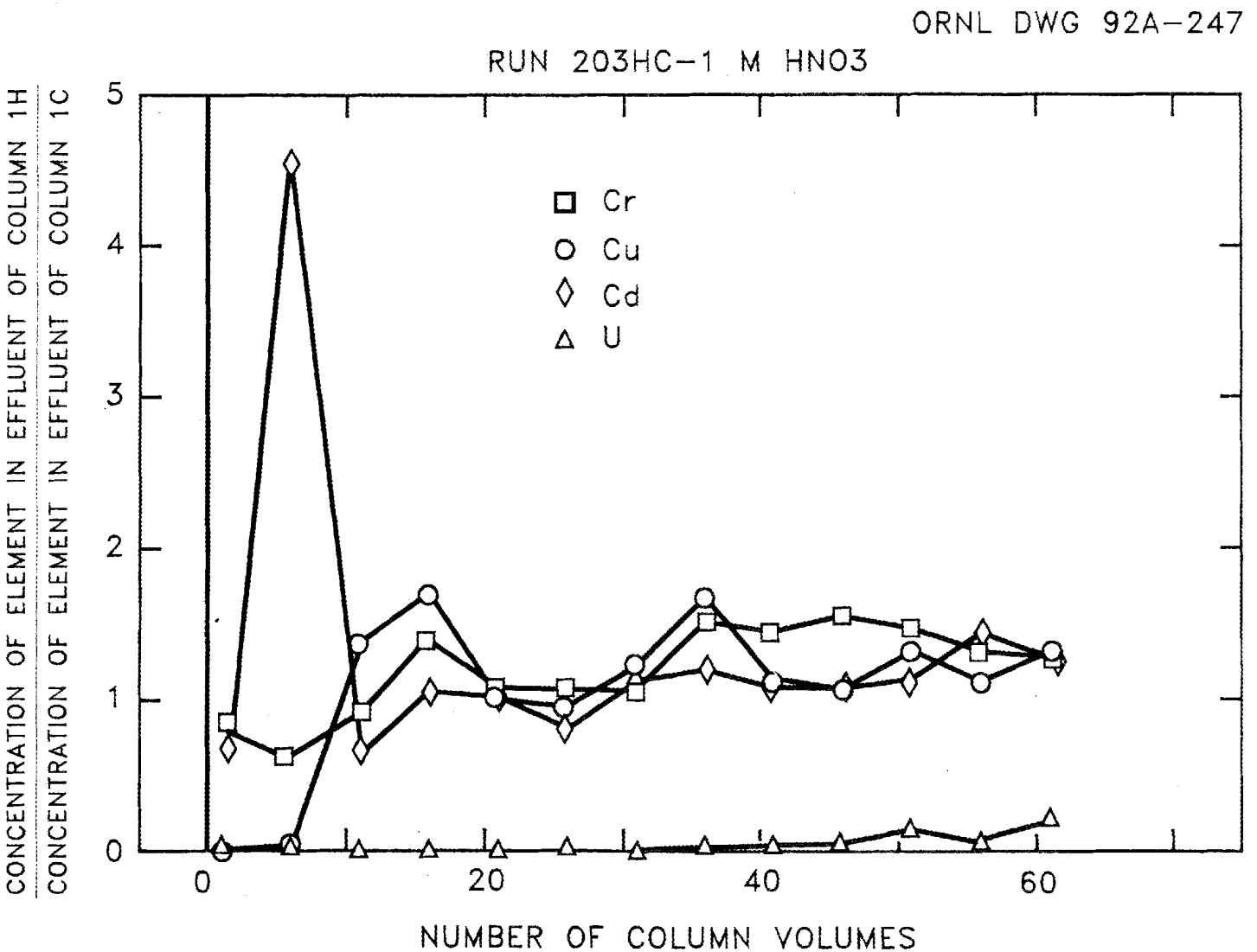

Problems Encountered and Corrective Actions Taken

A number of problems were encountered during the operation of both the benchscale and pilot plant units. However they were all alleviated after taking appropriate corrective action.

In the operation of the benchscale decontamination unit the influent over time was found to slightly precipitate and furthermore a green precipitate also began to form on the glass beads of the air sparger. Analysis of this precipitate dissolved in concentrated nitric acid showed it to be a mixture of mainly U, Cr, and Cu. The problem was overcome by lowering the pH of the influent to pH 4.9 which dissolved the precipitate in both the influent bottle and the air sparger and this still remained in the optimum pH range for operation of the 1A and 1C columns. Indeed in the pilot run the pH was lowered further to 4.7 and the concentration of copper reduced to 5 mg/l in the influent.

Some problems were also discovered on increasing the volume of media required from benchscale quantities to pilot plant quantities. For example the first 1C column placed in the system, $1C_2$, was found to be ineffective in the pilot plant since the procedure for manufacturing this ion exchange medium had still to undergo strict quality control. The first 1A column placed in the system after the $1C_2$ column, $1A_4$, was only 3 gallons in volume because of the short time scale involved in preparing the media. Both these columns were replaced with the full volume of correctly prepared material and the columns were found to behave as expected from the benchscale data for the remainder of the pilot plant run.

During the initial stages of the operation of the pilot plant the system shut itself off several times since the influent in the air sparger fell below a critical low level. This was attributed to high voltage fluctuations that occurred in the power supply due to the extremely hot summer which caused either P1 to pump too slowly or P2 to pump too fast for a short period of time. This problem was overcome by increasing the maximum flowrate of influent that may be pumped by P1. Another major problem did occur on one of these occasions when the system shutoff and the H_2O cutoff solenoid valve failed to close. At the time only one solenoid valve was present in the line. This caused the tap water supply to continue flowing water into the system even though the remainder of the system had ceased to operate and the containment structure filled with water until it was discovered the following morning. Analysis of the spilt water showed no harmful release of contamination and the excess water was drained away. An additional solenoid valve was therefore added on line, as shown in Figure 3a whose function is to shut-off only when the system shuts off but remains open otherwise. The other solenoid valve is continually opening and closing as it regulates the flow of faucet water into the influent mixing drum.

Since the ion exchange media in this system outperformed expectation insufficient time was allowed for running the pilot plant and it was not possible to unequivocally check the capacities of the columns in the larger scale version of the system. However, the limited data presented here do seem to suggest that the columns have similar characteristics both in the

benchscale and pilot plant versions of the system. Column stripping experiments could not be performed on spent pilot plant columns although the benchscale system was operated for longer than intended and these experiments were carried out on spent columns from this system.

Finally large quantities of PCB's were found to be unavailable commercially and therefore the ability of the pilot plant to decontaminate water containing PCB's was only checked for two four hour periods during the pilot run.

Conclusions Regarding the Benchscale and Pilot Phases

The goal of decontaminating mixed-waste contaminated water has clearly been achieved in the system described in this report based on air sparging and ion exchange technologies. This has been demonstrated in both laboratory scale and pilot scale systems. The number of gallons of contaminated water that may be treated per cubic foot of ion exchange material is given in Table XXIV demonstrating the very high capacities of the Durasil® columns. Furthermore, acid stripping of the spent columns in an appropriate cycle has been shown in benchscale tests to lead to the elimination of any mixed waste products thereby leading to reduced final disposal costs. Very impressive volume reductions in waste are achieved particularly after incineration of spent charcoal-based columns and after vitrification of spent glass-based columns.

While data from the pilot plant operation appears to correspond well with data from the benchscale run, continued operation of the pilot plant for a period of up to 6 months may be required in order to confirm the benchscale data on a larger scale system. These studies could yield more exact values for the capacities of the columns and will allow acid stripping and column regeneration experiments to be performed at the pilot level. Moreover, additional experiments could be carried out involving study of the feasibility of regenerating 2D columns and investigation of methods to increase the efficiency of the air sparger in order to enhance the lifetime of the $1A_1$ column. Such data could lead to even further improvement in the economic viability of the decontamination process.

Table XXIV: Estimates of the Number of Gallons of Contaminated Water that May Be Processed per Cubic Foot of Ion Exchange Medium

Column	
1A	49,000*
1C	>160,000
2D	17,500
1H	30,000

* This number assumes that each 1A column may be successfully regenerated once

Full-Scale Plant Using Proposed Treatment Technology

As a result of the success of the technology investigated in this report in treating the contaminated groundwater and in generating no mixed waste, a full-scale plant could now be constructed and operated on site with contaminated groundwater. The design of such a plant is given in Figure 15. For flow rates of less than around 10 gallons per minute it is envisaged that the system could be located in a trailer which would also provide the advantage of mobility allowing the system to be moved from one contaminated site to another. For plants requiring flow rates much greater than 10 gallons per minute, a special facility may have to be built to house the decontamination system.

In a full scale decontamination system, mixed-waste contaminated groundwater is pumped into the system using pump P1 through a filter. Nitric acid is added to the influent in order to bring the pH of the solution to around 4.7. Passage of the influent through a mixer ensures complete mixing of the acid and groundwater. The solution then passes through an air sparger to remove the volatile organic compounds and is then pumped through a series of ion exchangers much like those used in the benchscale and pilot plant demonstration units. It is planned to place 3 1A columns followed by a 1C column, another 1A column and then 3 2D columns all in series. The use of an additional 1A column and an additional 2D column adds some redundancy to the system however these extra backup columns permit less stringent monitoring of the effectiveness of the columns and hence analysis of samples will be necessary only twice a week thus reducing the operating costs quite considerably. Replacement of one of the first 3 1A columns or one of the last 3 2D columns may be performed by removal of the spent column followed by the addition of a fresh column. The decontamination system may continue operating with only 2 of each of these columns while the replacement procedure takes place. However replacement of either the $1C_1$ or $1A_4$ column requires installation of a fresh column before removal of the spent column and hence an extra position between these two columns is available. The decontaminated water will finally pass through a reverse osmosis system in order to reduce the high salt concentration. The raffinate stream from the reverse osmosis unit consisting of a concentrated sludge of nitrates and calcium and magnesium salts may be used to provide feed additives to the vitrification process or the ceramic manufacturing process required in the final disposal of the spent ion exchangers. Alternatively no reverse osmosis may be required if the effluent is discharged into a river such that the resulting level of nitrates remains below the drinking water level of 10 ppm.

Figure 15 FULL SCALE PLANT FOR TREATMENT OF MIXED WASTE CONTAMINATED GROUNDWATER AND ELIMINATION OF SECONDARY MIXED WASTE

a) Proposed System for Processing Mixed Waste Contaminated Groundwater

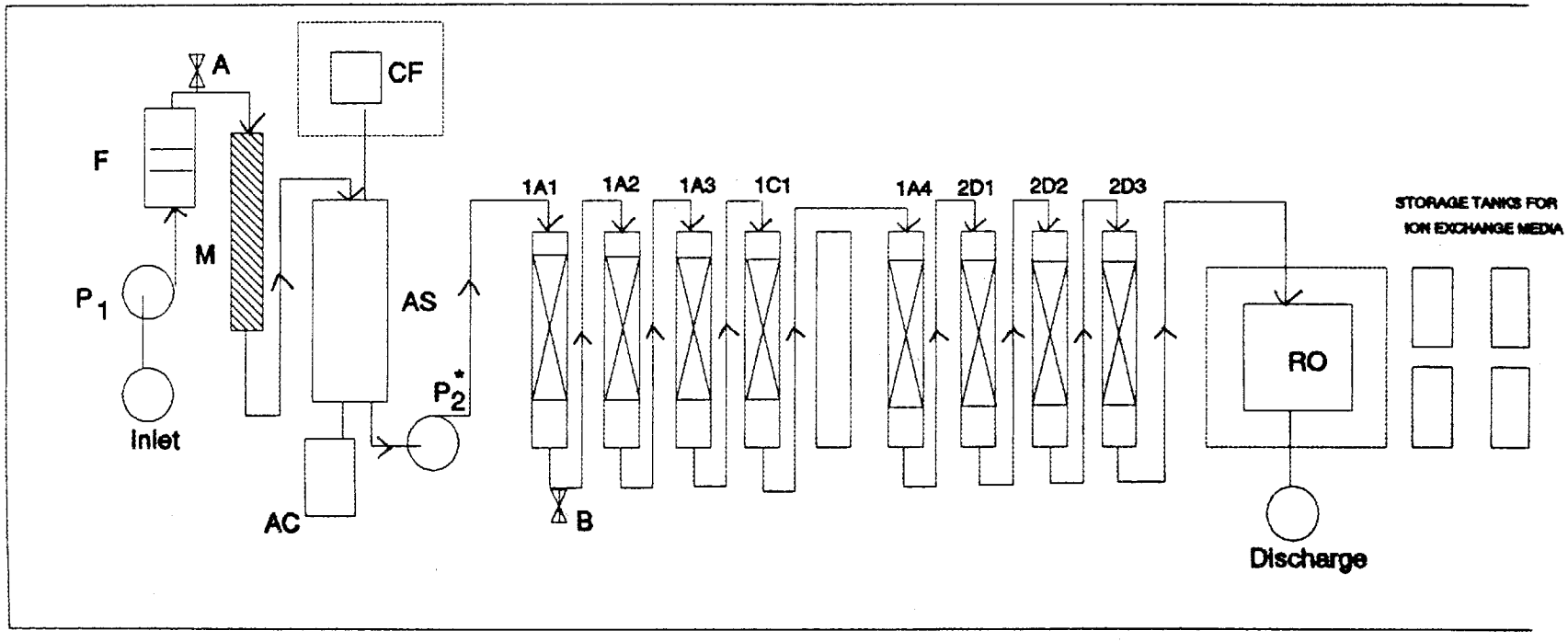

b) Proposed System for Separation of Mixed Waste and Regeneration of Spent Columns

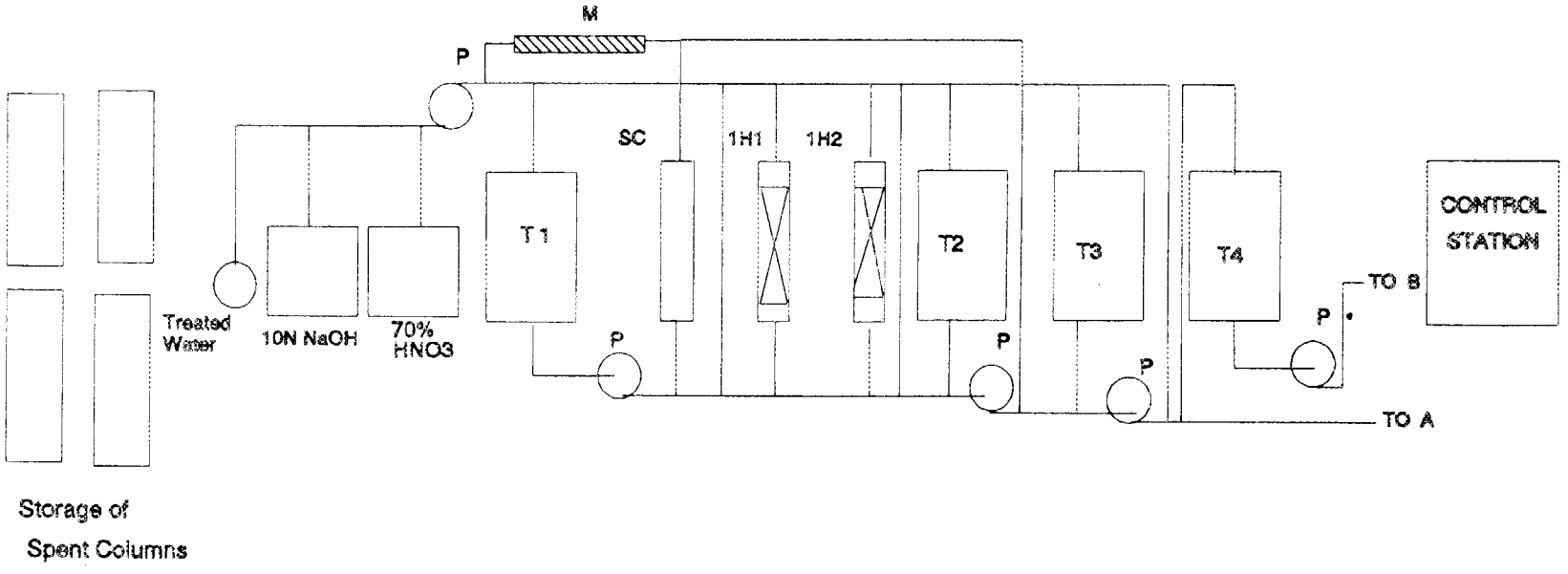

Note valves and flow directions showing complex circulation cycles of solutions are not given in this figure. See text and Figure 16 for more details on stream flows for a typical regeneration.

Legend

P = Pump
F = Filter
AS = Air Sparger
AC = Air Compressor

CF = Charcoal Filter
T = Tank
M = Mixer
* = Several Pumps On Line

SC = Spent Columns

The spent column decontamination set up is shown in the lower half of Figure 15. It contains 4 holding tanks labelled T1 to T4, a position for a spent 1A or 1C column and two 1H columns. Demixing of the radioactive and toxic species captured on the spent 1A or 1C columns is performed by passage of 6 CV's of 0.1N HNO_3 followed by recirculation of 5 CV's of 1N HNO_3 through the spent column and the two 1H columns 10 times. Residence times of 30 minutes appear to be reasonable from the research data obtained in this project. Two 1H columns are required in the cycle since $1H_2$ acts as a backup to $1H_1$ when the $1H_1$ column becomes loaded with radioactives. At the end of the cycle the loaded $1H_1$ may be removed, the $1H_2$ column may be brought forward to the $1H_1$ position and a fresh 1H column can be placed in the old $1H_2$ position.

The nitric acid used for stripping the spent columns can also be used for acidifying the influent to the required pH of 4.5 to 5.0 in the main groundwater processing system. This relieves the need to dispose of any contaminated nitric acid and also reduces the cost of the treatment process. The "lifecycle" of nitric acid in the decontamination system is shown in Figure 16. Part (a) of Figure 16 shows the use of HNO_3 in stripping a 1A column and acidifying the influent and part (b) of Figure 15 shows its use in stripping a 1C column. Each of the columns used in the acid stripping and column regeneration scheme described in Figure 16 undergoes three stages labelled I, II, and III. For column 1A removal of excess loaded toxic material with 0.1N HNO_3 occurs in stage I, acid stripping of all the remaining loaded wastes with 1N HNO_3 in a number of cycles occurs in stage II, and washing out of the acid with treated water occurs in stage III. Stages I and II are the same for 1C as for 1A but stage III involves return of the toxic waste, mainly in the form of chromium, onto the column in a neutralized solution. The 1H columns also undergo three stages. In stage I they are placed in the back position in the acid stripping system to protect against breakthrough of radioactive contaminants through a 1H column in the front position. The column is then placed in the front position in stage II until it is fully loaded with radioactives while in stage III fresh 1N HNO_3 is passed through the column to remove any trace levels of toxics collected on the column.

For the stripping of both columns a solution of 5 column volumes of 1N nitric acid is prepared in tank T1 by diluting the appropriate volume of 70% HNO_3 with the required volume of effluent discharged from the main groundwater decontamination system. If a spent 1H column, which contains predominantly U and Tc with some copper, is available after removal from the stripping cycle, this 1N HNO_3 is slowly passed through this column into tank T2. This will remove the copper and any other loaded toxic cations leaving the column loaded only with U and Tc. It may then be disposed of as radioactive waste. The solution in tank T2 may then be recirculated around 30 times through a spent 1A column or 12 times through a spent 1C column and the 1H columns such that the U and Tc will be stripped from the spent column and captured on a 1H column. The solution in T2 will then be rich in the toxic inorganics.

In the case of stripping of 1A columns, 0.6 CV's of the solution in tank T2 is mixed in tank T3 together with 5.4 CV's of water discharged from the main decontamination system. This water is passed through a stripped 1A column first in order to bring the pH of the column

Figure 16 (a): Proposed Scheme for Use of Nitric Acid for Acidifying Influent and Stripping 1A Column

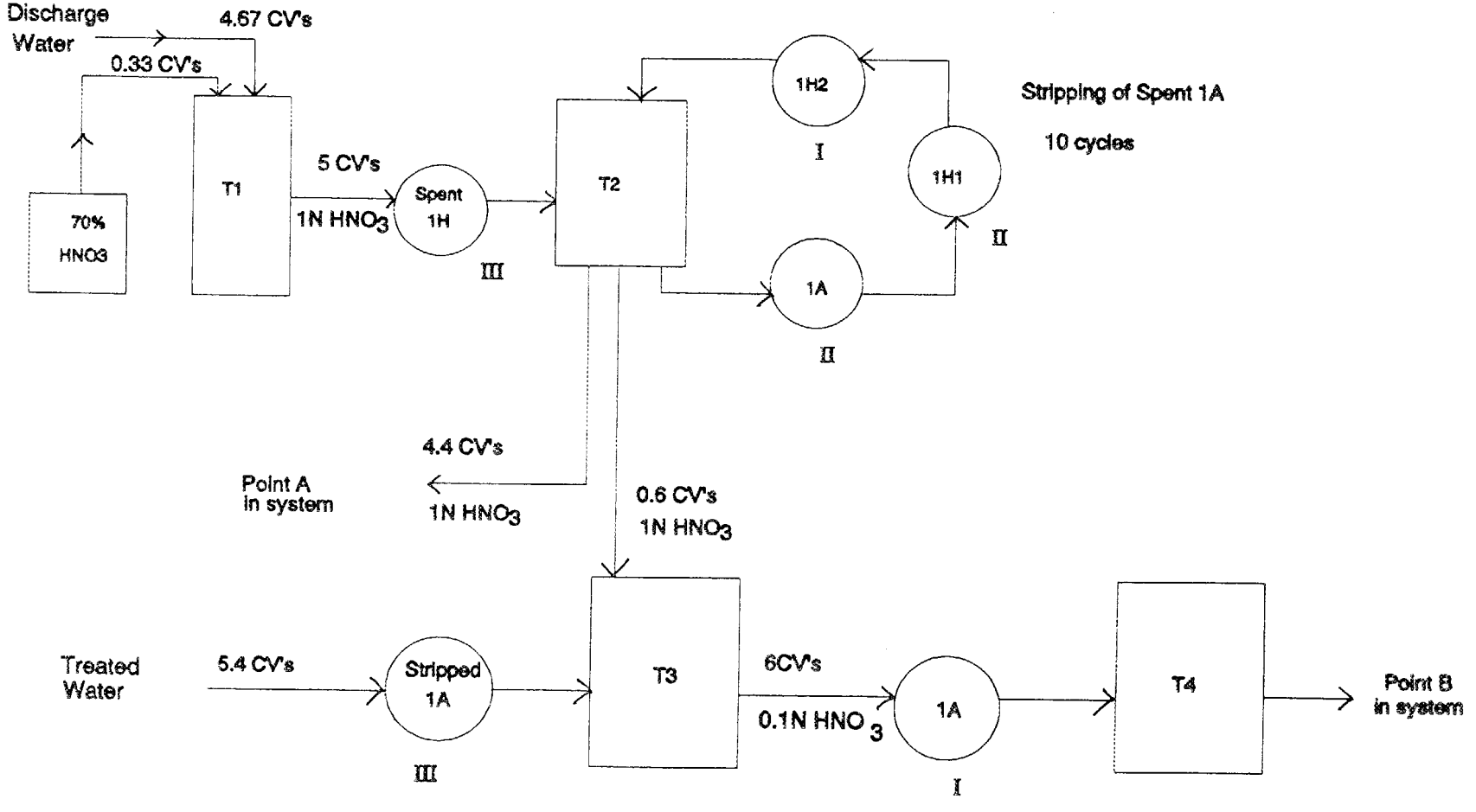

Figure 16 (b): Proposed Scheme for Use of Nitric Acid for Stripping 1C Columns

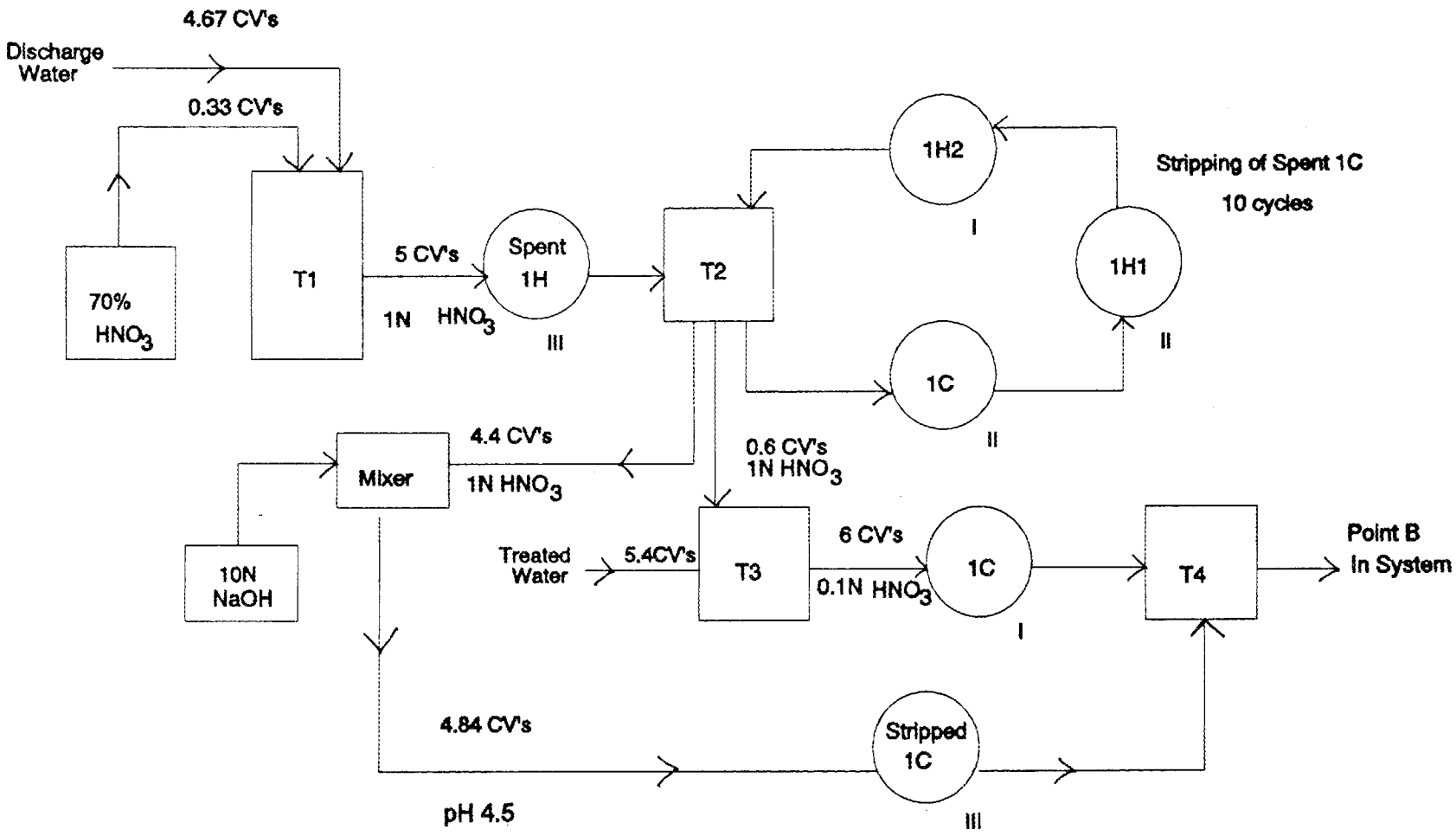

to around 5 so that it may then be placed back in the main system. This tank T3 will contain 6 CV's of 0.1 N HNO_3 which may be passed through a 1A column immediately after its removal from the main system in order to remove excess quantities of the toxic inorganics captured by the column. The effluent of this step passed into tank T4 where it is stored and then allowed to be slowly entered into the main system at point B. The remaining 4.4 CV's of 1N acid solution in tank T2 after the stripping cycles is used for acidifying the influent in the main decontamination system by its addition to point A at a rate which maintains a pH of the influent of around 4.5-5.

The order in which a spent 1A column undergoes the stripping procedure is shown by the 6 column volumes of 0.1 N HNO_3 at stage I, then undergoes 30 cycles of stripping by 5 CV's of 1 N HNO_3 at stage II, and is finally washed with 5.4 CV's of discharge water at stage III. Storage of the spent columns is necessary between strippings since the columns will be required in at least two stripping processes for optimum use of the nitric acid in this process before a 1A column will be regenerated.

1C columns cannot be regenerated since their lifetimes in the decontamination process are so long although they can be used for storing some of the toxic anions. Thus 4.4 column volumes of the solution in tank T2 after the stripping cycles is neutralized with NaOH to a pH of around 4.5 and then passed back through the stripped 1C column. At this pH the toxic anions, mainly chromate, are returned to the 1C column and the relatively clean effluent is added back to the system at point B after storage in Tank T4.

While these stripping processes have not been demonstrated in the pilot plant, since the lifetimes of the columns were too long to produce enough spent media in the time frame allowed for testing the principal stages have been shown to be feasible from experiments of the benchscale level. They are also expected to behave similarly on upscaling. Furthermore, the systems shown in Figure 15 enclosed within dotted lines, namely a charcoal filter to adsorb the vapors of VOC's from the air sparger and a reverse osmosis system after the 2D columns to reduce the non-toxic salt content in the effluent, have not been investigated in either our benchscale or pilot plant experiments since they represent existing technologies which are readily available commercially.

The systems and processes described in Figures 15 and 16 have also been designed in order to minimize the number of analyses required to be performed to ensure success in processing the contaminated groundwater. Analysis of samples from the decontamination system will be required twice a week since a backup ability of at least 4 days is built into the system in the event of column breakdown. Analysis of samples from the acid stripping processes will be required once per process in order to confirm the successful separation of mixed waste on the columns and the ability of the 1H columns to perform their function.

A cost estimate has been made for the above described system operating at a flow rate of 10,000 gallons per day. Three components enter the cost:

1. Capital Equipment
   A trailer with 12 columns, each 12" diameter, all necessary piping, pumps, level controllers, miscellaneous tanks etc. This is estimated to cost the customer 1.25 cents/gallon if the capital cost of equipment is expended over five years.

2. Operator and Project Management Costs
   One operator working full time with an estimated overtime of 520 hours/year and one project manager employed for 20% of his/her time is expected to cost the customer 3 cents/gallon.

3. Ion Exchange Media and Miscellaneous Chemicals
   Since the capacities of the ion exchange media have not yet been finally determined for the pilot plant only a rough estimate for media and chemical costs of 5.38 cents/gallon has been made.

These prices are based on the DCAA audited rates of Duratek with an 8% profit (fee) and assume a 5 year contract after which the equipment becomes the property of Martin Marietta Energy Systems. These prices also, of course, depend on many other parameters including the waste stream contaminants, the total number of gallons processed and any special construction or operating codes or regulation that may be required to be invoked. Several items are not included in the cost estimate, these being analysis of samples, disposal of columns and peripheral decontamination systems such as a charcoal filter for the air sparger and the reverse osmosis unit. The total cost of 9.63 cents/gallon may be considerably reduced if the contaminated groundwater contains only one type of waste or if the contaminant concentrations are lower than those in the surrogate.

References

1. "Methods for the Determination of Organic Compounds in Drinking Water", Document Number EPA-600/4-88/039, December 1988, p. 285.

2. "Methods for the Determination of Organic Compounds in Drinking Water", Document Number EPA-600/4-88/039, December 1988, p. 325.

ORNL/TM-11927

INTERNAL DISTRIBUTION

1. R. E. Adams
2. J. M. Begovich
3. W. D. Bostick
4. J. T. Bradbury
5. C. H. Brown, Jr.
6. T. R. Butz
7. V. B. Campbell
8. R. M. Canon
9. H. M. Clancy
10. O. K. Clotfelter
11. J. L. Collins
12. K. W. Cook
13. A. G. Croff
14. N. S. Dailey
15. T. L. Donaldson
16. H. M. Braunstein
17. R. S. Eby
18. B. Z. Egan
19. R. L. Fellows
20. R. K. Genung
21. L. V. Gibson, Jr.
22. R. W. Glass
23. D. B. Gunter
24. J. L. Haymore
25. F. K. Heacker
26. J. E. Heiskell, Jr.
27. I. W. Jeter
28. G. E. Kamp
29. T. E. Kent
30. R. K. Kibbe
31. A. J. Kuhaida, Jr.
32. D. B. Lloyd

33 - 42. T. F. Lomenick
43. R. Machanoff
44 - 53. A. P. Malinauskas
54. N. G. McRae
55 - 64. C. P. McGinnis
65. R. P. Migun
66. J. Q. Miller
67. T. H. Monk
68. M. I. Morris
69. J. M. Napier
70. More Norris
71. K. E. Plummer
72. R. Poling
73. J. K. Prazniak
74. J. G. Pruett
75. S. M. Robinson
76. D.P.Schaefferkoetter
77. C. E. Scheibly
78. M. J. Shelton
79. R. L. Siegrist
80 - 89. S. P. N. Singh
90. R. E. Swatzell
91. D. W. Swindle
92 - 101. J. S. Watson
102. E. L. Youngblood
103. H. R. Yook
104. Central Research Library
105. Document Refer. Section
106 - 115. Laboratory Records
116. Laboratory Records - RC
117. ORNL Patent Sect - RC
118. EMD Document Mgmt Center
119 - 128. ER Document Mgmt Center

EXTERNAL DISTRIBUTION

130. W. D. Adams, DOE, FOB, Rm. 2116, Oak Ridge, TN 37830
131. T. D. Anderson, U. S. DOE Headquarters, Trevion Bldg. II, Suite 400, 12800 Middlebrook Road, Germantown, MD 20874

132. D. L. Berry, Sandia National Laboratories, Dept. 6620, Albuquerque, NM 87185-5800
133. J. D. Berger, Westinghouse Hanford Company, Manager, Office of Technology Integration, LO-18, P. O. Box 1970, Richland, WA 99352
134. W. R. Bibb, DOE, FOB, Rm. 309, Oak Ridge, TN 37830
135. R. E. Blake, Portsmouth Plant, P. O. Box 628, Piketon, OH 45661
136. J. J. Blakeslee, EG&G Rocky Flats, Program, Manager, Nuclear Waste Processing, P. O. Box 464, Golden, CO 80402-0464
137. R. A. Carrington, MSE Inc., P. O. Box 3767, Butte, MT 59702
138. P. Colombo, Brookhaven National Laboratory, Upton, NY 11973
139. D. G. Cope, PGDP, P.O. Box 1410, C743-1, MS-105A, Paducah, KY 42001
140. J. P. Corones, Ph.D., Deputy Director, Ames Laboratory, 108 Office & Lab Bldg., Iowa State University, Ames, IA 50011
141. H. Dugger, Kaiser Engineers Hanford Co., Environmental Support Org., P. O. Box 888, Richland, WA 99352
142. P. H. Edmonds, Radian, 120 S. Jefferson Circle, Oak Ridge, TN 37830
143. D. Emelia, Strategic Planning Dept., Chem-Nuclear Geotech, P. O. Box 14000, Grand Juction, CO 81502-2567
144. R. B. Evans, Ph.D., Reynolds Electrical & Engineering Co., Inc., P. O. Box 98521, MS417, Las Vegas, NV 89193-8521
145. Clyde Frank, U. S. Department of Energy, 12800 Middlebrook Rd., Germantown, MD 20874
146. B. Gillies, ETEC, D/030, TO38, P. O. Box 1449, Canoga Park, CA 91304
147. C. S. Gist, DOE, FOB, Rm. 2116, Oak Ridge, TN 37830
148. S. T. Grady, SAIC, 800 Oak Ridge Turnpike, Oak Ridge, TN 37830
149. W. G. Greenman, Duratek Corporation, 8955 Guildford Road, Suite 200, Columbia, MD 21046
150. G. Gupta, Solar Thermal Electric Program, Solar Energy Research Institute, 1617 Cole Boulevard, Golden, CO 80401
151. J. E. Helt, Ph.D., Argonne National Laboratory, Director, 9700 South Cass Avenue - CMT/205, Argonne, IL 60439-4837
152. J. P. Hopper, Westinghouse Materials Co. of Ohio, P. O. Box 398704, Cincinnati, OH 45329-8704
153. R. L. Jacobson, Ph.D., University of Nevada Water Resources Center, Associate Research Professor, Suite 1 2505 Chandler Avenue, Las Vegas, NV 89120
154. M. R. Jugan, DOE, FOB, Rm. 2116, Oak Ridge, TN 37830
155. M. Lankford, U.S. DOE Headquarters, Trevion Bldg. II, Suite 400, 12800 Middlebrook Road, Germantown, MS 20874
156. P. B. Macedo, Duratek Corporation, 8955 Guildford Road, Suite 200, Columbia, MD 21046
157. T. L. Mayfield, FEDC, MS 8218, Oak Ridge, TN 37830
158. L. W. McClure, Westinghouse Idaho Nuclear Company Inc., P. O. Box 4000, Idaho Falls, ID 83403-4000
159. T. McEvilly, 50E-111, Lawrence Berkeley Laboratory, 1 Cyclortron Road, Berkeley, CA 94720
160. J. O. Moore, DOE-OR, P. O. Box 2001, Oak Ridge, TN 37831

161. H. D. Murphy, ET-AET, Los Alamos National Lab., MS D446, Los Alamos, NM 87545
162. T. E. Myrick, SAIC, 800 Oak Ridge Turnpike, Oak Ridge, TN 37830
163. W. L. Richards, PGDP, P. O. Box 1410, C743-T01, Paducah, KY 42001
164. L. Rogers, EG&G Energy Measurements Inc., P. O. Box 1912 MS RSL-11, Las Vegas, NV 89125
165. R. E. Sassoon, Duratek Corporation, 8955 Guildford Road, Suite 200, Columbia, MD 21046
166. J. P. Shipley, Jr., Los Alamos National Lab, MS F643, Los Alamos, NM 87545
167. S. C. Slate, Pacific Northwest Laboratory, MSIN KI-25, Office of Env. Tech., P. O. Box 99, Richland, WA 99352
168. R. C. Sleeman, DOE, FOB, Rm. 216, Oak Ridge, TN 37830
169. R. H. Snyder, Portsmouth Plant, P. O. Box 628, Piketon, OH 45661
170. J. L. Steele, P.E., Manager, Waste Environmental Remediation Programs, Westinghouse Savannah River Company, P. O. Box 616, Aiken, SC 29802
171. K. Stevenson, U.S. Department of Energy, 376 Hudson St., New York, NY 10014-3621
172. C. L. Valle, Allied Signal Aerospace, Kansas City Plant, P. O. Box 41959, D/272, FV43, Kansas City, MO 64141-6159
173. P. Wichlacz, EG&G Idaho, Inc., P. O. Box 1625, MS3940, Idaho Falls, ID 83415-3940
174. J. L. Yow, Jr., Lawrence Livermore National Laboratory, University of California, P. O. Box 808, Livermore, CA 94550
175. Office of Assistant Manager, Energy Research and Development, DOE-OR, P. O. Box 2001, Oak Ridge, TN 37831

176 - 185. Office of Scientific and Technical Information, P. O. Box 62, Oak Ridge, TN 37831

☆U.S. GOVERNMENT PRINTING OFFICE: 1992-648-072-60003