MARTIN MARIETTA ENERGY SYSTEMS LIBRARIES
3 4456 0349620 5

ornl

ORNL/TM-12027
UC-522, -810, -811

OAK RIDGE NATIONAL LABORATORY

MARTIN MARIETTA

Options for Treating High-Temperature Gas-Cooled Reactor Fuel for Repository Disposal

A. L. Lotts
W. D. Bond
C. W. Forsberg
R. W. Glass
F. E. Harrington
G. E. Michaels
K. J. Notz
R. G. Wymer

OAK RIDGE NATIONAL LABORATORY
CENTRAL RESEARCH LIBRARY
CIRCULATION SECTION
4500N ROOM 175
LIBRARY LOAN COPY
DO NOT TRANSFER TO ANOTHER PERSON.
if you wish someone else to see this report, send in name with report and the library will arrange a loan.
ORNL-118 (6-97)

MANAGED BY
MARTIN MARIETTA ENERGY SYSTEMS, INC.
FOR THE UNITED STATES
DEPARTMENT OF ENERGY

This report has been reproduced directly from the best available copy.

Available to DOE and DOE contractors from the Office of Scientific and Technical Information, P.O. Box 62, Oak Ridge, TN 37831; prices available from (615) 576-8401, FTS 626-8401.

Available to the public from the National Technical Information Service, U.S. Department of Commerce, 5285 Port Royal Rd., Springfield, VA 22161.

This report was prepared as an account of work sponsored by an agency of the United States Government. Neither the United States Government nor any agency thereof, nor any of their employees, makes any warranty, express or implied, or assumes any legal liability or responsibility for the accuracy, completeness, or usefulness of any information, apparatus, product, or process disclosed, or represents that its use would not infringe privately owned rights. Reference herein to any specific commercial product, process, or service by trade name, trademark, manufacturer, or otherwise, does not necessarily constitute or imply its endorsement, recommendation, or favoring by the United States Government or any agency thereof. The views and opinions of authors expressed herein do not necessarily state or reflect those of the United States Government or any agency thereof.

ORNL/TM-12027
UC-522, -810, -811

OPTIONS FOR TREATING HIGH-TEMPERATURE GAS-COOLED REACTOR FUEL FOR REPOSITORY DISPOSAL

A. L. Lotts**
W. D. Bond
C. W. Forsberg
R. W. Glass*
F. E. Harrington**
G. E. Michaels
K. J. Notz
R. G. Wymer**

Chemical Technology Division
*Engineering Division
**Consultant

Date Published: February 1992

Prepared by the
OAK RIDGE NATIONAL LABORATORY
Oak Ridge, Tennessee 37831-2008
managed by
MARTIN MARIETTA ENERGY SYSTEMS, INC.
for the
U.S. DEPARTMENT OF ENERGY
under contract DE-AC05-84OR21400

MARTIN MARIETTA ENERGY SYSTEMS LIBRARIES

3 4456 0349620 5

CONTENTS

FIGURES vii
TABLES ix

ABSTRACT xi

1. INTRODUCTION 1
   1.1 OBJECTIVES 1
   1.2 SCOPE 1
   1.3 BASIS OF THE ASSESSMENT 2
   1.4 ASSUMPTIONS 2
   1.5 UNIQUE ASPECTS OF HTGR FUEL 3

2. INSTITUTIONAL ISSUES 5
   2.1 REPOSITORY WASTE ACCEPTANCE CRITERIA 5
   2.2 CARBON-14 7
   2.3 APPLICABLE RADIATION PROTECTION STANDARDS 7
   2.4 DISPOSAL OF RADIOACTIVE PROCESSING WASTE 7
   2.5 SAFEGUARDS: ISSUES RELATED TO NON-WEAPONS STATES 8
   2.6 REFERENCES 9

3. DESCRIPTION OF HTGR FUELS 11
   3.1 INTRODUCTION 11
   3.2 FORT ST. VRAIN FUEL 12
      3.2.1 Physical and Chemical Description of Fort St. Vrain Fuel 12
      3.2.2 Quantities of Fort St. Vrain Fuel 17
      3.2.3 Radiological Properties of Fort St. Vrain Fuel 19
   3.3 PEACH BOTTOM-1 REACTOR FUEL 22
   3.4 COMPARISON TO OTHER NON-STANDARD FUELS 24
   3.5 FUTURE HTGRS 25
   3.6 REFERENCES 27

4. OVERVIEW OF OPTIONS 29
   4.1 WHOLE-BLOCK DISPOSAL 29
   4.2 DISPOSAL WITH PRIOR REMOVAL OF GRAPHITE 33
   4.3 DISPOSAL WITH DISSOLUTION OF SPENT FUEL 34

5. WHOLE BLOCK DISPOSAL 35
   5.1 INTRODUCTION 35
   5.2 ACCEPTABILITY OF WHOLE BLOCK DISPOSAL 35
      5.2.1 Previous Studies and Experiments 35
      5.2.2 Comparison of the Characteristics of HTGR Spent Fuel with Repository Acceptance Requirements 37

5.2.2.1 Allowable Release Rates for Radionuclides from the Repository 37
5.2.2.2 Allowable Organics in a Repository 39
5.2.2.3 Combustibility 40
5.2.3 Comparison of HTGR and LWR Spent Fuel Under Repository Conditions 41
5.2.3.1 Physical Effects 41
5.2.3.2 Chemical Effects 42
5.2.3.3 Combined Physical Form and Chemical Effects . . . 44
5.2.4 Options for Improved Whole Block Disposal 44
5.3 REPOSITORY ENGINEERING AND COST CONSIDERATIONS 45
5.3.1 Repository Engineering Limits 45
5.3.2 Heat Limits 46
5.3.3 Volume Limits 47
5.3.4 Waste Form 48
5.3.5 Relative HTGR and LWR Spent Fuel Disposal Costs 49
5.4 REFERENCES 50

6. DISPOSAL WITH REMOVAL OF GRAPHITE 53
6.1 OPTIONS AVAILABLE 53
6.2 PHYSICAL SEPARATION OF GRAPHITE 53
6.3 CHEMICAL SEPARATION OF GRAPHITE (BURNING) 54
6.4 POSSIBLE IMPROVEMENTS TO FUTURE HTGR FUEL 55
6.5 STATUS OF TECHNOLOGY 56
6.6 REFERENCES 57

7. DISPOSAL WITH DISSOLUTION OF FUEL 59
7.1 OVERALL FLOW SHEET 59
7.2 HEAD-END OPERATIONS 61
7.3 SOLVENT EXTRACTIONS 63
7.4 OFF-GAS TREATMENT 64
7.5 LIQUID AND SOLID WASTE PROCESSING 64
7.6 STATUS OF TECHNOLOGY 65
7.7 REFERENCES 66

8. SCHEDULES AND COSTS 69
8.1 DEVELOPMENT COSTS 69
8.2 CAPITAL COSTS 71
8.3 SCHEDULES 71
8.4 OPERATING COSTS 72
8.5 SUITABILITY OF WASTE FOR THE REPOSITORY 72

9. CONCLUSIONS 73
9.1 CONCLUSIONS ON WHOLE BLOCK HTGR SPENT FUEL DISPOSAL 73

9.2 CONCLUSIONS ON DISPOSAL AFTER SEPARATION OF GRAPHITE AND SPENT FUEL 74
9.3 CONCLUSIONS ON DISPOSAL WITH DISSOLUTION OF FUEL 75

APPENDIX A: DETAILS OF FORT ST. VRAIN FUEL 77
A.1 GRAPHITE 79
A.2 VARIATION IN DESIGN OF FUEL BLOCKS . . . 79
A.3 FUEL STICK IMPURITY SPECIFICATIONS 80
A.4 WEIGHTS OF FUEL BLOCKS AND COMPONENTS 80
A.5 RESULTS OF BURNUP CALCULATIONS 80
A.6 RADIOLOGICAL CHARACTERISTICS OF THERMAL POWER 84
A.7 REFERENCES 89

APPENDIX B: OXIDATION OF URANIUM DIOXIDE 91
B.1 REFERENCES 98

APPENDIX C: OXIDATION OF GRAPHITE 101
C.1 REFERENCES 107

FIGURES

Fig. 3.1. FSV standard fuel element 13

Fig. 3.2. HTGR coated fuel particles (100X) 15

Fig. 3.3. Peach Bottom Unit 1, core 1 fuel element 23

Fig. 4.1. Options for processing of HTGR spent fuel for repository disposal 30

Fig. 4.2. United States Yucca Mountain project reference spent fuel container 31

Fig. 4.3. Example HTGR spent fuel container 32

Fig. 7.1. HTGR reprocessing flow sheet 60

Fig. 7.2. Solvent extraction processing and oxide conversion 62

Fig. A.1. Control fuel elements and surveillance control element 81

Fig. A.2. Decay heat for FSV spent fuel. (Basis: 1 MTIHM irradiated to 100,000 MWd/MTIHM) 88

Fig. B.1. Air oxidation of UO_2 to U_3O_7 as a function of temperature 97

Fig. C.1. Oxidation of graphite at an oxygen pressure of 0.1 atm 104

TABLES

Table 3.1. Historical and projected spent fuel discharged from the FSV HTGR 18

Table 3.2. Quantities of radioactive nuclides in HTGR fuel 19

Table 3.3. Production of ^{14}C in graphite and fuel of HTGRs 21

Table 3.4. Estimated number of canisters required for repository disposal of various non-LWR and special LWR spent fuels 26

Table 8.1. Estimated requirements for now and future options 70

Table A.1. FSV fuel element component weights 82

Table A.2. Sample of fuel accountability data 83

Table A.3. Radioactivity of FSV reactor spent fuel 85

Table B.1. Oxidation rate of UO_2 to U_3O_7 96

Table C.1. Graphite oxidation studies 105

ABSTRACT

This report describes the options that can reasonably be considered for disposal of high-temperature gas-cooled reactor (HTGR) fuel in a repository. The options include whole-block disposal, disposal with removal of graphite (either mechanically or by burning), and reprocessing of spent fuel to separate the fuel and fission products. The report summarizes what is known about the options without extensively projecting or analyzing actual performance of waste forms in a repository. The report also summarizes the processes involved to convert spent HTGR fuel into the various waste forms and projects relative schedules and costs for deployment of the various options.

Fort St. Vrain Reactor fuel, which utilizes highly-enriched ^{235}U (plus thorium) and is contained in a prismatic graphite block geometry, was used as the baseline for evaluation, but the major conclusions would not be significantly different for low- or medium-enriched ^{235}U (without thorium) or for the German pebble-bed fuel. Future U.S. HTGRs will be based on the Fort St. Vrain (FSV) fuel form. The whole block appears to be a satisfactory waste form for disposal in a repository and may perform better than light-water reactor (LWR) spent fuel. From the standpoint of process cost and schedule (not considering repository cost or value of fuel that might be recycled), the options are ranked as follows in order of increased cost and longer schedule to perform the option: (1) whole block, (2a) physical separation, (2b) chemical separation, and (3) complete chemical processing.

1. INTRODUCTION

The purpose of this report is to (1) present the options for treating high-temperature gas-cooled reactor (HTGR) spent fuel for disposal in a repository and (2) to provide a preliminary evaluation of the feasibility of these options and a comparison of their relative advantages and disadvantages.

1.1 OBJECTIVES

The objectives of the assessment described in this report were to address the alternative waste disposal strategies that are reasonably possible for disposing of HTGR fuel, to set forth the processing steps that would be required for each, to assess the general status of the technology for accomplishing the processing, and to assess costs and schedules of various elements (e.g., development, pilot-scale work, capital facilities and equipment, and production operations) of the infrastructure required to bring each option to realization.

1.2 SCOPE

This report covers HTGR fuels that have been, and might again be, produced in the United States (U.S.) which are based on the prismatic fuel design. The chemistry and materials properties of prismatic fuel are very similar to the other major option for fuel geometry, pebble-bed fuel, which is the design on which German HTGRs are based. Thus, the principles applied in this report would, in general, apply to pebble-bed fuel as well as the prismatic fuel. The report covers two scenarios: a **now** scenario, representing the present situation with no future deployment of HTGRs, and a **future** scenario, representing a deployment of HTGRs at a level an order of magnitude greater than the **now** scenario. Any future defense production reactor capability is assumed to be bounded as a case by the **future** scenario. Future commercial power reactor deployment could exceed the **future** scenario by an additional order of magnitude.

1.3 BASIS OF THE ASSESSMENT

The assessment relied primarily upon the collective judgment of the authors, most of whom were previously substantial contributors and leaders in the development of fuel technology and processing technology for HTGR fuels. The assessment is, therefore, largely based on the substantial body of data and information from fuel cycle development that occurred until the early 1980s when most fuel cycle work in this country was terminated. In addition, some other information on fuel performance and properties of materials that has been published since then was used.

The assessment was necessarily limited by the resources and time available for the study. Therefore, the amount of effort expended is a limitation on how the study can be used. The authors have summarized what they already knew or what is readily available from the literature. Some cursory analyses were performed when it was possible to do so without extensive effort. Extensive analyses, such as would be necessary to prove the basis and validity of suggested courses of action for placing HTGR fuel in a repository, were not undertaken. Considering these limitations, it is proper to use the report as a basis for alternatives that should be considered for more in-depth study and analysis and as a guide to pertinent factors.

1.4 ASSUMPTIONS

It was assumed that the HTGR fuel to be treated or processed would be similar to Fort St. Vrain (FSV) fuel. It was also assumed that any necessary development could be carried out at existing facilities and that development costs would be limited to equipment and studies to obtain essential data. For full-scale processing operations, it was assumed that new processing facilities (and casks) would be required. Further, it was assumed that suitable facilities would exist at the future repository for unloading and placement of the spent fuel; therefore, costs at the repository were not addressed. However, parameters having a significant bearing on repository design, such as thermal load and volume occupied per unit

of fuel, were considered in developing the recommended courses of action. FSV fuel was used as the baseline for this preliminary evaluation of the options for spent fuel disposal.

1.5 UNIQUE ASPECTS OF HTGR FUEL

The fuel used in HTGRs most obviously differs from light-water reactor (LWR) fuel in that it is contained in massive quantities of graphite. Of equal importance, the fuel consists of small particles (spheres of the order of 0.5-mm diam) of uranium oxide or carbide. The particles are coated with thin layers of pyrolytic carbon (pyrocarbon) and silicon carbide, which serve as tiny pressure vessels to contain fission products and fuel. In FSV fuel elements, the coated particles are bound in a carbonized matrix which forms fuel rods that are loaded into large graphite prisms. The large graphite prisms (or blocks) are the physical forms that are handled in reactor loading and unloading operations. Existing HTGRs, such as the FSV reactor, were based on the thorium fuel cycle in which fissile ^{233}U is produced from ^{232}Th. In this case, there were "fertile" particles containing only thorium, as well as "fissile" particles. Similar concepts with two-particle systems can also be used for the uranium-plutonium (U-Pu) cycle. For a once-through fuel cycle, there would be no need for separate fissile and fertile particles, except for utilizing fertile particles to optimize core design.

The solid graphite fuel form, which is capable of operating at very high temperatures (up to approximately 1200° C during normal reactor operation and up to 1600°C during short-term, severe accidents) in the reactor, may take any of a variety of physical shapes. Three fuel-bearing configurations have been used in HTGRs: long, slender graphite prisms (in Peach Bottom-1); graphite spheres about 6 cm in diam in the German arbeitsgemeinschaft versuchsreaktor GmbH (AVR) and thorium high-temperature reactor (THTR); and hexagonal graphite prisms 35-cm wide and 76-cm long (in FSV). In the case of the 6-cm spheres, the fuel particles are dispersed uniformly in the sphere, except in the outermost layer of the sphere that is a protective region of unfueled graphite. In the case of the prism-shaped fuel, the fuel particles are first bound into rods that are subsequently carbonized. These fuel rods are placed into holes drilled in the prism.

Coating the fissile particles with two layers of pyrolytic carbon with a silicon carbide layer sandwiched in between makes them very resistant to failure during reactor operation and, thus, makes for a very clean-operating reactor—even at very high temperatures. On the other hand, the carbon and silicon carbide coatings on the spheres and the graphite matrix in which they are bound make this fuel form incompatible with conventional LWR fuel head-end reprocessing techniques. LWR head-end reprocessing consists of cutting through the metal cladding on the UO_2 pellets and then dissolving the spent fuel directly in nitric acid. Thus, a radically different head-end treatment is necessary for HTGR fuel if the spent fuel is to be placed into solution. However, the subsequent solvent extraction operations are not substantially different from the conventional Purex process.

2. INSTITUTIONAL ISSUES

2.1 REPOSITORY WASTE ACCEPTANCE CRITERIA

Waste acceptance criteria for the presently planned underground waste disposal facilities have been conceived primarily with the large volume waste forms in mind, although it has been recognized that there are a number of less common forms of spent fuel that must be accommodated. While the criteria were made quite general to cover as many unanticipated situations as possible, the special case of spent HTGR fuel was not specifically considered.[1] Therefore, the disposal criteria must be examined carefully to understand their implication for HTGR fuels.

In the U.S. there are three levels of standards and regulations that determine whether a particular waste form can be accepted by a high-level waste (HLW) repository for disposal. At the top level are the U.S. Environmental Protection Agency (EPA) standards of performance (40 CFR 191) applicable to any disposal method for HLW or spent fuel. Next are the U.S. Nuclear Regulatory Commission (NRC) implementing regulations (10 CFR 60), that are designed to meet the EPA standards for the disposal of spent fuel and HLW in a geological repository. Finally, the waste acceptance criteria defined by U.S. Department of Energy (DOE), the repository operator, are designed to meet the NRC regulations. The EPA standards and NRC regulations are published, but the DOE waste acceptance criteria for spent fuel are still under development. Preliminary waste acceptance criteria have been published for borosilicate glass from the Savannah River site[2] and from the former commercial reprocessing facility located at West Valley.[3]

The existing standards and regulations include three requirements that might impact acceptance of whole HTGR fuel blocks: (a) allowable release rates of radionuclides to the environment, (b) regulations on organics, and (c) regulations on combustibility of wastes.

EPA standards (10 CFR 191.13) limit the allowable releases of radionuclides from the repository to the accessible environment in terms of curies of specific radionuclides per 1,000 metric tons of heavy metal (MTHM) over a period of 10,000 years after placement of the waste in the repository. NRC regulations (10 CFR 60.113:a:ii:B) limit releases from the "engineered barrier system" to 10^{-5} fraction per year of the radionuclide inventory that exists in the repository at 1000 years after repository closure. While the EPA standards refer to the performance of the entire repository system and the NRC regulations refer to the engineered waste package, demonstrating compliance is greatly simplified with a good waste form. The performance of HTGR spent fuel without waste packaging is compared in this report to the EPA standards and the NRC regulations and is also compared to LWR fuel, which provides an informal standard for measurement of performance of other waste forms. The required waste package and the larger engineered barrier system can significantly improve performance over that of the fuel form itself to meet regulatory requirements.

The potential repository site currently being investigated for the U.S. is at Yucca Mountain in Nevada. This is a non-typical site in that the repository is above the water table (dry) and the repository horizon is a chemically oxidizing environment. The site is not yet characterized, but available information indicates an air-like chemical environment for the waste and waste package, subject to possible flooding or water percolation. It is under these conditions that long-term integrity of the waste must be ensured.

The NRC limits combustible radioactive wastes (10 CFR 61.135:C:3) in a repository. Specifically, "all combustible radioactive wastes shall be reduced to a noncombustible form unless it can be demonstrated that a fire involving the waste packages containing combustibles will not compromise the integrity of other waste packages, adversely affect any structures, systems, or components important to safety, or compromise the ability of the underground facility to contribute to waste isolation." The graphite and carbon in HTGR fuel must be evaluated in this context.

2.2 CARBON-14

An unusual aspect of HTGR spent fuel is the relatively high level of the isotope ^{14}C as compared to LWR spent fuel. The ^{14}C isotope is produced by neutron irradiation of nitrogen $^{14}N(n,p)^{14}C$, and of carbon $^{13}C(n,gamma)^{14}C$. In an HTGR fuel assembly, the presence of atmospheric nitrogen introduced during the fabrication of the fuel and graphite matrix, and the rare ^{13}C isotope that is naturally present in the graphite, represent sources of ^{14}C production in irradiated assemblies. The relatively long half-life of ^{14}C (5730 years) makes it a potential long-term health hazard. Combustion of the graphite could convert any ^{14}C present into $^{14}CO_2$, which could potentially pose a radiation exposure hazard to the general public if released into the atmosphere.

The concentration limit for Class C low-level radioactive waste (LLW) is 8 Ci/m^3, the Class A LLW limit is 0.8 Ci/m^3. On the basis of ^{14}C concentration alone, it appears that the graphite block has the potential, dependent upon fission product contamination, of qualifying as Class C LLW.

2.3 APPLICABLE RADIATION PROTECTION STANDARDS

In the recent revision of radiation protection standards for the public in 10 CFR 20,[4] the NRC established new limits on average annual concentrations of radionuclides in gaseous effluents at the boundary of any unrestricted area around a licensed commercial facility. In 40 CFR 61, the EPA promulgated standards for airborne emissions of radionuclides under authority of the Clean Air Act.[5] In contrast to the concentration limits in 10 CFR 20, the dose limit in 40 CFR 61 applies where members of the public reside or could otherwise receive exposures.

2.4 DISPOSAL OF RADIOACTIVE PROCESSING WASTE

If the graphite block is not separated from the spent fuel, the spent fuel elements must, of course, be disposed at the proposed repository.

HTGR fuel elements do provide the option of separating the graphite from the fuel rods or particles, thus enabling the consideration of using a less expensive method for disposal of the graphite. However, if the sum of the ^{14}C concentration and the fission product contamination exceeds the limit for shallow land disposal as LLW, there is no need to separate the fuel from the graphite because the repository (Yucca Mountain) is the only place that would be authorized for its disposal. The EPA standards applicable to the repository are undergoing revision, but limits on cumulative releases for the HLW repository are not expected to be changed. These releases are 100 Ci of ^{14}C accumulated over 10,000 years per 1,000 MTHM in spent fuel exposed to 25,000 to 40,000 MWd of burnup, or the HLWs from the same amount of fuel.

If graphite waste from an HTGR fuel cycle is classified as LLW, then near-surface disposal may be an option. If the graphite is separated from the fueled microspheres, near-surface disposal may be acceptable, assuming that the fuel has performed with such integrity that the graphite is not significantly contaminated with fission products or actinides. If the carbon dioxide (CO_2) produced by burning the graphite was converted to a solid form such as calcium carbonate ($CaCO_3$), the $CaCO_3$ could be disposed as LLW. The EPA is currently developing environmental standards for disposal of LLW in 40 CFR 193 that would apply to HTGR LLW wastes.

2.5 SAFEGUARDS: ISSUES RELATED TO NON-WEAPONS STATES

A criticism often leveled at the once-through fuel cycle for LWRs is that the disposal of fuel elements in effect constitute a "plutonium mine" and, therefore, pose a greater proliferation risk than fuel cycles that recover plutonium by reprocessing and then recycle it back into reactors. This criticism, which has importance in the context of non-weapons states using the once-through fuel cycle for their power reactors, has some merit. The same kind of considerations apply to the several fuel cycle options for HTGRs. If the fuel blocks (or spheres, as in the case of fuel of the type used in the German program) are stored whole, or if the bulk of the graphite is removed and the separated fuel particles stored, then the

possibility exists of subsequently recovering the contained fissile material for use in weapons production.

While clandestine recovery of plutonium should not be a problem for HTGR fuels stored as waste in a U.S. federal repository, it is conceivable that it could be a problem if the U.S. approach to HTGR spent fuel management is adopted by non-weapons states. Several countries are considering HTGRs for power production and process heat, and introduction of HTGRs by the U.S. could prompt those countries to build HTGRs. Unless these countries practiced fuel reprocessing they could accumulate over time a significant amount of plutonium in the fuel blocks or separated particles stored as waste. However, the "quality" of the plutonium produced in commercial HTGRs is relatively low because of the high content of ^{240}Pu and ^{242}Pu. This high plutonium content is due to the high fuel exposure of approximately 100,000 MWd/MTIHM (metric tons initial heavy metal) and the relatively high neutron energy spectrum that increases the probability that ^{239}Pu will be transmuted to ^{240}Pu.

Assuming that the HTGRs displaced LWRs that would have otherwise been built in these non-weapons states, the issue becomes, Which is the greater proliferation risk, disposing of LWR fuel or disposing of HTGR fuel in a waste repository? Because HTGR fuel is substantially more difficult to reprocess than LWR fuel and because the quality of the plutonium is relatively low, HTGR spent fuel storage can be expected to pose less risk. However, a more careful study is in order if large scale deployment of HTGRs is planned.

2.6 REFERENCES

1. "Design Criteria For The Waste Package," 10 CFR 60.135, Criteria for the Waste Package and Its Components, (1991), paragraph (3).

2. U.S. Department of Energy, *Waste Acceptance Preliminary Specifications for the Defense Waste Processing Facility High-Level Waste Form*, Revision 1, DOE/RW-0260 (July 1989).

3. U.S. Department of Energy, *Waste Acceptance Preliminary Specifications for the West Valley Demonstration Project High-Level Waste Form*, Revision 1, DOE/RW-0261 (January 1990).

4. U.S. Nuclear Regulatory Commission, 10 CFR Parts 2, 19, 20, 30, 31, 32, 34, 35, 40, 50, 61, and 70, Standards for Protection Against Radiation, Final Rule, Federal Register 56, 23360 (1991).

5. U.S. Environmental Protection Agency, 40 CFR Part 61, National Emission Standards for Hazardous Air Pollutants: Regulation of Radionuclides, Final Rule, Federal Register 54, 51654 (1990).

3. DESCRIPTION OF HTGR FUELS

3.1 INTRODUCTION

This chapter concentrates on FSV fuel for a number of reasons: more is known about it than other HTGR fuel; more of it exists than other HTGR fuel; it is the prototype for future HTGR fuel in the U.S.; and, even though future fuel will differ in some ways, FSV fuel embodies the essential characteristics of such fuel relevant to eventual disposal. The only other domestic HTGR, Peach Bottom-1, used a different configuration but the basic properties are similar to FSV fuel. In Germany, the pebble-bed configuration uses small spheres instead of large hexagonal prisms but, even here, the basic properties are similar to FSV fuel.

This chapter also describes some of the major differences between HTGR and LWR spent fuels. Since a future repository will be designed for LWR fuel, these differences may be quite important. Some of the more obvious differences are the presence of very large amounts of graphite in the HTGR, fuel in the form of silicon carbide-coated microspheres rather than zircaloy-encased pellets, and uranium present as the carbide rather than the oxide. Less obvious differences are the larger quantities of ^{14}C in HTGR fuel, and (for prior HTGRs) the eventual transition to the ^{233}U fuel cycle with its concomitant generation of ^{232}U. However, even these prior HTGRs were fueled with ^{235}U and not ^{233}U. Future HTGRs, as presently planned, will use only ^{235}U. (More information on future HTGRs is given in Sect. 3.5.)

Most of the information in this chapter was taken from Sect. 4, Non-LWR Spent Fuel, of the Characteristics Data Base of Potential Repository Wastes.[1] This data base drew heavily on data provided by the General Atomic Corporation,[2] the designers of the FSV reactor. Packaging and criticality aspects of FSV (and other non-LWR) spent fuel have been reported elsewhere.[3]

3.2 FORT ST. VRAIN FUEL

The FSV HTGR operated from 1979 to 1989. It had a rated power of 842 MW(t), but ran well below that rating for much of its lifetime. The reactor had low availability, which was primarily due to the many operating problems associated with the water bearings of the helium circulator, resulting in frequent water ingress into the primary circuit. A secondary reason for the low availability was the core oscillation problem that limited the core power to approximately 80% of design power. The core oscillation problem was eventually solved. The core was made up of 1482 hexagonal fuel elements stacked in 6 layers. The initial core contained 774 kg of U at 93.5% enrichment and 15,905 kg of thorium (Th). The fuel elements are surrounded by replaceable hexagonal reflector elements, around which are reflector blocks and reflector spacers that are all made of graphite.

3.2.1 Physical and Chemical Description of Fort St. Vrain Fuel

An FSV fuel element consists of a 280-lb hexagonal graphite block, 14.2-in. across the flats and 31.2-in. high. Each graphite fuel block (Fig. 3.1) contains 108 coolant channels and 210 fuel holes, all drilled from the top face of the element. The coolant holes extend through the element; the fuel holes extend to within about 0.3 in. of the bottom face. The fuel holes occupy alternating positions with the coolant channels in a triangular array within the element structure and contain the nuclear fuel. After the fuel is inserted in a fuel hole, the hole is sealed with a graphite plug cemented into place. The fuel itself is in the form of carbide particles coated with layers of pyrolytic carbon and silicon carbide (SiC), bonded together into fuel rods by a carbonaceous matrix material. The fuel bed contains a homogeneous mixture of two types of particles, called fissile and fertile. Fissile particles contain thorium and 93.5% enriched uranium; fertile particles contain only thorium. The important parameters of fuel particles are as listed below:

Parameter	Fissile	Fertile
Th/U (atomic ratio)	4.25	Th only
Particle composition	$(Th/U)C_2$	ThC_2
Average fuel particle diameter, μm	200	450
Average total coating thickness, μm	130	140

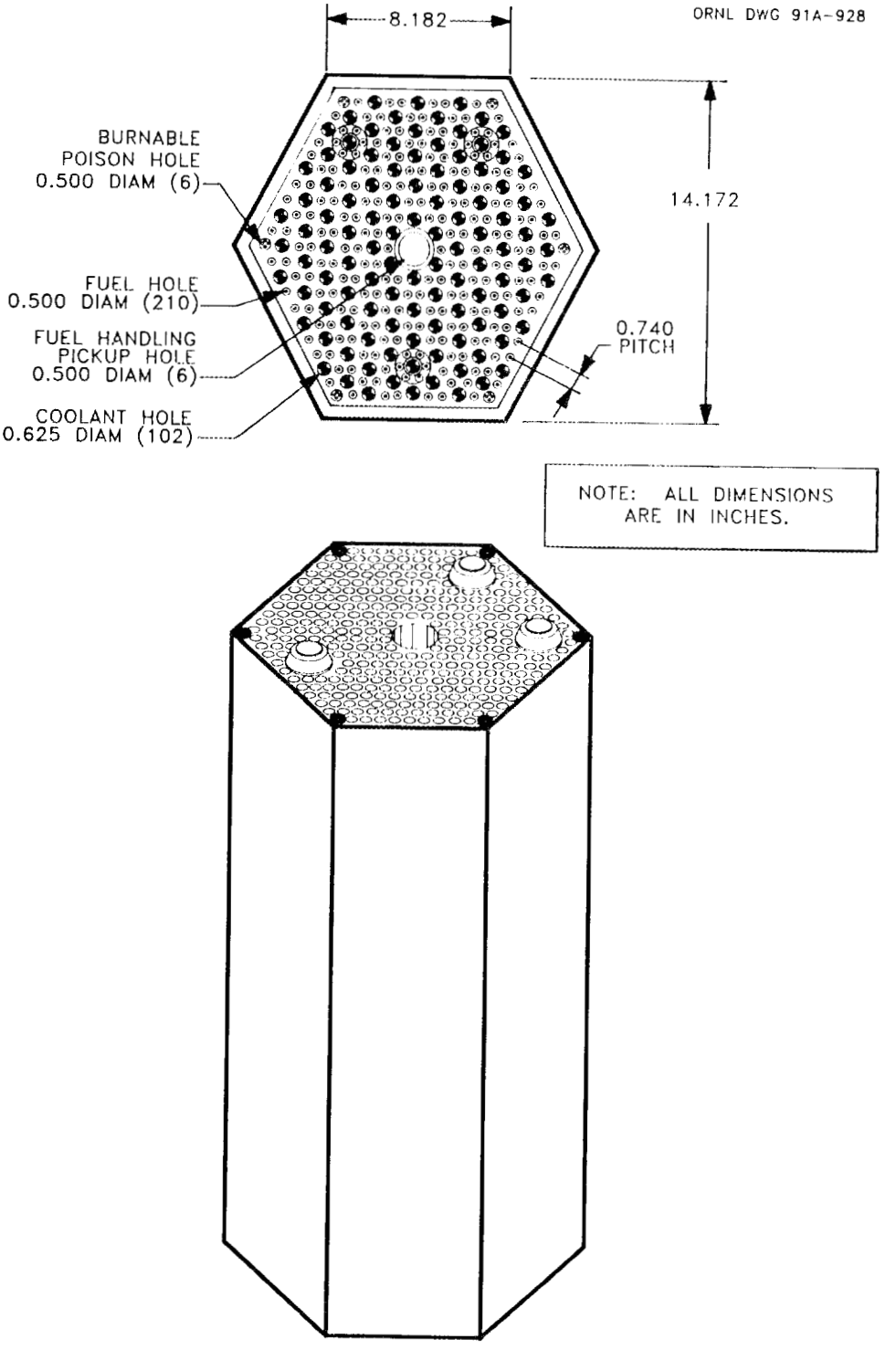

Fig. 3.1. FSV standard fuel element.

The irradiated fuel contains the initial components plus fission products, ^{233}U bred from ^{232}Th, other uranium isotopes, and a small quantity of plutonium and higher actinides. In the fertile particles, the fissile material is bred ^{233}U, while the fissile particles contain both residual ^{235}U and bred ^{233}U as fissile material.

The graphite blocks were machined from needle-coke graphite supplied by Great Lakes Carbon Company. Two types were used: H-327 in the initial core and H-451 in some test elements and replacement segments. These are high-quality isotropic graphites composed of relatively small crystallites. These graphites have been well-characterized. The H-451-type graphite will probably be used in future HTGRs. Although past feedstocks used to make H-451 may be in limited supply, H-451 quality graphite can be made from available petroleum feedstocks. Recently, the Japanese have introduced a graphite, designated IG-110, that might be considered for future HTGRs. It is a very high-grade, high-purity, small-crystallite graphite with superior dimensional and isotropic properties. IG-110 graphite is similar to Stackpole 2020 graphite made in the U.S. Both types of graphites are more expensive than the H-451-type graphite.

The fuel particles consist of spherical kernels of ThC_2 (fertile particles, TRISO-coated) and $(Th,U)C_2$ (fissile particles, TRISO-coated). These particles are coated, via a fluidized-bed, vapor-phase deposition process, with three fission-product-retaining layers of isotropic carbon; hence the name TRISO-coated (Fig. 3.2). The inner and outer layers are pyrolytic graphite, and the middle layer is SiC and is under compression from the outer graphite layer. There is a fourth layer called the "buffer," of porous carbon, next to the kernel of the fissile particles, to provide a volume for accumulation of fission product gases. Thus, each particle is a miniature pressure vessel of optimum geometry, designed to maintain its integrity during and after irradiation and during reprocessing until deliberately crushed. The SiC layer is highly resistant to both oxidation and moisture, even at extremely high temperatures.

The fuel cycle, as originally planned, included recycle of the fertile particles; thus, the size difference to allow separation of fissile and fertile particles by physical means. The original intent was that fissile particles would be taken to a high burnup and discarded intact (or

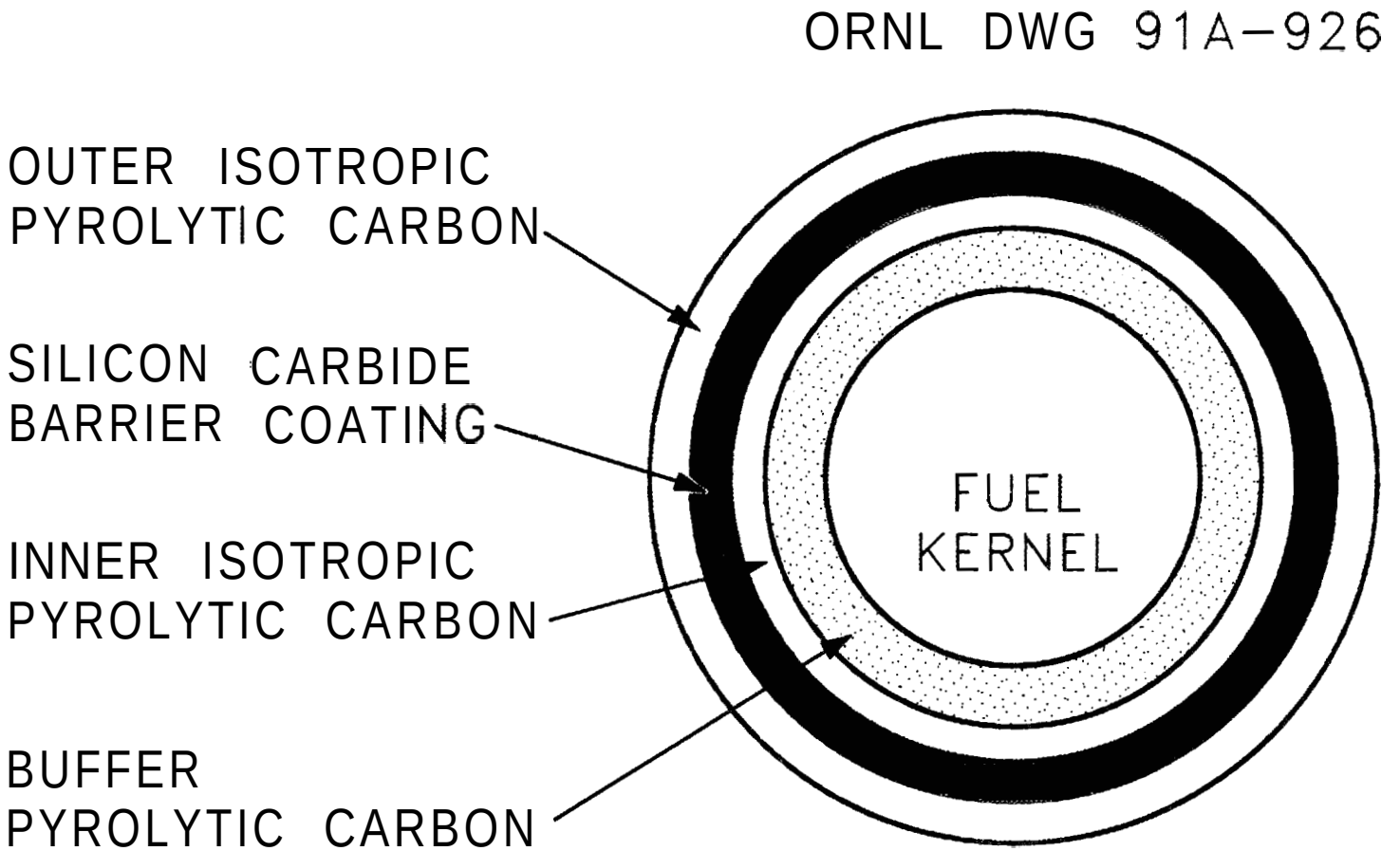

Fig. **3.2.** HTGR coated fuel particles (100X).

possibly reprocessed for one or two recycles, until the ^{236}U built up to an excessive level), while the fertile particles would be reprocessed and the ^{233}U separated chemically from the thorium (and fission products) and then refabricated into recycle fissile particles. Existing FSV fuel used only ^{235}U in the fissile particles because there was no recycled ^{233}U available (nor was there a remote refabrication facility, which is required for ^{233}U).

Fertile and fissile particles are blended and then molded into fuel rods 0.5 in. in diam and 2.0-in. long. A carbonaceous binder is used to form "green" rods that are subsequently carbonized by firing at a high temperature prior to insertion in the graphite blocks. A full-length fuel hole contains 15 fuel rods. In cases where fuel rods are carbonized in the graphite block, bonding of the fuel rods to the graphite may occur. However, for the FSV core, carbonizing the fuel rods was performed prior to placing the rods in the fuel block, and it was found that little bonding occurred between the rods and the graphite block during service in the reactor. As a result, fuel rods could be removed with minimal damage by "pushing" the rods out of the element after top and bottom plugs were removed or cut out.

Selected elements have fuel holes that also contain burnable poison. These burnable poison sticks consist of boron carbide particles, bonded together in a carbonaceous matrix analogous to the fuel rods.

The physical condition of the first three FSV discharge segments was determined by a nondestructive examination of various fuel elements after each set of elements was removed from the core. Nearly all of the elements had shrunk slightly in both axial and radial dimensions. However, the inspected elements were generally in good condition. Minor cracks, chips, and scratches were observed on some elements. Based on other tests, it is expected that 0.3 to 0.5% of the coatings in the elements discharged from the first three reloads may have failed. On later discharges, the failure rate is expected to be an order-of-magnitude lower. Nearly identical fuel particles from the AVR have measured failure rates lower than 0.008%.[4]

3.2.2 Quantities of Fort St. Vrain Fuel

Table 3.1 summarizes the discharge history of the FSV reactor, which has been shut down since August 1989. Prior to that, there were three refuelings of one segment each. Each segment is about one-sixth of the core. The complete core consists of 1482 fuel blocks. The refueling segments are not all the same size, and there were also some test elements that were removed at the time of the first reload. There are also solid graphite reflector blocks, both axially and radially. However, some reflector blocks contain boronated steel and nickel-based alloy canisters containing boronated graphite, and these will need to be disposed as whole blocks or processed prior to disposal. Disposition of these reflector blocks will probably be as LLW with ^{14}C as the principal radioactive contaminant.

The first 726 fuel blocks that were discharged are stored in a special convection-cooled facility built for that purpose at the Idaho Chemical Processing Plant (ICPP). At one time, it was planned to build an HTGR reprocessing pilot plant in Idaho, and FSV spent fuel would have been the feedstock. There is still unused storage space at the ICPP facility but, in 1988, the governor of Idaho blocked any further receipts of FSV fuel. This issue is now the subject of litigation. As this report went to press, the U.S. Court of Appeals in San Francisco had decided to allow the shipment of fuel to Idaho.

The FSV spent fuel elements currently stored at ICPP are in 0.25-in. thick carbon-steel canisters with a diameter of 18 in. and a length of 11 ft. They have ungasketed lids that are held in place by remotely operable clamps. Each canister contains four FSV elements. The current inventory of 726 elements thus requires 182 canisters. Information on the serial numbers of the elements and the canister numbers in which they are contained is available from the Idaho National Engineering Laboratory (INEL), which operates the ICPP.

If the final full-core discharge is also placed in canisters the size of those used at the ICPP, an additional 371 canisters will be required. As indicated elsewhere in this report, final repository disposal of intact blocks would require far fewer repository canisters if the blocks were stacked three or seven to a layer, or more than four layers high. The present canister

Table 3.1. Historical and projected spent fuel discharged from the FSV HTGR[a]

End of calendar year	Number of fuel assemblies discharged		Mass of fuel discharged (MTIHM)	
	Annual	Cumulative	Annual	Cumulative
1979	246[b]	246	2.80	2.80
1980	0	246	0.00	2.80
1981	240	486	2.77	5.57
1982	0	486	0.00	5.57
1983	0	486	0.00	5.57
1984	240	726	2.85	8.42
1985	0	726	0.00	8.42
1986	0	726	0.00	8.42
1987	0	726	0.00	8.42
1988	0	726[c]	0.00	8.42
1989	126[d]	852	1.32	9.74
1990	615[d,e]	1,467	6.47	16.21
1991	741[f]	2,208	7.49	24.00

[a]From DOE/RW-0006, Rev. 6, p. 34 (October 1990).

[b]This refueling replaced 246 spent fuel elements made up of 240 standard fuel elements and 6 fuel test elements.

[c]All spent fuel discharged prior to December 31, 1988, is located at the Idaho Chemical Processing Plant (ICPP).

[d]Fuel removed from the core in 1989 and 1990 remains on-site in temporary storage wells until shipment to the ICPP can be accomplished or an independent spent fuel storage installation is built at Fort St. Vrain.

[e]1990: 330 fuel blocks have been removed from the core prior to February 28, 1990.

[f]It is expected that the entire core will be defueled by the end of 1991.

size used at the ICPP is smaller than that planned for vitrified HLW (24 in. by 10 ft) or for LWR spent fuel (26 in. by 15.6 ft). Stacking FSV blocks three to a layer requires a 36-in. diam cask, while seven to a layer requires a 47-in. diam cask.

3.2.3 Radiological Properties of Fort St. Vrain Fuel

The radioactive nuclide composition has been calculated for irradiated HTGR fuel, assuming a burnup of 100,000 MW/MTIHM, and is summarized in Table 3.2 for three time periods: 10 years, 100 years, and 1000 years after discharge. A detailed listing is given in Appendix A, along with other decay times. The maximum burnup actually achieved at FSV is 52,000 MWd/MTIHM, and the average value is in the range of 30,000 to 35,000 MWd/MTIHM.

Table 3.2. Quantities of radioactive nuclides in HTGR fuel

	Nuclide quantity (Ci/MTIHM)		
	10 years after discharge	100 years after discharge	1,000 years after discharge
Actinides (and daughters)	14,500	5,800	4,400
Fission products	967,000	111,000	3
Carbon-14	20	20	18
Tritium	80	<1	~0

The production of the activation products ^{14}C and tritium is of potential concern for some disposal and reprocessing scenarios and is explained further.

Carbon-14. There are two major neutron-induced reactions that produce ^{14}C in an HTGR:

^{14}N (n,p) ^{14}C

^{13}C (n,gamma) ^{14}C

Nitrogen is contained in the fuel element in small quantities due to its processing history. The nitrogen is present either in adsorbed form in the graphite material, as chemically bound, or as elemental nitrogen entrapped in voids in the fuel element material. The nitrogen that serves as the precursor for ^{14}C generation is the residual nitrogen remaining in the fuel element after loosely bound nitrogen has been desorbed into the coolant circuit and gettered in the coolant cleanup circuit. ^{13}C occurs naturally in all carbon material with an abundance of 1.11%.

A careful study of ^{14}C production in HTGRs was performed by Davis.[5] The results of this study have been abstracted from Davis' work and are shown in Table 3.3. The nitrogen impurity was assumed to be at a level of 30 ppm in the graphite and was calculated to be the source of more than 75% of the ^{14}C. The presence of ^{13}C, primarily in the fuel block, accounted for most of the remainder ^{14}C production.

Measured values of nitrogen in HTGR fuel assemblies have been reported,[6] and typically range from 6–12 ppm, thus implying that actual overall ^{14}C levels may be lower by a factor of two to five. Snider and Kaye[7] assumed a nitrogen impurity value of 10 ppm and otherwise obtained results that are comparable and scalable to the results cited in Table 3.3.

The NRC LLW regulations, stated in 10 CFR 61, place an upper limit on the volumetric level of ^{14}C in Class C LLW at 8 Ci/m^3. The ^{14}C quantities shown in Table 3.3 for the graphite block are equivalent to a value of approximately 3 Ci/m^3. Thus, if the graphite block were physically separated from the fuel, and was uncontaminated (or subsequently decontaminated) of actinides and fission products, it would be permissible, by current regulations, to dispose of the graphite block as Class C LLW.

The calculations in Table 3.3 assumed a fuel burnup of 100,000 MWd/MT (metric tons). However, all FSV fuel experience lower burnups, typically less than 35,000 MWd/MT. It should be noted that graphite blocks exposed to less than 25,000 MWd/MT burnups have the potential to qualify as Class A LLW, although the fission product contamination limits are more stringent than Class C LLW levels by a factor of ten.

Table 3.3. Production of ^{14}C in graphite and fuel of HTGRs[a]

	Graphite in fuel block	Graphite in reflector blocks	Fuel (UC_2 + ThC_2)	Total
Impurity content:				
Nitrogen (ppm)	30	30	25[b]	
Material in core (MT/MTIHM)	10.93	1.77	1.0	
Quantity of element in core (g/MTIHM)				
Carbon	1.093×10^7	1.77×10^6	0.0906	
Nitrogen	3.28×10^2	3.54×10^1	2.50×10^1	
^{14}C at 160 d after discharge of fuel (Ci/MTIHM), from				
Carbon	3.69	<0.60		
Nitrogen	12.58	<2.04	0.959	
Total ^{14}C: (Ci/MTIHM)	16.27	<2.63	1.167	<19.9

[a]These results are from ref. 5.
[b]Assumed to be the same as LWR fuels.

Tritium. The reported level of tritium results from the reaction

$$^{6}Li\ (n,alpha)\ ^{3}H.$$

Lithium is believed to be present in the graphite block at an impurity level of only 0.005 ppm, but tritium production is still calculated to be nontrivial due to the relatively high neutron cross-section for this reaction. Tritium has a half-life of 12.3 years and, thus, is not a factor in long-term radiological considerations. The calculated value of 80 Ci/MTIHM for HTGR fuel at a burnup of 100,000 MWd/MTIHM[8] translates, for the graphite block, into a tritium value of approximately 15 Ci/m^3. This is well below the tritium limit for Class A LLW of 40 Ci/m^3. Thus, the presence of tritium as an activation product should not constrain the choice of disposal options.

3.3 PEACH BOTTOM-1 REACTOR FUEL

The Peach Bottom-1 HTGR operated from 1966 to 1974. It was rated at 115 MW(t). It utilized a 12-ft-long cylindrical fuel element 3.5 in. in diam composed largely of graphite, containing about 1.8 kg of uranium and thorium (Fig 3.3). These heavy metals were present as carbon-coated particles that were formed into compacts by addition and sintering of carbonaceous materials. The heavy-metal loading in this reactor, about 1.4 MT, was contained in 804 elements. The design burnup for this fuel was ~73,000 MWd/MTIHM. However, excessive fuel failures that occurred during operation of Core 1 resulted in removal of that core at about half the design burnup. The fuel failure was attributed to the fuel particle coating system, which consisted of a single pyrocarbon coating with no buffer layer. This system was modified for the second core to a two-layer system including a buffer layer (termed BISO coating) that performed satisfactorily and reached design burnup. The reactor was shut down at this point.

Most of the fuel from both cores is now located at INEL in 46 24-in.-diam baskets (Core 1) and 44 18-in.-diam baskets (Core 2). A small quantity (10 elements) is located at Oak Ridge National Laboratory (ORNL). The uranium and thorium within the fuel compacts are in the form of carbides uniformly dispersed as coated particles in the graphite matrix.

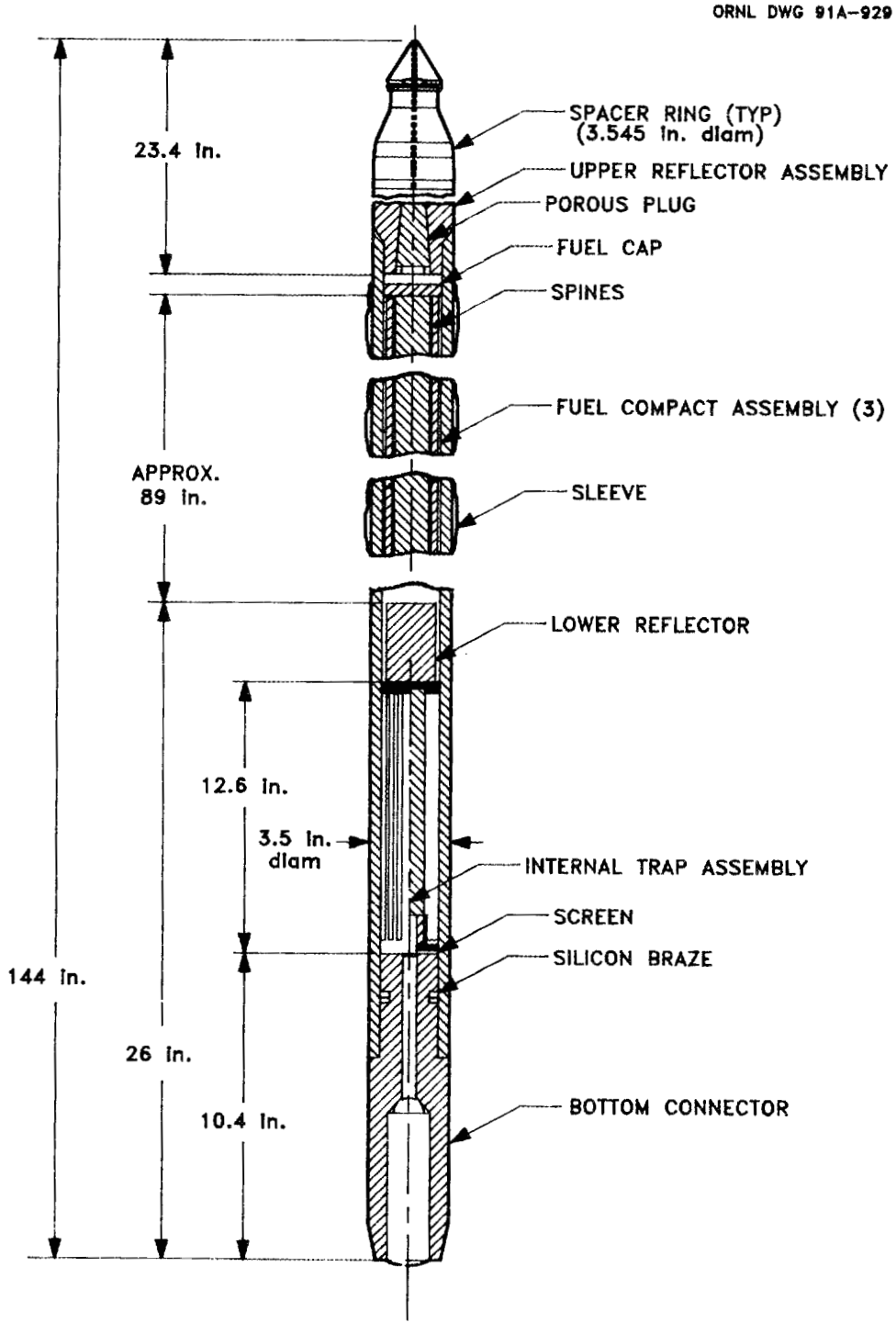

Fig. 3.3. Peach Bottom Unit 1, core 1 fuel element.

For Core 1, the particle coating is monolithic, laminar, pyrolytic carbon obtained by sintering at 1800°C. The coated particles are between 210 and 595 μm in diam, with coating thicknesses of 55 $\pm$ 10 μm.

The Core 2 fuel elements are essentially the same as the Core 1 elements. The major design difference is in the coated particles. The coating of the Core 2 fuel and fertile particles consisted of an inner, low-density buffer carbon coating surrounded by an outer isotropic layer of pyrolytic carbon. The total coating thickness was between 90 and 130 μm. The coated particles were ~340 and 630 μm in diam, respectively, for the fissile and fertile particles.

3.4 COMPARISON TO OTHER NON-STANDARD FUELS

In the context of HLW disposal, HTGR fuel is part of a larger category of non-standard fuels that must be accepted by the repository. This category of non-standard fuels includes:[3]

1. Special LWR fuels, specifically
   a. those covered under the DOE/utility contract, which includes several categories, one of which is Category F-2 (identified as leakers);
   b. massively failed fuel, of which the TMI-2 core is our only example; and
   c. miscellaneous LWR fuels left over from various test and hot cell examination projects, most of which are stored at INEL or Savannah River Laboratory (SRL).

2. HTGR fuels.

3. Other non-LWR spent fuels, such as educational and research reactor fuels and test reactor fuels, such as TRIGA, PULSTAR, and the Shippingport LWBR.

All three of these classes of LWR spent fuels include (or consist of) potentially troublesome waste forms, and the 10^{-5} fraction per year release limit exacerbates this problem. For example, LWR leakers may require special packaging, and the TMI-2 core and miscellaneous LWR fuels will almost certainly require special packaging. In addition, non-LWR spent

fuels, which include metals, carbides, hydrides, and other semi-exotic forms, will also require special packaging if they cannot be processed.

The "special packaging" alluded to in the preceding paragraph has not yet been designed. For that matter, the necessary canister containment specifications have yet to be defined. However, it seems clear that, in the absence of reprocessing capabilities (which would convert spent fuels to vitrified HLW), special packaging will have to be the answer to disposal requirements. It is not unreasonable to believe that such packaging can be designed and constructed.

Table 3.4 is an abbreviated summary listing of all the non-LWR and special LWR fuels (except leakers), all of which may require special packaging. This list was taken from a study that made basic assumptions regarding criticality and chemical reactivity and then estimated the number of canisters that would be required for repository disposal.[3] Two sizes of canisters were assumed in that study: 24 in. by 12 ft and 28 in. by 15 ft. A total of 952 to 1392 canisters was estimated, of which 554 are for FSV fuel and 138 are for Peach Bottom-1 fuel. For comparison, it is projected that there may be 15,000 canisters of vitrified HLW and 45,000 canisters of LWR spent fuel by 2020. The FSV estimate was based on four blocks per canister. For larger canisters, proportionately fewer would be required. For a "3 by 6" canister, (i.e., six layers of three blocks each), 31 canisters would hold all the FSV fuel.

The thermal output of 5-year old FSV fuel packaged 18 blocks per canister would be about 450 W. This is far less than that for LWR fuel, for which the upper limit is about ten times higher. FSV thermal output is in the same range as vitrified HLW, estimated at 300 to 800 W per canister.

3.5 FUTURE HTGRS

Future HTGRs will be based on ^{235}U fuel. The accompanying ^{238}U will be the source of ^{239}Pu (as in LWRs), which adds to the in situ fissile content. For commercial power HTGRs, the enrichment will probably be no higher than 20% in response to nonproliferation

Table 3.4. Estimated number of canisters required for repository disposal of various non-LWR and special LWR spent fuels

	Total number of fuel assemblies as of 2020	Estimated fuel assemblies per canister	Estimated number of canisters required
24-in. diam × 12-ft canisters			
Fort St. Vrain	2214	4	554
Peach Bottom-1	1639	12	138
Special LWR & other non-LWR fuels	6141	12 to 112	200
28-in. diam × 15-ft canisters			
Special LWR & other non-LWR fuels	500	1 to 8	60 to 500

constraints. This also allows extensive generation of ^{239}Pu, which is more beneficial in HTGRs than in LWRs.

A defense production HTGR will probably use at least some highly enriched ^{235}U to compensate for the presence of lithium target material, which acts as a neutron poison. If plutonium production is also an objective, lower ^{235}U enrichment or depleted uranium blankets will be needed.

Based on studies conducted after the FSV fuel composition was defined,[9] future HTGR fuel will use a mixture of 15% carbide and 85% oxide in the fissile particles. This composition gives improved fuel performance. The proved TRISO coating (over a buffer layer) will be used for future fuel. In this country, the prismatic block design will be used.

Several conceptual design studies are currently underway for both a modular commercial power HTGR and a defense production HTGR. These new designs will undoubtedly incorporate changes from the FSV design, but the basic fuel design will still be based on TRISO-coated fuel particles contained in a hexagonal graphite block.

3.6 REFERENCES

1. U.S. Department of Energy, *Characteristics of Spent Fuel, High-Level Waste, and Other Radioactive Wastes Which May Require Long-Term Isolation*, DOE/RW-0184, Vols. 1-6, December 1987; Vols. 7-8, June 1988.

2. R. P. Morissette and N. Tomsio, *Characterization of Fort St. Vrain Fuel*, ORNL/SUB-86022047/1, Martin Marietta Energy Systems, Inc., Oak Ridge National Laboratory, October 1986.

3. R. Salmon and K. J. Notz, *Non-LWR and Special LWR Spent Fuels: Characteristics and Criticality Aspects of Packaging and Disposal*, ORNL/TM-11016, Martin Marietta Energy Systems, Inc., Oak Ridge National Laboratory, January 1990.

4. H. Nabielek and D. G. Martin, "Some Studies of the Failure of Irradiated Triso-Coated Fuel Particles During Their Anneal at High Temperatures," *J. Nucl. Mat.* **120**, 345-48 (1984).

5. W. Davis, Jr., "Carbon-14 Production in Nuclear Reactors," *Management of Low-Level Radioactive Wastes*, Vol. 1, 151-191, ed. M. W. Carter, A. A. Moghissi, and B. Kahn, Pergamon Press (1979).

6. L. H. Brooks, et al., *Carbon-14 in the HTGR Fuel Cycle*, GA-A13174 (Nov. 1974).

7. J. W. Snider and S. V. Kaye, "Process Behavior and Environmental Assessment of C-14 Releases from an HTGR Fuel Reprocessing Facility," *Proceedings, ANS-AIChE Conference on Controlling Air-Borne Effluents from Fuel Cycle Plants* (August 1976).

8. S. B. Ludwig, Oak Ridge National Laboratory, Oak Ridge, Tennessee, personal communications to G. E. Michaels.

9. F. J. Homan, et al., "Stoichiometric Effects on Performance of High-Temperature Gas-Cooled Reactor Fuels from the U-C-O System," *Nucl. Technol.* **35**, 428–41 (September 1977).

4. OVERVIEW OF OPTIONS

There are several possible options to put HTGR spent fuel into a form that will be acceptable for repository disposal. The preferred option depends on the waste acceptance criteria for the repository, availability of LLW disposal for graphite, overall economics, and overall risks. Frequently, the minimum processing that yields an acceptable waste form also gives the lowest costs as well as the simplest process and the least risk. The diagram in Fig. 4.1 shows the options that were considered in this study.

4.1 WHOLE-BLOCK DISPOSAL

Starting with an HTGR spent fuel element (Fig. 4.1), the first question is, Is whole block HTGR spent fuel disposal acceptable? If the answer is yes, the HTGR spent fuel can be disposed of in the repository after suitable packaging. This leads to the next question, Is overpack, coating or encapsulation required? The answer to this question determines if direct disposal of the HTGR spent fuel block is allowed. If direct disposal is acceptable, the spent fuel can be placed in waste canisters as is proposed for LWR spent fuel. Figure 4.2 shows the planned Yucca Mountain spent fuel waste canister for LWR spent fuel. Figure 4.3 shows a conceptual canister of similar dimensions for HTGR spent fuel and two larger canister sizes for HTGR spent fuel. Repository waste canister size is limited by spent fuel decay heat load. If too much spent fuel is put into a canister, the waste or nearby rock will overheat. HTGR spent fuel has a lower decay heat load by volume of a factor of 5 to 10; therefore, larger, more economical waste packages might be an option for the direct spent fuel disposal scenario. The optimum canister size is determined by handling and economic considerations within the limits imposed by the heat load.

If direct disposal is not allowed, the option exists to "overpack, coat, or encapsulate" whole HTGR spent fuel blocks to improve the disposal performance of the waste before packaging. These two options for whole-block disposal are discussed in detail in Sect. 5.

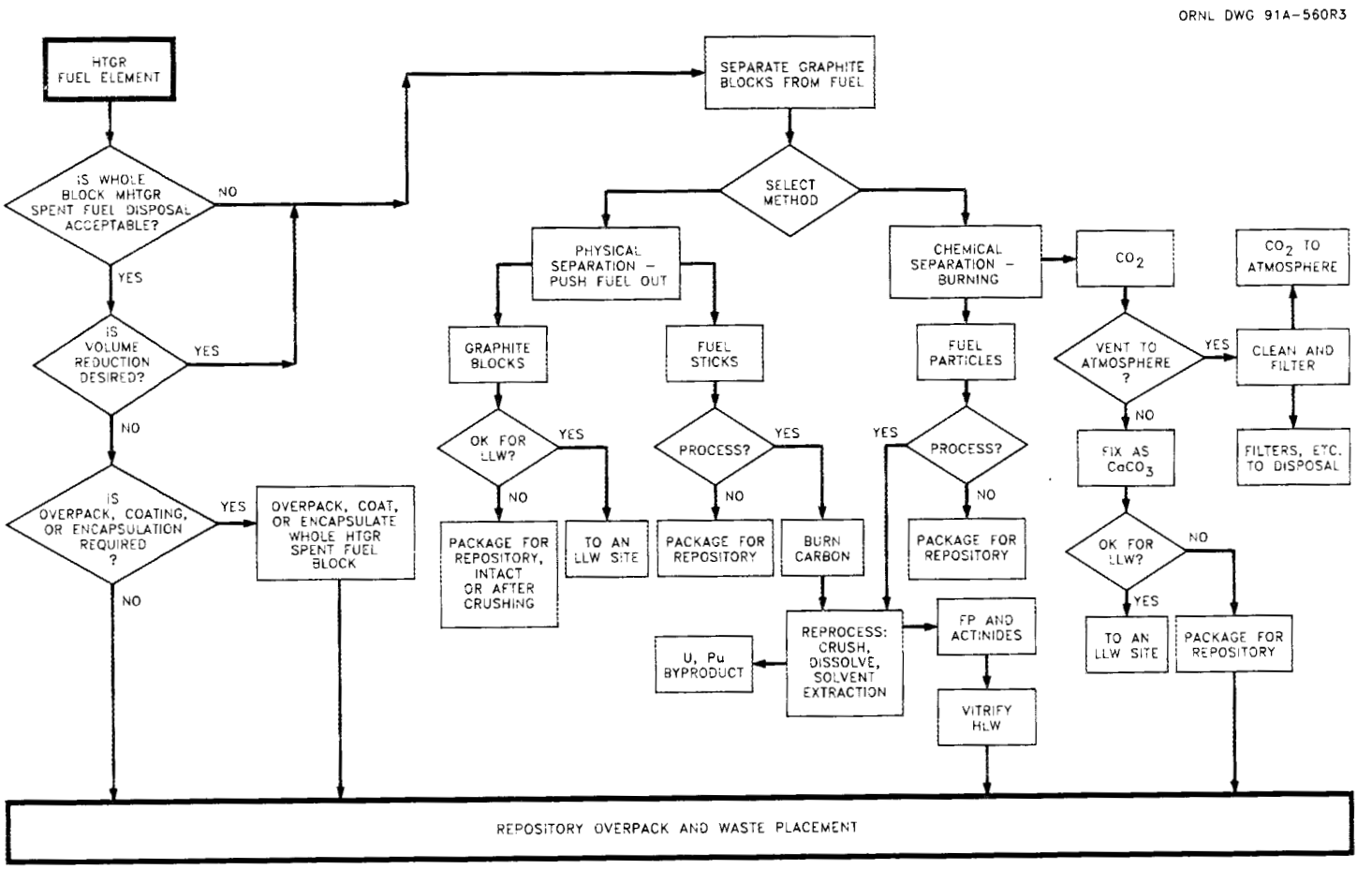

Fig. 4.1. Options for processing of HTGR spent fuel for repository disposal.

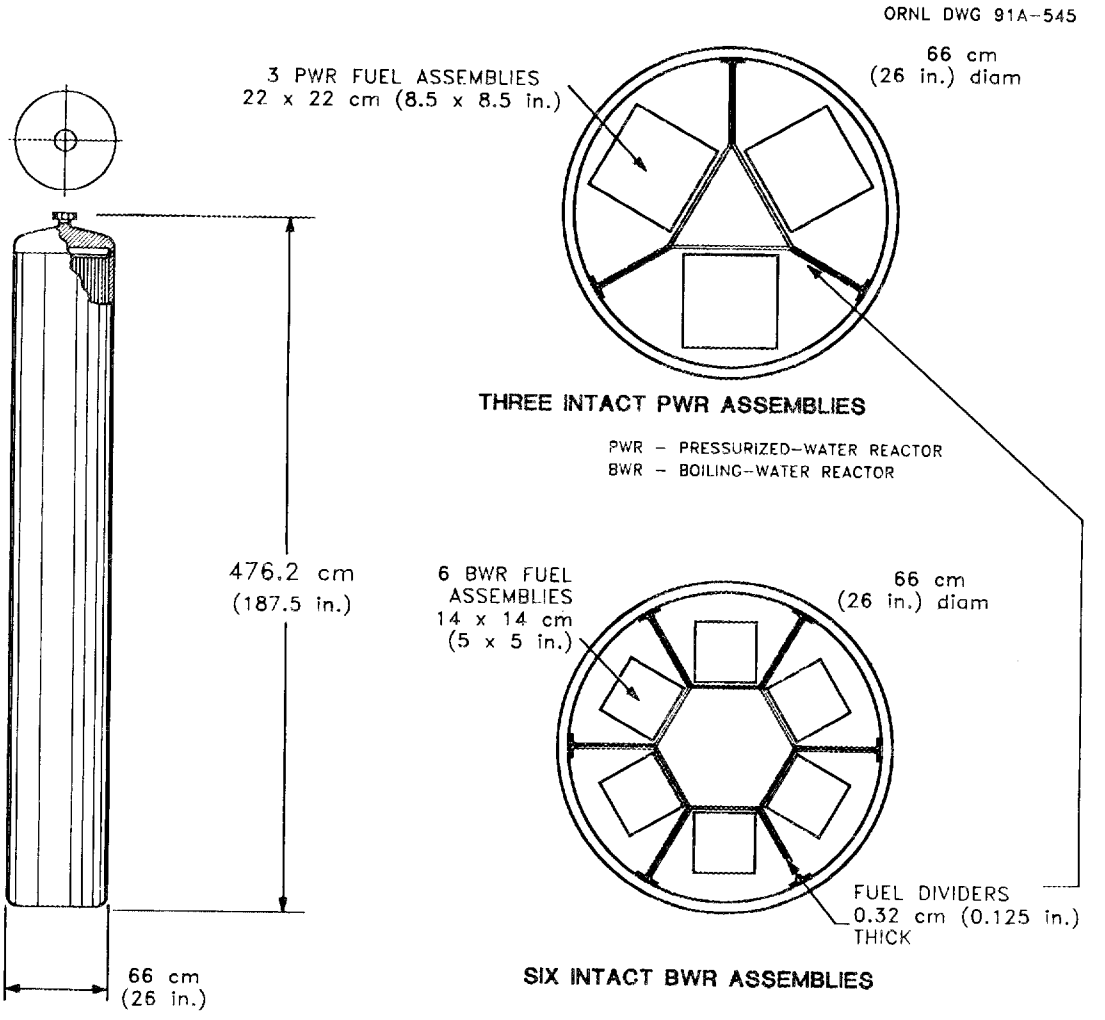

Fig. 4.2. United States Yucca Mountain project reference spent fuel container.

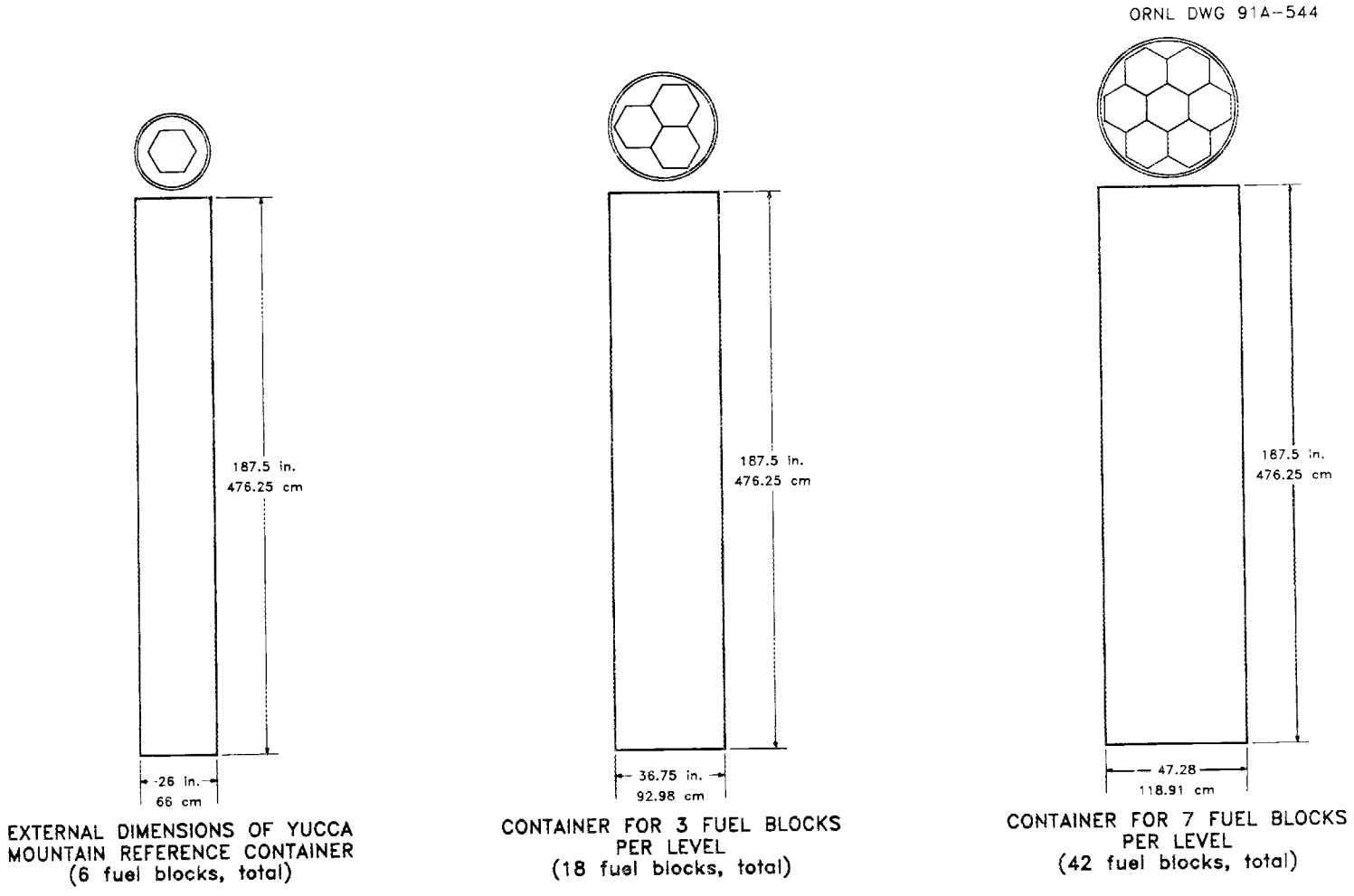

Fig. 4.3. Example HTGR spent fuel container.

4.2 DISPOSAL WITH PRIOR REMOVAL OF GRAPHITE

If whole block spent fuel is unacceptable for repository emplacement, the first processing option is to separate the spent fuel assembly into (1) the spent fuel matrix material and (2) the carbon from the graphite block. In the specific case of FSV HTGR spent fuel, 56% by volume of the intact assembly is graphite; the fuel rods occupy 24% of the overall volume, and the coolant holes take up the other 20%. The separation process can be a physical or mechanical process that yields graphite wastes or a chemical process such as burning where the graphite is oxidized to carbon dioxide. After separation, spent fuel processing and carbon processing must be considered separately.

For disposal of spent fuel, several options are available that depend upon whether the fuel is in the form of fuel rods obtained by mechanical separation or coated particles obtained by burning. The simplest option is to package the fuel rods for disposal at the repository. The other option for mechanically separated fuel is to burn and chemically process the fuel rods to final products consisting of fissile-fertile byproduct and a suitable waste form for the fission products and actinides. If separation has been by burning the fuel element, the coated particles can be further processed to final products as in the case of the fuel rods above, or the particles can be packaged for disposal at the repository. Various overpack, coating, or encapsulation technologies can be considered to produce an acceptable waste form.

For carbon processing, there are two different materials (CO_2 or graphite) to be disposed depending on whether burning or mechanical separation has been used. Depending on the fuel design and performance and upon the separation process efficiency, some fission products could be associated with the carbon waste stream. If the fission product contamination is low enough, the carbon waste can be treated as LLW. (It has been assumed that release of CO_2 to the environment is not an acceptable option although it is depicted on the option diagram.) If the carbon stream contains significant quantities of long-lived radionuclides, it may be required to go to the HLW repository.

If the carbon waste stream must go to the repository, it must meet certain minimum requirements. If the carbon is in the form of carbon dioxide, it can be reacted with calcium hydroxide or barium hydroxide to yield stable calcium carbonate (limestone) or barium carbonate. A carbonate waste form going to a repository would be significantly different from spent fuel; in particular, its heat generation rate would be very low. This would allow the carbon waste form to be emplaced in suitable disposal facilities without the need for significant dispersion of heat. In contrast, typical spent fuel with its much higher decay heat is disposed of in small canisters to allow conduction of decay heat to the rock while not overheating the waste. These options are discussed in more detail in Sect. 6.

4.3 DISPOSAL WITH DISSOLUTION OF SPENT FUEL

The last option is chemical processing of the spent fuel matrix. This includes the option of conventional reprocessing with recovery of uranium, plutonium, and/or thorium. If the waste from reprocessing is converted into glass, as has been proposed for HTGR reprocessing plants, the waste should meet all acceptance criteria. The repository is currently designed for glass waste forms from nuclear fuel reprocessing plants. Other waste forms must be evaluated on a case-by-case basis. This option is discussed in more detail in Sect. 7.

5. WHOLE BLOCK DISPOSAL

5.1 INTRODUCTION

This section addresses two questions. The first is whether whole block HTGR spent fuel disposal in a repository can be expected to be acceptable. There are four complementary approaches that can address this issue: (1) previous studies and experiments, (2) comparison of characteristics of HTGR spent fuel with regulations, (3) comparison of characteristics of HTGR spent fuel with other wastes that are accepted by a repository, and (4) options for improved performance. These issues are discussed in Sect. 5.2.

The second question addressed in this section is the engineering and cost impact of HTGR spent fuel block disposal on the repository compared to other types of spent fuel per MTHM and its implications for repository capacity. Although this paper does not attempt to deal with all aspects of this concern, several strategies for emplacing HTGR fuel assemblies into canisters are addressed; and the number of canisters required for disposal of fuel from existing HTGRs is calculated and put into context. This issue is discussed in Sect. 5.3.

5.2 ACCEPTABILITY OF WHOLE BLOCK DISPOSAL

A preliminary assessment of whole block disposal in a repository is provided. This initial assessment is based on idealized calculations. Detailed assessments for direct disposal of HTGR spent fuel must also consider issues such as failed fuel and tramp contamination of fuel element exterior with uranium. These types of considerations apply to all fuel types.

5.2.1 Previous Studies and Experiments

The authors are unaware of any studies in the U.S. on the acceptability of direct disposal of HTGR spent fuel in a repository. There have been detailed studies in Germany[1,2] of direct disposal of HTGR spent fuel in the planned German salt repository since the 1970s. These studies have concluded that this type of disposal is feasible, safe, and environmentally

acceptable. Laboratory and hot cell experiments show the waste form has excellent performance under 300 bar, 150°C salt brine conditions. In situ full-scale tests with spent HTGR fuel are to be initiated in late 1991 in the Asse Salt Mine. These tests, with real spent fuel and waste packages, are to demonstrate both spent fuel waste placement technology and repository performance. The spent fuel will be removed from the experimental salt mine upon completion of the experiment. The conditions in a salt repository are considerably different from those at the proposed repository at Yucca Mountain; thus, definitive conclusions about acceptability of HTGR spent fuel at Yucca Mountain cannot be made. The German data do, however, lend support to the feasibility of direct disposal at the proposed U.S. repository site. The planned German tests should demonstrate on a full scale one set of equipment for waste placement that could be used in any repository.

Assuming that ongoing German studies repository demonstration tests confirm initial studies, there may be the option to dispose of U.S. HTGR spent fuel in Germany if the quantities are limited and thereby avoid the expense of qualifying the U.S. repository for disposal of HTGR spent fuel. Several years ago, Sweden exchanged a number of HLW canisters with glass waste for a number of difficult-to-reprocess LWR spent fuel assemblies from Germany. The basis for exchange was as follows. Sweden is planning a repository for spent fuel, but had a small number of vitrified HLW canisters. Disposal of this HLW would require qualifying HLW glass for this repository. Germany was planning a repository to handle primarily HLW glass but had some difficult-to-reprocess spent fuel that would require special handling. By exchange of equivalent amounts of waste, both parties lowered their waste management costs and probably improved safety by allowing each country to concentrate and specialize on disposal of a specific waste form. A similarly mutually advantageous option might exist for the U.S. and Germany, whereby the U.S. would dispose of some of the German vitrified HLW and the Germans would dispose of U.S. HTGR fuel along with their own AVR fuel.

In the U.S., there has also been limited consideration of graphite as an advanced material of construction for waste packages in the repository.[3] The rationale for consideration of

graphite as a package material is based on its very low corrosion rate under repository conditions. This does not provide automatic acceptance of HTGR spent fuel as a waste form, but supports the perspective that graphite is highly inert and may prove to be an acceptable repository material.

5.2.2 Comparison of the Characteristics of HTGR Spent Fuel with Repository Acceptance Requirements

In the discussion that follows, the characteristics of HTGR spent fuel are evaluated against postulated acceptance criteria for a repository.

5.2.2.1 Allowable Release Rates for Radionuclides from the Repository

For HTGR spent fuel, there are two primary issues: (1) release of fission products/ actinides from the fuel microspheres, and (2) release of radioactive ^{14}C from the graphite block. The coated particles and the SiC coatings on the fuel particles must fail before fission products and actinides can escape the spent fuel, but any oxidation of the graphite block releases some ^{14}C as CO_2.

The expected corrosion process for a graphite fuel assembly in an air environment is slow oxidation of graphite. There have been numerous studies of graphite oxidation (Appendix C) including oxidation studies of nuclear grade graphite in air at elevated temperatures. These studies were conducted to evaluate storage of HTGR fuel elements and behavior of HTGR fuel elements under extreme reactor accident conditions. For a nominal graphite temperature of 150°C, the calculated oxidation rate based on experiments at higher temperatures is 1×10^{-17} g/cm^2·s (see Appendix C). Actual repository temperatures will vary with time. Initial temperatures may be higher, but U.S. regulations require the waste package to last 300 to 1000 years. By the time of package failure and air exposure to graphite, the temperatures will be significantly less and below 150°C at the surface of the graphite. With scoping, idealized calculations (Appendix C) of the oxidation rate of graphite, it is estimated to take 7×10^9 years to oxidize 1 cm of graphite.

The regulations on release rates of fission products and actinides are for a period of 10,000 years—a time period over which no significant oxidation of graphite is expected. If the graphite retains its integrity, there will be very little release of these radionuclides over the time period of interest due to oxidation. Even if the graphite should fail earlier, the SiC is even more resistant to oxidation, corrosion, or external physical damage. The HTGR spent fuel element would, by this analysis, meet repository EPA regulations on fission product and actinide release limits.

A second consideration is the release of $^{14}CO_2$ via oxidation of the graphite. The allowable EPA release limits for ^{14}C from the repository, if it is the only radionuclide of concern, is 100 Ci per 10,000 years for each 1,000 MTIHM. A single fuel element has an exposed surface area of 5.2×10^4 cm^2. With the above calculated oxidation rate of graphite, the carbon loss per fuel element is calculated to be 1.6×10^{-5} g/year.

Most of the ^{14}C is in the graphite. Typical expected levels are 10 Ci/MTIHM. Some of the ^{14}C is with the fuel and would not be released with graphite oxidation. A single block contains 90 kg of graphite with ~10 kg of fuel. Thus, the fractional release rate of ^{14}C compared to the EPA standard can be calculated. The expected fraction of the EPA allowable releases for ^{14}C, assuming the ^{14}C is uniformly distributed is 1.8×10^{-4}.

The NRC release limit of 10^{-5} fraction per year of the waste 1000-year inventory is also met by the HTGR fuel assembly under oxidation scenarios. With an expected block oxidation rate of 1.6×10^{-5} g/year and 90,000 g of graphite per block, the fractional release rate is 1.8×10^{-9} per year for the ^{14}C. The release rates of other radionuclides (fission products and actinides inside the SiC-coated particles) are much lower.

The above analysis indicates that in the environment expected at the Yucca Mountain repository, the HTGR intact spent fuel has outstanding characteristics as a waste form. The real limits of performance will not be oxidation, but one of the following:

- Cracked HTGR fuel elements. Limited examination of HTGR spent fuel does not show serious degradation,[4] but some damaged fuel elements must be expected if there is a large deployment of reactors fueled with such a fuel. Localized cracks have been observed in at least two elements.[5]

- Potential water leaching of the spent fuel in the repository. There is the possibility for some percolation or dropwise flow of water through the repository. Measurements of corrosion rates of graphite under conditions that might be expected at Yucca Mountain have not been identified, but graphite is known to resist attack by conventional aqueous reagents. In the chemical industry, graphite heat exchangers are used for very highly corrosive conditions when most metals fail. Graphite is generally considered "completely inert to all but the most severe oxidizing conditions."[6] SiC is also highly resistant to both oxidation and aqueous corrosion.

- Degradation mechanisms that are unidentified as of yet.

- Under extreme accident scenarios (e.g., earthquakes or volcanic activity) the graphite blocks could fracture and oxidize, but the coated particles would still survive.

Given the calculated performance of HTGR spent fuel as outlined above, there is no known degradation mechanism that will prevent HTGR fuel elements from meeting repository performance requirements. If there is a problem with performance, it will come from an unidentified mechanism.

5.2.2.2 Allowable Organics in a Repository

Disposal sites will generally limit the presence of organics in a repository. The basis for such restrictions is that some organics (complexing agents) can solubilize fission products and actinides with subsequent transport of such materials by water to the open environment. These complexing agents are usually complex compounds containing carbon, hydrogen, oxygen, and, not infrequently, nitrogen or sulfur.

HTGR spent fuel elements do not contain organic compounds. The fabrication procedure (and reactor operating conditions) will have graphitized (or driven off) all organics that might have been present.

5.2.2.3 Combustibility

The NRC limits combustible radioactive wastes (10 CFR 61.135:C:3) in a repository. Specifically, "all combustible radioactive wastes shall be reduced to a noncombustible form unless it can be demonstrated that a fire involving the waste packages containing combustibles will not compromise the integrity of other waste packages, adversely affect any structures, systems, or components important to safety, or compromise the ability of the underground facility to contribute to waste isolation."

Block graphite is highly inert and generally will not burn without a sustained outside heat source to maintain burning conditions. Some very limited information is available on nuclear grade graphite based on early research on HTGR reprocessing where the first process step was to burn off the graphite.[7] Block graphite, based on experiment, normally does not burn for three reasons.

- It has a very low surface-to-volume ratio that limits burning. The rate at which oxygen can reach the surface is very slow.

- It is highly inert. Most organics (including coal) burn by decomposition of the fuel as it is heated, which releases combustible gases and breaks up the surface. Graphite does not contain hydrogen or water, thus, no mechanism exists for breakup of the surface and release of combustible gases. The higher the carbon content of the fuel and the density, the lower the combustibility.

- It is highly conductive, which reduces the probability of "hot spot" formation that can lead to or support combustion.

Block graphite will burn if an external heat source is provided. The combustion of graphite at Chernobyl occurred because reactor decay heat from fission products (which melted metals and decomposed concrete) kept the graphite at very high temperatures. The temperature levels in a reactor accident are much higher than even the extreme values envisioned in worst-case repository accident scenarios.

5.2.3 Comparison of HTGR and LWR Spent Fuel Under Repository Conditions

Work to date indicates that direct disposal of LWR spent fuel in the proposed repository will be acceptable although the final package and/or overpack has not yet been designed. If HTGR spent fuel can be shown to be superior to LWR spent fuel in a repository, it follows that direct disposal of HTGR spent fuel will be acceptable. The chemical and physical designs of LWR and HTGR fuels are very different; thus, their repository performance differs significantly. The chemical and physical differences can be considered separately.

5.2.3.1 Physical Effects

The HTGR fuel block with microsphere fuel geometry minimizes the consequences of many types of failure compared to LWR spent fuel. A single LWR pin in a fuel assembly contains a significant quantity of fuel (2 to 4 kg). Thus, a random clad failure exposes a significant amount of fuel to the repository environments. A single HTGR microsphere in a fuel block contains only a very small quantity of fuel (1 to 5 mg). Thus, a random coating failure does not expose a significant amount of fuel to the environment. This difference in geometry may give the HTGR fuel element some advantages over the LWR for certain failure modes. For example, the geometry effect is particularly important in the release of potentially gaseous fission products (^{129}I, ^{14}C as CO_2, ^{85}Kr, and ^{3}H) where pinhole clad failure depressurizes the pin or microsphere with immediate release of these radionuclides.

5.2.3.2 Chemical Effects

This discussion assumes mildly oxidizing and potentially wet repository conditions such as expected at the proposed U.S. repository at Yucca Mountain in Nevada. Under oxidizing conditions, all the major components of both HTGR and LWR spent fuel are thermodynamically unstable. Given sufficient time, zirconium (zircaloy is 99% Zr) would convert to zirconium oxide, graphite to carbon dioxide, uranium dioxide to uranium trioxide (UO_3), and uranium carbide to the oxide. The rates of these conversions depend on the kinetics of the reactions.

Oxidation of UO_2 (LWR spent fuel) or uranium oxycarbides (HTGR spent fuel) in a repository is undesirable for two reasons.[8,9] First, oxidation beyond U_3O_7 to U_3O_8 or higher causes physical breakdown of dense, crystalline uranium fuel forms. This is because the molar volumes of the higher oxides are significantly larger. Physical disruption of components increases the exposed surface area, and enhances release of fission products and actinides.

The other negative aspect of oxidation is that UO_3 (hexavalent U) is much more soluble than uranium fuel forms.[10] (This is why fuel reprocessing plants use nitric acid, which is oxidizing, in order to dissolve UO_2.) The typical uranium fuel forms are highly insoluble[10] in water. Fission products and actinides cannot be released from the fuel until degradation of the uranium fuel structure. Fully oxidized uranium (+6 valence state such as in UO_3) is the most soluble form of uranium. If water is present, the uranium dissolves and is leached away from the fuel exposing the other actinides and fission products to repository air and groundwater.

The above considerations indicate that the best waste form will be the waste form where the "cladding" protecting the fuel has the slowest kinetics of oxidation. The lower the oxidation rate of the "cladding," the longer will be the period preceding exposure of the uranium fuel to the oxidizing (or wet) environment.

The relative stability of HTGR and LWR spent fuel can be compared using idealized, scoping calculations to determine the time to oxidize the graphite or zircaloy and expose the fuel to the repository environment.

For graphite, the oxidation rate is extremely slow. In Sect. 5.2.1, it was calculated to take 3.6×10^9 years to oxidize 0.5 cm of graphite to expose HTGR fuel rods. More is given on this topic in Appendix C. For zircaloy, the rate of oxidation has been measured and expressed as:[11]

$$\Delta M = 3.25\ t \times 10^4 \exp\ [-22{,}200/RT]$$

$$\Delta M = mills$$

$$T = {}^\circ K\ (150^\circ C = 423^\circ K)$$

$$R = gas\ constant\ (1.987)$$

$$t = days.$$

For a typical LWR clad thickness of 25 mm, the time for uniform oxidation through the clad is 5×10^5 years. Like HTGR spent fuel, uniform oxidation is unlikely to be the limiting factor in LWR waste form performance.

Even so, these simplified calculations indicate that HTGR fuel elements are orders of magnitude more inert than LWR fuel elements under oxidizing repository conditions and should exhibit superior performance as a waste form. Note also that no credit was taken for the SiC coatings on the HTGR fuel form; the coatings themselves are designed to isolate the fuel.

As indicated above, once the protective layer of graphite is breached, HTGR fuel is still protected by the SiC coating. For LWR fuel, however, once the zircaloy cladding is breached, the UO_2 fuel is exposed to oxidation. This occurs at a measurable rate of temperatures as low as 150°C (see Appendix B).

5.2.3.3 Combined Physical Form and Chemical Effects

Under certain circumstances physical form and chemical effects can combine to cause special problems. One such example is the potential release of ^{14}C from LWR spent fuel at the proposed Yucca Mountain repository.[12] In an LWR fuel assembly, the ^{14}C is on the surface of the clad, in the fuel and in the form of gaseous CO_2 in pressurized fuel pins. A failure of the waste package can allow air in to oxidize carbon on the fuel clad to CO_2. Any failure of the cladding also results in release of the gaseous CO_2 containing the ^{14}C. There is concern about exceeding the 10^{-5} fraction/year allowable ^{14}C releases at the Yucca Mountain site with LWR fuel.[12] While LWR fuel contains less ^{14}C than HTGR spent fuel, ^{14}C releases are predicted to be higher for LWR fuel than for HTGR fuel because of the chemical and physical differences between the two fuel types.

5.2.4 Options for Improved Whole Block Disposal

The preceding analysis considered whole block disposal of HTGR spent fuel as discharged from the reactor. The preliminary analysis indicates excellent performance as a waste form. There are two conditions under which better performance may be desired:

- There may be other mechanisms for failure that have not yet been identified.

- There may be badly failed fuel.

Better waste performance is possible by two techniques—better waste packages and improved whole block HTGR waste forms. Better packaging is an option for all waste forms and will not be further discussed herein. The performance of the fuel element itself as a waste form might be improved by the following techniques.

- Block coolant channels with graphite plugs. Air or water reactions with graphite are surface phenomena. Most of the surface area of a fuel block is in the coolant channels.

If the coolant channels are plugged, the surface area (and area for chemical reactions) is reduced by 77%.

- Coat the graphite block with a protective surface coating. There has been limited research in the reactor community to improve chemical resistance of HTGR fuel blocks under severe accident conditions—typically air at temperature of ~1600°C. Coating options include ceramics such as SiC. Such coatings may also reduce long-term oxidation rates.

5.3 REPOSITORY ENGINEERING AND COST CONSIDERATIONS

5.3.1 Repository Engineering Limits

The first issue with proposed disposal of any type of waste in a repository is whether it can be disposed of in its current form. If the answer is yes, the next issue is cost. Repository cost estimation a highly complex issue; but some estimates of relative HTGR spent fuel disposal costs compared to LWR spent fuel disposal costs can be made based on the characteristics of the two waste forms. To make such comparisons, some understanding of the engineering limits of repositories is required.

The cost of a repository depends on three waste characteristics: (1) heat generation rate, (2) volume, and (3) chemical/physical properties.

- Repository design and cost is controlled by radioactive decay heat. If waste decay heat levels are excessive, the corresponding high temperatures may damage the waste form/package, cause stress in the rock with the potential for tunnel or cooling wall collapse, or damage the rock. In each case, repository performance is degraded. To avoid high repository temperatures, waste canisters are separated from each other in the repository with the separation distance increased for waste packages with higher decay heat levels. The proposed repository design for the proposed Yucca Mountain repository separates LWR spent fuel waste canisters by 4.57 m in each tunnel with

tunnels spaced 38.4 m apart.[13] For the proposed Yucca Mountain repository, over 160 km of tunnels are required to spread the heat level underground and avoid local overheating. This repository design requirement drives the costs.

- A second design constraint and cost driver is waste volume. Larger waste volumes require more waste packages or larger waste packages. Larger waste packages are more economical, but there are two possible constraints:

  1. Heat load per waste package must be limited to avoid overheating the waste.

  2. Large packages may be more difficult to handle underground. In the specific case of the proposed Yucca Mountain repository, this is a relatively minor constraint because truck access to the repository is planned. With hoist (shaft) access, there are usually significant weight/size limitations. The major sensitivity of waste volume as a cost driver derives from experience with vitrified HLW, however, it seems implausible that the cost leverage for large volumes of spent fuel will be comparable to the costs associated with glass or other encapsulated waste forms.

- A third constraint and cost driver is waste characteristics. If wastes are chemically unstable or have other unusual characteristics, special waste packages may be required.

5.3.2 Heat Limits

The heat generation rate per unit volume of HTGR spent fuel is 5 to 10% of that of LWR spent fuel. This implies that 10 to 20 times as much spent fuel by volume can be emplaced per kilometer of disposal tunnel in a repository compared to LWR spent fuel. This can be done by use of larger waste packages or closer spacing of waste packages or some combination.

5.3.3 Volume Limits

A potential disadvantage of the whole block disposal form for HTGR fuel is the large volume of the fuel element relative to the fuel content in an LWR assembly. A typical waste canister for the Yucca Mountain repository is sized to contain a mix of PWR and BWR assemblies equivalent to a spent fuel quantity of about 1 MTIHM. By comparison, a previous study assumed that an equivalent waste canister would contain a vertical stack of four FSV fuel blocks, or approximately 40 kg of heavy metal.[14] This factor of 25 difference between the HTGR whole block disposal and LWR fuel disposal is a source of concern. If only the current HTGR spent fuel must be disposed of, it is likely that a modified version of the proposed existing waste canister would be used so that HTGR spent fuel could be handled with the same emplacement equipment planned for LWR spent fuel or HLW. If large quantities of HTGR spent fuel are generated in the future, part of the repository and the waste package would be optimized for HTGR spent fuel (see below). If the quantities of HTGR spent fuel were larger than current inventories, but insufficient to reoptimize the repository system, the intermediate option of reoptimizing the waste package exists. The options include:

1. Taller canisters. Two sizes of canisters are typically assumed for the repository: (1) 26 in. by 12 ft, and (2) 26 in. by 15 ft. If use of the taller canister is assumed, then FSV fuel elements can be stacked six high, increasing canister capacity to about 60-kg heavy metal (HM).

2. Larger diameter canisters. Canister diameter is limited mainly by thermal considerations, given the thermal heat projected for LWR fuels. Within this limit, waste package size is optimized based on handling, criticality, economic and other considerations given the expected range of waste to be disposed. The lower thermal power density of HTGR fuels should enable the use of larger waste canisters. If there were large quantities of HTGR spent fuel, the waste package would be optimized for HTGR spent fuel.

Illustrative sketches of strategies for emplacing HTGR blocks in larger diameter canisters are shown in Fig. 4.3. A canister 37 in. by 15 ft would be capable of containing six layers of three FSV blocks each, approximately 180 kg HM. A larger canister 47.3 in. by 15 ft (Fig. 4.3) would contain 42 FSV blocks, or about 420 kg HM.

The thermal output of a 5-year old FSV fuel packaged 18 blocks per canister would be about 450 W. This is far less than that for LWR fuel, for which the upper limit is about ten times higher. It is in the same range as vitrified defense program HLW, estimated at 300 to 800 W per canister.

3. Closely spaced boreholes. The distance between boreholes in the repository design is set by thermal considerations for high heat wastes and structural considerations for low heat waste (collapse of wall between boreholes). Given the lower thermal density of HTGR fuel, it should, in principle, be possible to decrease the distance between boreholes containing HTGR fuel, thus increasing repository capacity. This option needs further study in order to assess its feasibility and advantages.

Given the quantities of currently existing HTGR spent fuel, as discussed in Sects. 3.2.2 and 3.2.4, systems will require as many as 700 canisters (if FSV fuel is emplaced at 4 to a canister), or as few as 200 canisters or less (if larger canisters are used). For comparison, it is projected that there may be 15,000 canisters of vitrified HLW and 45,000 canisters of LWR spent fuel. Thus, the whole block disposal of HTGR fuel is not expected to have a major impact on repository capacity unless a large-scale deployment of HTGR technology is undertaken.

5.3.4 Waste Form

Earlier scoping calculations (Sect. 5.4) suggest HTGR spent fuel is a superior waste form to LWR spent fuel. This should simplify licensing and may reduce cost per unit volume for the waste package.

5.3.5 Relative HTGR and LWR Spent Fuel Disposal Costs

If there are only small quantities of HTGR spent fuel to dispose of, the proposed standard waste canisters would be used. It would be uneconomical to develop custom waste packages and custom waste handling equipment for small quantities of waste.

If there is large-scale deployment of HTGR technology, part of any proposed repository would be optimized for disposal of HTGR spent fuel. Repository design involves complex tradeoffs. Consequently, it is unclear whether an optimized design for HTGR whole block spent fuel disposal would be more or less expensive then LWR spent fuel disposal per unit of electricity generated. The reasons for this conclusion are as follows.

- Repository cost is primarily controlled by decay heat load. An LWR has a power plant efficiency of 32 to 35% vs 38 to 40% for a HTGR. The 20% greater power plant efficiency of the HTGR implies ~20% less decay heat in spent fuel per unit of electricity generated. Twenty percent less decay heat per unit of electricity generated implies 20% fewer tunnels required in the repository per unit of electricity generated to spread out the heat level underground.

- The geometry of the HTGR spent fuel assembly allows a more optimized waste package/repository design than for LWR spent fuel with significant cost savings per unit volume. This is self evident when comparing the optimized repository designs for disposal of LWR spent fuel in the U.S. vs disposal of Canadian heavy-water reactor (CANDU) spent fuel in Canada. LWR spent fuel is 4- to 5-m long. CANDU spent fuel is ~0.5 m long. The HTGR spent fuel is ~1-m long, thus, an optimized repository design for HTGR spent fuel would more closely resemble Canadian designs. These differ from U.S. designs in three respects:

  1. The lowest cost waste package minimizes surface to volume ratio by use of a package where the ratio of package height to diameter is 1 to 1. For the U.S. waste package, the ratio is ~7.2. For the Canadian waste package, the ratio is 3.5 (four CANDU

spent fuel bundles high). An optimum HTGR package would probably be close to the Canadian design.

2. The height of disposal tunnels is determined by length of the disposal package. The underground waste transporter to emplace fuel vertically orientates the waste package and lowers it into a borehole in the floor of the tunnel. The long U.S. waste package (to handle LWR spent fuel) has resulted in a proposed U.S repository tunnel height of 6.7 m vs 4 m for the Canadian design. This implies 50% more rock removal per kilometer of tunnel due to long package length. Fuel element geometry strongly impacts repository tunnel cross section and cost.

3. The large volume of HTGR spent fuel per unit of electricity implies more and larger packages.

5.4 REFERENCES

1. H. Brucher, et al., "Disposal of Spent HTGR Fuel Elements," *Proceedings of the Second Annual International Conference on High Level Radioactive Waste Management*, Las Vegas, Nevada, 1991.

2. N. Kirch, H. U. Brinkmann, and P. H. Brücher, "Storage and Final Disposal of Spent HTR Fuel in the Federal Republic of Germany," *Nucl. Eng. and Design*, **121**:241 (1990).

3. W. Clark, Lawrence Livermore National Laboratory, Livermore, California, personal communication to C. W. Forsberg, Oak Ridge National Laboratory, Oak Ridge, Tennessee, September 16, 1991.

4. F. McCord and J. J. Saurwen, *Remote Examination of Fort St. Vrain HTGR Fuel and Reflector Elements*, GA-A-17469 (March 1984).

5. J. J. Saurwein, *Nondestructive Examination of 54 Fuel and Reflector Elements from Fort St. Vrain Core Segment 2*, GA-A16829 (October 1982).

6. Perry, J. H., et al., *Chemical Engineers Handbook: Fourth Edition*, McGraw Hill (1963).

7. D. T. Young, *Fluidized Combustion for Beds of Large, Dense Particles in Reprocessing HTGR Fuel*, GA-A14327 (March 1977).

8. M. J. Apted, et al., *Preliminary Calculations of Release Rates from Spent Fuel in a Tuff Repository*, UCRL-JC-104832 (1991).

9. R. B. Stout, et al., "LWR Spent Fuel Waste Form Characteristics: "Grain and Fragment Size Statistical Dependence for Oxidization Response," *Proceedings of the Second Annual International Conference on High Level Radioactive Waste Management*, Las Vegas, Nevada, 1991.

10. K. S. Deffeyes and I. D. MacGregor, "World Uranium Resources," *Scientific American* (January 1980).

11. R. E. Einziger, Effects of an Oxidizing Atmosphere in a Spent Fuel Packaging Facility," *Proceedings of Focus 1991*, Las Vegas, Nevada, September 29-October 3, 1991.

12. C. Pescatore and T. M. Sullivan, "Potential CO_2 Releases from [LWR] Spent Fuel Containers at Yucca Mountain," *Proceedings of the Second Annual International Conference on High Level Radioactive Waste Management*, Las Vegas, Nevada, 1991.

13. C. W. Forsberg, *Representative Geological Repository Designs for Spent Fuel and High-Level Waste*, K/ITP-393 Martin Marietta Energy Systems, Inc., K-25 Site, January 1991.

14. R. Salmon, and K. J. Notz, *Non-LWR and Special LWR Spent Fuels: Characteristics and Criticality Aspects of Packaging and Disposal*, ORNL/TM-11016, Martin Marietta Energy Systems, Inc., Oak Ridge National Laboratory, January 1990.

6. DISPOSAL WITH REMOVAL OF GRAPHITE

6.1 OPTIONS AVAILABLE

As previously discussed, optimization of the economics of disposal of HTGR spent fuel elements may dictate that the spent fuel be separated from the graphite. Particularly, this would be of great advantage if the fuel and bulk graphite could be cleanly separated, allowing the graphite to be disposed as a LLW and allowing the spent fuel to be emplaced in less volume in the repository. There are two general options available for separation: physical or mechanical separation of the fuel from the graphite block and burning of the fuel element, either as a whole fuel element or after having been crushed.

6.2 PHYSICAL SEPARATION OF GRAPHITE

Recovery of essentially intact fuel rods or sticks (e.g., by pushing or vibrating them out of the graphite block) would be the favored method for physical separation. There has only been limited experience with this method, primarily the recovery of fuel rods from test irradiations and from examination of at least one fuel element. This method should result in very sharp separation of the spent fuel and the graphite block material, and, if the particle coatings have performed to their potential, there should be very little fission product contamination of the graphite. Disposal of the graphite block as LLW will depend upon high performance of the particle coatings and the fuel rod matrices. But, of course, both of these are primary objectives of the fuel element design because of the need to maintain a clean helium-cooled primary system in the reactor.

Other methods such as core drilling or mechanical machining (milling) would appear feasible, but these have the disadvantage of almost certainly damaging some fuel particle coatings thus degrading the spent fuel and undoubtedly increasing radioactivity of the graphite block. Machining and crushing might also be used to obtain an all granular fuel product. Limited crushing followed by size screening or density separation are possibilities for performing

separation. However, any method that subjects the particles to significant mechanical stresses is not desirable for the reason stated above.

Regardless of the recovery method, intact fuel rods will likely contain substantial amounts of associated carbon matrixed with the fuel particles. Under the best conditions, physical separation of graphite will leave a concentrated high activity fuel stream of lower volume and a low activity graphite stream of about the same volume as the original fuel element. (Fuel rods represent only a small fraction of the fuel block.) The combined volume of the two streams (the graphite stream now at a lower bulk density than before) will be greater than the original fuel element volume. Under less than ideal conditions and depending to some degree upon the ultimate storage/disposal criteria, physical separation by itself could result in larger total volumes to handle and activity of the graphite stream compromised. The separation should be considered only if the graphite block can be disposed as an LLW.

6.3 CHEMICAL SEPARATION OF GRAPHITE (BURNING)

In this method, graphite is simply burned away from the fuel particles while carbon dioxide is formed as a product of the combustion. Release of the CO_2 to the atmosphere, even after removal of the noble gases and other fission products, is prohibited on any large scale due to the ^{14}C content. The potential for life cycle and carbon dating impacts are principal concerns. Thus, disposal of graphite by burning will likely require fixation of the carbon dioxide (e.g., as calcium carbonate) and will only partially mitigate storage/disposal requirements for the graphite (carbonate) stream.

Burning produces a large quantity of carbon dioxide that must be processed because of ^{14}C that is present in the graphite. However, carbon dioxide is an acid gas that is easily removed by scrubbing with lime water. A carbonate precipitate is formed that can be separated and dried for storage. Previous work that assumed shallow land burial of $CaCO_3$ (or $CaCO_3$ fixed in concrete) concluded that separating the bulk of the graphite fuel block from the fuel particles was unattractive on both technical and economical grounds.[1] The total waste

volume is several times the original whole block volume. If fuel rods are removed and burned, the resulting waste volume is about half the initial whole block volume.

6.4 POSSIBLE IMPROVEMENTS TO FUTURE HTGR FUEL

The properties of fuel have been discussed from the standpoint of the status of development for the two principal HTGRs in the U.S. The FSV reactor fuel was designed with the assumption that the fuel would be recycled; thus, there was not a large incentive to develop means of separating fuel and graphite physically. Certainly, there are possible improvements to future HTGR fuels that would make the disposal of HTGR fuel in a repository more economical or could improve the performance of the fuel in a repository. Thus, future HTGRs are not necessarily restricted to the range of properties of existing fuels.

HTGR fuel, if stored as a whole fuel element, does have the disadvantage of requiring considerably more volume for storage of a unit weight of fuel and fission product isotopes. Thus, improvements in the fuel design and performance to enhance the feasibility of separation of graphite from the spent fuel should be considered. The question is, Can the graphite be kept sufficiently clean to allow disposal of the separated graphite as an LLW? Improvements in the performance of coatings will enhance the feasibility of disposing of graphite as an LLW. Use of parting materials, such as graphite powder, between fuel rods and the walls of the fuel holes could be used to enhance the mechanical separation of fuel rods from the bulk fuel blocks and might even improve thermal performance of the fuel element in the reactor.

Failure of particle coatings does increase the likelihood of migration of fission products to the graphite block, although the graphite in the fuel structure (fuel rod) also acts as a barrier. It was previously noted that FSV fuel has a coating failure rate of 0.3 to 0.5%. Later fuel should be considerably improved. Improvements in performance can be reasonably expected as process control improves and more advanced coating materials are used.

Separation of fuel rods from graphite has been done by GAC.[2] As a part of the examination of FSV fuel element 1-0743, it was necessary to separate the fuel rods from the graphite block. Using a tool especially designed for the task, GAC cored out the fuel hole plugs at the top of the element and the graphite containment at the bottom of the element. The fuel rods were removed from the element by breaking out the cored sections and pushing the fuel rod stacks into a receiving trough. The fuel stacks were pushed out with either a metal rod or a special device designed to measure the push-out force. The push out forces were generally low; but, in a few cases the forces were higher (up to 10 kg), which was believed to be caused by misalignment of the fuel hole and the receiving trough. It was concluded that there was no appreciable interaction between the fuel block and the fuel rods in fuel element 1-0743.

6.5 STATUS OF TECHNOLOGY

Separation of the fuel particles from the graphite matrix was anticipated in the design of the HTGR fuel element and several methods have been investigated. Unirradiated whole blocks have been successfully burned to disengage the fuel particles.[3] Block breaking, crushing, and subsequent burning using a fluidized bed has also been performed in cold prototype equipment.[4] Small scale burning of irradiated HTGR fuel has been done.[5] Complete development of such techniques would require additional hot experimental testing with subsequent large scale demonstration of integrated operations. However, integrated demonstration facilities do not currently exist and no "licensable" facilities are presently planned.

In summary, removal of graphite by burning does not appear to be a better option of the two methods presented in view of the great increase in volume upon solidification of the CO_2 into carbonate. Physical removal of graphite from fuel rods will not likely be a sharp separation with existing fuel elements, but it is an available technology. There are undoubtedly means of improving separation through changes in the fuel element design.

If physical separation is to be further explored, it will be important to develop fuel designs especially tailored for separation and to concentrate on very low particle failure rates, both of which would appear to be realistic objectives. It will be necessary to prove that fission product contamination is sufficiently low to enable disposal of the graphite blocks as LLW. In addition, further work should be considered for other noninvasive means of separating graphite and fuel, such as electrolytic methods, which have been used to separate intact coated particles from fuel rod matrices in post-irradiation examination of fuel.

For disposal, the fuel rods can be simply loaded into the canister, but the rods may require some containment in a matrix. Separated fuel particles with residual graphite can be embedded in grout to provide complete fireproofing should that be required for repository storage. It is noted that the SiC coatings alone ensure good fire protection of the fuel compounds in the particles.

6.6 REFERENCES

1. C. L. Fitzgerald et al., *Head-End Processing Development, Annual Progress Report of Gas-Cooled and Thorium Utilization Programs for Period Ending September 30, 1971*, ORNL-4760, Union Carbide Corporation, Oak Ridge National Laboratory, January 1973.

2. J. J. Saurwein, C. M. Miller, and C. A. Young, *Postirradiation Examination and Evaluation of Fort St. Vrain Fuel Element 1-0743*, GA-A16258, May 1981.

3. H. Barnert-Weimer and R. S. Lowrie, *Whole-Block Burner Studies, Annual Progress Report for Gas-Cooled Reactor Programs for Period Ending December 31, 1972*, ORNL-4911, Union Carbide Corporation, Oak Ridge National Laboratory, March 1974.

4. D. T. Young, *Fluidized Combustion for Beds of Large, Dense Particles in Reprocessing HTGR Fuel*, GA-A14327, March 1977.

5. C. L. Fitzgerald and V. C. A. Vaughen, *Burner Off-Gas Studies with RTE-2-3, Thorium Utilization Program Progress Report for January 1, 1974-June 30, 1975*, ORNL-5128, Union Carbide Corporation, Oak Ridge National Laboratory, May 1976.

7. DISPOSAL WITH DISSOLUTION OF FUEL

In this disposal option, fuel reprocessing is carried out to recover the remaining fissile and fertile values in the spent fuel. The minor actinides (such as Pa, Np, Am, and Cm) are also recovered and managed separately from the high-level fission product waste. It was assumed that transuranic and other actinide wastes would be incorporated into borosilicate glass.

The technology discussed here is based on a flow sheet developed with the constraints that existed approximately two decades ago. Accordingly, it is based on burning technology. Today, a flow sheet that starts with mechanical separation and other methods for obtaining the particles as discussed in the previous section might be more appropriate. Nevertheless, for simplification, the old flow sheet used as reference for so many years for fuel recycle development is adequate to scope the dissolution and processing option.

7.1 OVERALL FLOW SHEET

The chemical processing flow sheet (Fig. 7.1) that might be used for the dissolution option is based on burning technology and consists of the following sequence of operations:

1. Crushing the graphite blocks and burning away the graphite to free the silicon carbide coated particles.[1]

2. If desired, coated fertile thorium particles when present (e.g., FSV) may be separated from the fissile particles by screening and processing separately as indicated by the solid lines for the fissile material and dashed lines for the thorium-bearing particles. Alternatively, the materials from the two particles may be processed together.

3. The particles are then crushed and burned to remove the pyrolytic carbon from the inner coatings and the carbon present as metallic carbides.

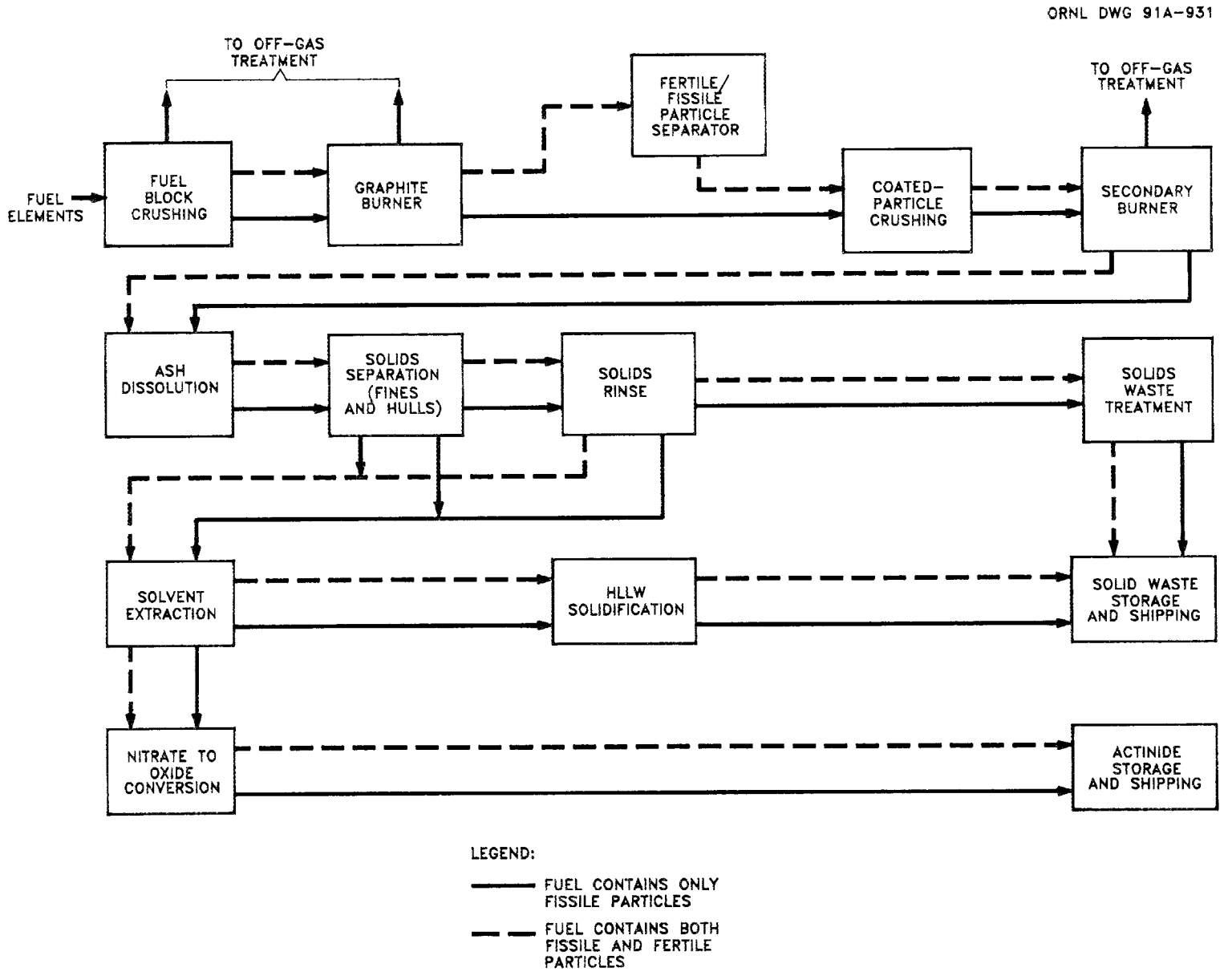

Fig. 7.1. HTGR reprocessing flow sheet.

4. The resultant ash plus the gasborne semivolatile particles of fission products (Cs, Ru, etc.) are combined and dissolved in nitric acid. The hull rinse liquid is combined with the dissolver solution, and subsequently adjusted to the proper acidity and heavy metal concentrations for solvent extraction.

5. In solvent extraction (Fig. 7.2), tributyl phosphate (TBP) is employed in a Purex flow sheet to recover U, Np, Pu from fissile material feeds and in a Thorex flow sheet to recover Th and U. After removal of bulk actinides by Purex or Thorex processing, the minor actinides (Am and Cm) are recovered using the TRUEX process[2] that employs octyl(phenyl)-N, N-diisobutyl carbamolymethylphosphine oxide, typically called CMPO, as the extractant. The TRUEX process employs a mixed diluent of TBP and normal paraffin hydrocarbon (NPH).

6. The product solutions of actinide nitrates are converted to oxides for storage and shipping. It is to be noted the minor actinide oxides (Am and Cm) also contain the rare earth fission product oxides.

7. The high-level liquid waste (HLLW) from solvent extraction is solidified to borosilicate glass.

8. Off-gases from burning operations and ash dissolution are routed to a treatment system, where the ^{14}C and ^{129}I are trapped and stored. The shorter lived fission gases ^{85}Kr ($t_{1/2}$ = 10.73 years) and ^{3}H ($t_{1/2}$ = 12.26 years) can also be trapped and stored if desired.

7.2 HEAD-END OPERATIONS

These operations involve crushing the graphite matrix and burning the graphite in oxygen at 700-750°C, collecting the silicon carbide coated particles and crushing the SiC-coated particles to make the inner kernel accessible for its conversion to solvent extraction feed. When fertile and fissile particles are both present, the particles may be separated if that is desirable for recycle, but for terminal storage of all products, separation would not be

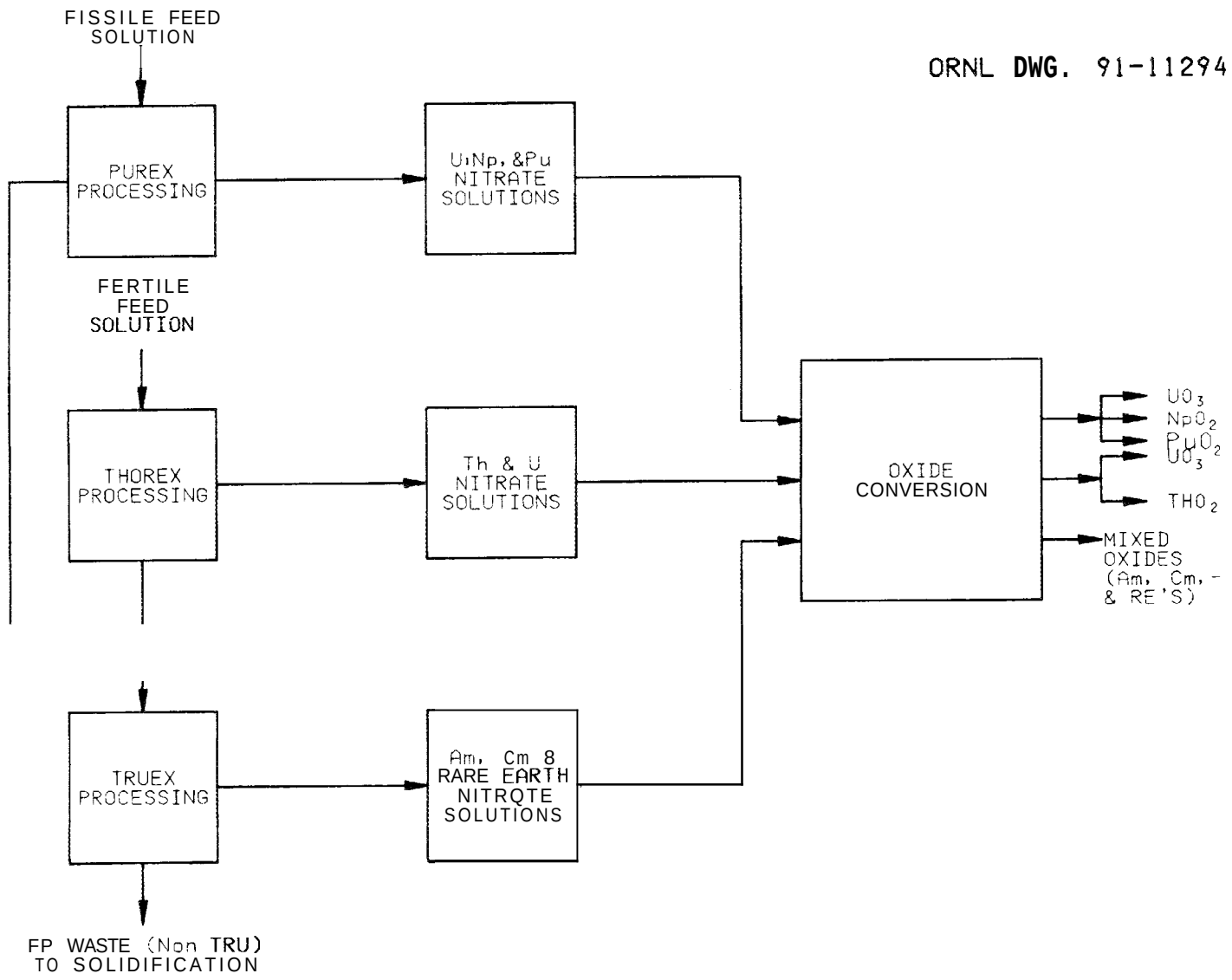

Fig. 7.2. Solvent extraction processing and oxide conversion.

necessary. Before dissolution to make solvent extraction feed, the carbon associated with the kernels (inner pyrolytic carbon coatings and metal carbides) is removed in a second burning, likely fluid-bed combustion. This second burning operation is carried out to ensure that no significant quantity of organic compounds are formed in nitric dissolution which might be deleterious to subsequent solvent extraction operations. The ash is conveyed to a dissolution vessel where it is leached with nitric acid (HNO_3-HF for ashes of fertile particles). The resultant leach liquor is combined with the hull rinse liquid (dilute HNO_3, clarified, and adjusted to the proper concentrations of heavy metal (200-300 g/L) and nitric acid (2-3 *M*).

Head-end operations have not been completely developed. Graphite burning generates large amounts of finely divided solids (soot). Additional development work is required to ensure complete combustion of these small particles. Remote equipment suitable for all of the solids handling and collection requirement would also require development and demonstration.

7.3 SOLVENT EXTRACTION

All actinides are recovered so that a nontransuranic fission product waste is produced (Fig. 7.2). Uranium, neptunium, and plutonium are recovered from fissile particle feed solutions by the Purex process[3] which employs TBP extractant in a normal paraffin hydrocarbon as the solvent phase. The same extraction solvent can be used to also recover thorium when flowsheet conditions are changed to the Thorex process[4] mode of operation. Purex plants at Hanford and Savannah River have operated satisfactorily with Thorex flow sheets. The HLLW resulting from either Purex or Thorex processes can probably be rendered a nontransuranic waste by using the TRUEX process to co-extract americium (Am) and curium (Cm). The rare earth fission products are also co-extracted along the Am-Cm. Thermal denitration or oxalate precipitation-calcination can be used to convert the solvent extraction product solutions of heavy metal nitrates to their oxides. The nontransuranic (non-TRU) fission product waste solution can be converted to a suitable solid form such as borosilicate glass.

The general status of the various flow sheet operations are as follows:

- Head end—graphite crushing and burning, particle crushing secondary burning, and ash dissolution have been carried out in cold engineering-scale studies.[15,16] Also some confirmatory work on burning and ash dissolution has been done on irradiated specimens in small-scale hot cell work. However, problems remain to be solved in developing a satisfactory graphite burner and solids handling equipment.

- Solvent extraction—no major developments on Purex or Thorex Process required because operations are not significantly different than have previously been conducted in plant operations. The TRUEX process has only been developed on a laboratory scale. Pilot scale work in hot cells will be required to develop and demonstrate the process.

- Off-gas treatment—methods exist for the removal of the various radioactive gases but development will be required for an integrated treatment system.

A substantial development program would also be required to permit confident design of an efficiently operable, fully remote reprocessing facility. A considerable effort and lead time will be required to develop a plant design and associated data base that meet present day environmental, health, and safety requirements imposed by state and federal agencies.

7.7 REFERENCES

1. L. M. Ferris, "Head-End Processes for Graphite Based and Carbide Reactor Fuels," pp 121-170 in *Progress in Nuclear Energy Series III: Process Chemistry*, Vol. 4, ed., C. E. Stevenson, E. A. Mason, and A. T. Gresky, Pergamon Press, Oxford, 1970.

2. E. P. Horowitz, et al., "The TRUEX Process—A Process for the Extraction of Transuranium Elements from Nitric Acid Utilizing Modified Purex Solvent, Solvent Extraction and Ion Exchange," *Journal of Solvent Extraction and Ion Exchange*, **3**, 75-109 (1985).

3. J. L. Swanson, "Purex Process Flowsheets," pp. 55-80 in *Science and Technology of Tributyl Phosphate Vol III. Applications of Tributyl Phosphate in Nuclear Fuel Reprocessing*, ed., W. W. Schulz, L. L. Burger, J. D. Navratil, and K. P. Bender, CRC Press Inc., Boca Raton, Florida, 1990.

4. W. D. Bond, "Thorex Process," pp. 225-248 in *Science and Technology of Tributyl Phosphate, Vol. III. Applications of Tributyl Phosphate in Nuclear Fuel Reprocessing*, ed., W. W. Schulz, L. L. Burger, J. D. Navratil, and K. P. Bender, CRC Press Inc. Boca Raton, Florida, 1990.

5. J. C. Mailen and L. M. Toth, "Chemistry of Volatile Fission Products, in Light Water Reactor Fuel Cycle," pp. 163-190 in *The Light-Water Reactor Nuclear Fuel Cycle*, ed., R. G. Wymer and B. L. Vondra, CRC Press Inc, Boca Raton, Florida, 1981.

6. J. W. Snider and S. V. Kaye, "Process Behavior and Environmental Assessment of ^{14}C Releases from an HTGR Fuel Reprocessing Facility," in the Proceedings of the ANS-AIChE Topical Meeting, Sun Valley, Idaho, August 5-6, 1976.

7. W. Davis, Jr., Carbon-14 Production in Nuclear Reactors, ORNL/NUREG/TM-12, Union Carbide Corporation, Union Carbide Corporation, Oak Ridge National Laboratory, February 1977.

8. O. O. Yarbro, F. E. Harrington, and D. S. Joy, *Effluent Control in Fuel Reprocessing Plants*, ORNL/TM-3899, Union Carbide Corporation, Oak Ridge National Laboratory, March 1974.

9. A. G. Croff, "Radioactive Waste Management in Light Water Reactor Fuel Cycle," pp. 191-242 in *The Light-Water Reactor Nuclear Fuel Cycle*, ed., R. G. Wymer and B. L. Vondra, CRC Press Inc., Boca Raton, Florida, 1981.

10. A. G. Croff, *An Evaluation of Options Relative to the Fixation and Disposal of ^{14}C-Contaminated CO_2 as $CaCO_3$*, ORNL/TM-5171, Union Carbide Corporation, Oak Ridge National Laboratory, April 1976.

11. L. H. Brooks, A. L. Lotts, and R. G. Wymer, "Progress in the Thorium-Uranium 233 Reprocessing Technology," pp. 257-267 in the Proceedings of ANS Topical Meeting on Gas-Cooled Reactors: HTGR and GCFBR, (CONF-740501) May 2-10, 1974.

12. *National HTGR Fuel Recycle Development Program Plan*, ORNL-4702, Rev. 1, Union Carbide Corporation, Oak Ridge National Laboratory, (August 1973).

13. W. D. Burch and A. L. Lotts, "Developments in Reprocessing Technology for High-Temperature and Fast Breeder Fuels," pp. 673-691, in *Proceedings of IAEA International Conference on Nuclear Power and Its Fuel Cycle*, Vol. 3, May 2-13, 1977.

14. E. R. Merz, G. Kaiser, and E. Zimmer, "Progress in the Th-^{233}U Recycle Technology," pp. 268-287 in the Proceedings of ANS Topical Meeting on Gas-Cooled Reactors: HTGR and GCFBR, (CONF-740501), May 2-10, 1974.

15. D. T. Young, *Fluidized Combustion for Beds of Large, Dense Particles in Reprocessing HTGR Fuel*, GA-A14327 (March 1977).

16. H. H. Yip, *The General Atomic Reprocessing Pilot Plant: Engineering Scale Dissolution System Description*, GA-A15298 (April 1979).

8. SCHEDULES AND COSTS

This chapter presents a preliminary evaluation of the schedule and costs for the various options for the disposal of wastes from both existing and future HTGR scenarios. This scoping evaluation is not the result of detailed engineering studies (feasibility studies, conceptual designs studies) but is based on the authors' experience and a series of assumptions. No attempt is made to include any use of HTGRs from the weapons program, but the future HTGR scenario could, most likely, include this possibility. Estimates are made for the cost of development facilities (capital requirement), operating (annual not including any capital consideration), and the resulting schedule and suitability of the option for the use of the planned LWR repository. The estimates presented in Table 8.1, are at best ±35%, but should be helpful showing relative costs or in selecting an option to be examined in depth by detailed engineering studies.

The present scenario **(now)** includes both the FSV and Peach Bottom reactors but does not include any future growth in the use of HTGRs. The **future** scenario is assumed to be at least an order of magnitude larger than the present scenario and to be ongoing. The present scenario, as defined, would result in disposal of resulting wastes in a 10-year operating period but could be done in less time.

8.1 DEVELOPMENT COSTS

Development would address both experimental and paper studies to document the answers to the questions posed in the body of the report, such as;

- combustibility of graphite,
- requirements for acceptability of wastes in the repository,
- demonstration of the separation of fuel and graphite,
- identification of proper processes and the sequence to be deployed for the separation options requirements such as handling ^{129}I, ^{3}H, Kr, and ^{14}C.

Table 8.1. Estimated requirements for **now** and **future** options

	Fuel/graphite separation			
	Whole block disposal	Mechanical	Burning	Reprocessing
Now				
Development cost,[a] $M	30	50	100	200
Facility cost, $M	10	60	200	600
Operating cost, $M/year	2	6	40	100
Project schedule, years	4—14	8—18	12—22	18—28
High-level waste volume	HIGH	MEDIUM	LOW/HIGH[b]	LOW
Suitability for repository	HIGH	MEDIUM	LOW	LOW
Future				
Development cost, $M/year	30	50	100	200
Facility cost, $M	30	180	400	1500
Operating cost, $M/year	6	15	80	180
Project schedule, years	4 +	8 +	12 +	18 +
High-level waste volume	HIGH	MEDIUM	LOW/HIGH[b]	LOW
Suitability for repository	HIGH	MEDIUM	MEDIUM	MEDIUM

[a]Does not include qualification costs. Qualification of a new waste form is expected to cost $50-200 million and require 3-5 years.
[b]Low if CO_2 can be fixed and treated as low-level waste.

9. CONCLUSIONS

HTGR fuel is markedly different from the common fuel, that of LWR that will be placed in a repository. Several options are available for disposal of HTGR spent fuel: 1) whole block disposal, 2) disposal after separation of graphite and spent fuel, and 3) disposal after rather complete chemical processing.

It is technically feasible to consider all of the options at this time; that is, there are sufficient data and information to indicate that all of them can be accomplished from a process point-of-view. What is not known in each case is the exact performance capability of the resultant waste forms. From the standpoint of process cost and schedule (not considering repository cost or value of fuel that might be recycled), the options must be ranked as follows in order of increased cost and longer schedule to perform the option: 1) whole block, 2a) physical separation, 2b) chemical separation, and 3) complete chemical processing.

9.1 CONCLUSIONS ON WHOLE BLOCK HTGR SPENT FUEL DISPOSAL

The most direct, perhaps the most satisfactory, and certainly the least expensive option (if repository volume costs are not considered), is to dispose of the fuel as whole blocks, in which case the fuel will be encased in massive quantities of graphite. No processing is required for this option. Research by the Germans indicate that the "as irradiated" fuel element is suitable as a waste form for a salt repository. Scoping calculations were conducted on the behavior of HTGR fuel elements under oxidizing repository conditions as would be expected at Yucca Mountain.

The following are preliminary conclusions from consideration of the whole block option:

- Whole block HTGR spent fuel will meet regulatory waste acceptance criteria for a repository.

- The projected performance of whole block HTGR spent fuel is significantly better than LWR spent fuel.

- The available information suggests that the HTGR fuel assembly may be a superior waste form with repository performance characteristics significantly better than conventional waste forms.

- The very high performance is a result of the graphite block; thus, there are major incentives from the perspective of performance in the repository to not separate the fuel from the graphite.

- The whole block disposal option does have the disadvantage of requiring a high volume of repository space per unit of heavy metal in the spent fuel because of the volume of graphite inherent in HTGR fuel designs. However, larger waste containers and alternate emplacement strategies may mitigate the cost impact associated with the larger volume.

9.2 CONCLUSIONS ON DISPOSAL AFTER SEPARATION OF GRAPHITE AND SPENT FUEL

A second option requires the separation of the fuel from the graphite, by physical means or by burning. In either case, disposal of the remaining graphite or the "fixed" ^{14}C remains a problem that can be solved technically. However, the option is considerably more expensive and may not be more desirable from an environmental point-of-view than the whole block option. Some development work is required to implement this option.

Preliminary conclusions concerning the option of disposal after separation of the graphite from the spent fuel follow:

- It is feasible to separate by physical techniques, such as simply pushing the fuel rods out of the fuel block or by mechanical means such as crushing and screening, but it is not known how efficient (i.e., clean) the separation will be.

- It is feasible to separate by burning, either whole fuel elements or crushed fuel elements, with effective partitioning of the particles of spent fuel and with effective processing of the gaseous products.

- In the case of burning, if the CO_2 must be fixed as $CaCO_3$, the volume of waste will be increased significantly over the volume of the original fuel elements or separated graphite blocks.

- The products of either burning or physical separation that contain the bulk carbon may be sufficiently low in radiation level to qualify for disposal as low level radioactive waste, but this cannot be proven at this time on the basis of existing information.

- This method may be more attractive for future spent fuel elements that have been designed for physical separation of bulk graphite from the spent fuel, and there may be methods to enhance this possibility.

- This option has the advantage of occupying less volume for high level waste disposal, but it may be necessary to encase the spent fuel in some type of matrix.

9.3 CONCLUSIONS ON DISPOSAL WITH DISSOLUTION OF FUEL

The third option requires separation of the fuel and solvent extraction to separate waste and fuel components of the spent fuel. Probably the only time this option will be used is when it is desirable to recover the fuel for recycling. While it is technically feasible to utilize this option, substantial development must be done before facilities can be designed and operated for this option.

Conclusions regarding this option follow:

- Technology has been demonstrated at sufficient scale and depth to give confidence that this option could be employed.

- Because of the fact that the process flow sheets must be demonstrated at pilot or prototypical scale with irradiated fuel and extensive facilities are required for production capability, this option should be considered only for cases involving substantial future deployment of HTGRs with recycle of fuel.

- Technology is available for handling the waste streams and for placing them in suitable forms for disposal.

The assessments and analyses of this report that deal with the performance of HTGR spent fuel in a HLW repository were prepared in the absence of a Yucca Mountain site-specific performance assessment. When such an assessment is issued, the issue of HTGR spent fuel disposal may need to be re-evaluated.

Appendix A. DETAILS OF FORT ST. VRAIN FUEL

APPENDIX A: DETAILS OF FT. ST. VRAIN FUEL

A.1 GRAPHITE

The additional details of FSV fuel included in this appendix came from two of the principal sources of information for Sect. 3.[1,2]

The H series graphites have these specifications on impurities:

boron	5 ppm
iron	100 ppm
vanadium plus titanium	100 ppm
nitrogen (est.)	25 ppm
total ash	1000 ppm

A.2. VARIATION IN DESIGN OF FUEL BLOCKS

In addition to the standard fuel block shown in Fig. 3.1, there are eight variants for specialized functions:

control fuel block,
bottom control fuel block,
neutron source block,
standard block with enlarged handling hole,
control block with enlarged handling hole,
bottom control block with enlarged handling hole,
fuel test blocks, and
californium neutron source block.

All of these variants have the same overall configuration and differ only in some specific detail. The most obvious difference is in the control blocks, which have three large holes for the insertion of control rods (Fig. A.1.). The next most obvious difference is in the bottom blocks, where the fuel does not extend the whole length of the block.

A.3. FUEL STICK IMPURITY SPECIFICATIONS

The impurity specifications for the fuel rods are:

iron	< 500 ppm
sulfur	<1200 ppm
titanium	< 50 ppm
vanadium	< 50 ppm
hydrogen	< 200 ppm
residual ash	< 300 ppm (at 900°C)
water	< 400 ppm
nitrogen (est.)	25 ppm
total boron equivalent	5 ppm

A.4. WEIGHTS OF FUEL BLOCKS AND COMPONENTS

Table A.1 gives the total weights of various fuel block types, and also the weights of the primary components, namely, the graphite block body, fuel rods, and poison rods.

A.5. RESULTS OF BURNUP CALCULATIONS

The results of burnup calculations for the fuel elements in three discharged core segments are stored on floppy disks in the format shown in Table A.2 for a representative fuel block. In order to establish the accuracy of the calculated values for burnup, measured and calculated average values for surveillance element 1-1773 were compared by GAC, using three different calculational methods. The calculated vaules were somewhat lower

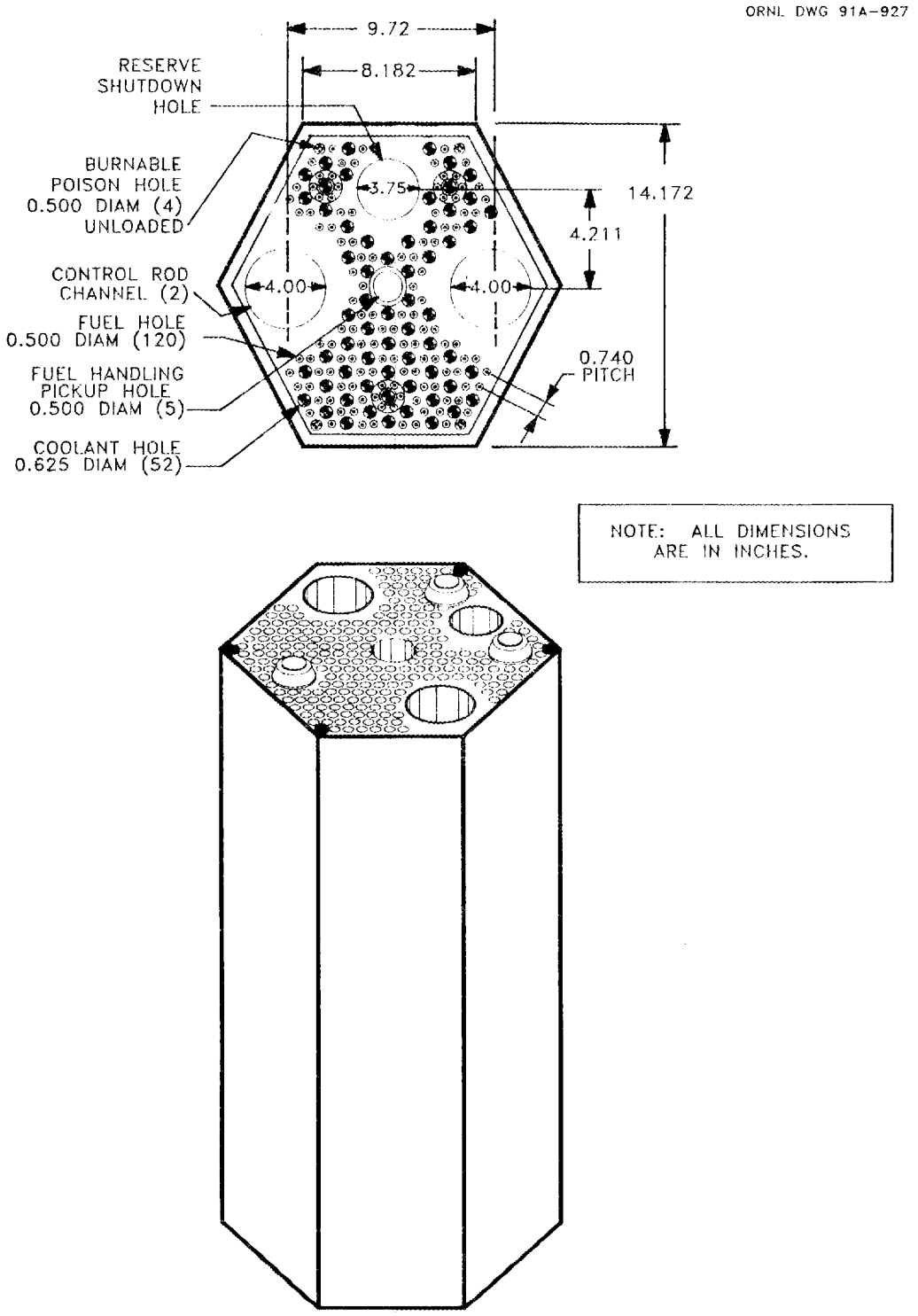

Fig. A.1. Control fuel elements and surveillance control element.

Table A.1. FSV fuel element component weights[a]

Element Total Weights	
Element type	Weight
Standard	128 kg
Surveillance	128 kg
Neutron source	128 kg
Californium neutron source	128 kg
Test	126 kg
Bottom control	111 kg
Control	109 kg
Surveillance control	109 kg
	Component Weights
Graphite body:	
Regular fuel block	86 kg
Control rod fuel block	85 kg
Bottom control rod fuel block	94 kg
Fuel rod[b]	
Thorium	4.2 g
Uranium	0.2 g
Silicon	1.3 g
Coatings	6.4 g
Matrix	1.3 g
Poison rod (boron carbide)	100 g

[a]All weights are approximate.

[b]This is for an individual fuel rod, which is about 1.25-cm (0.5-in.) diameter by 7.6-cm (3-in.) long. (NOTE: This is an early fuel stick design. The length was subsequently shortened to 2 in. because of warpage in the longer length.)

Table A.2. Sample of fuel accountability data

Serial Number: 1-1773 — Accountability date: 3/31/86

Core location: Region 18, Column 7, layer 7

Nuclide	Heavy metal weights (g) Initial	Current
^{232}Th	8,331.77	8,056.46
^{231}Pa	.00	.03
^{232}U	.00	.03
^{233}U[a]	.00	152.78
^{234}U	.00	14.19
^{235}U	.00	1.58
^{236}U	.00	.10
Fissile Particles		
^{232}Th	1,832.23	1,771.69
^{231}Pa	.00	.01
^{232}U	.00	.01
^{233}U[a]	.00	33.60
^{234}U	3.24	5.30
^{235}U	407.07	123.40
^{236}U	1.24	49.72
^{238}U	25.46	22.58
^{237}Np	.00	3.44
^{238}Pu	.00	.72
^{239}Pu[b]	.00	.54
^{240}Pu	.00	.24
^{241}Pu	.00	.20
^{242}Pu		.0013
Total	10,601.00	10,236.76
Total fissile uranium	407.07	311.36
Total uranium	437.00	403.29
Total fissile plutonium	.00	.75
Total plutonium	.00	1.85
Effective ^{233}U enrichment	.00	46.21%
Effective ^{235}U enrichment	93.15%	30.99%
^{232}U	.00	90.79 ppm
Fertile particle fima[c]	.00	1.29%
Fissile particle fima	.00	11.27%
Burnup (MWd/MT)		32,601.50
Cumulative EFPD[d]		657.30

[a]Includes full decay of ^{233}Pa.
[b]Includes full decay of ^{239}Np.
[c]Fission per Initial Metal Atom
[d]Equivalent Full Power Days

(4 to 18%) than the measured values. A comparison of measured and calculated uranium isotopic concentrations for the same surveillance element (1-1773) was also done. The ^{234}U and ^{235}U concentrations are slightly lower than predicted, while the ^{236}U and ^{238}U concentrations are higher than predicted. The ^{233}U concentration was not reported.

A.6 RADIOLOGICAL CHARACTERISTICS AND THERMAL POWER

The radiological characteristics of average FSV fuel irradiated to 100,000 MWd/Mt have been calculated for various decay times ranging from 120 days to 1 million years. The planned equilibrium burnup was 100,000 MWd/MTIHM. The calculated radioactivity for selected nuclides as a function of time is shown in Table A.3; the calculated thermal power is given in Fig. A.2. The "bump" at 10^4 to 10^5 years is due to the decay daughters of ^{233}U in the fertile particles. For fuels with less burnup, acceptable first approximations of radioactivity and thermal power can be obtained by using linear interpolation from the values at 100,000 MWd/MTIHM. For transuranic content, linear interpolation will give a conservative (i.e., too high) result.

For repository disposal, thermal output is a controlling parameter. The thermal power of FSV fuel can be estimated from Fig. A.2. At 10 years decay time, for example, the thermal output per MTIHM (i.e., U plus Th) is about 3400 W. Since one fuel element contains 10 kg of heavy metal, the thermal power per full-burnup block would be about 34 W. However, the maximum burnup achieved is only half of the planned maximum, and the average is closer to one-third, or 11 W. Allowing for the 10% discrepancy between calculated and measured values of burnup, a value of about 12 W per FSV element is obtained. At 5 years cooling, the value would be roughly twice as much. For future HTGR fuel, full burnup should be assumed, or 35 W per element after 10 years cooling, or 70 W per element after only 5 years.

Table A.3. Radioactivity of Fort Saint Vrain reactor spent fuel

BASED ON ONE MTIHM; 100,000 MWD/MTIHM

CURIES

NUCLIDE	120.00	1.0YR	10.0YR	100.0YR	1000.0YR	10.0KY	100.0KY	1.0MY
				ACTINIDES AND DAUGHTERS				
TL207	0.0	3.795E-03	4.760E-02	1.718E-01	1.765E-01	1.51BE-DI	5.180E-02	3.432E-02
TL208	0.0	1.404E+01	5.897E+01	2.557E+01	3.789E-02	3.348E-02	3.348E-02	3.347E-02
TL209	0.0	2.747E-04	3.957E-03	4.060E-02	3.896E-01	2.583E+00	2.941E+00	7.437E-02
PB209	0.0	1.272E-02	1.832E-01	1.880E+00	1.804E+01	1.196E+02	1.362E+02	3.443E+00
PB210	0.0	1.835E-07	3.588E-05	2.118E-03	7.214E-02	2.081E+00	1.567E+01	2.624E+00
PB211	0.0	3.806E-03	4.773E-02	1.723E-01	1.770E-01	1.522E-01	5.195E-02	3.441E-02
PB212	0.0	3.909E+01	1.661E+02	7.118E+01	1.054E-01	9.317E-02	9.317E-02	9.317E-02
PB214	0.0	1.813E-05	2.651E-04	3.157E-03	7.216E-02	2.081E+00	1.567E+01	2.625E+00
61210	0.0	1.835E-07	3.589E-05	2.118E-03	7.234E-02	2.081E+00	1.567E+01	2.624E+00
BI211	0.0	3.806E-03	4.773E-02	1.723E-01	1.370E-01	1.522E-01	5.195E-02	3.441E-02
BI212	0.0	3.909E+01	1.641E+02	7.118E+01	1.054E-01	9.317E-02	9.317E-02	9.317E-02
BI213	0.0	1.272E-02	1.832E-01	1.880E+00	1.804E+01	1.196E+02	1.362E+02	3.443E+00
BI214	0.0	1.813E-05	2.651E-04	3.157E-03	1.21BE-02	2.081E+00	1.567E+01	2.625E+00
PO210	0.0	5.514E-08	3.589E-05	2.118E-03	7.214E-02	2.081E+00	1.567E+01	2.624E+00
PO212	0.0	2.504E+01	1.052E+02	4.560E+01	6.756E-02	5.969E-02	5.969E-02	5.969E-02
PO213	0.0	1.244E-02	1.792E-01	1.839E+00	1.765E+01	1.170E+02	1.332E+02	3.369E+00
PO214	0.0	1.812E-05	2.641E-04	3.157E-03	7.214E-02	2.081E+00	1.567E+01	2.624E+00
PO215	0.0	3.806E-03	4.773E-02	1.723E-01	1.770E-01	1.522E-01	5.195E-02	3.441E-02
PO216	0.0	3.909E+01	1.641E+02	7.118E+01	1.054E-01	9.317E-02	9.317E-02	9.317E-02
PO218	0.0	1.813E-05	2.652E-04	3.158E-03	1.217E-02	2.081E+00	1.567E+01	2.625E+00
AT217	0.0	1.272E-02	1.832E-01	1.880E+00	1.804E+01	1.196E+02	1.362E+02	3.443E+00
RN219	0.0	3.806E-03	4.773E-02	1.723E-01	1.770E-01	1.522E-01	5.195E-02	3.441E-02
RN220	0.0	3.909E+01	1.641E+02	7.118E+01	1.054E-01	9.317E-02	9.317E-02	9.317E-02
RN222	0.0	1.813E-05	2.652E-04	3.158E-03	7.217E-02	2.081E+00	1.567E+01	2.625E+00
FR221	0.0	1.272E-02	1.832E-01	1.880E+00	1.804E+01	1.196E+02	1.362E+02	3.443E+00
RA223	0.0	3.806E-03	4.773E-02	1.723E-01	1.770E-01	1.522E-01	5.195E-02	3.441E-02
RA224	6.295E+04	3.909E+01	1.641E+02	7.118E+01	1.054E-01	9.317E-02	9.317E-02	9.317E-02
RA225	0.0	1.272E-02	1.832E-01	1.880E+00	1.804E+01	1.196E+02	1.362E+02	3.443E+00
RA226	0.0	1.813E-05	2.652E-04	3.158E-03	7.217E-02	2.081E+00	1.567E+01	2.625E+00
RA228	9.849E-01	9.251E-01	4.210E-01	9.320E-02	9.317E-02	9.317E-02	9.317E-02	4.317E-02
AC225	0.0	1.272E-02	1.832E-01	1.880E+00	1.804E+01	1.196E+02	1.362E+02	3.443E+00
AC227	0.0	3.806E-03	4.768E-02	1.722E-01	1.770E-01	1.522E-01	5.195E-02	3.441E-02
AC228	9.746E-01	9.252E-01	4.211E-01	9.320E-02	9.317E-02	9.317E-02	9.317E-02	9.317E-02
TH227	0.0	3.753E-03	4.707E-02	1.699E-01	1.746E-01	1.501E-01	5.123E-02	3.394E-02
TH228	0.0	3.909E+01	1.640E+02	7.118E+01	1.054E-01	9.317E-02	9.317E-02	5.317E-02
TH229	0.0	1.272E-02	1.832E-01	1.880E+00	1.804E+01	1.196E+02	1.362E+02	3.443E+00
TH230	6.225E-02	6.241E-02	6.459E-02	8.732E-02	3.316E-01	2.654E+00	1.553E+01	2.623E+00
TH231	0.0	3.412E-02	3.412E-02	3.412E-02	3.413E-02	3.420E-02	3.442E-02	3.441E-02
TH232	9.317E-02	9.317E-02	9.317E-02	9.317E-02	9.317E-02	9.317E-02	9.317E-02	9.317E-02
TH234	5.760E+01	5.065E-02	9.101E-04	9.101E-04	9.101E-04	9.101E-04	9.101E-04	9.100E-04
84231	1.799E-01	1.799E-01	1.799E-01	1.796E-01	1.769E-01	1.521E-01	5.193E-02	3.441E-02
PA233	1.187E+06	2.242E+03	9.919E-01	9.954E-01	1.016E+00	1.019E+00	9.899E-01	7.396E-01
PA234M	0.0	5.065E-02	9.101E-04	9.101E-04	9.101E-04	9.101E-04	9.101E-04	9.100E-04
PA234	5.760E+01	6.660E-05	1.183E-06	1.163E-06	1.183E-06	1.183E-06	1.183E-06	1.183E-06

Table A.3 (continued)

CURIES

NUCLIDE	120.0D	1.0YR	10.0YR	100.0YR	1000.0YR	10.0KY	100.0KY	1.0MY
				ACTINIDES AND DAUGHTERS				
U232	1.806E+02	1.795E+02	1.646E+02	6.920E+01	1.195E-02	2.793E-40	0.0	0.0
U233	2.001E+02	2.007E+02	2.0 07E+02	2.006E+02	1.998E+02	1.921E+02	1.299E+02	3.3 16E+00
U234	2.686E+01	2.688E+01	2.714E+01	2.892E+01	3.056E+01	2.979E+01	2.308E+01	1.801E+00
U235	3.412E-02	3.41 2E-02	3.41 2E-02	3.4 12E-02	3.4 13E-02	3.420E-02	3.4 42E-02	3.441E-02
U236	0.0	1.507E-07	2.235E-06	2.551E-05	2.5 3BE-04	1.656E-03	2.528E-03	2.461E-03
U238	9.101 E-04	9. IOIE-04	9.10 1E-04	9.101E-04	9.101E-04	9.1 OIE-04	9.101E-04	9.100E-04
NP237	9.918E-01	9.9 18E-01	9.919E-01	9.9 54E-01	1.0 16E+00	1.019E+00	9.899E-01	7.396E-01
NP239	0.0	3.285E+00	3.282E+00	3.254E+00	2.99 1E+00	1.284E+00	2.740E-04	5.3 39E-41
PU238	1.054E+04	1.049E+04	9.7 73E+03	4. 800E+03	3.933E+00	I.652E-20	0.0	0.0
PU239	8.526E+00	8.526E+00	8.5 24E+00	8.512E+00	8.374E+00	6.914E+00	5.599E-01	3.087E-12
PU240	7.562E+00	7.600E+00	8.023E+00	8.9 53E+00	8.169E+00	3.146E+00	2.252E-04	0.0
PU241	4.339E+03	4.201E+03	2.724E+03	3.5 78E+01	5.475E-18	0.0	0.0	0.0
AM241	7.700E+00	1.229E+01	6.094E+01	1.328E+02	3. 164E+01	1.706E-05	0.0	0.0
AM242M	5.339E-01	5.323E-01	5.109E-01	3.3 89E-01	5.594E-03	8.4116-21	0.0	0.0
AM242	0.0	5.296E-01	5.083E-01	3.3 72E-01	5.566E-03	8.369E-21	0.0	0.0
AM243	3.285E+00	3.285E+00	3. 282E+00	3.2 54E+00	2.991E+00	1.284E+00	2.740E-04	5.339E-41
CM242	2.385E+03	8.420E+02	4.213E-01	2.789E-01	4.603E-03	6.94 2E-21	0.0	0.0
CM243	8.766E-01	8.624E-01	6.929E-01	7.763E-02	2.4 21E-11	0.0	0.0	0.0
CM244	5.472E+02	5.333E+02	3.779E+02	1.206E+01	1.323E-14	0.0	0.0	0.0
SUBTOT	1.2 69E+06	1.903E+04	1.451E+04	5.8 22E+03	4.385E+02	1.217E+03	1.403E+03	6.1 70E+01
				FISSION PRODUCTS				
KR 85	5.074E+04	4.858E+04	2.715E+04	8.062E+01	4.476E-24	0.0	0.0	0.0
SR 89	3.484E605	1.202E+04	3.046E-16	0.0	0.0	0.0	0.0	0.0
SR 90	2.795E+05	2.751E+05	2.220E+05	2.401 E+04	1.296E-05	0.0	0.0	0.0
Y 90	2.809E+05	2.752E+05	2.221E+05	2.60 7E+04	1.29 7E-05	0.0	0.0	0.0
Y 91	4.003 E+05	2.190E+04	2.672E-13	0.0	0.0	0.0	0.0	0.0
ZR 95	5.460E+05	3.831E+04	1.309E-11	0.0	0.0	0.0	0.0	0.0
NB 95	1.050E+05	7.623E+04	2.906E-11	0.0	0.0	0.0	0.0	0.0
NB 95M	0.0	2.842E+02	9.709E-14	0.0	0.0	0.0	0.0	0.0
RU103	7.367E+04	9.726E+02	6.281E-23	0.0	0.0	0.0	0.0	0.0
RH103M	1.42 1E+04	8.768E+02	5.662E-23	0.0	0.0	0.0	0.0	0.0
RU106	7.200E+04	4.538E+04	9.312E+01	1.244E-25	0.0	0.0	0.0	0.0
RH106	7.279E+04	4.538E+04	9.312E+01	1.244E-25	0.0	0.0	0.0	0.0
SN123	2.566E+03	6.882E+02	1.507E-05	0.0	0.0	0.0	0.0	0.0
SB125	6.545E+03	5.533E+03	5.819E+02	9.629E-08	0.0	0.0	0.0	0.0
TE125M	0.0	1.265E+03	1.420E+02	2.349E-08	0.0	0.0	0.0	0.0
TE127	6.681E*04	1.368E+04	1.143E-05	0.0	0.0	0.0	0.0	0.0
TE127M	6.645E+04	1.397E+04	1.167E-05	0.0	0.0	0.0	0.0	0.0
TE129	2.139E+04	8.742E+01	3.090E-28	0.0	0.0	0.0	0.0	0.0
TE129M	2.114E+04	1.343E+02	4.748E-28	0.0	0.0	0.0	0.0	0.0
I129	0.0	1.233E-04	1.241E-04	1.241E-04	1.24 1E-04	1.240E-04	1.2 35E-04	1.187E-04
CS134	5.66 7E+03	4.522E+03	2.195E+02	1.622E-11	0.0	0.0	0.0	0.0
CS137	2.859E+05	2.815E+05	2.286E+05	2.8 58E+04	2.660E-05	0.0	0.0	0.0

Table A.3 (continued)

CURIES

NUCLIDE	120.0D	1.0YR	10.0YR	100.0YR	1000.0YR	10.0KY	100.0KY	1.0MY
				FISSION PRODUCTS				
BA137M	2.845E+05	2.663E+05	2.163E+05	2.703E+04	2.516E-05	0.0	0.0	0.0
BA140	2.747E+03	4.637E-03	0.0	0.0	0.0	0.0	0.0	0.0
LA140	3.102E+03	5.337E-03	0.0	0.0	0.0	0.0	0.0	0.0
CE141	1.683E+05	9.028E+02	3.299E-28	0.0	0.0	0.0	0.0	0.0
PR143	4.790E+03	1.729E-02	0.0	0.0	0.0	0.0	0.0	0.0
CE144	1.312E+06	7.215E+05	2.383E+02	3.679E-33	0.0	0.0	0.0	0.0
PR144	1.311E+06	7.215E+05	2.383E+02	3.679E-33	0.0	0.0	0.0	0.0
PR144M	0.0	8.658E+03	2.860E+00	4.415E-35	0.0	0.0	0.0	0.0
ND147	3.520E+02	7.438E-05	0.0	0.0	0.0	0.0	0.0	0.0
PM147	5.401E+05	4.523E+05	4.195E+04	1.974E-06	0.0	0.0	0.0	0.0
SM147	0.0	2.153E-06	1.221E-05	1.324E-05	1.324E-05	1.324E-05	1.324E-05	1.324E-05
SM151	6.771E+03	6.736E+03	6.285E+03	3.142E+03	3.067E+00	2.409E-30	0.0	0.0
EU154	4.026E+02	3.814E+02	1.847E+02	1.307E-01	4.LOBE-33	0.0	0.0	0.0
EU155	3.850E+03	3.505E+03	9.962E+02	3.429E-03	5.0	0.0	0.0	0.0
SUBTOT	6.418E+06	3.343E+06	9.672E+05	1.110E+05	3.067E+00	1.372E-04	1.368E-04	1.319E-04

NUCLIDES CONTRIBUTING < 0.0010 % ARE OMITTED

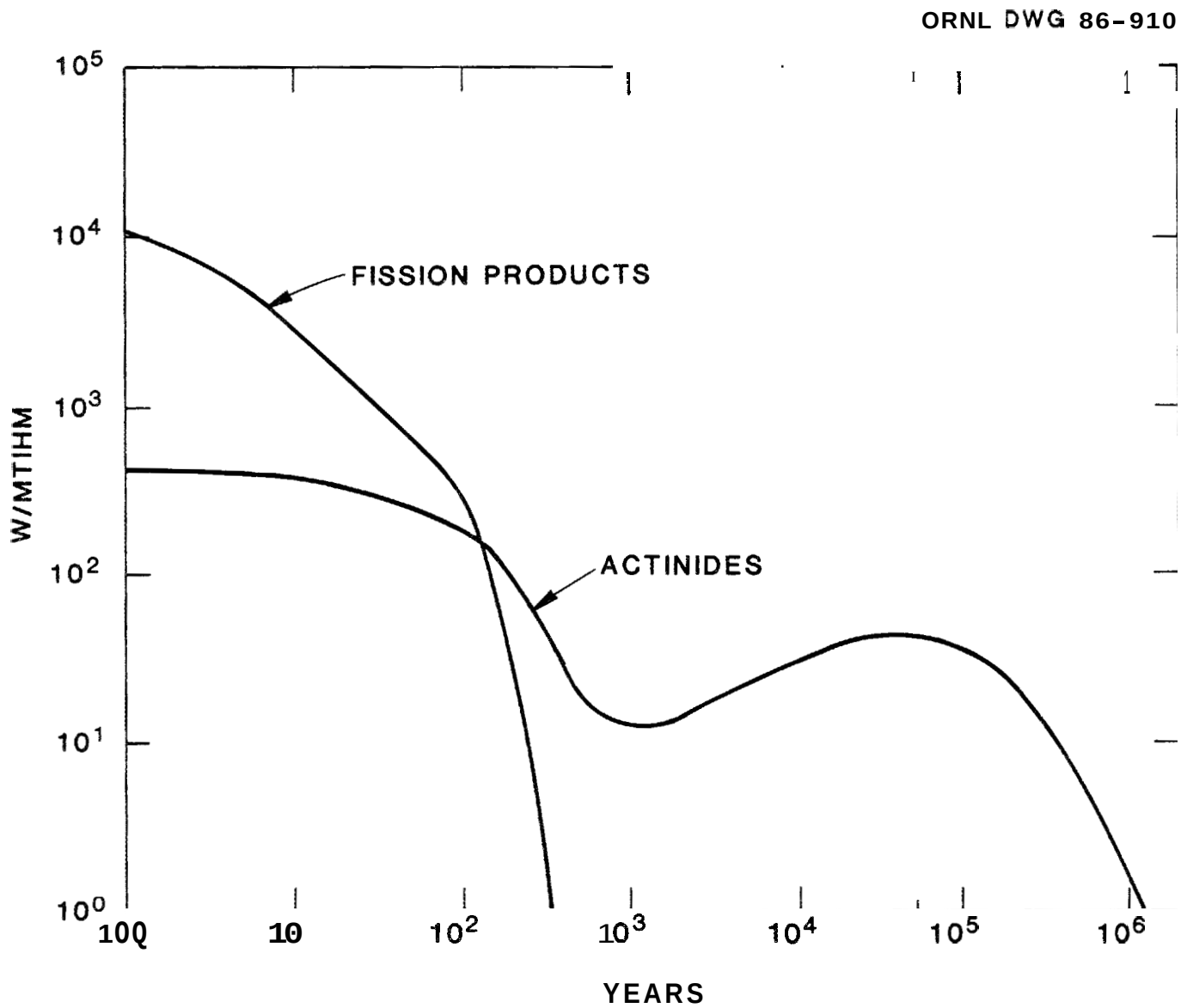

Fig. *k 2* . Decay heat for **FSV** spent fuel. (Basis: 1 MTIHM irradiated to 100,000 MWd/MTIHM.)

A.7 REFERENCES

1. U.S. Department of Energy, *Characteristics of Spent Fuel, High-Level Waste, and Other Radioactive Wastes Which May Require Long-Term Isolation*, DOE/RW-0184, Vols. 1-6 (December 1976) Vol. 7-8 (June 1988).
2. Morissette, R. P., and Tomsio, N., *Characterization of Fort St. Vrain Fuel*, ORNL/SUB-86022047/1 (Oct. 1986).

Appendix B. OXIDATION OF URANIUM OXIDE

APPENDIX B: OXIDATION OF URANIUM DIOXIDE

The U-O system is rather complex and has been studied extensively. It is well known that UO_2 oxidizes at low temperatures, with measurable rates in the temperature regime expected for a future repository. In fact, maintaining UO_2 in a stoichiometric condition is quite difficult, even at ambient temperature.

UO_2 follows this oxidation sequence (with one exception, which is temperature dependent):

Surface oxidation to UO_{2+}	(1)
Bulk oxidation to UO_{2+}	(2)
Bulk oxidation to U_4O_9	(3)
Bulk oxidation to U_3O_7	(4)
Bulk oxidation to U_3O_8	(5)
Bulk oxidation to UO_3	(6)

The UO_{2+} phase is a solid solution with the added oxygens placed interstitially within the cubic UO_{2+} structure. Since this represents an increase in the positive valence of the uranium, the lattice contracts slightly. This contraction opens up the grain boundaries, thus enhancing the diffusion of oxygen between the grains and into the bulk structure. The U_4O_9 phase, which is a line compound, may be viewed as the limiting composition of interstitial oxygen within a cubic structure and is the most dense oxide of uranium.

The U_3O_7 phase, which is also a line compound, has a tetragonal structure and forms next, but only at temperatures below about 350°C. Above that temperature, orthogonal U_3O_8 forms from U_4O_9. Any U_3O_7 formed at lower temperature, if heated above its transition temperature, disproportionates to U_4O_9 and U_3O_8. The U_3O_8 phase has a composition range that is temperature dependent, but nominally spans $UO_{2.56}$ to $UO_{2.67}$.

Oxidation beyond U_3O_8 to UO_3 does not occur spontaneously in dry air, but does occur if moisture is present, yielding a hydrated UO_3. Oxidation of UO_2 to U_4O_9, U_3O_7, or U_3O_8 is

apparently unaffected by moisture, although there is not complete agreement on this observation.

The phase sequence that occurs in oxidation is reversed when UO_3 is reduced with hydrogen.[1,2] The two sets of studies—oxidation and reduction—thus corroborate each other, but reduction requires higher temperatures than oxidation.

A score or more of excellent studies of UO_2 oxidation have been published, covering a wide range of temperature. A sampling is listed here:

Low Temperature (-130 to 50°C):

Anderson, et al.	(1955)	ref. 3

Medium Temperature (100 to 360°C):

Aronson, et al.	(1957)	ref. 4
Blackburn, et al.	(1958)	ref. 5
Hoekstra, et al.	(1961)	ref. 6
Walker	(1965)	ref. 7
Woodley, et al	(1989)	ref. 8

High Temperature (200 to 1000°C):

De Marco, et al.	(1959)	ref. 9
Peakall and Antill	(1960)	ref. 10
Scott and Harrison	(1963)	ref. 11

The oxidation study of greatest interest to the present evaluations is the one done at Hanford by Woodley, Einziger, and Buchanan.[8] They addressed directly the oxidation of spent (i.e., irradiated) LWR fuel, as taken from the fuel pins of Turkey Point fuel in its usual post-irradiated, fragmented condition. They measured the rate of oxidation at temperatures between 140 and 225°C in air atmospheres both wet (dew point of 14.5°C) and dry (dew point of -70°C). They expressed the temperature dependence in terms of the activation energy, for which they obtained a value of 27±4 kcal/mole. This is in the upper range of a diffusion controlled process. Other investigators found similar values for the activation energy:

Aronson, et al.	26.3 kcal/mol	ref. 4
Blackburn, et al.	21.7	ref. 5
Walker	26.4	ref. 7
Scott & Harrison	19.1	ref. 11

For a very high surface area UO_2, Walker found 32.2 kcal/mole for the activation energy. This probably reflects less diffusion control in the smaller particles.

The Hanford study was done in terms of weight gain per 200-mg sample and is directly applicable to the present analysis, since there is a one-to-one analogy between the study samples and the irradiated fuel in LWR spent fuel. In addition, the temperature range used is close to the projected cask surface temperature in a repository, and requires only a short extrapolation from 140 to 100°C. Over the time/temperature range studied, oxidation usually slowed drastically as the U_3O_7 composition was approached. Therefore, they expressed their rate results as fraction converted to U_3O_7 since the U_3O_7 composition was the effective upper limit of oxidation in their study. They found no effect from moisture, over a wide range of partial pressure of water. This suggests that oxygen is sorbed much stronger than water on the surface of UO_{2+} and U_4O_9.

Table B.1 lists rate data based on ref. 8. The "times to completion" values were based on the data presented at the first five listed temperatures. The reciprocal of the times is a rate which, when divided into 100 h, gives the fraction of UO_2 converted to U_3O_7 in 100 h. These rates were plotted in Fig. B.1 and extrapolated to 100°C, giving the value listed in Table B.1 for that temperature.

From these data, it is possible to estimate the rate of oxygen uptake by LWR spent fuel in a repository, and also the capacity (or sink) for oxygen from this reaction. A future repository is projected to contain 70,000 MT of uranium, as the dioxide. Complete oxidation of this to U_3O_7 (or $UO_{2.33}$) would then require 0.33 mol of oxygen (i.e., 0.165 mol of O_2) per mol of uranium:

TABLE B.1. Oxidation Rate of UO_2 to U_3O_7

Temp, °C	Time to Completion, h[a]	Rate, fraction converted per 100 h
225	350	0.286
200	800	0.125
175	3,000	0.033
175	5,200	0.019
140	14,000	0.007
100[b]	Not measured	0.0015[b]

[a]Based on R. E. Woodley, R. E. Einziger and H. C. Buchanan, Nucl. Technol. 85, 74-88, (April 1989).
[b]Extrapolated from Fig. B.1.

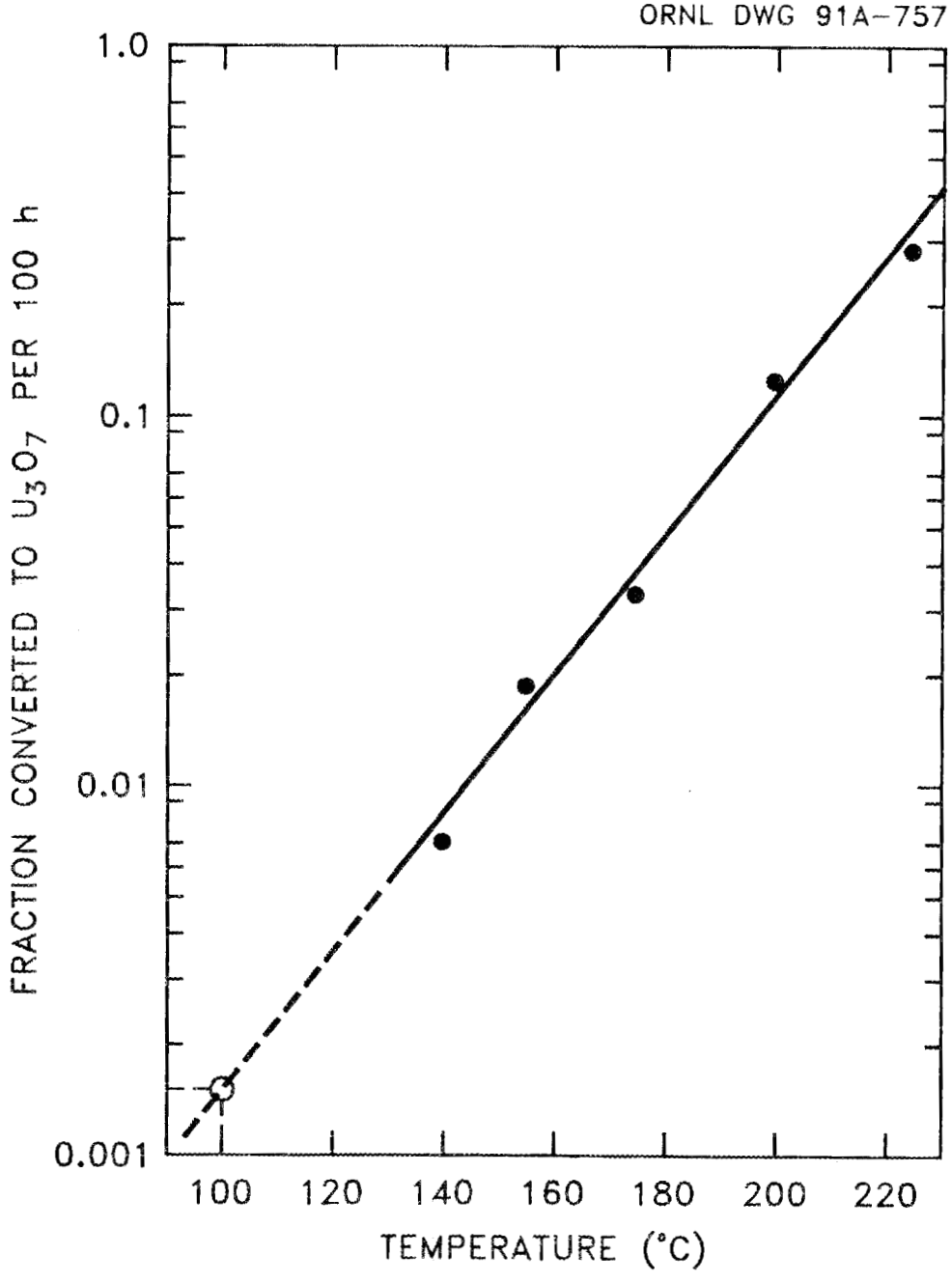

Fig. B.1. Air oxidation of UO_2 to U_3O_7 as a function of temperature.

$$Mol\ of\ O_2 = \frac{70{,}000 \times 10^6}{238}(0.165)$$

$$= 48 \times 10^6$$

$$MT\ of\ O_2 = \frac{moles \times 32}{10^6} = 1500$$

$$MT\ of\ air = 5 \times MT\ of\ O_2 = 7500$$

Using 1 x 10^{-3} g/cm^3 as the approximate density of air at the Yucca Mountain site, 7500 MT of air represent 7500 x 10^3 m^3.

If it is assumed that, initially, only the ~0.01% of projected leaker fuel is available to be oxidized, then 0.75 MT (or 750 m^3) of air would accomplish complete oxidation to U_3O_7. This could be the condition after 1000 years, the projected lifetime of the repository casks. After that, additional cladding failure can be anticipated. Eventually, and this will take many years, all of the fuel will be exposed to oxidation.

The rate of oxygen consumption can be calculated from the total capacity (as U_3O_7) and the fraction converted rates given in Table B.1. On an annual basis, the fraction converted is equal to 88 times the fraction per 100 h, or 61% at 140°C and 13% at 100°C. These percentages, when applied to the total capacity, yield 4600 MT of air per year at 140° or 1000 MT at 100°C. At 140°C, conversion to U_3O_7 will take about 1.6 years; at 100°C, about 8 years. If only the 0.01% of initially-breached fuel is exposed to oxygen, then the rate will be less by a factor of 10^4 but the conversion time (for the 0.01%) will be the same as above. As additional cladding breaches, additional oxidation will occur.

B.1 REFERENCES

1. K. J. Notz and M. G. Mendel, "X-Ray and Kinetic Study of the Hydrogen Reduction of γ-UO_3," *J. Inorg. Nucl. Chem.*, **14**, 55-64 (1960).

2. K. J. Notz, C. W. Huntington, and W. Burkhardt, "Hydrogen Reduction of Uranium Oxides," *Industrial and Engineering Chemistry Process Designs and Development*, **1**, 213 (1962).

3. J. S. Anderson, L. E. J. Roberts, and E. A. Harper, "The Oxides of Uranium, Part VII. The Oxidation of Uranium Dioxide," *J. Chem. Soc. (London)*, 3946-59 (1955).

4. S. Aronson, R. B. Roof, Jr., and J. Belle, "Kinetic Study of the Oxidation of Uranium Dioxide," *The Journal of Chem. Physics*, **17**, (No. 1) 137-44 (1956).

5. P. E. Blackburn, J. Weissbart, and E. A. Gulbransen, 1958. "Oxidation of Uranium Dioxide," *J. Phys. Chem.*, **62**, 902-8 (1958).

6. H. R. Hoekstra, A. Santoro, and S. Siegel, "The Low Temperature Oxidation of UO_2 and U_4O_9, *J. Inorg. Nucl. Chem.*, **18**, 166-78 (1960).

7. E. Y. Walker, "The Oxidation of Uranium Dioxides," *J. Appl. Chem.*, **15**, 128 (1965).

8. R. E. Woodley, R. E. Einziger, and H. C. Buchanan, *Nucl. Tech.*, **85**, 74-88 (1989).

9. R. E. DeMarco, et al., "Oxidation of UO_2 to U_3O_8," *The American Ceramic Society Bulletin*, **38**, (No. 7), 360-2 (1959).

10. K. A. Peakall and J. E. Antill, "Oxidation of Uranium Dioxide in Air at 350-1000°C," *J. Nucl. Mater.* **2**, (No. 2), 194-5 (1960).

11. K. T. Scott and K. T. Harrison, "Some Studies of the Oxidation of Uranium Dioxide," *J. Nucl. Mater.* **8**, (No. 3), 307-19 (1962).

Appendix C. OXIDATION OF GRAPHITE

APPENDIX C: OXIDATION OF GRAPHITE

Graphite is chemically stable and nonreactive in air at ambient temperature and even at moderately elevated temperatures. This fact is clearly demonstrated by the occurrence of natural graphite and by the widespread use of manmade graphite in many applications. Lampblack and other finely divided (i.e., high surface area) forms of carbon were formerly thought to be amorphous but are now known to be microcrystalline graphite. These are somewhat more reactive than bulk graphite because of their high surface area. The surface of carbon blacks (and activated charcoals especially) are very receptive to the adsorption of polar molecules such as SO_2 and H_2O, but not O_2.

Because of its importance in commerce, the oxidation of graphite by air has been studied extensively. In order to achieve measurable oxidation rates, temperatures above 400° C are normally employed. More recently, the use of graphite as a neutron moderator (and material of construction) in reactors has prompted oxidation studies in support of accident analysis scenarios. Table C.1 lists temperature ranges and activation energies for two classical studies and one very recent (still ongoing in fact) study at ORNL. All of these studies used bulk manmade graphite, albeit small samples of less than a gram. However, the results obtained were shown to be representative of bulk graphite. For carbon blacks and thin streaks of graphite on an inert substrate, the activation energies were 65 and 80 kcal/mol, respectively.

The rate data of Gulbransen and Andrew were reported in terms of grams of C oxidized per cm^2 per second for a bulk specimen, a unit which can be applied directly to FSV fuel. Extrapolation to 150° C (Fig. C.1; this was also done analytically) gives a rate of 1.05×10^{-17} g-C/cm^2/sec, or 33×10^{-11} g-C/cm^2/year. A single FSV fuel element has an area of 8133 $in.^2$ which, for the total FSV inventory of 2214 elements, gives an area of 1.16×10^8 cm^2. Combined with the above rate, this gives a calculated total oxidation rate of 3.8×10^{-2} g of C per year, or 38 kg in 1.0×10^6 years. At 100° C the corresponding value is 163 g of C in one million years. After the first thousand years, the repository temperature will be lower than 100° C. The work by Fuller, et al. is particularly germane to the present study because

Table C-1. Graphite Oxidation Studies

Author(s) (year)	Temperature range (°C)	E_a (kcal/mol)	Reference
Gulbransen and Andrew (1952)	425-575	36.7	1
Blyholder and Eyring (1957)	600-1300	42	2
Fuller, et al. (1991)	375-850	40	3

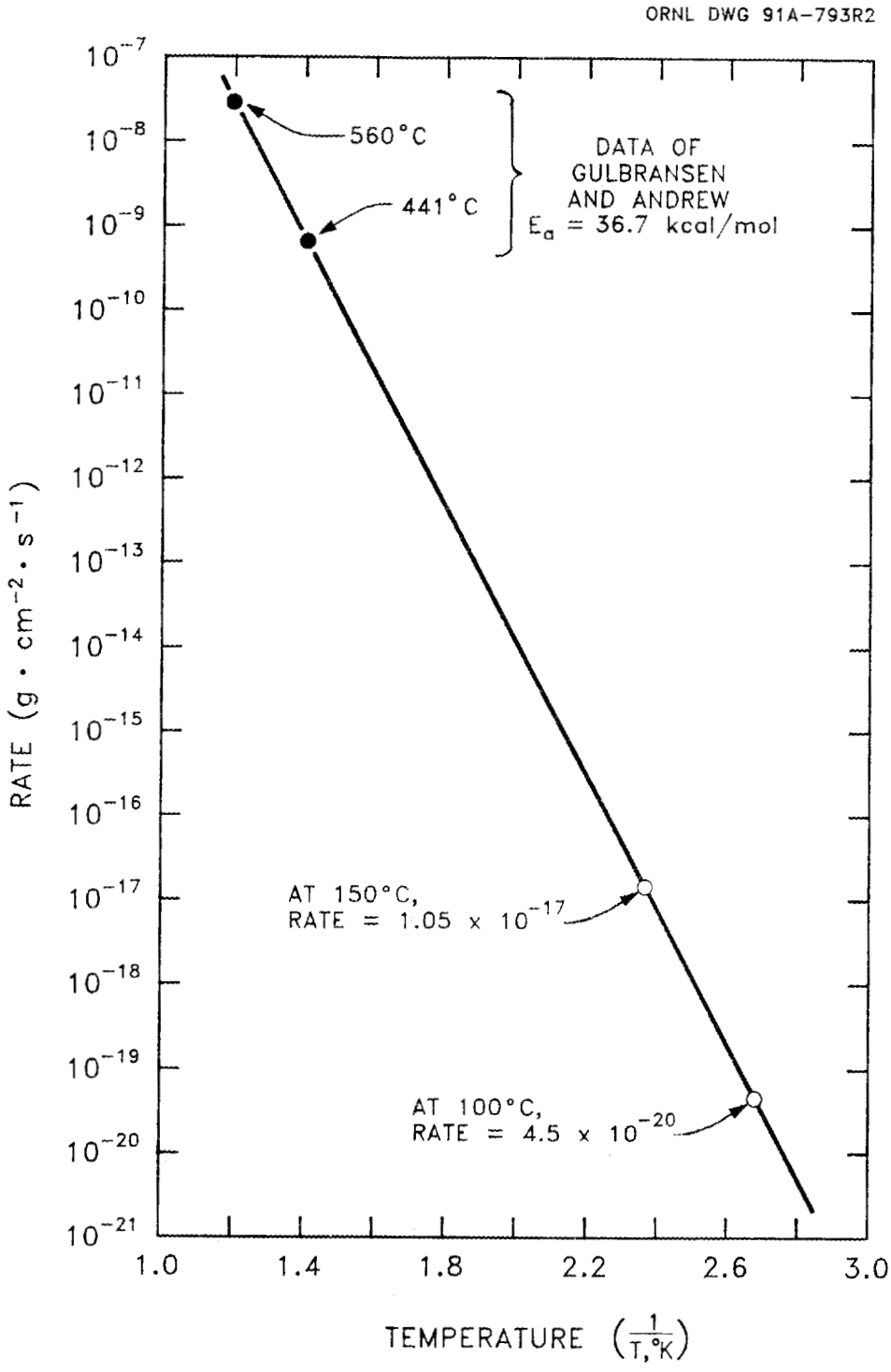

Fig. C.1. Oxidation of graphite at an oxygen pressure of 0.1 atm.

it utilized H-451 graphite in an air atmosphere with a moisture content comparable to the Yucca Mountain site. Their rate data are reported as milligrams of C oxidized per minute, for a 1.77-g sample with a geometric surface area of 5.2 cm^2. At 560°C, Fuller's rate is about seven times faster than Gulbransen's based on the geometrical surface area. However, Gulbransen used single-crystal (naturally-occurring) graphite, so Fuller's apparent rate should be higher. Based on BET surface area, Fuller's rate is about 2.5 times slower than Gulbransen's. Considering the known sensitivity of graphite oxidation to the presence of impurities, this could be considered as good agreement. Further analysis is appropriate after Fuller's work is completed. For now, a multiple of 7, applied to the rates calculated earlier, is probably appropriate.

The Eyring data are in terms of absolute reduction rate theory and do not lend themselves to direct comparison with the other data. However, further analysis of these data would be appropriate. Overall, extension of Fuller's work to clearly separate the effects of geometrical and BET surface areas should be interesting. However, the oxidation rate of graphite at ambient repository conditions is so slow that the interest is largely academic.

The low oxidation rates of graphite in air implies that graphite oxidation is not a controlling mechanism for failure of HTGR spent fuel in a repository. A sample calculation demonstrates this implication. In an HTGR fuel assembly, the fission products cannot be released until the graphite is breached and the SiC layer disrupted. The minimum amount of graphite between an air environment and the fuel is ~0.5 cm. This is the distance between a fuel channel in the graphite block and a coolant channel. The time required for air oxidation of the graphite at 150°C (maximum repository temperature) until exposure of the fuel microspheres using idealized conditions is calculated as follows:

$$Time = [Graphite\ Thickness]\,[Density\ of\ Graphite]/[Oxidation\ Rate]$$

$$= [0.5\ cm]\ [2.26\ \frac{g}{cm^3}]/[1 \times 10^{-17}\ \frac{g}{cm^2 \cdot s}]$$

$$= 1.1 \times 10^{17}\ s = 3.6 \times 10^{9}\ years.$$

C.1 REFERENCES

1. E. A. Gulbransen and K. F. Andrew, "Reactions of Artificial Graphite," *Industrial and Engineering Chemistry*, **44**, (No. 5) 1034-38 (1952).

2. G. Blyholder and H. Eyring, "Kinetics of Graphite Oxidation," *J. of Phys. Chem.*, **61**, 682-88 (1957).

3. E. L. Fuller, O. C. Kapp, and A. D. Underwood, *Corrosion of Nuclear Grade Graphite: Air Oxidation of H-451*, ORNL/GCR 91/xxx, Martin Marietta Energy Systems, Inc., Oak Ridge National Laboratory, (To be published).

ORNL/TM-12027
UC-522, 810, 811

INTERNAL DISTRIBUTION

1. J. M. Begovich
2. W. D. Bond
3. A. G. Croff
4-8. C. W. Forsberg
9. E. L. Fuller
10. R. W. Glass
11. F. J. Homan
12. H. Jones
13. M. J. Kania
14. H. T. Kerr
15. K. H. King-Jones
16-20. G. E. Michaels
21. D. L. Moses
22-26. K. J. Notz
27. P. L. Rittenhouse
28. O. M. Stansfield
29. M. G. Stewart
30. J. D. White
31. K. A. Williams
32-33. Central Research Library
34-35. Laboratory Records
36. Laboratory Records, RC
37. ORNL Y-12 Technical Library, Document Reference Section
38. ORNL Patent Section

EXTERNAL DISTRIBUTION

39. K. R. Absher, U.S. DOE, NP-32, 1000 Independence Avenue, SW, Washington, D.C. 20585

40. C. Anderson, DOE, Savannah River Field Office, 703H, Room 117, Aiken, SC 29802

41. J. H. Ballowe, U.S. DOE, NP64, 1000 Independence Avenue, SW, Washington, D.C. 20585

42. G. C. Bramblett, MHTGR Project Division, General Atomics, P.O. Box 85608, San Diego, CA 92138

43. T. Britell, U.S. DOE, EM-341/BDM, 1000 Independence Avenue, SW, Washington, D.C 20585

44. S. J. Brown, U.S. DOE, NP-63, 1000 Independence Avenue, SW, Washington, D.C. 20585

45. J. M. Broughton, U.S. DOE, NP-2, 1000 Independence Avenue, SW, Washington, D.C. 20585

46. H. C. Burkholder, PNL, P.O. Box 999, Richland, WA 99342

47. B. Butcher, Sandia National Laboratories, Division 5245, Albuquerque, NM 87185-5800

48. P. Castle, U. S. DOE, EM-351/WINCO, 1000 Independence Avenue, SW, Washington, D.C. 20585

49. H. Chamberlain, U.S. DOE, DP-27/WINCO, 1000 Independence Avenue, SW, Washington, D.C. 20585

50. H. W. Chi, EG&G Idaho, 1580 Sawtelle St., M/S 2511, Idaho Falls, ID 83415

51. N. Chipman, WINCO-INEL, P.O. Box 4000, Mail Stop 5213, Idaho Falls, ID 83403

52. E. C. DeLeon, U.S. DOE, NP-63, 1000 Independence Avenue, SW, Washington, D.C. 20585

53. P. J. Dirkmaat, U.S. DOE, NP-80, 1580 Sawtelle St., M/S 2519, Idaho Falls, ID 83415

54. G. A. Dinnean, EG&G Idaho, 1580 Sawtelle St., M/S 2511, Idaho Falls, ID 83415

55. R. W. Englehare, U.S. DOE, NP-50, 1000 Independence Avenue, SW, Washington, D.C. 20585

56. B. Fortune, U. S. DOE, EM-231, 1000 Independence Avenue, SW, Washington, D.C. 20585

57. R. M. Forssell, CEGA Corporation, P.O. Box 85608, San Diego, CA 92138

58. J. E. Fox, U.S. DOE, NE-15, E-478, 19901 Germantown Road, Germantown, MD 20545

59. G. Frandsen, WINCO-INEL, P.O. Box 4000, Idaho Falls, ID 83403

60. S. M. Franks, Office of Gas-Cooled Reactors, Department of Energy, NP-61, Room 1H050, 1000 Independence Avenue, SW, Washington, DC 20585

61. M. L. Gates, U.S. DOE, NP-64, 1000 Independence Avenue, SW, Washington, D.C. 20585

62. J. Gerstein, U.S. DOE, EM-35, 1000 Independence Avenue, SW, Washington, D.C. 20585

63. M. W. Golay, Dept. of Nuclear Engineering, Massachusetts Institute of Technology, 77 Massachusetts Avenue, Cambridge, MA 02139

64. F. Goldner, US DOE, NE-45, 19901 Germantown Road, Germantown, MD 20874

65. H. Gotschall, Gas-Cooled Reactor Associates, 10240 Sorrento Valley Road, Suite 300, San Diego, CA 92121-1605

66. M. Guinan, U.S. DOE, ER-13, 1000 Independence Avenue, SW, Washington, D.C. 20585

67. F. Harrington, 8125 Chesterfield Drive, Knoxville, TN 37909

68. R. Hastings, U. S. DOE, Post Office Box 550, Mail Stop A-655, Richland, WA 99352

69. M. Heigh, U.S. DOE, EM-341/323/BDM, 1000 Independence Avenue, SW, Washington, D.C 20585

70. D. F. Hoel, U.S. DOE, NP-53, 1000 Independence Avenue, SW, Washington, D.C 20585

71. J. J. Jicha, Jr., U.S. DOE, NP-40, 1000 Independence Avenue, SW, Washington, D.C 20585

72. P. Karcz, U.S. DOE, NE-40, 1000 Independence Avenue, SW, Washington, D.C. 20585

73. M. C. Kirkland, U.S. DOE, NP-70, 35 Varden Drive, Aiken, SC 29802

74. K. A. Klein, U.S. DOE, NP-30, 1000 Independence Avenue, SW, Washington, D.C. 20585

75. D. Knecht, Idaho Chemical Processing Plant, WINCO, P.O. Box 4000, MF 5213, Idaho Falls, ID 83403

76. R. Kuhl, U.S. DOE, EM-54, 1000 Independence Avenue, SW, Washington, D.C. 20585

77. R. K. Lane, CEGA Corporation, P.O. Box 85608, San Diego, CA 92138

78. D. Lanning, Dept. of Nuclear Engineering, Massachusetts Institute of Technology, 77 Massachusetts Avenue, Cambridge, MA 02139

79. L. Lidsky, Dept. of Nuclear Engineering, Massachusetts Institute of Technology, 77 Massachusetts Avenue, Cambridge, MA 02139

80. A. L. Lotts, 849 Chateaugay Road, Knoxville, TN 37919

81. L. D. Mears, Gas-Cooled Reactor Associates, 10240 Sorrento Valley Road, Suite 300, San Diego, CA 92121-1605

82. R. R. Mills, MHTGR Plant Design Control Office - East, 3206 Tower Oaks Blvd, Suite 300, Rockville, MD 20852

83. R. A. Moore, U.S. DOE, NP-63, 1000 Independence Avenue, SW, Washington, D.C. 20585

84. R. Natoli, U.S. DOE, EH-222, 1000 Independence Avenue, SW, Washington, D.C. 20585

85. J. Neave, U.S. DOE, EM-323, 1000 Independence Avenue, SW, Washington, D.C. 20585

86. G. E. Nelson, U.S. DOE, 785 DOE Place, MS-1139, Idaho Falls, ID 83401

87. A. J. Neylan, CEGA Corporation, P.O. Box 85608, San Diego, CA 92138-5608

88. H. Nigam, U.S. DOE, EH-25, 1000 Independence Avenue, SW, Washington, D.C. 20585

89. J. D. Nulton, Director, Office of Gas-Cooled Reactors, Department of Energy, NP-60, Room 1H087, 1000 Independence Avenue, SW, Washington, DC 20585

90. A. Olson, WINCO-INEL, P.O. Box 4000, MS 3412, Idaho Falls, ID 83403

91. B. Owca, Idaho Field Office, 785 DOE Place, MS-1235, Idaho Falls, ID 83402

92. L. Papouchado, Westinghouse Savannah River Co., Savannah River Lab., P.O. Box 616, Aiken, SC 29208

93. P. J. Ritzcoven, U.S. DOE, NP-52, 1000 Independence Avenue, SW, Washington, D.C. 20585

94. C. G. Robertson, U.S. DOE, NP-62, 1000 Independence Avenue, SW, Washington, DC 20585

94. G.W. Roles, U.S. DOE, EH-232, 1000 Independence Avenue, SW, Washington, D.C. 20585

95. S. Rosen, U.S. DOE, 19901 Germantown Road, Germantown, MD 20874

96. J. Schmidt, Westinghouse Hanford, P.O. Box 1970, Mail Stop X0-41, Richland, WA 99352

97. D. Shelor, U.S. DOE, RW-3, 1000 Independence Avenue, SW, Washington, D.C. 20585

98. G. Sjoblom, U.S. DOE, EM-1, 1000 Independence Avenue, SW, Washington, D.C. 20585

99. B. A. Smith, U.S. DOE, DP-635, 1000 Independence Avenue, SW, Washington, D.C. 20585

100. F. H. Southworth, EG&G Idaho, 1580 Sawtelle St., M/S 2511, Idaho Falls, ID 83415

102. R. Steele, U.S. DOE, NE-60 [NR], 1000 Independence Avenue, SW, Washington, D.C. 20585

103. O. W. Taylor, U.S. DOE, NP-64, 1000 Independence Avenue, SW, Washington, D.C. 20585

104. G. Tingey, Pacific Northwest Laboratory, P.O. Box 999, Mail Stop PA-10, Richland, WA 99352

105. E. G. Tourigney, U.S. DOE, NP-60, 1000 Independence Avenue, SW, Washington, D.C. 20585

106. O. Truskett, U.S. DOE, EM-343 [309 Trevion II], 1000 Independence Avenue, SW, Washington, D.C. 20585

107. R. F. Turner, General Atomics, P.O. Box 85608, San Diego, CA 92186-9784

108. R. M. Waage, EG&G Idaho, 1580 Sawtelle St., M/S 2511, Idaho Falls, ID 83415

109. H. F. Walter, U.S. DOE, EM-351 [368 Trevion II], 1000 Independence Avenue, SW, Washington, D.C. 20585

110. C. Webber, U.S. DOE, 19901 Germantown Road, Germantown, MD 20874

111. P. M. Williams, Division of HTGRs, U.S. DOE, Office of Advanced Reactor Programs, 19901 Germantown Road, Germantown, MD 20874

112. R. Williams, Electric Power Research Institute, 3412 Hillview Avenue, Palo Alto, CA 94303

113. S. Wolf, U.S. DOE, EM-354 [413 Trevion II], 1000 Independence Avenue, SW, Washington, D.C. 20585

114. R. G. Wymer, 188-A Outer Drive, Oak Ridge, TN 37831

115. H. J. Zeile, Manager, New Production Reactor Department, EG&G Idaho, Inc., P.O. Box 1625, Idaho Falls, ID 83415

116. Caulton L. Irwin, Energy and Water Research Center, West Virginia University, Morgantown, WV 26506-6064

117. Alvin Weinberg, 111 Moylan Lane, Oak Ridge, TN 37830

118. Office of Assistant Manager, Energy Research and Development, DOE-OR, P.O. Box 2001, Oak Ridge, TN 37831

119-346. Given distribution as shown in TIC-4500 in Category UCN-522, -810, -811.