MARTIN MARIETTA ENERGY SYSTEMS LIBRARIES

3 4456 0351517 7

ORNL/TM-11800

ornl

OAK RIDGE NATIONAL LABORATORY

MARTIN MARIETTA

Treatment Options and Flowsheets for ORNL Low-Level Liquid Waste Supernate

D. O. Campbell
D. D. Lee

OAK RIDGE NATIONAL LABORATORY
CENTRAL RESEARCH LIBRARY
CIRCULATION SECTION
4500N ROOM 175
LIBRARY LOAN COPY
DO NOT TRANSFER TO ANOTHER PERSON
If you wish someone else to see this report, send in name with report and the library will arrange a loan.
UCN-7969 (3 9-77)

MANAGED BY
MARTIN MARIETTA ENERGY SYSTEMS, INC.
FOR THE UNITED STATES
DEPARTMENT OF ENERGY

This report has been reproduced directly from the best available copy.

Available to DOE and DOE contractors from the Office of Scientific and Technical Information, P.O. Box 62, Oak Ridge, TN 37831; prices available from (615) 576-8401, FTS 626-8401.

Available to the public from the National Technical Information Service, U.S. Department of Commerce, 5285 Port Royal Rd., Springfield, VA 22161.

This report was prepared as an account of work sponsored by an agency of the United States Government. Neither the United States Government nor any agency thereof, nor any of their employees, makes any warranty, express or implied, or assumes any legal liability or responsibility for the accuracy, completeness, or usefulness of any information, apparatus, product, or process disclosed, or represents that its use would not infringe privately owned rights. Reference herein to any specific commercial product, process, or service by trade name, trademark, manufacturer, or otherwise, does not necessarily constitute or imply its endorsement, recommendation, or favoring by the United States Government or any agency thereof. The views and opinions of authors expressed herein do not necessarily state or reflect those of the United States Government or any agency thereof.

ORNL/TM-11800

Chemical Technology Division

TREATMENT OPTIONS AND FLOWSHEETS FOR ORNL LOW-LEVEL LIQUID WASTE SUPERNATE

D. O. Campbell
D. D. Lee

Date of Issue — December 1991

Prepared by the
OAK RIDGE NATIONAL LABORATORY
Oak Ridge, Tennessee 37831
managed by
MARTIN MARIETTA ENERGY SYSTEMS, INC.
for the
U.S. DEPARTMENT OF ENERGY
under contract DE-AC05-85OR21400

MARTIN MARIETTA ENERGY SYSTEMS LIBRARIES

3 4456 0351517 7

CONTENTS

LIST OF TABLES v

LIST OF FIGURES v

ACRONYMS AND INITIALISMS vii

ABSTRACT ix

1. INTRODUCTION 1

2. THE SCOPE OF THE PROBLEM 2

3. CHARACTERISTICS OF PROMISING TREATMENT PROCESSES 7
   3.1 CESIUM DECONTAMINATION 7
      3.1.1 Zeolites 8
      3.1.2 Organic Ion-Exchange Resins 8
      3.1.3 Tetraphenyl Borate (TPB) 9
      3.1.4 Transition Metal Compounds with Hexacyanoferrate(II) (Ferrocyanides) 9
   3.2 STRONTIUM DECONTAMINATION 10
      3.2.1 Organic Ion-Exchange Resins 11
      3.2.2 Inorganic Ion-Exchange Sorbents 11

4. PERFORMANCE OF SELECTED TREATMENT PROCESSES 12
   4.1 PARAMETERS FOR MEASURING PERFORMANCE 12
   4.2 INORGANIC SORBENTS 14
      4.2.1 Ferrocyanides 14
      4.2.2 Sodium Titanate (NaT) 17
   4.3 ORGANIC ION EXCHANGE 18
      4.3.1 The SRS Resin 18
      4.3.2 Chelating Resins 19

5. PROCESS OPERATIONS AND FLOWSHEETS. 20
   5.1 BATCH SEPARATION FLOWSHEETS. 23
   5.2 ION-EXCHANGE COLUMN FLOWSHEETS. 32

6. REFERENCES 35

7. APPENDIX 37

LIST OF TABLES

Table — Page

1. Maximum, minimum, and average radiochemical concentrations in the LLLW tanks3
2. Maximum, minimum, and average chemical concentrations in the LLLW tanks . . 4
3. Required activity reduction factor to meet various standards 6

A-1. Calculated cesium removal in 1000-L one-stage mixer with successive 500 L feed batches 38

A-2. Calculated cesium removal in 1000-L second-stage mixer with successive 500-L feed batches from first-stage separation of Table A-1 39

A-3. Calculated cesium removal following sorbent replacement in 1000-L one-stage mixer with successive 500-L feed batches 40

LIST OF FIGURES

Figure — Page

1. One-stage IX-UF process for LLLW 24
2. Two-stage IX-UF process for LLLW 26
3. Supernate batch processing flowsheet (Alternate A) 27
4. Supernate batch processing flowsheet (Alternate B) 28
5. Near-term supernate treatment reference flowsheet 30
6. Supernate treatment with batch sorption and ion-exchange columns 31
7. Clarification-ion-exchange column flowsheet 34

ACRONYMS AND INITIALISMS

AMFC	Nonstoichiometric compound of formula $A_nM_{(2-n/2)}Fe(CN)_6$ where A is an alkali metal; M is a metal such as Ni, Co Cu, or Zn; and FC is ferrocyanide (i.e., NaNiFC for sodium nickel ferrocyanide
ARF	Activity reduction factor
CFR	Code of Federal Regulations
DF	Decontamination factor (C_0/C)
DOE	U. S. Department of Energy
FC	Transition metal hexacyanoferrate(II) compounds (ferrocyanide)
IX	Ion-exchange processes
K_d	Distribution coefficient
LLLW	Low-level (radioactive) liquid waste
LLWDDD	Low-Level Waste Disposal, Development, and Demonstration Program
MVSTs	Melton Valley storage tanks
NaT	Sodium titanate
NRC	Nuclear Regulatory Commission
ORNL	Oak Ridge National Laboratory
SRS	Savannah River Site, DOE
TPB	Tetraphenyl borate
TOC	Total organic carbon
TRU	Transuranic
UK	United Kingdom

ABSTRACT

The properties of several chemical separations processes for removing cesium and strontium from high-salt low-level liquid waste (LLLW) supernate solutions are described. Both batch separations using highly selective inorganic ion-exchange materials and column processes using less-selective organic ion-exchange resins are feasible. These processes can be combined in different ways to give a variety of flowsheets for decontaminating the LLLW, and several possible flowsheets are described. The decontamination requirements depend on the LLLW composition and the specifications for the final waste forms after processing. Since several different waste forms might be acceptable, a wide range of requirements must be considered.

Moderate decontamination factors (DFs), in the range of 100 per separation stage for cesium and somewhat less for strontium, can be achieved by simple batch separations using a reasonable amount of sorbent. Larger DFs can be achieved with flowsheets using two or three stages in series, but at the expense of operational complexity. Simpler operation results if enough sorbent is applied to treat several batches of LLLW and the multiple batches are processed with that same sorbent before it is replaced. Moreover, it is not necessary to quantitatively remove the loaded sorbent from the treatment vessel when it is replaced with new sorbent. High DFs require unusually complete removal of the solid sorbent from the decontaminated solution, so solution clarification is a parallel problem.

Maximum DFs can be achieved with organic ion-exchange resins used in columns; but the resins are less selective, so more solid waste (spent resin) is generated. Combination flowsheets using both methods— a simple, one-stage batch process for the initial decontamination followed by polishing with a column— may be advantageous if large DFs are required because the high radiation levels occur in the batch process, which is relatively simple, and the more complex column operations will be concerned only with low radiation levels.

Flowsheets can be devised that appear capable of achieving very high decontamination of the bulk waste solutions with respect to ^{137}Cs and ^{90}Sr, with DFs up to the order of 10^6 or more. The volume of new solid waste concentrate generated (sorbents and resins) varies considerably, depending on the separation process used and the flowsheet, but may be in the range of <0.1% of the LLLW volume for inorganic sorbents to perhaps 1% for organic resins.

TREATMENT OPTIONS AND FLOWSHEETS FOR ORNL LOW LEVEL LIQUID WASTE SUPERNATE

D. O. Campbell and D. D. Lee

1. INTRODUCTION

Low-level liquid waste (LLLW) is currently contained in ten 50,000-gal storage and process tanks at Oak Ridge National Laboratory (ORNL) and as residual heels in a number of older tanks that are no longer in active use. Plans are being formulated to treat these wastes, along with similar LLLW that will be generated in the future, to yield decontaminated effluents that can be disposed of and stable solid waste forms that can be permanently stored. The primary purpose of this report is to summarize the performance of the most promising separations processes that are appropriate for treatment of the LLLW supernate solution to remove the two dominant radionuclides, ^{137}Cs and ^{90}Sr; to indicate how they can be integrated into an effective flowsheet; and to estimate the expected performance of such flowsheets in comparison to waste treatment requirements.

In general, an LLLW treatment process yields at least two products, a small concentrate containing nearly all the radioactivity and the decontaminated bulk material. A major cost factor, in addition to that for processing, is determined by the requirements for management, storage, and disposal of these products. Depending on disposal criteria, several combinations of product compositions might be acceptable; and several combinations of process steps and different modes of process operation can yield a specified product. Therefore, a number of different flowsheets might be practical, and a choice among them will be based on many factors. Technical considerations must be traded off against a variety of other, more or less arbitrary, constraints.

This study depends heavily on several reports published recently that also reference earlier work. The most important of these are the analytical data for the contents of the eight Melton Valley storage tanks (MVSTs) and the two tanks associated with the LLLW evaporator,[1] the comparison of the LLLW tank compositions to a variety of waste criteria or disposal and storage of liquid and solid wastes,[2] and the results of process development studies carried out with simulated and actual MVST wastes.[2,3]

2. THE SCOPE OF THE PROBLEM

Recent characterization studies have provided a data base for the contents of the eight MVSTs and two tanks associated with the LLLW evaporator,[1] including estimates for both the sludge and supernate in each tank. The estimated combined volume for all ten tanks is 977 m^3 (258,000 gal) of supernate plus 413 m^3 (109,000 gal) of sludge. In addition to the measured supernate volume, the sludge contains in the vicinity of 342 m^3 (90,000 gal) of interstitial solution (more or less similar to supernate), which might be processed in combination with the insolubles, or might be separated by washing from the true insolubles and then processed with the supernate. These data provide an estimate of the total amount of the species in each tank.[2]

From these volume estimates and the length of time allowed for processing, the average throughput rate can be estimated. For example, if 977 m^3 (258,000 gal) of supernate is to be processed in 10 years, with 200 operating days per year, the average processing rate would be 490 L/d (129 gal/d). This is more in the bench scale to pilot-plant scale than the plant scale. However, it is anticipated that, over the time frame before the processing is complete, the total volume to be processed will be substantially increased (perhaps doubled) because of addition of LLLW currently existing in other (inactive) tanks and newly generated waste. Even considering such future additions, the required processing rate is relatively small. A scale in the vicinity of 1 L/min (1440 L/d) appears appropriate.

The different tanks contain waste of substantially different compositions, and it is unlikely that they will be mixed into a reasonably uniform and average feed. There will certainly be additions to different tanks, probably containing higher concentrations of radioactivity in some cases; and there will be transfers between tanks. Thus, the certainty is that compositions will be different than they are now, and they will vary with time during processing, depending on the exact source of the waste being processed. The current ranges of concentrations of important species show a variation of a factor of 10 or more for all important species except sodium, nitrate, and chloride (Tables 1 and 2).[2] A head-end operation to bring the process feed to a specified composition range (i.e., pH) will almost certainly be necessary.

The other essential data needed for identifying process requirements are the composition specifications for the products from the waste treatment process. Unfortunately, these have not yet been defined completely. However, the specifications or acceptance criteria for various solid waste forms (such as NRC Classes A, B, and C and

Table 1. Maximum, minimum, and average radiochemical concentrations in the LLLW tanks

Isotope	Supernate (nCi/L) Max.	Min.	Avg.	Sludge (nCi/L) Max.	Min.	Avg.
Analyses of MVSTs						
H-3	1.67E+04	3.21E+04	7.16E+03	N.D.[a]		
C-14	2.12E+04	2.70E+01	6.18E+03	2.87E+04	3.06E+03	7.85E+03
Co-60	3.29E+05	8.34E+03	1.03E+05	9.12E+06	2.76E+05	1.38E+06
Sr-90	4.73E+06	1.11E+04	1.48E+06	8.44E+07	1.55E+07	3.67E+07
Nb-95	7.56E+03	8.10E+02	2.90E+03	2.53E+05	1.91E+04	3.44E+04
Zr-95	1.92E+05	1.40E+03	1.66E+04	5.41E+06	5.78E+04	8.69E+05
Ru-106	1.02E+05	2.97E+04	5.18E+04	2.24E+06	1.94E+05	3.67E+05
Cs-134	3.54E+05	3.62E+04	1.49E+05	2.64E+05	2.11E+04	4.97E+04
Cs-137	5.59E+07	5.08E+06	1.38E+07	2.84E+07	6.52E+05	9.51E+06
Ce-144	6.21E+04	2.00E+04	3.51E+04	1.06E+06	1.33E+05	2.07E+05
Eu-152	8.94E+05	2.51E+03	6.67E+04	4.91E+07	5.78E+05	5.75E+06
Eu-154	4.48E+05	1.62E+03	3.34E+04	1.86E+07	1.99E+05	3.33E+06
Eu-155	1.41E+05	1.08E+04	2.59E+04	5.03E+06	2.72E+04	8.97E+05
Gross alpha	5.78E+04	2.70E+01	7.12E+03	8.15E+06	5.16E+05	1.56E+06
Gross beta	5.94E+07	5.24E+06	1.75E+07	2.41E+08	4.90E+07	9.83E+07
U-232	1.84E+03	1.08E+02	2.28E+02	5.87E+04	4.97E+04	6.36E+03
U-233	2.48E+04	1.62E+02	3.55E+03	4.27E+05	1.63E+04	6.29E+04
U-235	N.D.			1.06E+06	1.26E+05	2.08E+05
U-238	2.70E+02	2.70E+02	2.70E+02	N.D		
Pu-239/Pu-240	1.67E+03	1.62E+02	1.38E+02	9.41E+05	2.99E+04	8.61E+04
Pu-238/Am-241	7.05E+03	4.05E+02	5.01E+02	1.94E+06	8.27E+04	2.41E+05
Cm-243	N.D.			9.45E+05	1.22E+05	2.05E+05
Cm-244	3.11E+04	1.08E+02	1.92E+03	6.04E+06	1.36E+05	1.05E+06

[a]N.D. = not determined in all tanks.

Table 2. Maximum, minimum, and average chemical concentrations in the LLLW tanks

	Supernate			Sludge		
	Max.	Min.	Avg.	Max.	Min.	Avg.
pH	13.1	0.56	10.75			
Density	1.29	1.20	1.23	1.54	1.26	1.35
Dissolved solids, mg/mL	485	348	386			
Total solids, mg/mL	478	334	386	544	369	470
Total carbon, μg/mL	9,500	364	1,340	22,200	1,820	10,900
Inorganic carbon, μg/mL	8,340	1	779	18,100	1,410	7,620
Organic carbon, μg/mL	1,285	167	565	6,480	410	3,330
Elemental analysis	Max. (mol/L)	Min. (mol/L)	Avg. (mol/L)	Max. (mol/L)	Min. (mol/L)	Avg. (mol/L)
Hydroxide	0.29	0.01	0.082	0.29	0.01	0.082
Carbonate				2.02	0.15	0.85
Chloride	0.14	0.06	0.085	0.14	0.06	0.085
Fluoride	0.053	0.026	0.031	0.053	0.026	0.031
Nitrate	5.97	3.23	4.38	5.97	3.23	4.38
Phosphate	0.053	0.053	0.053	0.053	0.053	0.053
Sulfate	0.081	0.052	0.055	0.081	0.052	0.055
Aluminum	1.70E-03	4.45E-05	4.58E-04	4.28E-01	4.58E-02	1.57E-01
Arsenic	5.07E-05	4.00E-05	4.86E-05	1.34E-03	5.37E-04	7.72E-04
Barium	1.82E-04	1.38E-06	3.21E-05	9.76E-04	1.56E-04	5.26E-04
Boron	9.25E-04	1.85E-05	1.72E-04	3.10E-03	1.40E-04	8.73E-04
Cadmium	4.00E-05	1.07E-06	8.48E-06	5.75E-04	1.91E-05	2.15E-04
Calcium	5.74E-01	1.10E-04	8.44E-02	2.00E+00	4.40E-01	2.50E+00
Chromium	5.19E-04	7.31E-06	9.37E-05	5.04E-03	6.54E-04	2.42E-03
Cobalt	9.67E-06	N.D.[a]	5.80E-06	N.D.		
Iron	4.30E-03	1.25E-05	4.68E-04	6.34E-02	9.48E-03	3.30E-02
Lead	3.43E-05	1.01E-05	1.59E-05	3.49E-03	7.30E-04	1.58E-03
Magnesium	2.30E-01	5.35E-05	2.97E-02	9.19E-01	4.51E-02	4.62E-01
Mercury	4.60E-06	2.30E-07	8.48E-07	4.92E-04	6.92E-05	2.02E-04
Nickel	2.55E-04	6.47E-06	5.10E-05	2.51E-03	3.65E-04	1.15E-03
Potassium	1.99	0.22	0.615	0.62	0.20	0.36
Selenium	5.95E-05	2.91E-05	5.34E-05	1.07E-03	4.43E-04	7.63E-04
Silicon	8.72E-03	3.56E-05	9.70E-04	3.60E-02	3.60E-03	9.36E-03
Silver	1.11E-05	4.08E-06	7.11E-06	6.49E-04	7.13E-05	2.22E-04
Sodium	4.78	2.65	3.84	4.78	2.92	3.83
Strontium	1.83E-03	4.57E-06	3.24E-04	4.44E-03	4.31E-04	2.16E-03
Thallium	6.85E-06	4.60E-06	6.40E-06	1.28E-04	6.56E-05	9.86E-05
Thorium	4.10E-04	4.31E-06	5.77E-05	8.27E-02	8.04E-03	3.20E-02
Uranium	4.75E-03	4.20E-07	8.05E-04	1.82E-01	7.17E-03	4.39E-02

[a]N.D. = none detected or not analyzed for.

LLWDDD Class 1 and 2 limits) and liquid discharges (such as 10CFR20 App. B and DOE Order 5400.5) provide examples of the final compositions that might be acceptable under different constraints. These limits have been compared to the source term to provide an estimate of the activity reduction factor (ARF) required of the treatment process, if it is to meet various final waste requirements. These ARFs are summarized in Table 3.[2] At this point, one is in a position to evaluate processes for applicability and to consider how they might be integrated into a flowsheet.

The ARFs for discharge of liquid waste to the environment are quite large— in the range of 10^6 to 10^7 for ^{90}Sr and ^{137}Cs, 10^6 for α, and significant for several other radionuclides. There is uncertainty in interpretation of these requirements with regard to dilution that can occur when process streams are combined and treated; these dilution factors can be large. For solid wastes, NRC Class A requires a small DF for strontium and cesium (<100), and Classes A and B both require a small α DF (<10). The LLWDDD criteria for ORNL (presently under development and subject to revision) require large DFs for LLWDDD Class 1 (10^3 to 10^4 for ^{137}Cs, ^{90}Sr, ^{60}Co, and ^{152}Eu), and α DFs of 10^4 to 10^5 for both LLWDDD Classes 1 and 2.

An optimal process will produce at least two wastes, and probably several of different characteristics. There will be a small-volume concentrate, which should be the solid waste form for disposal or storage, and one or more large-volume, decontaminated products containing the bulk of the physical material but very little radioactivity. There are a number of possible combinations of final waste forms that might be acceptable, so the ultimate decision will be based on several factors in addition to technical considerations. The concept underlying this work is that the volume of the waste forms containing the more hazardous constituents should be minimized, and the high-volume, bulk material should be decontaminated to the point that it can be disposed of or managed at significantly lower cost than the initial LLLW.

For example, the total quantities of the two dominant radioactive species (^{137}Cs and ^{90}Sr) in all the tanks combined are associated with <1 kg of cesium and ≈27 kg of strontium.[2] In contrast, there are 50,000 kg of KNO_3, 325,000 kg of $NaNO_3$, and substantial amounts of other stable salts. Clearly, it is not a prudent use of limited radioactive waste disposal sites to fill them with some 400,000 kg of stable salts in order to dispose of <30 kg of elements containing radionuclides. However, large amounts of nitrate are present, and some means of nitrate management may be required by

Table 3. Required activity reduction factors to meet various standards

Waste type and criteria	Range	^{3}H	^{14}C	^{60}Co	^{90}Sr	^{106}Ru	^{137}Cs	^{152}Eu	Gross alpha
Liquid Wastes									
DOE 5400.5	Max.	8.3	304	$6.6x10^{4}$	$4.7x10^{6}$	$1.7x10^{4}$	$1.9x10^{7}$		$3.9x10^{6}$
	Min.	1.6	<1	$1.7x10^{3}$	$1.1x10^{4}$	$4.9x10^{3}$	$1.7x10^{6}$		$1.8x10^{3}$
	Avg.	3.6	88	$2.1x10^{4}$	$1.5x10^{6}$	$8.6x10^{3}$	$4.6x10^{6}$		$4.7x10^{5}$
Solid Wastes									
Class L-I	Max.	38.8	$2.0x10^{4}$	<1	$5.4x10^{3}$		$7.7x10^{4}$	86	$1.2x10^{5}$[a]
	Min.	7.5	25	<1	12.6		$7.0x10^{3}$	<1	324[a]
	Avg.	16.6	$5.8x10^{3}$	<1	$1.7x10^{3}$		$1.9x10^{4}$	6.4	$1.4x10^{4}$[a]
Class L-II	Max.	<1	106	<1	2.1		<1	<1	$2.0x10^{5}$[a]
	Min.	<1	<1	<1	<1		<1	<1	92[a]
	Avg.	<1	31	<1	<1		<1	<1	$2.4x10^{4}$[a]
NRC Class A[b]	Max.	<1	<1	<1	118		55.9	<1	1.2
	Min.	<1	<1	<1	<1		5.1	<1	<1
	Avg.	<1	<1	<1	37		13.8	<1	<1
NRC Class B[b]	Max.	<1	<1	<1	<1		1.3	<1	8.9
	Min.	<1	<1	<1	<1		<1	<1	<1
	Avg.	<1	<1	<1	<1		<1	<1	<1
NRC Class C[b]	No DF is required to meet NRC Class C requirements								

[a]Gross alpha is assumed to be ^{239}Pu, the most restricted alpha emitter for Classes L-I and L-II.

[b]NRC limits are not presently applicable to DOE facilities but are presented for comparison.

regulations. The total amount of nitrate, although extremely large compared to the quantity of radioactive elements, corresponds to the normal annual agricultural application to <4000 acres of East Tennessee pasture land.

Laboratory research studies have provided sufficient information to yield a reasonable understanding of the performance of the most important operations required for a flowsheet to treat LLLW supernate.[3,4] Several factors must be balanced in assembling these operations into a flowsheet, such as combining processes into a single step and the proper sequencing of process steps that cannot be combined. The purpose of this report is to define the process steps for removing the two dominant radionuclides, ^{90}Sr and ^{137}Cs, and the way that their performance depends on conditions so that a favorable flowsheet can be derived.

It is recognized that other materials may also have to be removed, depending on the final waste forms selected; these may include radionuclides such as actinides, ^{60}Co, and ^{14}C, as well as stable materials such as nitrates and toxic metals. The performance of different flowsheets can then be estimated and compared to the requirements based on disposal criteria for different waste forms. Depending on the final waste forms selected, required ARFs may range from none for some solid wastes to the order of 10^7 for environmental release.[2] Thus, a wide range of flowsheet capabilities should be examined.

3. CHARACTERISTICS OF PROMISING TREATMENT PROCESSES

Several processes have been reported in the literature for separating cesium and strontium from aqueous salt solutions, and some of them have been used in large-scale processing. The general characteristics of the more useful processes have been referenced in earlier reports[3,4] and are summarized in this section.

3.1 CESIUM DECONTAMINATION

Several processes have been used for removing cesium from a variety of solutions at many different nuclear sites. Those that have been used successfully in operations of substantial scale include certain zeolites (chabazite, mordenite, etc.), phenolic ion-exchange resins (Duolite CS-100), tetraphenyl borate, and several transition metal hexacyanoferrate(II) compounds (ferrocyanide, abbreviated FC hereafter). All of these are subject to specific interferences with the MVST solutions, but the FC is less affected than the others. In general, the cesium removal problem is controlled by competition from other alkali metals, most importantly potassium, which is present in rather high concentration in

some MVSTs. Thus, the method must be selective for cesium in competition with the very high sodium and moderately high potassium concentrations (Table 2).

3.1.1 Zeolites

Zeolites have been used to remove cesium from solutions of low to moderate salt concentrations and on a large scale in the case of fuel storage pool water. Although they are very effective for decontaminating water of low salt concentration (such as fuel storage pool water and groundwater), they are not sufficiently selective for cesium over sodium and potassium for practical application with MVST waste. Zeolites are being used to treat the high-level waste concentrate from the former Nuclear Fuel Services West Valley site (high $NaNO_3$ but low KNO_3), but generally <100 bed volumes can be loaded on a zeolite column. The loaded zeolites will be converted to glass. Since the waste volume is moderately small, the volume of vitrified waste can be tolerated.

In the MVST waste, the $NaNO_3$ concentration is ≈4.5 M, and the KNO_3 concentration varies from ≈0.25 M in some tanks to >1 M in two tanks. Under these conditions, the amount of zeolite required to decontaminate the solutions is large, probably >2% of the volume of waste treated. Thus, a large volume of solid waste would be generated. Regeneration of zeolites is not practical, so a multiple-cycle process to concentrate the cesium could not be used. Zeolites might have application for a final concentration step, and as the solid waste form, following a first-stage process using an organic ion-exchange resin. However, only limited scouting tests were made with zeolites, and they were not further considered for this problem.

3.1.2 Organic Ion-Exchange Resins

In most cases, organic ion exchangers are relatively nonselective for separating cesium from sodium and potassium; but there are a few exceptions. Certain resins containing aromatic hydroxide groups (such as resins based on phenolic-formaldehyde polymers) are highly selective for cesium over sodium, but much less selective over potassium. A serious shortcoming of these resins is their instability to nitric acid above ≈0.5 M concentration. As result, elution requires large volumes of dilute nitric acid or more favorable volumes of nonoxidizing acids (such as HCl or H_2SO_4), which cause other problems in subsequent processing steps.

Duolite CS-100 is a resin of this type that has been commercially available, but now it is generally made on a special order basis. It was applied to treat ORNL LLLW many years

ago and has also been used to treat LLLW at West Valley. It contains carboxylic exchange groups as well as the phenolic; and the carboxylic groups will remove strontium. Thus, this resin can remove both cesium and strontium. The problem is that, under most conditions, the capacities for the two elements are different; so whichever one breaks through first limits the column capacity. CS-100 resin was selected for further study by measuring both the static distribution coefficient (K_d) and dynamic column breakthrough curves under conditions representing the MVST supernate composition and dilutions thereof over a range of pH.[3,4]

During the course of a waste treatment development program at the Savannah River Site, a new resin was developed that was somewhat related to CS-100 but is superior for cesium removal.[5,6] The composition chosen for production on a demonstration scale is a polymer based on resorcinol rather than phenol, and it does not contain appreciable amounts of carboxylate. Thus, it is selective for cesium, but not very useful for strontium. Approximately 1 L of this resin (hereafter referred to as SRS resin) was provided by R. M. Wallace of Savannah River for our developmental studies. This resin is being used in tests similar to those for CS-100 resin.[3,4]

3.1.3 Tetraphenyl Borate (TPB)

Tetraphenyl borate will be used to remove ^{137}Cs from high-level liquid waste at Savannah River,[7] and a large-scale test was run successfully several years ago. Cesium tetraphenyl borate is insoluble, and cesium removal can be estimated by a solubility product relationship. Unfortunately, potassium and ammonium tetraphenyl borates are also insoluble, so they interfere seriously with cesium removal, such that enough reagent must be used to precipitate the potassium and ammonium ion, as well as the cesium. Since several of the MVSTs contain high potassium concentrations, this approach is not attractive for the ORNL LLLW. An additional problem with TPB is the production of aromatic hydrocarbons (primarily benzene) when it is hydrolyzed or decomposed in subsequent steps. Recovery and disposal of these organic compounds would present a serious problem. This approach was not further investigated for the MVST waste.

3.1.4 Transition Metal Compounds with Hexacyanoferrate(II) (Ferrocyanides)

Ferrocyanides (FCs) have been studied extensively for cesium removal for many years. Although some early work was done at Savannah River,[8] they have been used for removing cesium from various wastes mainly in Europe, notably in France. Active research and development programs also exist in the United Kingdom (UK)[9-11] and Finland[12] as well as in

other countries. A number of these compounds are quite insoluble over a wide pH range and are ion exchangers with an extremely high selectivity for cesium. There is an extensive literature covering a number of different formulations, but, for this application, the nickel and cobalt ferrocyanides appear most promising.

In general, these materials have the chemical formula $A_nM_{(2-n/2)}Fe(CN)_6$, where A is an alkali metal (sodium or potassium); M is a metal such as nickel, cobalt, copper, or zinc; and $n<2$. Although apparently nonstoichiometric, they may be mixtures of compounds with $n = 0$, 1, and 2. Alternatively, they more likely consist of a crystalline framework of the formula $[MFe(CN)_6]^{2+}$, with the valence satisfied by the ions of A, M, or some other cation; these latter cations are exchangeable, with cesium being very strongly held. The actual composition depends on the detailed method of preparation and the composition of the solution in contact with the solid. These materials will be designated with the abbreviation AMFC in the following (i.e., NaNiFC for sodium nickel ferrocyanide) text. Some of these compounds are remarkably selective for cesium, so it is reasonable to achieve large DFs in simple one-stage batch mixing processes without having to use large amounts of sorbent. Batch processes, similar to common water treatment methods, may be much more practical with these waste solutions than multistage column operations. This approach was selected for further study for application to the MVST supernate decontamination.

For the initial work on cesium removal, absorption on FCs was selected for the primary approach, and the SRS organic ion-exchange resin was chosen for the backup method. Both of these have been investigated under a range of reasonable conditions and have given promising results.[3,4] It appears that either one or both in combination could be used for a decontamination flowsheet.

3.2 STRONTIUM DECONTAMINATION

Strontium removal may be limited by competition from either the very high alkali metal concentration in the MVSTs, or from the alkaline earth family, of which strontium is a member. Although several methods are reasonably selective for strontium over sodium, for example, the large excess of sodium (average Na/Sr mole ratio in supernate $\sim 2 \times 10^4$) requires quite high selectivity. A more fundamental problem is presented by calcium and barium because it is generally much more difficult to separate strontium from these elements. Thus, the removal of strontium might require the simultaneous removal of at least most of the calcium, which is present in about 200-fold excess in average supernate. The actual calcium concentration of the supernate varies greatly among the different tanks,

and most of it is present in a few tanks at relatively low pH. The situation is much worse in the sludge because it contains >90% of all the alkaline earths.

Strontium removal presents two problems that must be considered. One is removal from sodium and potassium, or (approximately) the separation of alkaline earths from alkali metals. This can be done with many organic ion-exchange resins, most notably chelating resins, and with several inorganic ion exchangers. The other problem is the separation of strontium from the other alkaline earths, and particularly from calcium. There are laboratory methods under development for this, and a solvent extraction process using a crown ether offers promise;[13] but no process is demonstrated. The required level of technology is much higher than that of waste management operations in general. Only the former separation (from alkali metals) is considered in this study, but sludge processing, to be advantageous, would probably require the separation of strontium from calcium as well.

3.2.1 Organic Ion-Exchange Resins

Organic resins will separate alkaline earths (and other polyvalent elements) from sodium and potassium, but the efficiency generally decreases as the competing salt concentration increases. The result is that, with the high-salt concentrations of MVST supernate, ion-exchange column breakthrough capacities tend to be fairly small. Since the resorcinol-based SRS resin is relatively ineffective for strontium removal from high-salt solutions, several chelating resins that are more selective for polyvalent metals were tested. These include IRC-718, Ionac SR-5, and Lewatit 207 and 208. They could be used either in a mixed bed with the SRS resin to remove cesium and strontium together, or in separate columns to remove them separately. These resins may also be useful for cobalt removal.

3.2.2 Inorganic Ion-Exchange Sorbents

Inorganic sorbents have been studied extensively, and several give efficient strontium separations from alkali metals even in high concentrations. These include materials such as hydrous zirconium oxide, hydrous titanium oxide, sodium titanate, polyantimonic acid, zirconium phosphate, and others. Several of these are available commercially in limited quantities and at high cost, while many have been used in laboratory studies only. Various forms of hydrous titania are available in larger quantities. Scouting tests were made with several materials that were available through other programs. The most promising was sodium titanate (NaT), which was developed for waste fixation during an extensive program at the Sandia National Laboratory several years ago.[14]

NaT was selected as the primary inorganic ion exchanger for strontium removal, and the organic chelating resins were chosen as the backup. Both of these have been investigated to a limited extent and have given promising results.[3,4] However, further work is required.

4. PERFORMANCE OF SELECTED TREATMENT PROCESSES

Results from the experimental program have been reported[3,4] and included in this section. The following decontamination methods appear most promising and have been studied for this problem.

Inorganic sorbents:

1. Cesium removal with NaNiFC or KCoFC, and
2. Strontium removal with NaT;

Organic ion-exchange resins:

3. Cesium removal with the SRS resin, and
4. Strontium removal with an organic chelating resin.

The inorganic sorbents generally are more selective than organic ion exchangers under reasonable conditions, and it is anticipated that they would give large DFs (10^2 to 10^5) if used in a batch (stirred-tank) mode consisting of one to three stages in series. This would be a relatively simple process rather like the sludge-precipitation processes commonly used in waste treatment. It must be recognized that solids in addition to the added sorbents may also be produced because of precipitation of constituents of the LLLW (i.e., from pH adjustment). The organic ion exchangers would be used in columns since their selectivity usually is not large enough for batch application, and they might be particularly suited for a polishing step to remove residual low levels of activity after the bulk had been removed by a batch process with the inorganic sorbents. Since a rather large column throughput would be advantageous, solids cannot be tolerated in column feed; so the solution would have to be carefully clarified.

4.1 PARAMETERS FOR MEASURING PERFORMANCE

Several parameters commonly used to describe the decontamination effectiveness can be related. All of the sorbents considered in the previous section, with the exception of TPB which follows a solubility product relationship, are ion exchangers; thus, they can be treated to a reasonable approximation in terms of the distribution coefficient, K_d, which is

$$K_d = (C_0 - C)V/mC = 10^6(C_0 - C)/C(\text{ppm}), \quad (1)$$

where C_0 and C are the aqueous concentrations (in any consistent units) before and after treatment, m is the mass of sorbent in g, V is the volume of waste solution in mL, and (ppm) is the amount of sorbent in parts per million, defined here as mg sorbent/L solution. A volumetric counterpart, K_d^v, based on the volume of sorbent rather than the mass, is convenient for describing column performance because it is directly related to the throughput in column bed volumes. This is expressed as

$$K_d^v = (C_0 - C)V/CV_{sorbent} = \rho K_d, \tag{2}$$

where ρ is the tap density of the dry sorbent (g/mL).

The decontamination factor in this report is

$$DF = C_0/C = 1 + 1 \times 10^{-6}(ppm)K_d. \tag{3}$$

Defined this way, the DF includes concentration reduction due to dilution during treatment, due to reagent addition, for example, as well as to ion exchange.

The reduction of activity (including dilution) can be expressed in percent as

$$\% \text{ removed} = 100(C_0 - C)/C_0 = 100(1 - 1/DF) = 100(ppm)K_d/[10^6 + (ppm)K_d]. \tag{4}$$

In the data reported as DF or % removed, the correction for changes in concentration because of the activity removed in successive samples taken at different times from a given experiment has not been made; but this was taken into account in calculating K_d. In effect, this causes the reported DF and % removed to be slightly smaller than the true value in some cases.

For practical purposes, K_d is directly related to the DF in a one-stage process, as shown above. If K_d is large enough, reasonably large DFs (i.e., ~100) might be obtained in one stage using a practical amount of sorbent (i.e., <1000 ppm = 0.1 wt %). If the system continues to obey the same equilibrium, the overall DF is squared if two batch separation stages are used in series, and cubed if three stages are used. Thus, reasonably large DFs can be achieved with a very few batch process stages if K_d is large enough.

In the case of ion-exchange columns, the situation is different. Because a column normally has many separation stages, the column effluent will have a large DF initially, regardless of the value of K_d. However, the volume passed through the column before breakthrough occurs depends on K_d and exchange kinetics. The midpoint of the breakthrough curve (C/C_0=0.5) occurs at a volume approximately equal to K_d^v bed volumes. The slope of the breakthrough curve is related to the ion-exchange kinetics.

These two variables (K_d^v and kinetics) together determine the throughput before intolerable losses would occur and therefore determine the effective column capacity. Depending on kinetics, the useful capacity may vary from somewhat less than K_d^v down to a small fraction of K_d^v, in units of bed volumes. Best results with columns are achieved if K_d^v is fairly large, a few thousand or more, and kinetic factors are favorable. If K_d^v is much larger, it is usually not possible to take advantage of the potentially very large column throughput because physical factors (such as plugging or fouling of the column due to solids) limit the capacity.

Such considerations suggest that one to three batch separation stages should be adequate for cesium and strontium decontamination using FCs and NaT, respectively, which give very large K_ds, 10^5 to 10^6, or even more under favorable conditions. On the other hand, the organic resins give K_d^vs in the range of 10^2 to 10^4, so that ion-exchange column operations are more suitable in general. Very different flowsheets can be made to work, and many factors such as equipment and space requirements, operational mode, and maintenance can be quite different. The selection of the optimum method or combination of methods will depend on the particular situation.

The general performance of these sorbents, with respect to flowsheet considerations, is discussed in this section.

4.2 INORGANIC SORBENTS

4.2.1 Ferrocyanides

The transition metal ferrocyanides are easily prepared as slurries by mixing a solution of $Na_4Fe(CN)_6$ or $K_4Fe(CN)_6$ with a solution of the metal salt (nickel or cobalt nitrate, chloride, or sulfate), and the slurry can be added to the waste solution after pH adjustment.[3,4] They can also be precipitated in the waste solution by adding the reagents separately. The preferred ratio of metal to ferrocyanide is generally in the range of 1.5 to 1.7, and a small fraction of the metal may precipitate as $Ni(OH)_2$ or $Co(OH)_2$, which strongly affects the sedimentation properties. If the mole ratio is <1.5, the slurries become more difficult to clarify. Precipitate particle sizes are very small at best. In some cases, the FC precipitate can be washed and dried to yield a hard product that can be broken into fragments suitable for column use; this is readily done with KCoFC, but not with NaCoFC, KNiFC, or NaNiFC. The latter group can be prepared in granular form only by a long and tedious process.

These sorbents may be used for cesium removal over the pH range from a maximum of about 11 down to moderately acidic solutions. The range 7 to 11 is of interest for this task, but decontamination of acidic solutions could be useful for treatment of specific wastes at the source. Above pH 11, the compounds are increasingly decomposed and lose effectiveness; thus, at higher pH, higher AMFC concentrations are necessary. Experimental data indicate that ≈10 ppm of NaNiFC is required with LLLW at pH 10, and somewhat more at pH 11.[4] This loss of effectiveness at high pH occurs rapidly with powders, but granular KCoFC after proper conditioning is relatively stable for several days up to pH 13. Digestion at high pH (>13) eventually frees the cesium and ferrocyanide ion, leaving a nickel or cobalt hydroxide precipitate; in this way, the cesium could be recovered for further concentration, if desired.

Since the FCs are not stoichiometric, the actual concentration used is subject to some uncertainty. In this study, concentrations (as ppm, defined as mg solid/L solution) are calculated assuming all the metal (Ni or Co) and all the $Fe(CN)_6^{4-}$ form a precipitate, and, in addition, enough of the alkali metal (Na or K) is included to satisfy valency requirements. In practice, these sorbents do have a slight solubility, and a small fraction of the metal may be present as hydroxide rather than the compound, which would decrease the concentration. However, they are known to be hydrates, which would increase their mass. Most work was carried out with a nominal 100 ppm by adding a prepared slurry corresponding to 5.7×10^{-4} M Co or Ni and 3.4×10^{-4} M $Fe(CN)_6^{4-}$, which calculates to be 104 and 108 ppm for the Na and K compounds, respectively.

Under these conditions, the exchange of cesium can be treated by the distribution coefficient concept, although K_d may not be exactly constant if the amount of exchanger is varied very far from 100 ppm. At very low sorbent concentrations, smaller K_ds may be observed, probably because of the small solubility of the exchanger and competition from trace elements in the solution. The values of K_d are unusually large and remarkably insensitive to competition from high concentrations of sodium and potassium salts, typically being 1×10^6 or larger over the range up to 8 M $NaNO_3$ + 1 M KNO_3.[4] Varying the cesium concentration up to 1×10^{-5} M also had no major effect on K_d; the cesium concentration in the MVSTs is estimated to be $<5 \times 10^{-6}$ M. In general, NaNiFC appears to be somewhat superior to KCoFC, especially at extremes of the ranges.

A performance estimate can be carried out on the basis of 100 ppm sorbent with a K_d of 1×10^6. With a one-stage batch separation under these conditions, the calculated DF is 101 and 99.0 % of the Cs is removed. In many measurements, larger K_ds are often

observed, up to 1 x 10^7, and the value is often limited by the extent of clarification. Thus, even with infinite K_d, if 1% of the sorbent is not removed during clarification, C would be $C_0/100$ and the apparent K_d would be 1 x 10^6. In many experiments, it has been possible to obtain apparent K_ds of 1 x 10^6 by simple filtration or centrifugation, and ≈1 x 10^7 by using a second clarification step of filtration or centrifugation. Sedimentation experiments give highly varied results, with a K_d of ≈2 x 10^5 (DF ≈20) being typical after 20 h of settling on a 1-L scale with actual MVST supernate. After longer times, or particularly if the supernate is removed and allowed to settle another day, the K_d is ≈1 x 10^6. Settling characteristics are known to depend on several conditions of the preparation procedure, such as the concentrations of reagents, mole ratios, order of addition, temperature, aging time, and others; and no prediction can be made other than by following a standard recipe. The use of surfactants might significantly improve clarification by sedimentation, but none has been investigated.

The FCs present a problem with respect to final disposition. It is possible to recover the cesium from them by treatment with NaOH; but this is likely to evolve into a fairly complicated recycle scheme. The cesium could then be loaded on a stable solid such as a zeolite and incorporated into a solid waste form (concrete or glass). The FCs are suitable for direct fixation in certain wastes, such as concrete, and this has been investigated in the UK.[15] Cesium leach rates are low, and the waste is stable. As long as water is present, the temperature is necessarily limited and the compounds are sufficiently diluted by the concrete that they are stable. However, a serious potential problem has developed recently at Hanford because very large quantities of FCs and mixtures of nitrate/nitrite salts have been dewatered in large storage tanks.[16] This situation is under intensive investigation currently, and the result will determine how FC wastes can be solidified.

If the FCs are dried and heated, they decompose, giving off toxic cyanogen gas among other compounds; this can be oxidized in air. If FCs are present in high concentration and heated with oxidants (such as $NaNO_3$), a rapid exothermic chemical reaction can occur, leading to pressurization of the vessel and possibly an explosion, depending on conditions. This can be avoided by dilution with inert solids or by ensuring that the temperature is not excessively high, but it will probably be necessary to avoid the existence of mixtures of FC and oxidant (nitrate salts), except when excess water is present to guarantee an adequately low temperature. In any case, it will be required that proper attention be given to the method for disposing of FC wastes.

4.2.2 Sodium Titanate (NaT)

Sodium titanate has been investigated to a lesser extent than the FCs, but the use of one particular material can be defined reasonably well. There are many different forms of NaT and sorbents based on hydrous titania. The material studied is a NaT prepared at the Sandia National Laboratory[14] and formed into a granular product by Cerac Corporation during a development program several years ago; we obtained several hundred grams of the material at that time. There is good evidence that the NaT powder prepared originally by Sandia would be a better material for the batch contacting under consideration here, because it would suspend in the solution more readily and sorb strontium more quickly; in addition, it is expected to have a larger K_d for strontium. R. Dosch, who originally developed the material, has been contacted and supplied a new sample for future testing. Sodium titanate will also be used for strontium removal at the Savannah River Site.

In addition, reagent grade TiO_2 and several preparations microspheres of hydrous titania, NaT, titanium phosphate, and zirconium phosphate made by the internal gelation method have been used in scouting tests.[4] All of these were considerably inferior to the NaT, but it is possible that sol-gel material with better exchange properties could be prepared. The following discussion, however, is based on experiments with the granulated Sandia NaT material.

Strontium removal with NaT shows a large increase with increasing pH, in contrast to Cs removal with FCs, which shows essentially no pH dependence up to pH 11 and then a total loss of effectiveness as the pH increased above 11. At pH 13 or higher, the strontium K_d with NaT approaches 1×10^6. In the pH range <11, suitable for FCs, K_d is in the low-to-mid 1×10^4 range; thus, strontium removal is much less efficient in the pH range suitable for cesium removal than it is at a higher pH. For example, in experiments with simulants with 455 ppm NaT, the strontium DF was 7 at pH 10, 14 at pH 11, 25 at pH 12, and 330 at pH 13.[4] Because the favorable pH range for the two processes (cesium and strontium removal) is different, both can not be utilized at optimum effectiveness with the same solution; this presents a flowsheet problem.

The most effective use of NaT for Sr removal occurs at high pH, ≥13. It may be practical to include such a high-pH step in a flowsheet. Clarification at high pH may be desirable in any case, to minimize actinide (TRU) activity and remove some other metals. Tank sampling has demonstrated that many metals are concentrated in the sludge, with only a small fraction in the supernate. If a high-pH treatment is used, one option would be to combine the NaT process for strontium removal with this step. Another option is to add

NaT to the MVSTs if they are operated at a pH ≥13. This would precipitate nearly all the strontium and maintain it in association with the sludge as long as the pH remained high. However, it is not clear that adequate mixing can be achieved in the MVSTs to ensure an effective process, and the solid would have to be recovered from the tanks eventually.

It would also be possible to use NaT in the cesium removal process with FC, if a large strontium DF is not required. This could be carried out at pH 10.5-11, even though strontium removal would not be very efficient under this condition. Possibly, a higher pH could be used with NaT and a stabilized KCoFC, at about pH 13; but there would be a time constraint on the contact time, and either cesium or strontium would not be permanently held by the sorbents (depending on whether the pH of the waste slurry subsequent to treatment was >11). Also, the stabilized KCoFC would be much more expensive to prepare.

The titanates cannot be effectively eluted, so they logically become the solid waste for disposition. Much work has been done relating to the incorporation of NaT in solid wastes. Strontium titanate has been used as an isotopic heat source material. It is stable, nonreactive, and suitable for incorporation in a variety of solid waste forms.

4.3 ORGANIC ION EXCHANGE

4.3.1 The SRS Resin

The resorcinol-based Savannah River resin is effective for cesium removal over a fairly wide pH range, but the optimum pH is ≈12.5; as pH decreases, it gradually becomes less efficient.[3,4] An important consideration with this resin is that potassium interferes to a significant extent, and the potassium concentration is high in some tanks. The potassium content is probably the largest factor mitigating against use of organic resins, versus FCs. Several tanks are ~0.25 M, but others are >1 M, and the average of all supernate is 0.51 M (and increasing, unfortunately). The capacity of an ion-exchange column, estimated from batch distribution data, is not more than 500 column volumes at 0.5 M K^+. Thus, treatment of all the current supernate would require ≈2000 L of resin on a once-through basis. This can be visualized as 100 runs through columns containing 20 L of resin or about 10 runs with columns the size of 55-gal drums. The effectiveness of this resin for strontium removal is much poorer, with the breakthrough estimated to occur at ≈100 column volumes; thus, a different resin would be used for strontium (see next section).

There are two methods that might be considered. One is to use a few resin columns repeatedly, eluting the activity and regenerating the resin after each loading cycle, which is

the way ion-exchange columns are usually operated. Unfortunately, this resin has been somewhat difficult to elute;[4] so extensive equipment is required and large volumes of recycle streams are generated, adding to the total LLLW quantity. This class of resins is unstable to nitric acid except at low concentrations, so nitric acid elution generates a large volume of product. Hydrochloric acid is effective, but it presents a problem in material selection for the evaporator used to concentrate the product. Formic acid has been investigated, but it required large volumes for reasonably complete elution, also. Currently, there is no easy answer for this problem.

The second method is to use the resin on a once-through basis, with the loaded resin being the solid waste form. Since the organic resin may not be an acceptable waste, it might be necessary to burn or thermally decompose the resin, leaving a granular ash containing the radioactivity and other metals. This has been done on a modest scale for making irradiation targets[17] and enriched uranium microspheres for reactor fuel elements; the particles were mixed with metal powders or carbon and pressed into solid pellets. This approach would require small equipment to treat the resin (<10 kg/d), and would consume much more resin (up to 300 ft^3); but it would avoid the elution and regeneration of the resin columns and eliminate the need for the associated equipment for concentration and recycle. The cost of resin is probably minor compared to costs for equipment and operation.

4.3.2 Chelating Resins

Several chelating resins were tested for strontium removal. These included IRC-718, Ionac SR-5, and Lewatit 207 and 208, all of which were found to be quite effective, as well as the SRS resin and Duolite CS-100, which were less effective. Batch distribution tests do not allow an unambiguous choice because conditions such as the phase ratio (related to throughput of a column), contact time (related to flow rate), and pH all affected the results. However, IRC-718 and the two Lewatit resins showed excellent potential column capacities, in the vicinity of 2000-3000 bed volumes, corresponding to ≈500 L of resin to treat all the current supernate. The final choice will depend on the specific conditions of application.

The chelating resin could be used either mixed with SRS resin for simultaneous removal of both cesium and strontium in the same column or in separate columns in series. The second approach is probably advantageous because conditions such as residence time during loading and the elution procedure could be optimized for each resin. A small-scale

column test, made with a mixed bed of SRS resin and IRC-718 to remove both elements together, indicated a useful column capacity of ≈200 bed volumes. This corresponds to 5000 L of the resin mixture to remove both cesium and strontium (or 100 runs with 50-L columns), which is larger than the sum of the estimates from batch experiments with the individual resins. This is probably because of experimental variations, since small-scale ion-exchange columns often give conservative results.

Strontium can be eluted from the chelating resins with acids much more readily than can cesium be eluted from the SRS resin. Thus, elution does not present as much of a problem. The other option, burning or decomposing the resin for generation of a solid waste, is also possible, as described above.

5. PROCESS OPERATIONS AND FLOWSHEETS

Several operations are possible for removing actinides, cesium, and strontium from the waste, and the flowsheet will consist of a rational combination of these individual steps. The operations considered in this study are the following:

1. Clarification to remove insoluble species, notably actinides, ^{60}Co, and other metals, from the supernate, either at pH ≥~13 or ≤11;
2. Cesium removal by inorganic ion exchange with FC in a batch process, at pH <11;
3. Cesium removal by organic ion exchange with the SRS resin in a column process, at pH 11 to 13 but preferably ~12.5;
4. Strontium removal by inorganic ion exchange with NaT in a batch process, preferably at high pH, >~13;
5. Strontium removal by organic ion exchange with a chelating resin, with pH 10-13.

Different processes have different optimum pH values, so it would be advantageous to operate different steps at two different pHs, such as 10.5-11 and 12.5-13. The lower pH range is necessary for cesium removal with NaNiFC and is satisfactory for strontium removal with chelating resins. The higher pH range is necessary for efficient strontium removal with NaT and for cesium removal with the SRS resin, and it is expected to be advantageous for alpha removal by clarification. There will probably be a problem from solids formation as pH is changed because several metals are at their solubility limit in the supernate solution; some are less soluble as pH is decreased (aluminum), and some are less soluble as pH is increased (calcium, magnesium). Such solids may seriously interfere with an ion-exchange column operation since the pH often changes within the column.

Therefore, it is recommended that batch separations be used in the early stages when radioactivity levels are higher and that columns be used (if necessary) only after activity has been reduced so that hands-on maintenance is practical.

Clarification is probably most advantageous, with respect to alpha and cobalt decontamination, at the highest practical pH; and a very efficient solids removal step is expected to be necessary to ensure adequate removal of alpha activity. However, a fairly high degree of clarification may be necessary between each batch separation stage so that solids carryover is not limiting, but rather ion exchange is. For example, under the conditions for batch separation of cesium discussed before, at least 99% removal is projected; thus, one would require at least 99% solids rejection in the clarification step following that operation. In very limited tests, sedimentation and decantation have not given that degree of solids separation unless settling times were in excess of 1 d. It is possible that settling could be used for the first stage of decontamination, because it is a simple step that is unlikely to require maintenance; but it is expected that better separations will be obtained, overall, with filtration following subsequent batch separation stages.

Several clarification methods are possible, in principle, but filtration appears to be more suitable than centrifugation because of the low average throughput, the long operating time, and maintenance considerations. For this sort of process, in which solid sorbents are not being removed from the process but rather are being retained within a particular stage of a series of stages, cross-flow filtration appears to be well-suited. The nature of the filter element, such as pore size, remains to be determined from hot testing on a larger scale. It is known that both the FCs and titanates exist partly as very small (submicron) crystals, so it is expected that a very small pore size will be necessary, for example, ≤ 0.1 μm. Ultrafiltration has been recommended in studies in the United Kingdom, using filters with a molecular weight cutoff of ≈10,000 to 20,000 (corresponding to ≈0.003-μm pore size). The same cross-flow concept, and even equipment (except for the filter membrane), can be used for both ultra- and conventional filtration.

One can propose a batch-processing flowsheet consisting of three separation stages (mixing tanks), with a filtration step following each:

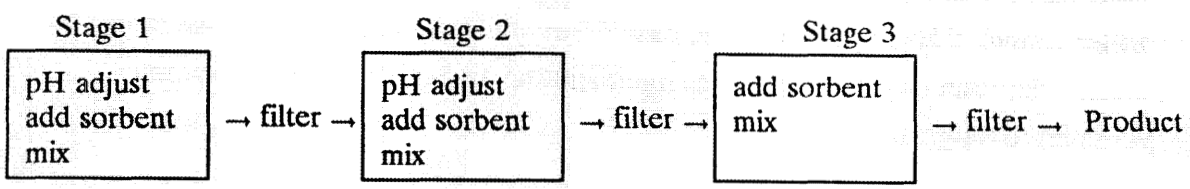

If solids (sludge) are transported to the processing equipment with the supernate, it may be necessary to use the Stage 1 vessel only for feed adjustment and clarification, without the addition of a sorbent; the solids could be returned to the MVSTs or solidified as a TRU waste. The flowsheet could be operated in a simple batch mode or as a continuous or semicontinuous process with a relatively large volume flowing through the successive stages. The sorbents would be either removed and replaced periodically, or moved to the preceding stage instead of being replaced, to maintain the necessary DF. If greater decontamination is required, either additional batch stages or ion-exchange columns could be used, possibly reaching radioactivity levels low enough for environmental discharge. The solid sorbent is the waste concentrate, and the treated solution must be decontaminated adequately for its specified fate (direct solidification, further decontamination, or possibly discharge). These flowsheets are considered in Sect. 5.1.

One can also propose a process using ion-exchange columns rather than batch separation stages:

pH adjust	→	clarify	→	SRS resin columns	→	chelating resin columns	→	Product

Such columns readily give many equivalent separation stages, and their size is determined primarily by residence time requirements. The maximum throughput depends on conditions but should be in the range of a few hundred to a few thousand bed volumes. As noted in Sect. 4.1, this is related to K_d^v and exchange kinetics. The amount of resin required is the volume to be processed divided by the throughput. A representative estimate is 2000 kg of SRS resin for cesium plus 500 kg of chelating resin for strontium (Sect. 4.3). This could be used on a once-through basis. Proportionately less resin could be used in multiple load/elute cycles, but that would lead to a major complication of operations since elution of the SRS resin has not been easily achieved. These flowsheets are considered in Sect. 5.2.

Combinations of the two approaches can also be used. The head-end step for the ion-exchange column process could easily involve a scavenging precipitation to aid the clarification operation, and an inorganic ion exchanger could be included as well. Without adequate pretreatment, it is anticipated that plugging of ion-exchange columns is likely because of precipitation of metal compounds within the columns, resulting in a much smaller column throughput than predicted. This would cause operation to be more difficult, the resin requirement to be larger, and the amount of waste concentrate generated to be greater.

5.1 BATCH SEPARATION FLOWSHEETS

Batch separation processes that are sufficiently selective can be used to effectively accomplish some, and perhaps all, of the goals of this task. In general, the inorganic ion-exchange processes (FCs and NaT) are appropriate for this application. A simple one-stage batch separation is indicated schematically in Fig. 1. This shows a mixing vessel and cross-flow filter to retain the sorbent in the vessel and clarify the product. As a model of such a one-stage batch process, NaNiFC at 104 ppm with $K_d=10^6$ would give a DF of 105, or 99% cesium removal. With respect to cesium, this would be adequate, for example, for solidification of the supernate as an NRC Class A solid waste. The sorbent would constitute 1.04 kg of solids per 10,000 L processed and contain an average of 13.6 Ci of ^{137}Cs.

If a substantially greater DF is required (as for the LLWDDD Class 1 or the liquid wastes), additional batch separation stages can be added in series. Under the same conditions (104 ppm with $K_d=10^6$), two stages would give a DF of $\approx 10^4$ (possibly adequate for LLWDDD Class 1) and three $\approx 10^6$ (nearly enough for liquid waste discharge). For most efficient use of the sorbent (which is advantageous because of its cost and the possible hazard provided by large quantities of FCs in the solid waste), after it is loaded it should be transferred between batch mixers in a direction countercurrent to the solution flow instead of being removed and replaced with new sorbent; of course, the final stage would require new sorbent.

The sorbents can be applied in different ways. If the amount of sorbent is increased, the DF increases roughly in proportion. For example, with $K_d=1 \times 10^6$, 1040 ppm would give a DF of ≈ 1000 in a single contact, and 10,400 ppm (1%) would give a DF of $\approx 10^4$. However, if two successive contacts are used, each with 104 ppm, the DF would be $\sim 10^4$, as noted above. For the cases with DF$\approx 1 \times 10^4$, there would be 104 kg sorbent per 10,000 L of waste treated with a single contact and 2.1 kg sorbent per 10,000 L with two contacts in series. Thus, the use of two or three successive contacts requires much less sorbent for a given DF, thereby substantially reducing the cost of reagents and the amount of solid waste concentrate formed. The disadvantage is the additional equipment required, associated with two or three mixing tanks instead of one.

Because it is somewhat difficult to quantitatively remove the small amount of solid sorbent from the mixing vessel after each batch is processed, a simpler approach is to start with enough sorbent to treat several batches of supernate and then run proportionately more batches of waste solution through that separation stage. For example, if 10 times as

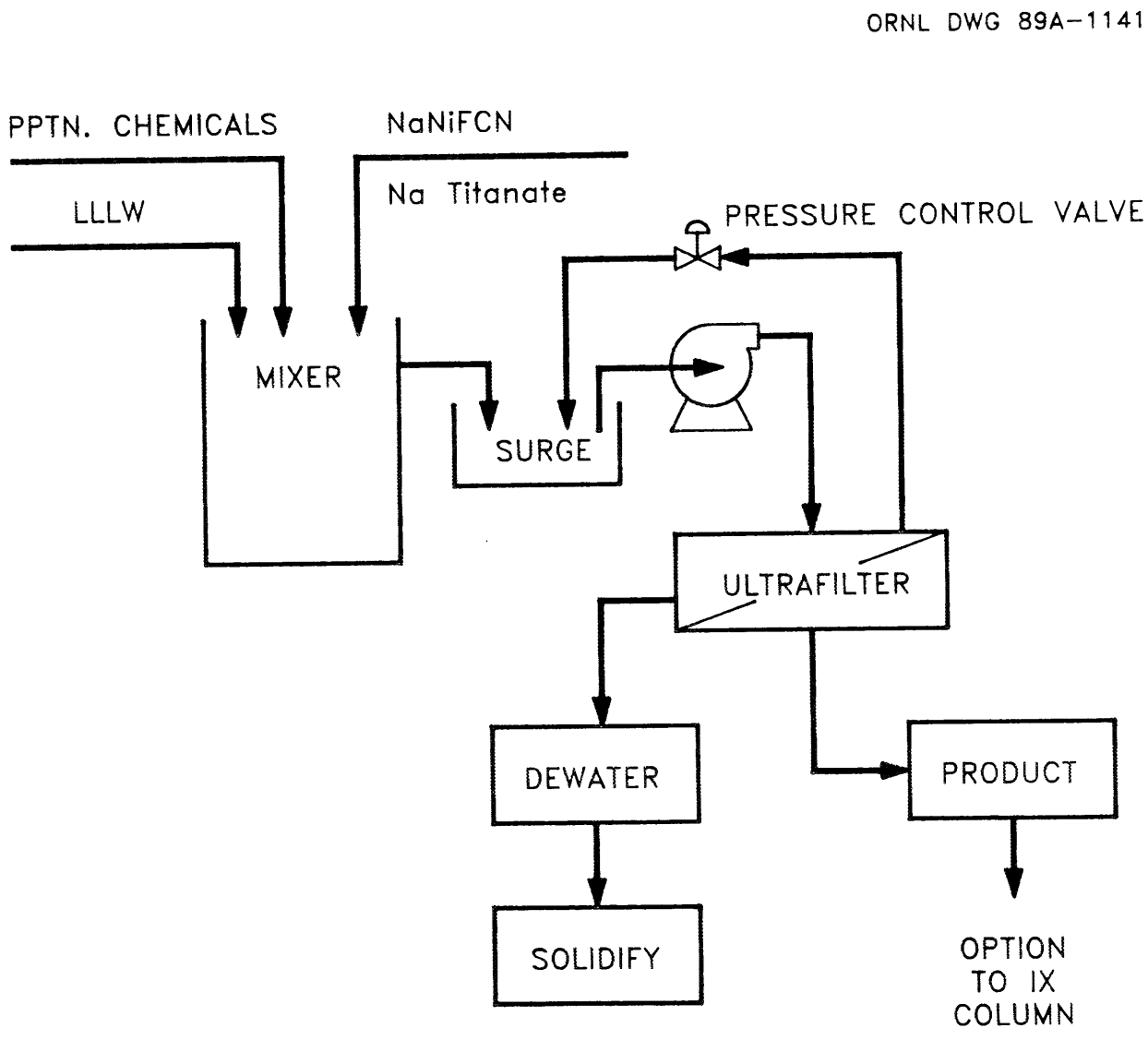

Fig. 1. One-stage IX-UF process for LLLW

much sorbent (1040 ppm, based on the volume of the mixer or contacting vessel, or 1.04 kg in a 1000-L mixer) is used in a single-stage mixer, and successive batches of solution are contacted, removed, and replaced without removing the sorbent, the calculated DFs are shown as a function of volume processed in Table A-1, both for successive batches and averaged for the total accumulated volume processed. In this case, the sorbent might be removed and replaced after 10,000 to 20,000 L are processed. This approach results in a greater average DF for a given volume processed and amount of sorbent used, compared to individual batches each at 104 ppm sorbent.

A modification of this scheme, consisting of a two-stage countercurrent process, is shown in Fig. 2. The first stage operates by sedimentation to avoid system complexity in the highest-activity part of the process, and the second stage uses a high-efficiency filter to produce a well-clarified product. The concentrate from the filter, containing sorbent, is cycled back to the first stage, where the loaded sorbent settles and is removed as sludge. It is expected that such a process, with 100 ppm NaNiFC in each mixing vessel, would give a cesium DF of ≈2000, depending on sedimentation time in the first stage.

More conventional flowsheets, using head-end feed adjustment and clarification followed by two or three batch separation stages, are illustrated in Figs. 3 and 4. The flowsheets differ through the use of a filter between stages in Fig. 4 to ensure maximum effectiveness. In both cases, the first stage is a feed adjustment step that would be tailored to the particular waste process. For example, the pH could be adjusted to ≈13 to minimize the solubility of uranium, other actinides, rare earths, cobalt, and other metals, and a polyelectrolyte is proposed to improve clarification properties. The solids could be solidified directly or returned to the MVSTs for storage and the supernate processed. Sodium titanate (to remove ^{90}Sr) and other scavengers could also be added, if desired. Alternatively, the pH could be adjusted to ~10.5 and NaNiFC added to remove ^{137}Cs; in this case, the solids should not be returned to the MVSTs. Such head-end steps would remove actinides and rare earths (europium may be present), any solids entrained in the supernate or produced by the feed adjustment, and any activity loaded on added sorbents.

Additional stages could be used in series, but all except the first stage would use only the ion-exchange sorbents. It is necessary to adjust the pH to ≈10.5 for all stages using FC for cesium removal. The equipment up to and including the first ion-exchange stage would require substantial shielding, while the others would need good containment and light shielding. Calculated cesium DFs are shown in Table A-2 for the second stage of a two-stage process, for which Table A-1 represents the first stage.

ORNL DWG 89A-1142

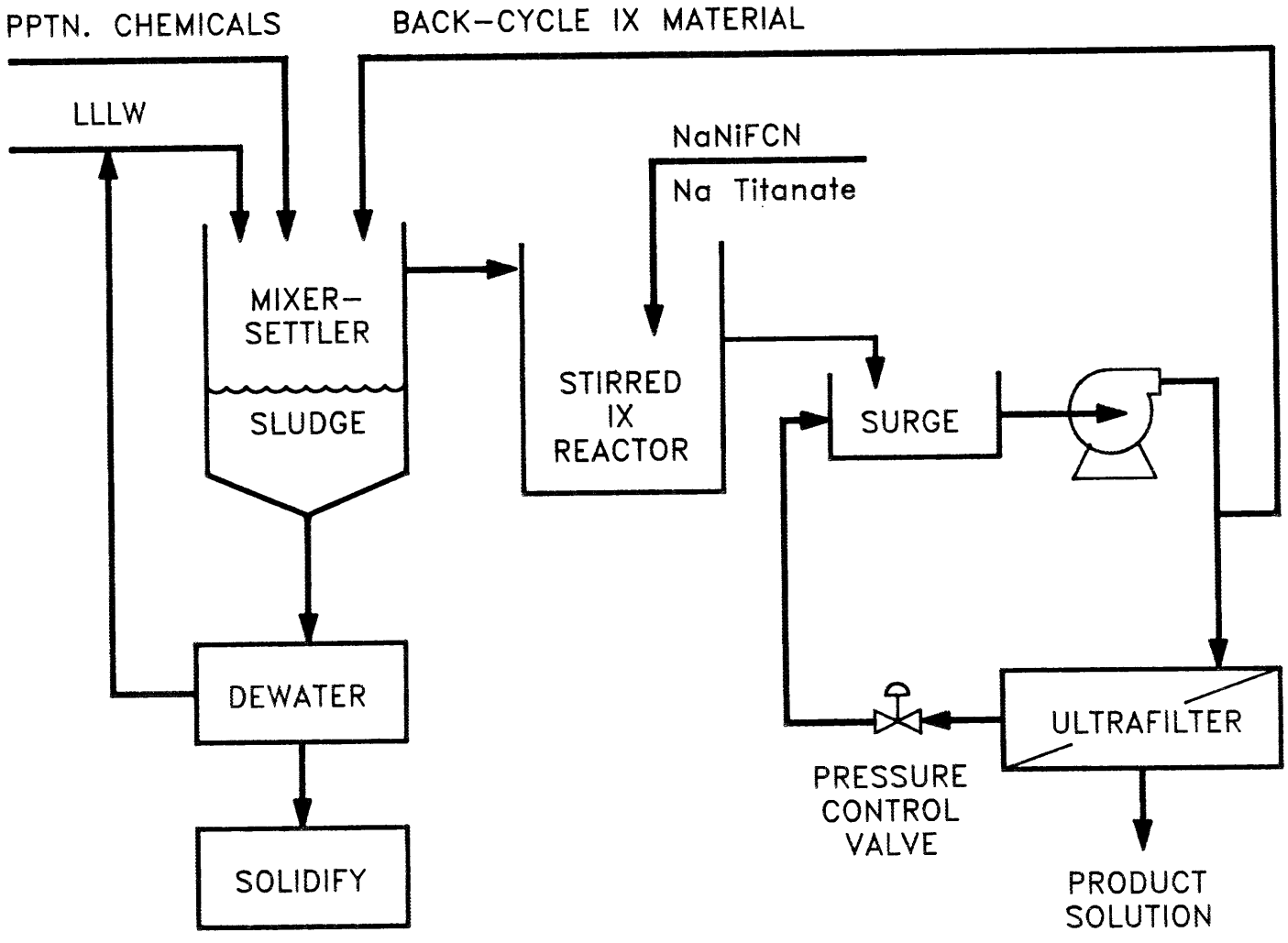

Fig. 2. Two-stage IX-UF process for LLLW

ORNL DWG 91A-240

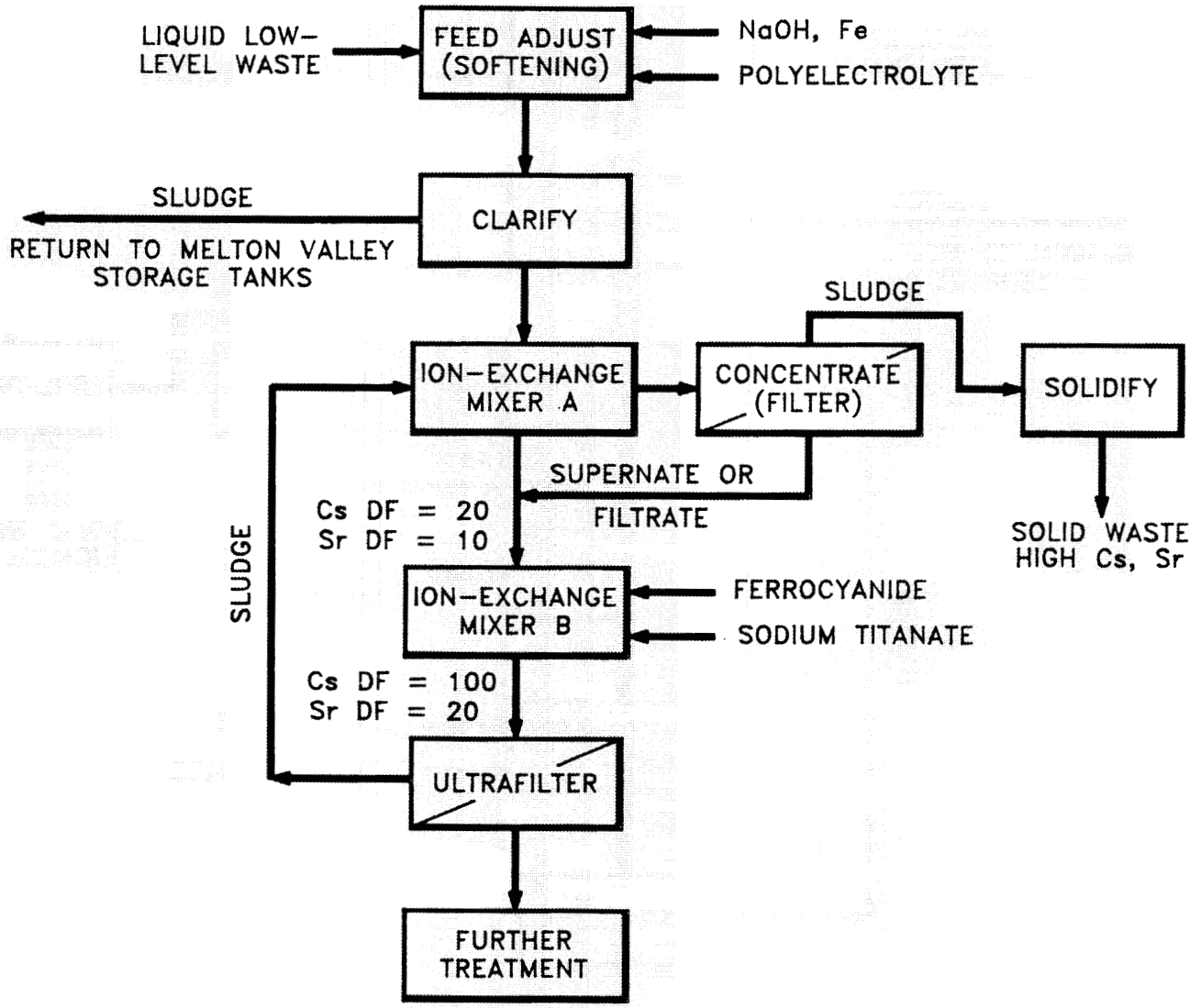

Fig. 3. Supernate batch processing flowsheet (Alternate A)

ORNL DWG 91A-239

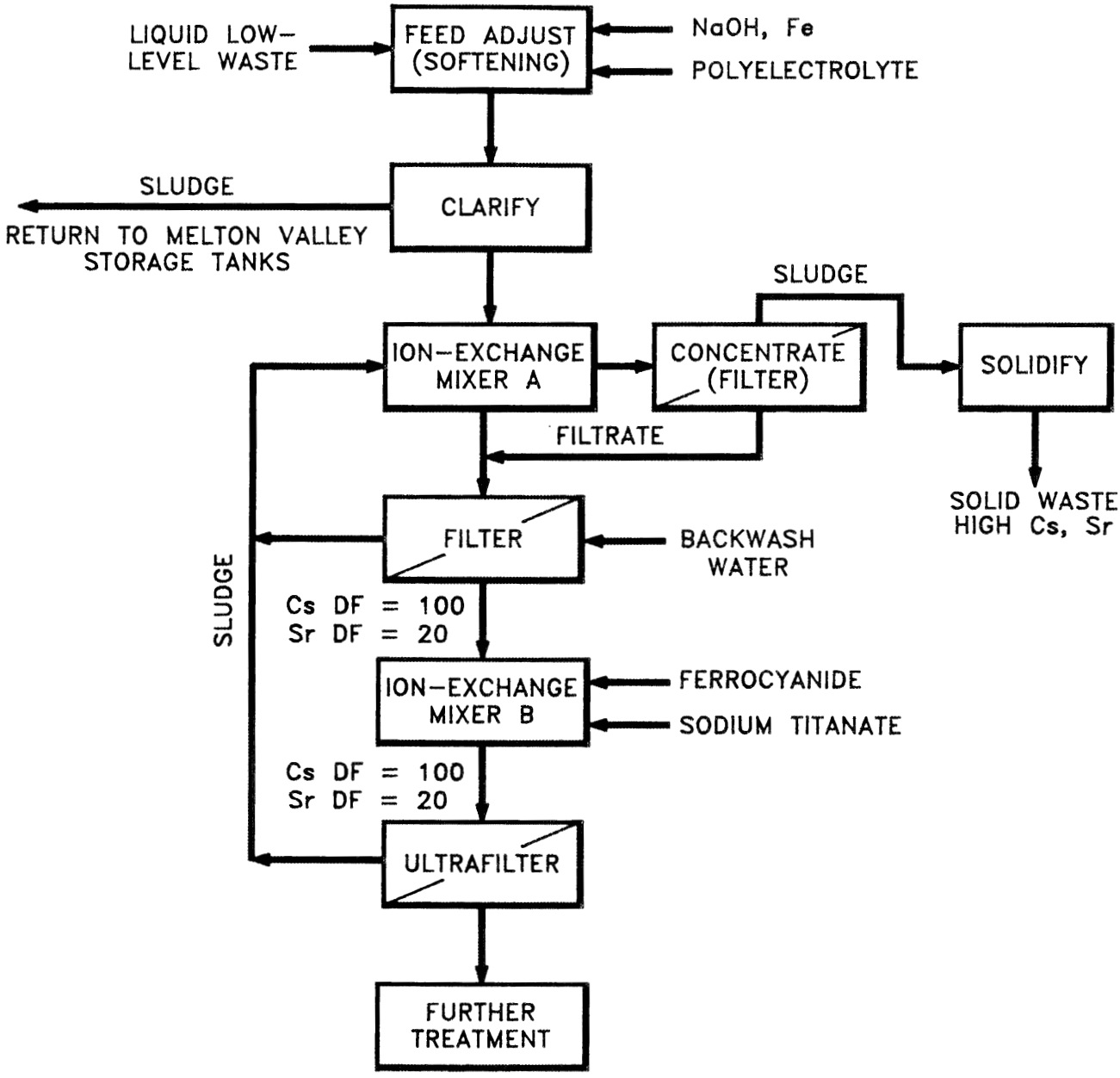

Fig. 4. Supernate batch processing flowsheet (Alternate B)

It should also be pointed out that quantitative removal of the spent sorbent prior to replacement with new sorbent is not necessary in a batch process. This is illustrated in Table A-3, which is calculated for two successive processing campaigns under the same conditions as Table A-1. After 10,000 L of product are produced (upper half of Table A-3), 90% of the sorbent is assumed to be removed as solid waste, new sorbent is added at the rate of 1040 ppm based on the contactor volume (1144 ppm total sorbent including the 10% heel), and successive batches of waste supernate are processed as before (the lower half of Table A-3). The cumulative DF values are only slightly reduced at the end of the campaign, from 182 to 175. There is no significant further reduction in subsequent campaign cycles done the same way. This is in marked contrast to the situation with ion-exchange columns, in which serious contamination of effluent streams can result from small amounts of loaded exchanger being left near the bottom of a column when resin is replaced or regenerated. In effect, the advantage of column operation, resulting from the inherent multistage performance, is short-circuited.

When separation stages or processes are used in series in this manner, there is no assurance that such large DFs can actually be obtained because nonequilibrium chemical species present in small concentrations can limit the decontamination process. This is equally true for both batch and column processes. If very large DFs are required, it might be advantageous to use a column process after the first batch separation, which would remove the bulk of the contamination.

A three-stage batch flowsheet that includes ion-exchange columns for further decontamination is illustrated in Fig. 5. As shown in this flowsheet, the sorbent (NaNiFC plus NaT) is moved forward one stage (countercurrent to the solution flow) when each batch transfer is made, and the contaminated sorbent (along with any sludge originally entrained with the supernate) is removed only from the first stage; this approach generates the smallest additional quantity of solid waste. The pH is 10.5 to 11 throughout, so that good cesium DF can be achieved using FCs in each stage. The three-stage batch separation part of this flowsheet was roughly tested (without countercurrent movement of sorbent) using MVST W-26 supernate solution from a sample taken prior to recent transfers.[4]

An alternative way of operating the same flowsheet would be to carry out the first-stage process at a higher pH, ≈13, possibly with NaT added (Fig. 6). The pH would then be adjusted to ~10.5 for the second and third stages; and NaNiFC (and NaT if necessary) would be added to the third stage, transferred to the second, and withdrawn from the

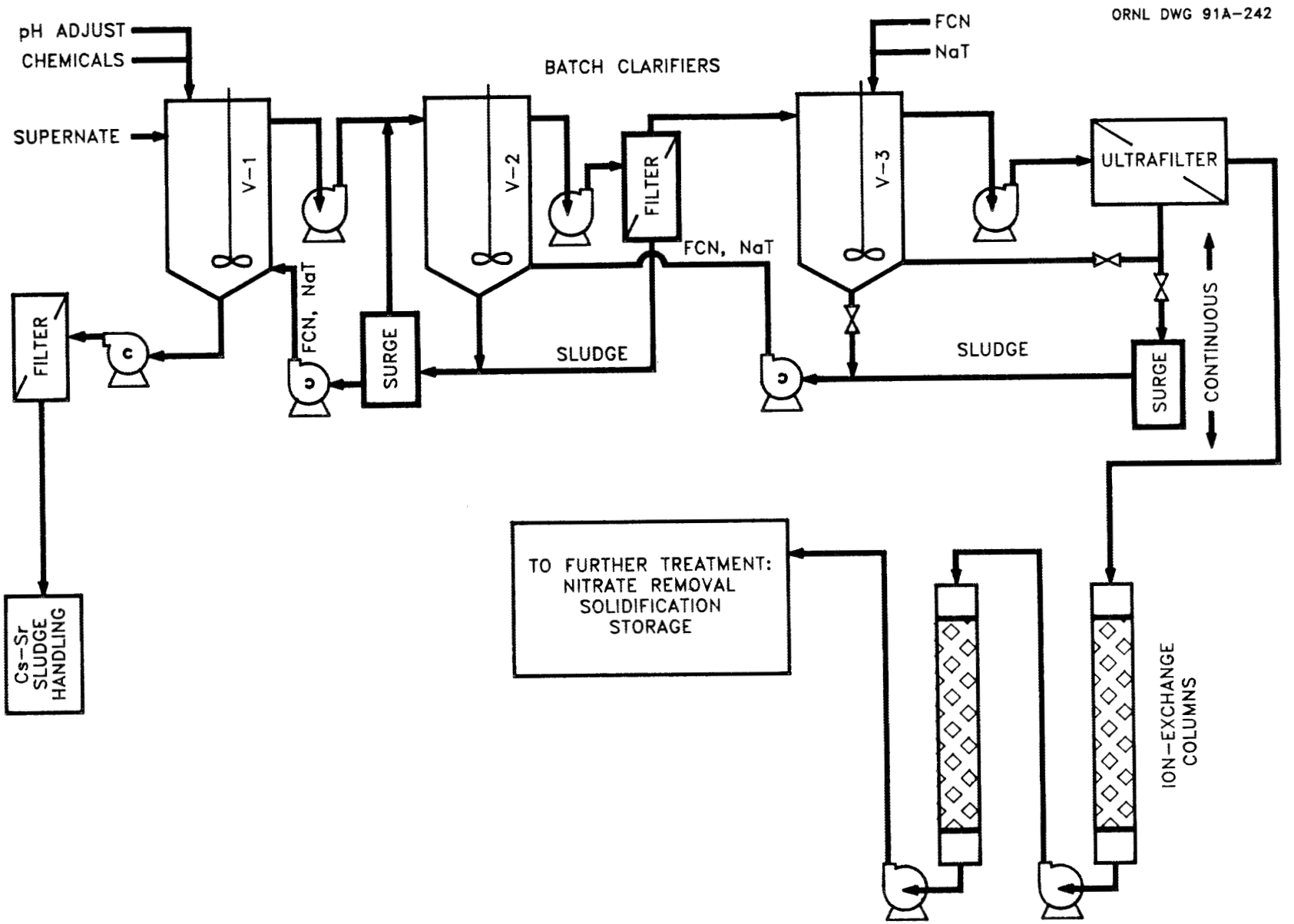

Fig. 5. Near-term supernate treatment reference flowsheet

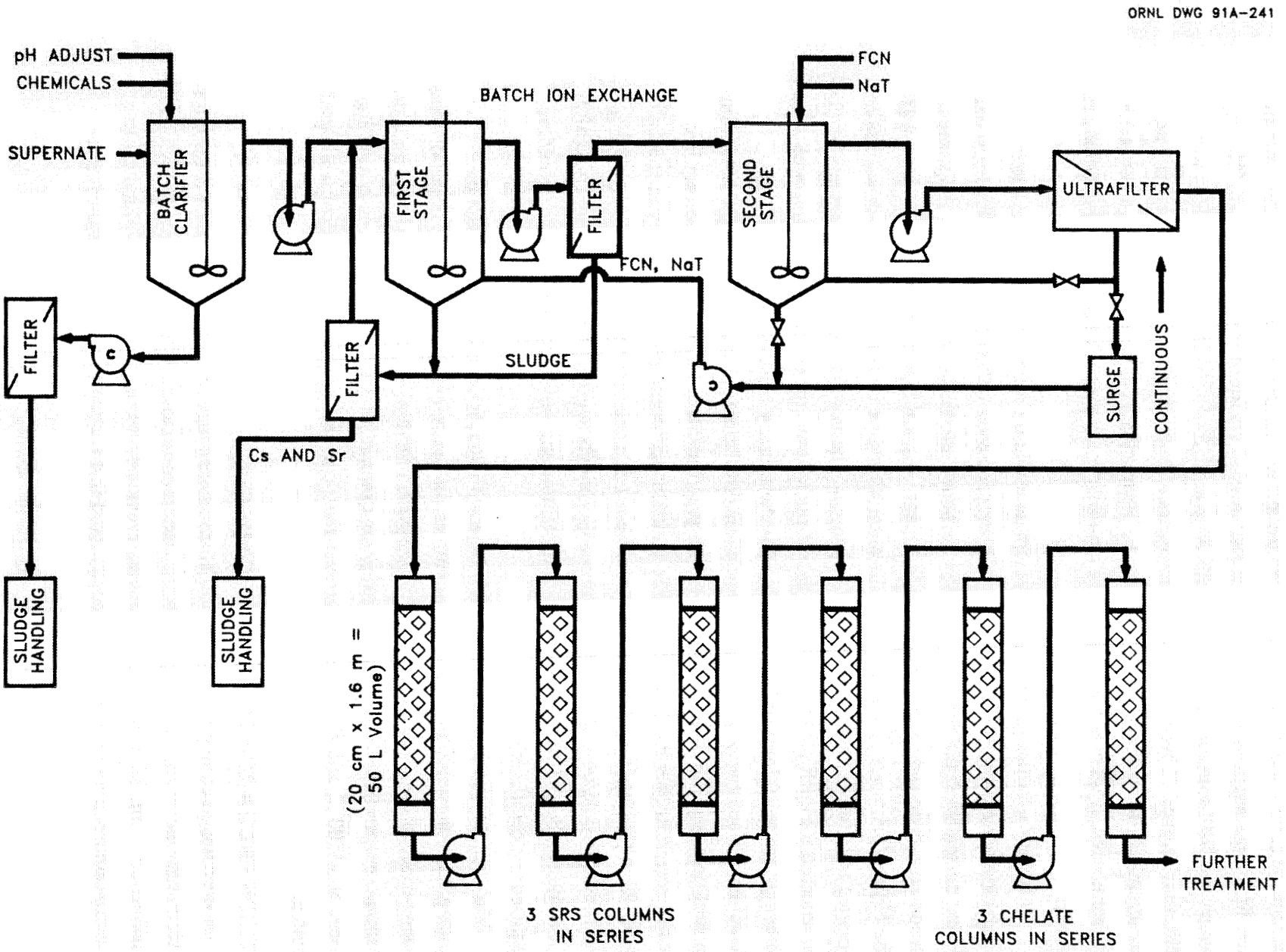

Fig. 6. Supernate treatment with batch sorption and ion-exchange columns

second stage to prevent NaNiFC from entering the high-pH first stage. The high pH of the first stage might be advantageous to give larger DFs for alpha, as well as for ^{90}Sr, for which the NaT sorbent is much more effective at high pH. This flowsheet yields two different sludges. These batch separations should give a large DF for both cesium and strontium, in the order of 1×10^6 and 1×10^5, respectively, depending on the amounts of sorbents used; if greater DF is required, ion-exchange columns could be used in series, as shown.

In these cases, the sorbent and other solids would be retained within each batch contactor while many batches of supernate are processed through it. The loaded sorbent would be removed and replaced with new sorbent periodically, or (as shown) the sorbent would be transferred to the next preceding stage. At some point, probably the stage with the highest pH, a very high quality clarification should be carried out. Cross-flow filtration appears to be a practical clarification method, and the pore size of the filter membrane can be selected for each particular application (from several μm down to ultrafilters with pore openings in the 10^{-3}-μm range). The filter is the primary maintenance item in this flowsheet. Since the γ-activity is relatively low downstream from the first stage of cesium separation, hands-on maintenance should be practical there. Shielding will be required where cesium is present, however, so low-maintenance operations are favored in the first stage. It is possible that decantation could be used in the first stage, as illustrated in Fig. 2, but the DF would be smaller. Laboratory experiments suggest the DF would be ≈20 after a 1-d settling period (compared to ≈100 with filtration), but larger-scale testing would be required to verify that.

The use of cross-flow filtration following each batch separation stage would be appropriate for a continuous process as well as for one using repeated batch cycles of feed-mixing-clarification. The ion-exchange absorption reactions are relatively fast. As a result, it should be practical to feed continuously, for example, at 1 or a few L/min, into a mixing vessel of ≥1000 L, and filter continuously at the same rate to produce the decontaminated product.

5.2 ION-EXCHANGE COLUMN FLOWSHEETS

Ion-exchange columns containing organic ion-exchange materials, such as SRS resin for cesium and one of the chelating resins for strontium removal, may prove useful after initial clarification of the supernate. As discussed previously, throughputs of a few hundred to a few thousand bed volumes can be expected; and this is adequate for process purposes.

When properly operated, ion-exchange columns give the largest DF attainable with the particular solution being treated.

The flow scheme for column operation involves columns in series, operated in carousel fashion; that is, as a column is loaded at the front end, it is taken out of service and the next one in series moves to the front. A new column is then placed in the last position in the train. This mode of operation provides much higher utilization of the resin-loading capacity than single-column operation because the loading-band front can be moved below the first column before significant breakthrough occurs from the last column; thus, a column is removed only when all the contained resin is loaded to saturation. Three columns in series for cesium and two or three for strontium are expected to yield adequate results and give much flexibility. Since the K_ds for strontium using chelating resins are several times larger than those for cesium with SRS resins, smaller columns would be required, or the same size columns would have to be changed much less frequently.

Clarification followed by three columns of SRS resin in series for cesium removal, followed by two or three columns of chelating resin to remove strontium, would provide excellent removal of cesium and strontium activity in the supernate (Fig. 7). A combination of batch absorption followed by ion-exchange columns (as indicated in Figs. 5 and 6) would provide a lower radiation field in the vicinity of the columns, thereby simplifying maintenance; and this should give the maximum DF reasonably attainable. In combination with a nitrate removal and nitric acid recovery process, such a flowsheet might produce an effluent that could be discharged.

The column size can be estimated from the residence time requirement which is related to exchange kinetics. Experimental data have shown that residence times of at least 30 min are required for good cesium removal with SRS resin in column operations. Assuming a 200-bed-volume capacity with SRS resin, and a flow rate of 76 L/h (20 gal/h), the column volume must be at least 38 L for a 30-min residence time. This would treat 160 gal/d on a basis of 8 h/d, or 480 gal/d with 24-h operation. As an example, a volume of 50 L for each column gives a residence time of ≈40 min. Columns of this volume could be sized to be 2.7 m tall by 15.2 cm diameter (6 in. diameter by 9 ft tall) or 1.6 m tall by 20 cm diameter (8 in. diameter by 5.2 ft tall). Three such columns would be used in series with SRS resin and two or three columns (probably smaller) in series with chelating resin.

Such columns would be expected to last for at least a 200-bed-volume throughput for SRS resin and very much longer for chelating resin. The time between column change-outs would be 133 operating hours (5.5 d at 24 h/d or 16.5 d at 8 h/d) for the 50 L columns.

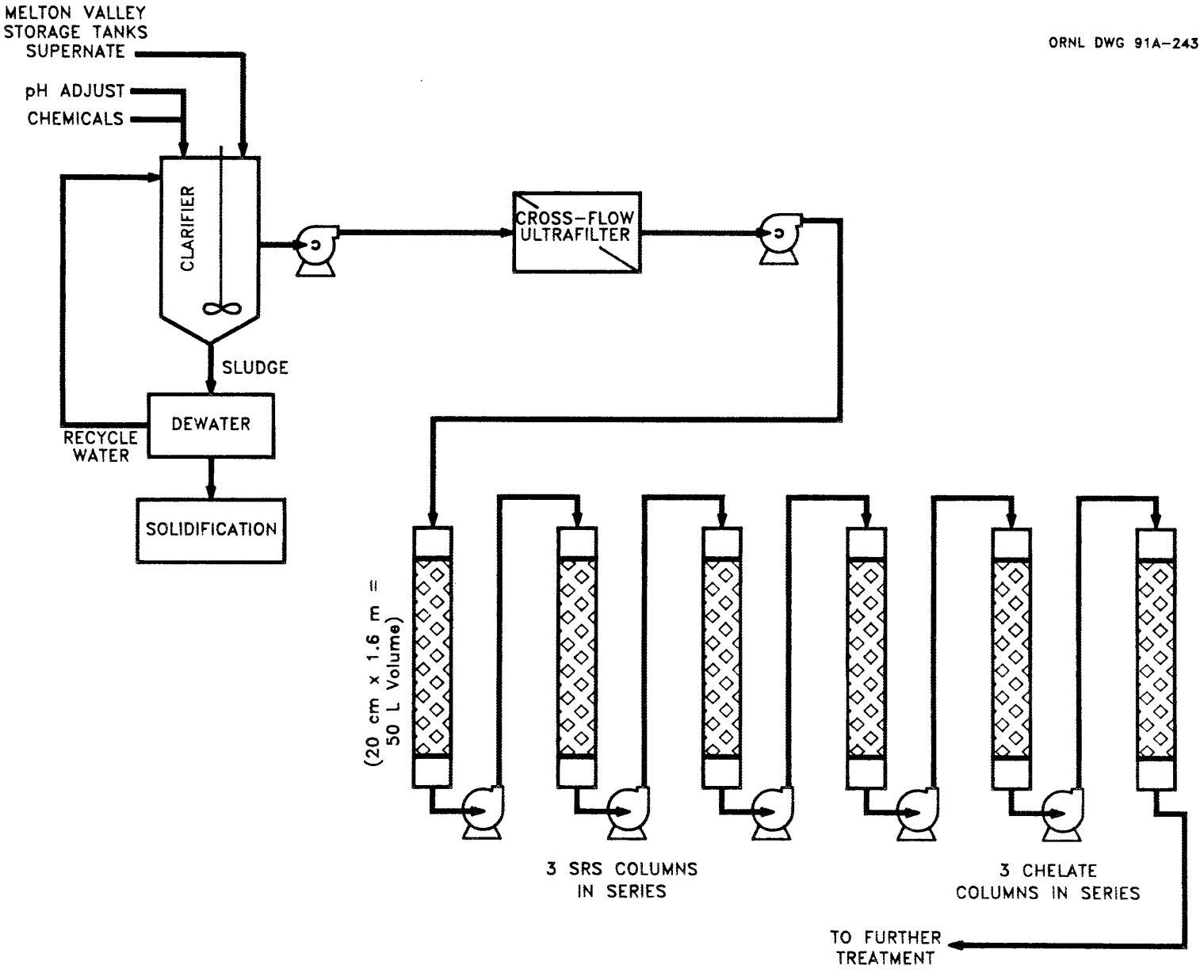

Fig. 7. Clarification-ion-exchange column flowsheet

Column change-out or elution would be required ≈40 times for processing the current supernate inventory. Since the K_ds for Sr with the chelating resins are several times larger, a column of chelating resin of the same size would last many weeks to a few months before change-out is required (e.g., 3600 BV x 50 L ÷ 1800 L/d ≈ 100 d). It would be better to use smaller columns for the chelating resin, within the kinetic limits of the exchange reaction.

As noted earlier, the ion-exchange resins might be regenerated and used for repeated loading cycles, or the resin could be removed and replaced for subsequent cycles. In the former case, regeneration introduces considerable complexity into the system and generates new waste streams that must be recycled or solidified. Also, if not eluted to a satisfactory extent of completion, the subsequent effluent solution will not be adequately decontaminated. The latter case requires quantitative removal of spent resin from the column or use of the column as the disposal container (both of which lead to design constraints), and a system for solidifying the resin as a solid waste. Solidified waste forms containing resins have frequently caused problems because of swelling, but the resin can be burned or thermally decomposed to yield an inert product for solidification.[17]

6. REFERENCES

1. M. B. Sears, J. L. Botts, R. N. Ceo, J. J. Ferrada, W. H. Griest, J. M. Keller, and R. J. Schenley, Sampling and Analysis of Radioactive Liquid Wastes and Sludges in the Melton Valley and Evaporator Storage Tanks at ORNL, ORNL/TM-11652, September 1990.

2. D. D. Lee and D. O. Campbell, Low Level Liquid Waste Decontamination Requirements for Disposal Options, ORNL/TM 11799, October 1991.

3. D. O. Campbell, D. D. Lee, and T. A. Dillow, "Low-Level Liquid Waste decontamination by Ion Exchange," Waste Management '90, Vol. 2, R. G. Post, Ed., pp. 389-98 (1990).

4. D. O. Campbell, D. D. Lee, and T. A. Dillow, Development Studies for Treatment of ORNL Low-Level Liquid Waste, ORNL/TM-11798, November 1991.

5. M. A. Ebra, R. M. Wallace, D. D. Walker, and R. A. Wille, "Tailored Ion Exchange Resins for Combined Cesium and Strontium Removal from Soluble SRP High-Level Waste," The Scientific Basis for Nuclear Waste Management, S. V. Topp, Ed, p. 632, Elsever (1982).

6. J. P. Bibler, R. M. Wallace, and L. A. Bray, "Testing a New Cesium-Specific Ion Exchange Resin for Decontamination of Alkaline High-Activity Waste," Waste Management '90, Vol. 2, R. G. Post, Ed, pp. 747-51 (1990).

7. P. D. D'Entremont and D. D. Walker, "Tank Farm Processing of High-Level Waste for the Defense Waste Processing Facility,"Waste Management '87, Vol. 2, R. G. Post, Ed., pp. 69-73 (1987).

8. W. E. Prout, E. R. Russell, and H. J. Groh, "Ion Exchange Absorption of Cesium by Potassium Hexacyanocobalt(II) Ferrate(II)," J. Inorg. Nucl. Chem., 27, 473 (1965).

9. E. W. Hooper, B. A. Phillips, S. P. Dagnall, and N. P. Monckton, An Assessment of the Application of Inorganic Ion Exchangers to the Treatment of Intermediate Level Wastes, AERE-R 11088, Atomic Energy Research Establishment, Harwell, 1984.

10. B. A. Phillips and E. W. Hooper, Study of the Behavior of Inorganic Ion Exchangers in the Treatment of Medium Active Effluents, Part I. Preliminary Experimental Work on Absorber Preparation and Performance, AERE-G 2872, Atomic Energy Research Establishment, Harwell, 1988.

11. G. W. Beaven, J. E. Cross, and E. W. Hooper, Study of the Behavior of Inorganic Ion Exchangers in the Treatment of Medium Active Effluents, Part IV. Further Studies on Absorber Performance, AERE-G 4381, Atomic Energy Research Establishment, Harwell, 1988.

12. J. Lehto and R. Harjula, "Separation of Cesium from Nuclear Waste Solutions with Hexacyanoferrate(II)s and ammonium phosphomolybdate," Solvent Extr. Ion Exch., 5(2), 343-52 (1987).

13. E. P. Horwitz, M. L. Dietz, and D. E. Fisher, "SREX: A New Process for the Extraction and Recovery of Strontium from Acidic Nuclear Waste Streams," Solvent Extr. Ion Exch., in press.

14. R. G. Dosch, Final Report on the Application of Titanates, Niobates, and Tantalates to Neutralized Defense Waste Decontamination— Materials, Properties, Physical Forms, and Regeneration Techniques, SAND80-1212, Sandia National Lab., 1981.

15. C. W. Beaven, J. E. Cross, and E. W. Hooper, Study of the Behavior of Inorganic Ion Exchangers in the Treatment of Medium Active Effluents, Part V. The Encapsulation of Inorganic Ion Exchangers in Concrete, AERE-G 4421, Atomic Energy Research Establishment, Harwell, 1988.

16. Washington State Department of Ecology and Washington State Department of Health, "Special Report: Ferrocyanide in Single-Shell High-Level Waste Tanks at Hanford," (July 30, 1990).

17. F. R. Chattin, D. E. Benker, M. H. Lloyd, P. B. Orr, R. G. Ross, and J. T. Wiggins, "Preparation of Curium-Americium Oxide Microspheres by Resin-Bead Loading," ACS Symposium Series, No. 161, Transplutonium Elements— Production and Recovery, J. D. Navratil and W. Schulz, Eds., pp. 173-85, American Chemical Society, 1981.

APPENDIX

Table A-1. Calculated cesium removal in 1000-L one-stage mixer with successive 500-L feed batches*

Batch No.	Volume feed in	Volume total fed	Total activity present	Sorbent load xC_0	Aq conc C/C_0	Volume out (cum)	Total volume out	Total activity out (xC_0)	Batch DF	Cumulative DF
1	1000	1000	1000	999	9.61E-04	500	500	0.48	1041	1041
2	500	1500	1500	1498	1.44E-03	500	1000	1.20	694	833
3	500	2000	1999	1997	1.92E-03	500	1500	2.16	521	694
4	500	2500	2498	2495	2.40E-03	500	2000	3.36	417	595
5	500	3000	2997	2994	2.88E-03	500	2500	4.80	347	521
6	500	3500	3495	3492	3.36E-03	500	3000	6.48	298	463
7	500	4000	3994	3990	3.84E-03	500	3500	8.40	261	417
8	500	4500	4492	4487	4.31E-03	500	4000	10.55	232	379
9	500	5000	4989	4985	4.79E-03	500	4500	12.95	209	347
10	500	5500	5487	5482	5.27E-03	500	5000	15.59	190	321
11	500	6000	5984	5979	5.75E-03	500	5500	18.46	174	298
12	500	6500	6482	6475	6.23E-03	500	6000	21.57	161	278
13	500	7000	6978	6972	6.70E-03	500	6500	24.93	149	261
14	500	7500	7475	7468	7.18E-03	500	7000	28.52	139	245
15	500	8000	7971	7964	7.66E-03	500	7500	32.34	131	232
16	500	8500	8468	8460	8.13E-03	500	8000	36.41	123	220
17	500	9000	8964	8955	8.61E-03	500	8500	40.72	116	209
18	500	9500	9459	9450	9.09E-03	500	9000	45.26	110	199
19	500	10000	9955	9945	9.56E-03	500	9500	50.04	105	190
20	500	10500	10450	10440	1.00E-02	500	10000	55.06	100	182
21	500	11000	10945	10934	1.05E-02	500	10500	60.32	95	174
22	500	11500	11440	11429	1.10E-02	500	11000	65.81	91	167
23	500	12000	11934	11923	1.15E-02	500	11500	71.54	87	161
24	500	12500	12428	12417	1.19E-02	500	12000	77.51	84	155
25	500	13000	12922	12910	1.24E-02	500	12500	83.72	81	149
26	500	13500	13416	13403	1.29E-02	500	13000	90.16	78	144
27	500	14000	13910	13896	1.34E-02	500	13500	96.85	75	139
28	500	14500	14403	14389	1.38E-02	500	14000	103.76	72	135
29	500	15000	14896	14882	1.43E-02	500	14500	110.92	70	131
30	500	15500	15389	15374	1.48E-02	500	15000	118.31	68	127
31	500	16000	15882	15866	1.53E-02	500	15500	125.94	66	123
32	500	16500	16374	16358	1.57E-02	500	16000	133.80	64	120
33	500	17000	16866	16850	1.62E-02	500	16500	141.90	62	116
34	500	17500	17358	17341	1.67E-02	500	17000	150.24	60	113
35	500	18000	17850	17833	1.71E-02	500	17500	158.81	58	110
36	500	18500	18341	18324	1.76E-02	500	18000	167.62	57	107
37	500	19000	18832	18814	1.81E-02	500	18500	176.67	55	105
38	500	19500	19323	19305	1.86E-02	500	19000	185.95	54	102
39	500	20000	19814	19795	1.90E-02	500	19500	195.47	53	100
40	500	20500	20305	20285	1.95E-02	500	20000	205.22	51	97
41	500	21000	20795	20775	2.00E-02	500	20500	215.21	50	95
42	500	21500	21285	21264	2.04E-02	500	21000	225.43	49	93
43	500	22000	21775	21754	2.09E-02	500	21500	235.89	48	91
44	500	22500	22264	22243	2.14E-02	500	22000	246.58	47	89

*$K_d = 1 \times 10^6$ ppm NaNiFC added = 1040, based on 1000 L volume

Table A-2. Calculated cesium removal in second-stage 1000-L mixer with successive 500 L feed batches from first-stage separation shown in Table A-1*

Batch No.	Volume feed in	Total activity present	Sorbent load xC_0	Aq conc C/C_0	Volume out	Total volume out (xC_0)	Total activity out (xC_0)	Batch DF	Cumulative DF
1	500	0.48	0.48	4.61E-07	0	0			
2	500	1.20	1.20	1.15E-06	500	500	5.77E-04	867111	867111
3	500	2.16	2.16	2.07E-06	500	1000	1.61E-03	481945	619544
4	500	3.36	3.36	3.23E-06	500	1500	3.23E-03	309942	464785
5	500	4.80	4.79	4.61E-06	500	2000	5.53E-03	217038	361596
6	500	6.47	6.47	6.22E-06	500	2500	8.64E-03	160825	289352
7	500	8.39	8.38	8.06E-06	500	3000	1.27E-02	124108	236803
8	500	10.54	10.53	1.01E-05	500	3500	1.77E-02	98755	197386
9	500	12.93	12.92	1.24E-05	500	4000	2.39E-02	80494	167061
10	500	15.56	15.55	1.49E-05	500	4500	3.14E-02	66894	143231
11	500	18.43	18.41	1.77E-05	500	5000	4.03E-02	56488	124164
12	500	21.53	21.51	2.07E-05	500	5500	5.06E-02	48344	108670
13	500	24.87	24.85	2.39E-05	500	6000	6.26E-02	41850	95909
14	500	28.45	28.43	2.73E-05	500	6500	7.62E-02	36587	85274
15	500	32.27	32.24	3.10E-05	500	7000	9.17E-02	32261	76316
16	500	36.32	36.28	3.49E-05	500	7500	1.09E-01	28662	68701
17	500	40.61	40.57	3.90E-05	500	8000	1.29E-01	25636	62173
18	500	45.13	45.09	4.34E-05	500	8500	1.50E-01	23066	56535
19	500	49.89	49.84	4.79E-05	500	9000	1.74E-01	20866	51632
20	500	54.89	54.83	5.27E-05	500	9500	2.01E-01	18967	47340
21	500	60.12	60.06	5.77E-05	500	10000	2.30E-01	17316	43564
22	500	65.58	65.52	6.30E-05	500	10500	2.61E-01	15873	40222
23	500	71.28	71.21	6.85E-05	500	11000	2.95E-01	14604	37252
24	500	77.22	77.14	7.42E-05	500	11500	3.32E-01	13481	34600
25	500	83.39	83.31	8.01E-05	500	12000	3.72E-01	12484	32221
26	500	89.79	89.71	8.63E-05	500	12500	4.16E-01	11593	30080
27	500	96.43	96.34	9.26E-05	500	13000	4.62E-01	10795	28146
28	500	103.30	103.20	9.92E-05	500	13500	5.11E-01	10077	26394
29	500	110.41	110.30	1.06E-04	500	14000	5.65E-01	9429	24800
30	500	117.74	117.63	1.13E-04	500	14500	6.21E-01	8841	23347
31	500	125.32	125.20	1.20E-04	500	15000	6.81E-01	8307	22018
32	500	133.12	132.99	1.28E-04	500	15500	7.45E-01	7820	20800
33	500	141.16	141.02	1.36E-04	500	16000	8.13E-01	7375	19680
34	500	149.43	149.28	1.44E-04	500	16500	8.85E-01	6967	18649
35	500	157.93	157.78	1.52E-04	500	17000	9.61E-01	6592	17697
36	500	166.66	166.50	1.60E-04	500	17500	1.04E+00	6246	16816
37	500	175.63	175.46	1.69E-04	500	18000	1.13E+00	5927	16000
38	500	184.82	184.65	1.78E-04	500	18500	1.21E+00	5632	15241
39	500	194.25	194.07	1.87E-04	500	19000	1.31E+00	5359	14536
40	500	203.91	203.72	1.96E-04	500	19500	1.41E+00	5105	13879
41	500	213.80	213.60	2.05E-04	500	20000	1.51E+00	4869	13265
42	500	223.92	223.71	2.15E-04	500	20500	1.62E+00	4649	12691
43	500	234.27	234.05	2.25E-04	500	21000	1.73E+00	4444	12154

*$K_d = 1 \times 10^6$ ppm NaNiFC added = 1040, based on 1000 L volume

Table A-3. Calculated cesium removal in one-stage 1000-L mixer with successive 500 L feed batches*

Batch No.	Volume feed in	Volume total fed	Total activity present	Sorbent load xC_0	Aq conc C/C_0	Volume out	Total vol out	Total activity out (xC_0)	Batch DF	Cumulative DF (cycle)	Cumulative DF (total)
1	1000	1000	1000	999	9.61E-04	500	500	0.48	1041	1041	s
2	500	1500	1500	1498	1.44E-03	500	1000	1.20	694	833	a
3	500	2000	1999	1997	1.92E-03	500	1500	2.16	521	694	m
4	500	2500	2498	2495	2.40E-03	500	2000	3.36	417	595	e
5	500	3000	2997	2994	2.88E-03	500	2500	4.80	347	521	
6	500	3500	3495	3492	3.36E-03	500	3000	6.48	298	463	a
7	500	4000	3994	3990	3.84E-03	500	3500	8.40	261	417	s
8	500	4500	4492	4487	4.31E-03	500	4000	10.55	232	379	
9	500	5000	4989	4985	4.79E-03	500	4500	12.95	209	347	c
10	500	5500	5487	5482	5.27E-03	500	5000	15.59	190	321	y
11	500	6000	5984	5979	5.75E-03	500	5500	18.46	174	298	c
12	500	6500	6482	6475	6.23E-03	500	6000	21.57	161	278	l
13	500	7000	6978	6972	6.70E-03	500	6500	24.93	149	261	e
14	500	7500	7475	7468	7.18E-03	500	7000	28.52	139	245	
15	500	8000	7971	7964	7.66E-03	500	7500	32.34	131	232	D
16	500	8500	8468	8460	8.13E-03	500	8000	36.41	123	220	F
17	500	9000	8964	8955	8.61E-03	500	8500	40.72	116	209	
18	500	9500	9459	9450	9.09E-03	500	9000	45.26	110	199	
19	500	10000	9955	9945	9.56E-03	500	9500	50.04	105	190	
20	500	10500	10450	10440	1.00E-02	500	10000	55.06	100	182	
Cycle 2: Process through batch 20 of Table 3; Remove 90% of sorbent; Add new sorbent; Continue.											
1	1000	1000	2044	2042	1.79E-03	500	500	0.89	560	560	188
2	500	1500	2543	2541	2.22E-03	500	1000	2.00	450	499	193
3	500	2000	3042	3039	2.66E-03	500	1500	3.33	376	450	197
4	500	2500	3541	3538	3.09E-03	500	2000	4.88	323	410	200
5	500	3000	4039	4036	3.53E-03	500	2500	6.64	283	376	203
6	500	3500	4537	4533	3.96E-03	500	3000	8.62	252	348	204
7	500	4000	5035	5031	4.40E-03	500	3500	10.82	227	323	205
8	500	4500	5533	5528	4.83E-03	500	4000	13.24	207	302	205
9	500	5000	6031	6025	5.27E-03	500	4500	15.87	190	284	204
10	500	5500	6528	6522	5.70E-03	500	5000	18.72	175	267	203
11	500	6000	7025	7019	6.14E-03	500	5500	21.79	163	252	202
12	500	6500	7522	7516	6.57E-03	500	6000	25.07	152	239	200
13	500	7000	8019	8012	7.00E-03	500	6500	28.58	143	227	197
14	500	7500	8515	8508	7.44E-03	500	7000	32.29	134	217	195
15	500	8000	9012	9004	7.87E-03	500	7500	36.23	127	207	192
16	500	8500	9508	9499	8.30E-03	500	8000	40.38	120	198	189
17	500	9000	10004	9995	8.74E-03	500	8500	44.75	114	190	185
18	500	9500	10499	10490	9.17E-03	500	9000	49.34	109	182	182
19	500	10000	10995	10985	9.60E-03	500	9500	54.14	104	175	179
20	500	10500	11490	11480	1.00E-02	500	10000	59.15	100	169	175

*$K_d = 1 \times 10^6$ ppm NaNiFC added = 1040, based on 1000 L volume

INTERNAL DISTRIBUTION

1. H. L. Adair
2. J. M. Begovich
3. J. T. Bell
4. J. B. Berry
5. W. D. Bond
6. C. H. Brown, Jr.
7. C. O. Campbell
8. R. M. Canon
9. E. D. Collins
10. K. W. Cook
11. A. G. Croff
12. T. A. Dillow
13. S. M. DePaoli
14. C. P. East
15. B. Z. Egan
16. W. Fulkerson
17. R. K. Genung
18. J. R. Hightower
19. L. Holder
20. E. K. Johnson
21. C. M. Kendrick
22. T. E. Kent
23. J. R. Lawson
24-25. D. D. Lee
26. J. J. Maddox
27. R. C. Mason
28. A. J. Mattus
29. L. E. McNeese
30. L. J. Mezga
31. J. J. Perona
32. D. J. Peterson
33. D. R. Reichle
34. S. M. Robinson
35. T. F. Scanlan
36. C. B. Scott
37. M. G. Stewart
38. P. A. Taylor
39. J. R. Trabalka
40. D. W. Turner
41. E. L. Youngblood
42. Cen. Res. Library
43. Doc. Ref. Section
44-45. Lab Records
46. Lab Records. R.C.
47. ORNL Pat. Sect.

EXTERNAL DISTRIBUTION

48. Office of Assistant Manager, Energy Research and Development, DOE-OR, P. O. Box 2001, Oak Ridge, TN 37831-8600

49-58. Office of Scientific and Technical Information, P. O. Box 62, Oak Ridge, TN 37831