MARTIN MARIETTA ENERGY SYSTEMS LIBRARIES

3 4456 0316645 5

ORNL/TM-11633

ornl

OAK RIDGE
NATIONAL
LABORATORY

MARTIN MARIETTA

Florida Radioluminescent Taxiway Light Development Program

Final Report

K. W. Haff
J. A. Tompkins
D. T. Travis

OAK RIDGE NATIONAL LABORATORY
CENTRAL RESEARCH LIBRARY
CIRCULATION SECTION
4500N ROOM 175
LIBRARY LOAN COPY
DO NOT TRANSFER TO ANOTHER PERSON
If you wish someone else to see this report, send in name with report and the library will arrange a loan.

OPERATED BY
MARTIN MARIETTA ENERGY SYSTEMS, INC.
FOR THE UNITED STATES
DEPARTMENT OF ENERGY

This report has been reproduced directly from the best available copy.

Available to DOE and DOE contractors from the Office of Scientific and Technical Information, P.O. Box 62, Oak Ridge, TN 37831; prices available from (615) 576-8401, FTS 626-8401.

Available to the public from the National Technical Information Service, U.S. Department of Commerce, 5285 Port Royal Rd., Springfield, VA 22161.
NTIS price codes—Printed Copy: A09 Microfiche A01

This report was prepared as an account of work sponsored by an agency of the United States Government. Neither the United States Government nor any agency thereof, nor any of their employees, makes any warranty, express or implied, or assumes any legal liability or responsibility for the accuracy, completeness, or usefulness of any information, apparatus, product, or process disclosed, or represents that its use would not infringe privately owned rights. Reference herein to any specific commercial product, process, or service by trade name, trademark, manufacturer, or otherwise, does not necessarily constitute or imply its endorsement, recommendation, or favoring by the United States Government or any agency thereof. The views and opinions of authors expressed herein do not necessarily state or reflect those of the United States Government or any agency thereof.

ORNL/TM-11633

Chemical Technology Division

FLORIDA RADIOLUMINESCENT TAXIWAY LIGHT DEVELOPMENT PROGRAM

Final Report

K. W. Haff
J. A. Tompkins*
D. T. Travis**

Date Published - October 1990

*Now employed by Westinghouse Electric Corporation, Las Vegas, Nevada.
**City of St. Petersburg, Florida.

Prepared by the
OAK RIDGE NATIONAL LABORATORY
Oak Ridge, Tennessee 37831-6285
operated by
MARTIN MARIETTA ENERGY SYSTEMS, INC.,
for the
U.S. DEPARTMENT OF ENERGY
under contract DE-AC05-84OR21400

MARTIN MARIETTA ENERGY SYSTEMS LIBRARIES

3 4456 0316645 5

CONTENTS

1. INTRODUCTION 1

2. EXPERIMENTAL PROGRAM 3

3. PROCUREMENT PROCESS FOR RL TAXIWAY MARKER LIGHTS 5

3.1 TECHNICAL SPECIFICATIONS 5
3.2 COMPETITIVE PROCUREMENT 6
3.3 PROPOSAL SUBMISSION AND EVALUATION 7
3.4 PROTOTYPE SUBMISSION AND SELECTION 7

4. MANUFACTURE OF RL LIGHT UNITS 9

4.1 MANUFACTURING METHODS AND QUALITY CONTROL 9
4.2 ORNL EVALUATION OF ASSEMBLED LIGHT UNITS 9

5. FIELD INSTALLATION 11

6. SAFETY AND LICENSING ISSUES 13

6.1 DOSE TO PERSONNEL 13
6.2 DOSE THROUGH PYREX TUBE 14

7. REFERENCES 17

Appendix A SPECIFICATIONS FOR TRITIUM RADIOLUMINESCENT LIGHTED AIRFIELD SIGNAGE 19

Appendix B PERSONNEL DOSE CALCULATIONS 27

Appendix C SECURITY PLAN 61

Appendix D SAFETY PLAN 71

Appendix E INSTRUCTION MANUAL FOR INSTALLING TRITIUM RADIOLUMINESCENT AIRFIELD SINAGE AT ALBERT WHITTED MUNICIPAL AIRPORT ST. PETERSBURG, FLORIDA 79

FIGURES

1. Four-tube tritium RL light signs with component parts identified 8

2. Four-tube tritium RL light sign 86

3. Typical RL light signage unit assembly 87

4. Emergency shipping container 91

5. Airfield signage layout 96

6. RL light signage unit assembly and installation, showing special tool required 97

TABLES

1. Light output of single RL Light tubes with varying ratios of blue to green phosphor 3

2. Light output for taxiway markers with 20/20 ratio green/blue phosphor 4

3. Schedule of activities and procurement plan for airfield sinage for Albert Whitted Airport, St. Petersburg, Florida 6

1. INTRODUCTION

In 1980, the U. S. Air Force (USAF) Engineering and Services Center at Tyndall Air Force Base, Florida, requested that the Radioisotope Technology Group of the Chemical Technology Division at Oak Ridge National Laboratory (ORNL) develop large-scale, tritium-powered, radioluminescent (RL) airfield lighting systems. The RL lighting systems possess the advantages of being portable, requiring no electrical power source, having a long shelf life, and being unaffected by environmental extremes. These characteristics make the RL system well-suited for harsh environments where the cost of electrical power production is high and traditional incandescent airfield lighting systems are difficult to maintain. Additionally, the system is well suited for environments where corrosion of wiring and water entry into wiring systems make them difficult to maintain. In 1985, the State of Florida, Department of Transportation (DOT), through contract with the City of St. Petersburg, Florida became a participant in the program to develop RL lighting systems for use in small commercial airports. The director of the Albert Whitted Airport was named the program manager for the state funded work.

Radioluminescent lighting is typically a large-surface-area, low-intensity light source that operates 100% of the time. The RL light sources gradually decrease in brightness over time, so periodic replacement (every 6 to 8 years) is necessary. RL lighting functions best in low ambient light, which provides the high contrast ratios necessary for successful use of these devices. Previous work with the USAF was primarily devoted to research and development for the large scale light sources necessary for RL airfield lighting. The Florida work concentrated on improving taxiway and runway marker systems, design of runway marker units, development of specifications, and the purchase of runway marker units for use and evaluation at Albert Whitted Airport in St. Petersburg. Experiments were conducted on phosphors and phosphor mixtures to develop a brighter blue light for taxiway use.

A specification was written by ORNL, based on development of the ORNL RL airfield light panel and lessons learned in the procurement of lights for a USAF airfield lighting system.[1] The procurement process was then begun for the purchase of taxiway markers to be installed at the Albert Whitted Airport in St. Petersburg. Procurement was conducted as a competitive bid to encourage the commercial vendors to provide their best designs at the lowest price. Evaluation of prototypes submitted by vendors was performed by ORNL, and, based on the findings of the evaluation, the procurement contract was awarded.

Since the City of St. Petersburg required a license to install the units on the Albert Whitted Airport, numerous calculations were made to demonstrate the safety of the system to the Florida Department of Health and to obtain the license. A discussion of these calculations is presented in Appendix B of this report.

2. EXPERIMENTAL PROGRAM

A field test of an RL airfield lighting system for the Federal Aviation Administration was conducted in St. Petersburg, Florida in August 1984. During this test, blue taxiway markers were deployed. A suggestion to improve brightness while maintaining some blue character to the light was suggested by State of Florida DOT representatives. This concept was tested in 1985. A mixture of 15% green phosphor and 85% blue phosphor was prepared and coated on the standard ORNL RL light source tube. Blue coloring was judged to be sufficient, and the State of Florida supplied funds for the fabrication and deployment of 90 blue/green taxiway markers.

Tubes coated with a mixture of green and blue phosphor (15% green) were made and subjectively compared to the tubes coated with 100% blue phosphor. In color, the mixed phosphor tube was blue-white and had a marked increase in perceivable light. Several of the 15% green lights were made and tested on a dark, rainy, foggy night. A realistic threshold of detection with the markers indicated solid visual acquisition at approximately 450 ft with three two-tube fixtures spaced 100 ft apart. Observations were made by four individuals (age 30 to 60 years) to determine the threshold distance. The next set of experiments compared the output for several ratios of the blue/green phosphor mixtures. The light output of tubes containing these phosphor mixtures is presented in Table 1. The tubes were identical in tritium loading and physical size so that meaningful comparisons could be made.

Table 1. Light output of single RL light tubes with varying ratios of blue to green phosphor

Phosphor mixture	Average light output for a single tube (cd)
10.0% green, 90.0% blue	0.0028
12.0% green, 88.0% blue	0.0043
13.5% green, 86.5% blue	0.0041
15.0% green, 85.0% blue	0.0048
18.0% green, 82.0% blue	0.0052

Additional tubes were made using 21.0% and 24.0% green phosphor, but no appreciable increase in light output was obtained, and the color was not sufficiently blue (i.e. too white) to be useful as a taxiway marker. The decision was made that future markers would contain 18 to 20% green phosphor. The taxiway fixtures and a 15- x 45-in. information sign showing the number 36 and an arrow were again tested using ORNL observers and a pilot-observer with essentially the same results as reported above. At the taxiing speed of a general aviation aircraft (15 mph), the 400 to 450 ft distance at which the markers and the sign were observable and readable is more than sufficient.

Ten taxiway markers were assembled for a demonstration at Albert Whitted Airport in April 1986. The units included eight two-tube and two three-tube light wands (a wand is a fixture with a tube or tubes in a circular configuration). The phosphor mixture used was 20.0% green and 80.0% blue. The measured light output of the ten taxiway markers in given in Table 2.

Table 2. Light output for taxiway markers with 20/80 ratio green/blue phosphor

Unit	Light output (cd)
Two-tube units	
1	0.00614
2	0.00627
3	0.00614
4	0.00595
5	0.00614
6	0.00620
7	0.00614
8	0.00494
Three-tube units	
9	0.00766
10	0.00766

3. PROCUREMENT PROCESS FOR RL TAXIWAY MARKER LIGHTS

3.1 TECHNICAL SPECIFICATIONS

Technical specifications for the RL taxiway marker lights were modeled after those specifications developed for the first large, commercial procurement of RL lights which were purchased for the USAF. This procurement differed from the USAF procurement in that the selection of the successful bidder was based on manufacturers' claims—subject to submission of a prototype or "first article" to ORNL for evaluation. The USAF procurement process purchased a prototype from each interested bidder, which was then evaluated to determine the best offer. The procurement was done in this manner to encourage manufacturers to place their best efforts into the designs and exceed the minimums set forth in the technical specifications. In this procurement, if the prototype met the claimed standards, then the bid was to be accepted. If the submitted prototype did not meet the claimed standards, the contract was then passed on to the next best bidder.

Specifications for RL light units (Appendix A) included requirements for brightness, luminous intensity, light distribution, package integrity, activity level maximums (curies), and quality control testing. The minimally acceptable unit was required to have a luminous intensity of 0.39 cd at 0° and 0.13 cd at 70° from the front (head-on) direction. The tube surface brightness was required to be 1 ft-lambert or greater. Package integrity was to meet ANSI-N540 (1975)[2] Class 4 requirements, except for the impact test, which was upgraded to 22 drops from 2 m. Activity level maximums were required to be less than 1000 Ci to ensure the use of Type A packaging.[3] The alternative to Type A packaging is Type B packaging, the weight and bulk of which are sufficient to preclude any simple deployment or transportation mode. At the vendor's facility, quality control (QC) testing was to include well-documented, 100% testing for tritium leakage and photometric output.

Additionally, the specifications required tests to ensure that tubes were properly stress relieved and well mounted in the package and that maximum precautions were taken to eliminate and preclude introduction of water into the tritium systems and the lights. Specifications of phosphors were written to ensure that phosphors of known characteristics would be used. The specification for the phosphor was subsequently changed after the original submission to the manufacturers to change the color to meet Federal Aviation Administration (FAA) requirements. This did cause a small delay in schedule but did not result in any additional cost to the program. The delay in delivery was allowed to permit the manufacturer time to obtain a sufficient quantity of the required phosphor.

Items not specified were weight, volume, source geometry, directionality, and packaging materials. These unspecified items were intended to give the manufacturers maximum latitude to improve upon existing designs and to reduce manufacturing costs.

3.2 COMPETITIVE PROCUREMENT

This procurement was conducted as a competitive bid with purchase and evaluation of prototypes performed by ORNL prior to final vendor selection. The U.S. Department of Energy (DOE) provided the required tritium gas for the light units, but tritium use was considered a cost in the weighted vendor selection formula. A schedule was developed for the activities necessary to complete delivery of the lights units by September 30, 1987. The schedule is shown in Table 3. This schedule was subsequently adjusted for reasons stated in the text above.

Table 3. Schedule of activities and procurement plan for airfield signage for Albert Whitted Airport, St. Petersburg, Florida

DATE (1987)	ACTIVITY
January 23	Meet with MMES[a] purchasing
February 4	Initiate licensing activity
February 9	Final diagram of airfield to ORNL
February 11	Complete specification package and purchase requisition
February 13	Review of solicitation, offer, and acceptance
February 18	Transmit bid package to sellers
March 19	Bids due from sellers
March 24	Evaluate bids and award contract
May 8	First article (prototype) due to ORNL
May 18	First article evaluation completed
June 26	Receipt of as-built drawings
August 31	Licensing activity complete
September 4	Delivery of signs to St. Petersburg
September 30	Installation of signs complete

[a]MMES = Martin Marietta Energy Systems

3.3 PROPOSAL SUBMISSION AND EVALUATION

Proposals for supplying the taxiway signage for Albert Whitted Airport were received from four potential suppliers. All proposals arrived in a timely manner, and the winning submission was invited to send a prototype for evaluation.

3.4 PROTOTYPE SUBMISSION AND SELECTION

The successful bidder indicated that the specification could be met using only 36% of the total tritium anticipated to be used by the next lowest bidder. This indication was a radical departure from anything experienced so far in the manufacture of tritium RL lights. The vendor submitted the "first article" for evaluation and approval on May 8, 1987; however, the unit failed to meet specifications and the bid was rejected. The second lowest bidder was then contacted and requested to submit a prototype. The schedule above was adjusted to allow the fabrication of the prototype and its submission to ORNL for evaluation. The unit, with component parts identified, is shown in Fig. 1.

The prototype was subjected to the ANSI-N540 (1975)[2] test requirements (as modified by ORNL to include a more strict requirement for the drop test). The unit passed the nonleakage requirements of the testing; however, the unit developed cracks in the casing around the legend holder strips after 8 to 10 of the required 22, 2-m free drop tests. The lights were not affected by the remainder of the testing, but the integrity of this unit is less than the units procured for the USAF[1] due to the increase in front surface area.

ORNL-DWG 88-8446

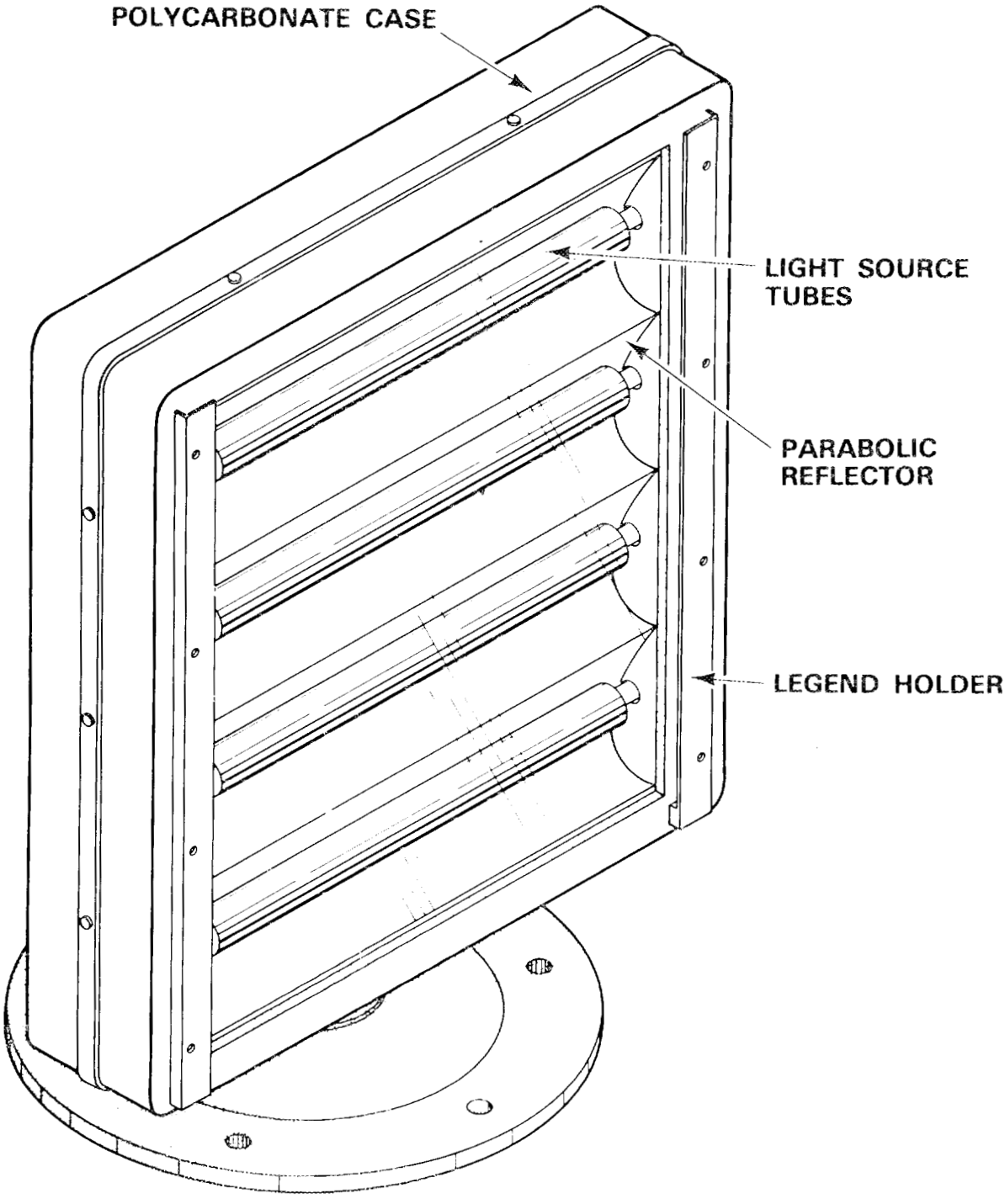

Fig. 1. Four tube tritium RL light signs with component parts identified.

4. MANUFACTURE OF RL LIGHT UNITS

4.1 MANUFACTURING METHODS AND QUALITY CONTROL

Part of the bid award package included the criterion that ORNL quality control methods would be used and documented for supplied light units. The fundamental issue in using these methods was testing of 100% of the units for physical integrity and photometric output. The test methods required inspection and pressure testing of the unfilled light source tubes. Testing of the filled tubes involved thermal shock of the light sources, followed by a 24-h water soak test and liquid scintillation counting of the soak solutions. Extensive documentation was provided during an on-site inspection to ensure ORNL that the quality control program was 100% effective and that the desired methods were used.

Photometric measurements were made on all light source tubes and assembled units. None of the tubes fabricated for this project failed to meet the surface brightness requirement of 1 ft-lambert. Frequency distribution for the luminous intensity of the light fixtures indicated a Gaussian distribution with a standard deviation of 0.050 cd/m^2. All units met the requirements of the specification.

4.2 ORNL EVALUATION OF ASSEMBLED LIGHT UNITS

Two production units of the light package were received at ORNL for testing. These two units were subjected to the ANSI-N540 testing previously described, with only minimal damage to the units. The two units received additional testing to determine whether they qualified as Type A shipping packages.[3] These tests included a water spray, free drop (1.2 m), compression, penetration (6 kg from 1 m), free drop (9.0 m), and penetration (6 kg from 1.7 m). Test results from these packages demonstrated that they met or exceeded all requirements for Type A packaging except the 30-ft free-fall requirement. This requirement was met by placing packing material (shredded paper) into the shipping boxes to provide shock absorbing capability in the free-fall.

Photometric measurements were obtained for each lighting unit. All of the units met the requirements of the specification.

All packages were smeared for transferrable activity prior to shipment, and no indication of tritium leakage was found.

Angular distribution of light output (horizontal and vertical) measured for the USAF lights indicated that horizontal distribution was typical of a flat-plate reflector and that vertical distribution was highly influenced by the parabolic reflector and differed significantly (20%) at an angle of 20°. Vertical distribution was adequate since the aircraft are on the ground when using these signs and the luminous intensity changes very little over a $\pm$ 5° arc. These measurements were not repeated for the RL light signs since they are so similar to the USAF lights.

5. FIELD INSTALLATION

The RL taxiway marker units were shipped to Albert Whitted Airport in St. Petersburg, Florida on February 24, 1989 and were installed on the airport during the next week. The units have been on test and evaluation by the State of Florida DOT and the City of St. Petersburg since that time.

6. SAFETY AND LICENSING ISSUES

6.1 DOSE TO PERSONNEL

The use of any radioactive material in the State of Florida requires approval and granting of a license by the Florida Department of Health and Rehabilitative Services, Office of Radiation Control. The actual license for the use of these devices was obtained by the City of St. Petersburg for the Albert Whitted Airport. In general, approval and granting of a license requires reviewing of the application, source integrity, training materials, security plan, safety plan, levels of surveillance, and evaluation of the potential danger to airport personnel and to the general public.

Realistic accident scenarios involving doses from accidental release of tritium were examined. The scenarios which were examined were as follows:

1. warehouse fire,
2. theft and subsequent indoor release,
3. warehouse accident,
4. outdoor or runway accident,
5. release due to diffusion through tubes during storage, and
6. effects of absorption by rainfall during a release.

These scenarios were evaluated to determine the maximum received dosage (50-year committed dose) to personnel from acute release of activity. Actual dose calculations are included in Appendix B. The worst personnel dose was calculated for an accident scenario in which a panel was taken indoors and all four tubes in the panel were broken. The 50-year committed dose was 1.17 rem (whole body). The maximum dose to any organ in the body was 2.32 rem to the Res lymph* system. The dose to the Res lymph system is equivalent to approximately one-half the annual dose allowed a radiation worker (5.0 rem/year maximum). The dose to the whole body is approximately equivalent to 25% of the accumulated annual dose allowed a radiation worker, or approximately 12 chest X rays.

*reticuloendothial lymph

The calculations are very conservative in that they assume that the individual will remain in the exact area of the release for the entire period of the release (calculated to be 2.3 h). The conclusion drawn from this scenario is that the light should not be used as decor for a room and security for the lights should preclude casual removal by individuals. These concerns are addressed in the RL light safety and security plans for the Albert Whitted Airport.

Prior to deployment at the airfield, a security plan (Appendix C), a safety plan (Appendix D), and an instruction manual (Appendix E) were written for use by Albert Whitted personnel.

6.2 DIFFUSION THROUGH PYREX TUBE

Another exposure scenario studied at ORNL involved chronic exposure to tritium released from stored units by diffusion through the pyrex glass and device casing. Work was conducted at ORNL to establish upper limits for these RL light source tubes. Calculation of a diffusion rate based on published data results in a diffusion rate of 12 μCi per year per device (four-tube, 664-Ci RL light). The main source of error in this calculation is that most tritium diffusion rates are measured at about 700°C. Extrapolation of these data back to ambient temperatures may introduce significant error. Experimental work at ORNL has established that the upper limit for diffusion out of the tube itself is less than 1.0 μCi of tritium per year per device. This results in an annual rate of <0.03 mCi per year for 30 devices. The lower limit of diffusion is difficult to determine with precision since the scintillation solution counting is limited to approximately 9 counts/min (background), and the samples taken in these experiments were only counting between 9 and 10 counts/min (<130 Bq/L). The determined permeation rates from back diffusion are extremely conservative because the control samples averaged >120 Bq/L and the actual diffusion samples averaged 125 Bq/L. This calculation assumed that all of the activity measured for the diffusion samples (125 Bq/L) resulted from diffusion. In fact, at least 120 Bq/L appear to be accounted for by environmental tritium.

Also to be considered is the fact that these diffusion rates are for the tubes themselves and not for the assembled devices—the face of which represent another barrier between the tritium and the environment. No smears taken of undamaged light units (smeared before and after each shipment) at ORNL have ever indicated anything other than background levels of tritium. These very low diffusion rates are not measurable with tritium air monitors. One method that could be used for monitoring changes in the tritium diffusion rate would be to place polystyrene smear pads in air-permeable vials in the storage area. These smear pads could then be counted (liquid scintillation counting) to give an

integrated exposure record for the storage. Shipment of these samples to a counting facility on a biannual basis would offer sufficient monitoring to eliminate chronic exposure to personnel when light units are to be stored for a long period of time.

7. REFERENCES

1. Tompkins, J. A., K. W. Haff, and F. J. Schultz, *Radioluminescent (RL) Airfield Lighting System Program, Annual Report: October 1, 1986-September 30, 1987*, ORNL/TM-11503, Oak Ridge National Laboratory, Oak Ridge, Tennessee, 1990.

2. ANSI-N540, *Classification of Radioactive Self-Luminous Light Sources*, American National Standards Institute, New York, 1975.

3. *Code of Federal Regulations*, Title 49, Parts 173.465 and 173.466, 1989.

Appendix A

SPECIFICATIONS FOR TRITIUM RADIOLUMINESCENT LIGHTED AIRFIELD SIGNAGE

SPECIFICATION NO. AIRSIGN 1.0

SPECIFICATIONS FOR TRITIUM RADIOLUMINESCENT LIGHTED AIRFIELD SIGNAGE

Purpose

This specification describes tritium radioluminescent (RL) lighted airfield signage.

Definitions

The following definitions apply for this specification:

a. Tube - a phosphor-coated, tritium-filled, light source.

b. Fixture - an array of tubes. It includes the outer protective covers, mounting brackets, and supports for the tubes.

c. Mounting Device - is a device used to mount and support the light fixture on an airfield.

d. Legend Mask - is a clear plastic covering placed over the face of the lighted background. It contains the number, letter, or arrow as described in paragraph g, General Requirements.

General Requirements

The fixture and the fixture mounting device will have the following characteristics:

a. The fixture is to be unidirectional and shall have an appropriate reflector behind the tritium RL light tubes. It may have a clear lens cover on each lighted face.

b. The sign mounting device shall be equipped with a frangible coupling(s) on the bottom end. The coupling(s) shall meet Federal Aviation Administration (FAA) specifications and be listed in FAA circular 150/5345-1. See attached drawing (Attachment I).*

*not included in this report

c. Neither the fixture nor the mounting device shall contain ferrous metal parts. All metal parts will be either aluminum, titanium, or brass.

d. A single fixture shall contain no more than 1000 Ci. [This is to allow shipment in Type A packages. (see paragraph j. of this section)]

e. The fixture and its mounting device shall be a minimum 18 in. high and maximum of 30 in. above ground level. All fixtures shall be the same height.

f. All test data, drawings, etc. required for the Company* to obtain a site-specific license for the State of Florida will be furnished by the Seller unless the device is generally licensed. If the device is generally licensed, the Seller is solely responsible for obtaining this license and providing documentation of this license to the Company.

g. The fixtures shall be rectangular in shape, with back-lighted numerals, letters, or arrows. Each number, letter, or arrow will be a flat black color and outlined with a 1/4-in. wide yellow reflective tape, as shown in the following sketch.† The tape shall be Scotchlite‡ "Flat Top" Wide Angle Reflective Sheeting Engineer Grade (Attachment II),† or approved equivalent.

   The maximum dimension of any fixture, exclusive of mounting devices, shall be 18 in. The dimensional requirements will be in compliance with sign size 1 of FAA circulars 150/5345-44. The legend mask for each sign will be field replaceable.

h. The outer clear cover shall be made of a clear polycarbonate such as Lexan,§ ARC‖ coated in accordance with the attached literature (Attachment III)† to resist moisture absorption and abrasion. The light loss through the outer cover shall be no more than 10% of the initial light output.

---

*Martin-Marietta Energy Systems, Inc. - Oak Ridge National Laboratory
†Not included in this report
‡Trademark of the 3M Company
§Trademark of the General Electric Company
‖Trademark of the Dow-Corning Company

i. The fixtures will be serially numbered and labeled in accordance with the U.S. Nuclear Regulatory Commission (NRC) or state requirements and shall meet all NRC and/or Florida state licensing requirements.

j. The fixtures will be labeled and packaged for shipment in nonreturnable, Type A packages in accordance with U.S. Department of Transportation regulations, Code of Federal Regulations, Title 49 (see also paragraph d.).

k. The non-illuminated portion of the sign shall be painted safety yellow. (Enamel paint, Aviation yellow, per Federal Standard 595, Table X, No. 13538.)

Light Output Requirements

NOTE: Measurements to demonstrate light output requirements are to be made 30 d after initial loading of tubes with tritium.

1. The brightness of the tube surface shall be measured for each tube. This brightness shall be a minimum of 1.0 ft-lamberts as measured with a recently calibrated Minolta 1° luminescent meter or an equal approved by the Company. The average surface brightness of the illuminated area of the signage will be 1.0 ft-lamberts.

2. The luminous intensity of the fixture shall be measured at 0 and 70° angles from the frontal, head-on direction from a distance of at least 10 times the largest dimension of the illuminated area. The minimum luminous intensity will be 0.39 and 0.13 cd of the illuminated area (11.8 in. x 15 in.) without the legend mask, respectively, as measured with a recently calibrated EG&G Model 550 photometer or an equal approved by the Company. Light output between these two measured points will be no less than a linear proportion.

Testing Requirements

The following tests shall be performed by the Seller on dummy (nonradioactive) fixtures. Documentation of the test results is required to be submitted to the Company.

1. American National Standard N540: Classification of Radioactive Self-Luminous Light Sources.

- Test level 4 shall be performed for the discoloration, temperature, thermal shock, pressure (reduced), vibration, and immersion tests.

- The impact test will be a special test consisting of a free fall on to a steel plate twenty-two (22) times from a height of two (2) m.

2. Rough Handling Test (ASTM-D775, Drop Test for Shipping Containers). The purpose of this test is to determine the light's capability to withstand rough handling and the ability of the envelope to protect the tritium-filled glass tubes. This test will apply to the light unit itself, not to the shipping package.

3. Abrasion Test (ASTM-D658, Test for Abrasion Resistance of Coatings of Paint, Varnish, Lacquer, and Related Products with the Abrasion Tester). The clear covering of the light shall be capable of protecting the light against adverse effects on its surface. No light loss through the protective outer surface of the light will be allowed as a result of this test.

4. Temperature and Humidity Cycle Test. This test shall be conducted in accordance with Military Standard 810C, "Environmental Test Methods," Method 518.1 "Temperature-Humidity-Altitude." The altitude portion of the test will not be conducted. The lights shall be subjected to the cycle of tests at 70°C (160°F) at 69% humidity to -54°C (-65°F) at 0% humidity.

5. The light unit shall be demonstrated to be leak tight at a pressure of 5 psig in water.

Phosphor Requirements

The phosphors used in the tritium radioluminescent lighted airfield signage will be the following phosphor:

GTE Sylvania 1260

Any substitution of this phosphor will be made only with approval, in writing, by the Company. Better, more-efficient phosphors are always desirable; however, if one is to be substituted, the Seller must submit samples and sufficient data to the Company to demonstrate the superiority of the phosphor to be substituted. The Company's decision will be made within five working days after receipt of the request and adequate data.

Construction Materials

Construction materials are limited only in that all materials must meet the structural integrity requirements of the testing program without loss of tritium or breakage of the tubes. There will be no ferrous metals allowed in construction of the lights. Metal parts will be limited to aluminum and its alloys, titanium, or brass.

Quality Assurance During Manufacturing

The following quality assurance (QA) checks will be made during the manufacture of the tritium RL taxiway marker lights. The enclosed Oak Ridge National Laboratory (ORNL) procedures may be used, or the Seller may submit his own procedures for approval by the Company. The Seller shall submit procedures to the Company before beginning manufacturing. The Company will approve the procedures within five days after receipt.*

1. Thermal Shock Test of As-Received Glass Tubes (ORNL Procedure No. IP-204A).
   100% testing requirement

2. Internal Pressure Test of Glass Tubes (ORNL Procedure No. IP-204D).
   100% testing requirement

3. Phosphor Coating Adherence Check (ORNL Procedure No. IP-204F).
   100% testing requirement

4. Vacuum Drying of Tubes and Storage of Phosphor-Coated Tubes (Steps 2 through 5 of ORNL Procedure No. IP-204G - Tritium Filling Tube Neck-Down.)
   100% testing requirement

5. Water Check on Tritium Gas. Tritium gas loaded into the RL taxiway lights shall not contain more than 0.04% total of water and tritiated water. This percentage shall either be determined by mass spectrographic analysis by the supplier of the gas or tests made at the Seller's plant.

6. Oil-Free Tritium. The Seller shall certify that tritium loaded into the RL taxiway lights is oil-free.

*ORNL Procedures are not included in this report.

7. Thermal Shock Test of Tritium-Filled Tubes. ORNL Procedure No IP-204 will be used or seller may substitute the procedure as described for Test Level 4, Thermal Shock Test in ANSI N540, Section 7.4.
   100% testing requirement

8. Leak Check of Filled Light Source Tubes by H_2O Leach. This procedure will be performed in accordance with ANSI N540, Section 8.3.2.
   100% testing requirement

9. Light Measurement of Completed Tubes. The surface brightness of each tube and the light output for each fixture must be measured. Since some light decay occurs during the first 30 d after initial manufacture, a light measurement will be made on each tube (prior to assembly into a light fixture) on the 30th d after manufacture. This light measurement must be equal to or greater than that specified in Light Output Requirements above. 100% testing is required. ORNL Procedure No. IP-204J may be used. This procedure is for an EG&G Model 550 photometer. An approved equivalent is acceptable.

Performance and Acceptance Tests to be Performed by the Company

The Company reserves the right to visit the Seller's plant during the manufacturing process to observe and to assure that work quality and testing are being performed as specified herein.

The Company also will perform, at its facilities, acceptance testing. These will include:

1. visual inspection of the quality of workmanship of the completed units,

2. leak tests,

3. light measurements, and

4. review of all certification documentation.

Tests 2 and 3 shall be performed in accordance with the procedures set forth in the previous section, Quality Assurance During Manufacturing.

Appendix B

PERSONNEL DOSE CALCULATIONS

The following personnel dose calculations are included in this appendix:

1. Calculation of Dose from HTO in Tritium Light Panel in Postulated Storage Facility Fire Accident Scenario

2. Calculation of Dose from HTO in Tritium Light Panel in Postulated Indoor Accident Scenario

3. Calculation of Dose from HTO in Postulated Warehouse Accident Scenario

4. Calculation of Dose from HTO in Tritium Light Panel in Postulated Outdoor or Runway/Taxiway Accident Scenario

5. Release of Tritium through Glass Tubes from Radioluminescent Lights

6. Dose to an Individual from Tritium released by Diffusion through Glass Tubes while Lights are in Storage

7. Calculation of Dose from HTO in Tritium Light Panel in Postulated Outdoor or Runway/Taxiway Accident Scenario that Occurs in a Rainstorm

8. Computer Program Used to Calculate Downwind Tritium Concentration after Release of Material from Thirty Taxiway or Runway Marker Signs in a Fire Situation

9. Computer Program Used to Calculate Downwind Tritium Concentration after Release of Material from Three Taxiway or Runway Marker Signs at Ground Level

Calculation of Dose from HTO in Tritium Light Panel in Postulated Storage Facility Fire Accident Scenario

The internal dosimetry of an intake of tritiated water (HTO or TTO) associated with a postulated storage facility fire with subsequent release of tritium has been assessed. The assessment is highly speculative and unquestionably represents a worst-case situation. Actual doses are expected to be much less than the calculated value.

The following assumptions apply to this assessment:

1. The total tritium activity per sign is 664 Ci. The maximum number of signs at any one storage location is 30 and all tubes are broken for a release of 19,920 Ci total. There are four tubes in each sign, which contain 166 Ci a piece (i.e., each sign contains 664 Ci).

2. The concentration of tritium in the atmosphere is 2.31×10^{-4} $\mu Ci/cm^3$ that occurs at a distance of 500.0 m downwind from the release point and results from diffusion of the tritium upon breakage of all the tubes in the 30 signs. The release is assumed to occur over a 1-h period. (The computer program used in making the calculation of this concentration are included in this appendix. The calculations are made using the Gaussian diffusion plume model presented in *Meteorology and Atomic Energy 1968*, edited by David H. Slade of the Air Resources Laboratories.)

3. The plume height of the fire (release height) is assumed to be 50.0 m. (This is consistent with the reported plume height of the storage facility fire in Alaska in the fall of 1987.)*

4. The wind velocity is assumed to be 3.0 mph, which results in an atmospheric stability condition "C"— moderately unstable.

5. The fraction of the released tritium present as HTO or tritium oxide (TTO) is 100%, which assumes that all the tritium is converted to the oxide form as a result of the fire.

---

*Jensen, G. A. and J. B. Martin, *Investigation of Fire at Council, Alaska: A Release of Approximately 3000 Curies of Tritium*, Letter Report, Pacific Northwest Laboratory, February 1988.

6. The standard man occupational breathing rate of 9.6×10^3 L in the occupational 8-h day (3.33×10^2) applies (i.e., no heavy breathing occurs).

7. The accuracy of the calculation is probably +0, -100% but cannot be fully assessed without a meaningful experimental study of the situation.

With these assumptions and data the quantity (microcuries) of tritium inhaled as HTO or TTO can be calculated.

Therefore,

$$QI = (C_a)(fw)(BR)(t),$$

where

QI = quantity inhaled (μCi),

C_a = log mean concentration ($\mu Ci/cm^3$)

fw = fraction of tritium present as HTO or TTO (1.0),

BR = breathing rate (cm^3/s),

t = exposure time (s).

Therefore,

$$QI = (2.31 \times 10^{-4})(1.0)(3.33 \times 10^2)(3600),$$

$$= 2.77 \times 10^2\ \mu Ci.$$

The calculation of 50-year committed dose is made using tabulated values from NUREG/CR-0150 (ORNL/NUREG/TM-190), *Estimates of Internal Dose Equivalent to 22 Target Organs for Radionuclides Occurring in Routine Releases from Nuclear Fuel Facilities,* by G. G. Killough, D. E. Dunning, Jr., S. R. Bernard, and J. C. Pleasant, June 1978. The Inhalation Dose Conversion Factor (IDCF) also accounts for absorption of HTO or TTO through the skin. For every microcurie inhaled, 0.5 μCi are absorbed through the skin.

$$D(50) = (IDCF)(QI)$$

where

D(50) = 50-year committed dose (rem),

IDCF = inhalation dose conversion factor (rem/μCi),

QI = quantity inhaled (μCi).

Maximum Dose to any organ in the body is to the Res lymph:

$$D(50) = (2.48 \times 10^{-4})(2.77 \times 10^{2}),$$

$$= 0.069 \text{ rem or } 69 \text{ mrem.}$$

The dose to the total body is

$$D(50) = (1.25 \times 10^{-4})(2.77 \times 10^{2}),$$

$$= 0.035 \text{ rem or } 35 \text{ mrem.}$$

The Inhalation Dose Conversion Factors for other areas of the body are presented below:

ORGAN	IDCF (rem/μCi inhaled)
Lungs	1.25×10^{-4}
Res lymph	2.48×10^{-4}
Total body	1.25×10^{-4}
Liver	1.24×10^{-4}
Bone	5.57×10^{-5}
Red marrow	1.24×10^{-4}
Endosteal cells	9.85×10^{-5}
Thyroid	1.24×10^{-4}
Testes	1.25×10^{-4}

These dose estimates assume that there is no oxidation of HT or TT to HTO or TTO during the exposure and that internal exposure from HT or TT is negligible. [The ratio of dose rate in a cloud of HT compared to the dose rate of HTO is 1×10^{-4} as discussed by Pinson and Langham, Physiology and Toxicology of Tritium in Man, *J. Appl. Physiol.*, **10**, 108, (1957).]

The dose to the Res lymph system is equivalent to 1.4% of the annual dose allowed a radiation worker. The dose to the total body is approximately equivalent to 0.7% of the annual dose allowed a radiation worker and approximately equivalent to one chest X ray.

This calculation is very conservative in that it assumes that the individual will remain in the exact area of maximum concentration for the entire 1-h period of the release.

Calculation of Dose from HTO in Tritium Light Panel in Postulated Indoor Accident Scenario

The internal dosimetry of an intake of HTO associated with a postulated indoor accident and subsequent breakage of a tritium runway or taxiway marker sign has been assessed. The assessment is highly speculative and unquestionably represents a worst-case situation. Actual doses are expected to be much less than the calculated value.

The following assumptions apply to this assessment:

1. The total tritium activity is 664 Ci, and all tubes are broken.

2. The instantaneous concentration of tritium in the room is 21.7 $\mu Ci/cm^3$ resulting from diffusion of the tritium upon breakage of all the tubes.

3. The room size is 9 x 15 x 8 ft (much smaller than most work areas in which the units are likely to be stored or assembled).

4. The air circulation from all sources is equivalent to one change per hour.

5. The fraction of the released tritium present as HTO or TTO is 0.04%, which is twice the amount as is shown in a typical tritium product analysis. No oxidation of HT or TT takes place. The absorption of HT or TT into water or alcohol present is negligible.

6. The standard man occupational breathing rate of 9.6×10^3 L in the occupational 8-h day (3.33×10^2 cm^3/s) applies (i.e., no heavy breathing occurs).

7. Once the concentration of tritium in the room has been reduced to 10% of the initial concentration, it is assumed the room has been cleared of people and/or the tritium.

8. No factors are applied to compensate for more than one person being in the room (i.e., the movement and breathing of a large number of people would tend to disperse the material and lower the concentration).

9. The accuracy of the calculation is probably +0, -100% but cannot be fully assessed without a meaningful experimental study of the situation.

With these assumptions and data we can calculate the quantity (microcuries) of tritium inhaled as HTO or TTO can be calculated.

$$QI = (C_a)(fw)(BR)(t),$$

where

QI = quantity inhaled (μCi),

C_a = total tritium concentration ($\mu Ci/cm^3$), i.e., average room concentration,

fw = fraction of the tritium present as HTO or TTO,

BR = breathing rate during the exposure (cm^3/s),

t = exposure time (s).

The time required to achieve a concentration of 10% of the initial concentration is calculated by the following relationship:

$$\ln C_t - \ln C_0 = (-F/V_m)(t),$$

where

C_t = concentration at time t ($\mu Ci/cm^3$),

C_0 = initial concentration ($\mu Ci/cm^3$),

F = flow rate in room (cm^3/s),

V_m = mean volume of room (cm^3),

t = time (s).

Since C_t is 0.1 C_0, the time required for this condition to occur can be calculated as follows:

$$t = (V_m)(\ln 0.1)/(-F).$$

$$C_0 = QR/V_m,$$

where

QR = quantity released (μCi),

V_m = room volume (cm^3).

Therefore,

$$C_0 = 6.64 \times 10^8/3.06 \times 10^7,$$

$$= 21.7\ \mu Ci/cm^3,$$

and

$$C_t = 0.1\ C_0 = 2.17\ \mu Ci/cm^3,$$

and

$$F = 3.06 \times 10^7/3.6 \times 10^3 = 8.5 \times 10^3\ cm^3/s.$$

and

$$t = (3.06 \times 10^7)(\ln 0.1)/(-8.5 \times 10^3),$$

$$= 8.284 \times 10^3\ s\ (2.3\text{-}h).$$

The log mean concentration is obtained by the following equation:

$$C_a = (C_0 - C_t)/[\ln (C_0/C_t)],$$

$$= (21.7 - 2.17)/\ln 10,$$

$$= 8.48\ \mu Ci/cm^3.$$

Therefore,

$$QI = (C_a)(fw)(BR)(t),$$

where

QI = quantity inhaled (μCi),

C_a = log mean concentration (μCi/cm^3),

fw = fraction of tritium present as HTO or TTO,

BR = breathing rate (cm^3/s),

t = exposure time (s).

Therefore,

$$QI = (8.48)(4.0 \times 10^{-4})(3.33 \times 10^{2})(8.284 \times 10^{3}),$$

$$= 9.357 \times 10^{3}\ \mu\text{Ci}.$$

The calculation of 50-year committed dose is made using tabulated values from NUREG/CR-0150 (ORNL/NUREG/TM-190), *Estimates of Internal Dose Equivalent to 22 Target Organs for Radionuclides Occurring in Routine Releases from Nuclear Fuel Facilities,* by G. G. Killough, D. E. Dunning, Jr., S. R. Bernard, and J. C. Pleasant, June 1978. The Inhalation Dose Conversion Factor (IDCF) also accounts for absorption of HTO or TTO through the skin. For every microcurie inhaled 0.5 μCi are absorbed through the skin.

Thus

$$D(50) = (IDCF)(QI),$$

where

D(50) = 50-year committed dose (rem),

IDCF = inhalation dose conversion factor (rem/μCi),

QI = quantity inhaled (μCi).

Maximum dose any organ in the body is to the Res lymph:

$$D(50) = (2.48 \times 10^{-4})(9.357 \times 10^{3}),$$

$$= 2.32 \text{ rem}.$$

The dose to the total body is:

$$D(50) = (1.25 \times 10^{-4})(9.357 \times 10^{3}),$$

$$= 1.17 \text{ rem.}$$

The Inhalation Dose Conversion Factors for other organs of the body are given below:

ORGAN	IDCF (rem/μCi inhaled)
Lungs	1.25×10^{-4}
Res lymph	2.48×10^{-4}
Total body	1.25×10^{-4}
Liver	1.24×10^{-4}
Bone	5.57×10^{-5}
Red marrow	1.24×10^{-4}
Endosteal cells	9.85×10^{-5}
Thyroid	1.24×10^{-4}
Testes	1.25×10^{-4}

These dose estimates assume that there is no oxidation of HT or TT to HTO or TTO during the exposure and that internal exposure from HT or TT is negligible. [The ratio of dose rate in a cloud of HT compared to the dose rate of HTO is 1×10^{-4} as discussed by Pinson and Langham, "Physiology and Toxicology of Tritium in Man," *J. Applied Physiol.*, **10**, 108, (1957).]

This dose to the Res lymph system is equivalent to one-half the annual dose allowed a radiation worker. The dose to the total body is equivalent to approximately one-fourth the annual dose allowed a radiation worker, and approximately equivalent to 12 chest X rays.

This calculation is very conservative in that it assumes that the individual will remain in the room for 2.3 h after breakage occurs.

Calculation of Dose from HTO in Postulated Warehouse Accident Scenario

The internal dosimetry of an intake of HTO associated with a postulated warehouse accident and subsequent breakage of six tritium airfield lights has been assessed. The assessment is speculative and represents a worst case situation. Actual doses are expected to be much less than the calculated value.

The following assumptions apply to this assessment:

1. The total tritium activity in six lights is 3,984 Ci and all four tubes in each of the six lights are broken.

2. The instantaneous concentration of tritium in the warehouse area is 29.3 μCi/cm^3 resulting from diffusion of the tritium upon breakage of all the tubes.

3. The warehouse area size is 20 x 20 x 12 ft (smaller than most work areas in which the units are likely to be stored or assembled).

4. The air circulation from all sources is equivalent to five changes per hour.

5. The fraction of the released tritium present as HTO or TTO is 0.04%, which is twice the amount as is shown in a typical tritium product analysis. No oxidation of HT or TT takes place. The absorption of HT or TT into water present is negligible.

6. The standard man occupational breathing rate of 9.6 x 10^3 L in the occupational 8-h day (3.33 x 10^2 cm^3/s) applies (i.e., no heavy breathing occurs).

7. Once the concentration of tritium in the room has been reduced to 10% of the initial concentration, it is assumed the area has been cleared of people and/or tritium.

8. No factors are applied to compensate for more than one person or activity being in the area (i.e., the movement and breathing of several people would tend to disperse the material and lower the concentration).

9. The accuracy of the calculation is probably +0, -100% but cannot be fully assessed without a meaningful experimental study of the situation.

With these assumptions and data we can calculate the quantity (microcuries) of tritium inhaled as HTO or TTO.

$$QI = (C_a)(fw)(BR)(t),$$

where

QI = quantity inhaled (μCi),

C_a = total tritium concentration ($\mu Ci/cm^3$); i.e., average room concentration,

fw = fraction of the tritium present as HTO or TTO,

BR = breathing rate during the exposure (cm^3/s),

t = exposure time (s).

The time required to achieve a concentration of 10% of the initial concentration is calculated by the following relationship:

$$\ln C_t - \ln C_0 = (-F/V_m)(t)$$

where

C_t = concentration at time t ($\mu Ci/cm^3$),

C_0 = initial concentration ($\mu Ci/cm^3$),

F = flow rate in room (cm^3/s),

V_m = mean volume of room (cm^3),

t = time (s).

Since C_t is 0.1 C_0, the time required for this condition to occur can be calculated as follows:,

$$t = (V_m)(\ln 0.1)/(-F),$$

$$C_0 = QR/V_m,$$

where

QR = quantity released (μCi),

V_m = room volume (cm^3).

Therefore,

$C_0 = 3.984 \times 10^9 / 1.36 \times 10^8$,

$= 29.3\ \mu Ci/cm^3$.

$C_t = 0.1\ C_0 = 2.93\ \mu Ci/cm^3$.

$F = 1.36 \times 10^8 / 7.2 \times 10^2 = 1.89 \times 10^5\ cm^3/s$.

$t = (1.36 \times 10^8)(\ln 0.1)/(-1.89 \times 10^5)$,

$= 1.657 \times 10^3\ s\ (0.46\ h)$.

The log mean concentration is obtained by the following equation:

$C_a = (C_0 - C_t)/[\ln (C_0/C_t)]$,

$= (29.3 - 2.93)/\ln 10$,

$= 11.45\ \mu Ci/cm^3$.

Therefore,

$QI = (C_a)(fw)(BR)(t)$,

where

QI = quantity inhaled (μCi),

C_a = log mean concentration ($\mu Ci/cm^3$),

fw = fraction of tritium present as HTO or TTO,

BR = breathing rate (cm^3/s),

t = exposure time (s).

$$QI = (11.45)(4.0 \times 10^{-4})(3.33 \times 10^{2})(1.657 \times 10^{3}),$$

$$= 2.53 \times 10^{3}\ \mu Ci.$$

The calculation of 50-year committed dose is made using tabulated values from NUREG/CR-0150 (ORNL/NUREG/TM-190), *Estimates of Internal Dose Equivalent to 22 Target Organs for Radionuclides Occurring in Routine Releases from Nuclear Fuel Facilities,* by G. G. Killough, D. E. Dunning, Jr., S. R. Bernard, and J. C. Pleasant, June 1978. The Inhalation Dose Conversion Factor (IDCF) also accounts for absorption of HTO or TTO through the skin. For every microcurie inhaled, 0.5 μCi are absorbed through the skin.

$$D(50) = (IDCF)(QI),$$

where

D(50) = 50-year committed dose (rem),

IDCF = inhalation dose conversion factor (rem/μCi),

QI = quantity inhaled (μCi).

Maximum dose any organ in the body is to the Res lymph:

$$D(50) = (2.48 \times 10^{-4})(2.53 \times 10^{3}),$$

$$= 0.63 \text{ rem}.$$

The dose to the total body is:

$$D(50) = (1.25 \times 10^{-4})(2.53 \times 10^{3}),$$

$$= 0.32 \text{ rem}.$$

The Inhalation Dose Conversion Factors for other organs of the body are given below:

ORGAN	IDCF (rem/μCi inhaled)
Lungs	1.25×10^{-4}
Res lymph	2.48×10^{-4}
Total body	1.25×10^{-4}
Liver	1.24×10^{-4}
Bone	5.57×10^{-5}
Red marrow	1.24×10^{-4}
Endosteal cells	9.85×10^{-5}
Thyroid	1.24×10^{-4}
Testes	1.25×10^{-4}

These dose estimates assume that there is no oxidation of HT or TT to HTO or TTO during the exposure and that internal exposure from HT or TT is negligible. [The ratio of dose rate in a cloud of HT compared to the dose rate of HTO is 1×10^{-4} as discussed by Pinson and Langham, "Physiology and Toxicology of Tritium in Man," *J. Appl. Physiol.*, **10**, 108, (1957).]

This dose to the lymph system is equivalent to one-eighth the annual dose allowed a radiation worker. The dose to the total body is equivalent to approximately one-sixteenth the annual dose allowed a radiation worker or seven chest X rays.

This calculation is very conservative in that it assumes that the individual will remain in the area for approximately 0.5 h after breakage occurs.

Calculation of Dose from HTO in Tritium Light Panel in Postulated Outdoor or Runway/Taxiway Accident Scenario

The internal dosimetry of an intake of HTO associated with a postulated outdoor accident and subsequent breakage of three tritium runway or taxiway marker signs has been assessed. The assessment is highly speculative and unquestionably represents a worst case situation. Actual doses are expected to be much less than the calculated value.

The following assumptions apply to this assessment.

1. The total tritium activity per sign is 664 Ci. The maximum number of signs at any one location on the runway or taxiway is three and all tubes are broken for a release of 1992 Ci total. There are four tubes in each sign, which contain 166 Ci.

2. The instantaneous concentration of tritium in the atmosphere is 222.1 μCi/cm^3 which occurs at a distance of 10.0 m downwind from the release point and results from diffusion of the tritium upon breakage of all the tubes in the three signs. (The computer program used in making the calculations of this concentration is included in this appendix. The calculations are made using the diffusion plume model presented in *Meteorology and Atomic Energy 1968*, edited by David H. Slade of the Air Resources Laboratories.

3. The release height is assumed to be 1.0 m.

4. The wind velocity is assumed to be 3.0 mph which results in an atmospheric stability condition "C", moderately unstable.

5. The fraction of the released tritium present as HTO or TTO is 0.04%, which is twice the amount as is shown in a typical tritium product analysis. No oxidation of HT or TT takes place. The absorption of HT or TT into atmospheric water present is negligible.

6. The standard man occupational breathing rate of 9.6 x10^3 L in the occupational 8-h day (3.33 x 10^2 cm^3/s) applies (i.e., no heavy breathing occurs).

7. The accuracy of the calculation is probably +0, -100% but cannot be fully assessed without a meaningful experimental study of the situation.

With these assumptions and data, the quantity (microcuries) of tritium inhaled as HTO or TTO can be calculated.

Therefore,

$$QI = (C_a)(fw)(BR)(t),$$

where

QI = quantity inhaled (μCi),

C_a = concentration of tritium in the air ($\mu Ci/cm^3$),

fw = fraction of tritium present as HTO or TTO,

BR = breathing rate (cm^3/s),

t = exposure time (s).

$$QI = (222.1)(4.0 \times 10^{-4})(3.33 \times 10^{2})(60.0),$$

$$= 1.775 \times 10^{3}\ \mu Ci.$$

The calculation of 50-year committed dose is made using tabulated values from NUREG/CR-0150 (ORNL/NUREG/TM-190), *Estimates of Internal Dose Equivalent to 22 Target Organs for Radionuclides Occurring in Routine Releases from Nuclear Fuel Facilities,* by G. G. Killough, D. E. Dunning, Jr., S. R. Bernard, and J. C. Pleasant, June 1978. The Inhalation Dose Conversion Factor (IDCF) also accounts for absorption of HTO or TTO through the skin. For every microcurie inhaled, 0.5 μCi are absorbed through the skin.

$$D(50) = (IDCF)(QI),$$

where

$D(50)$ = 50-year committed dose (rem),

$IDCF$ = inhalation dose conversion factor (rem/μCi),

QI = quantity inhaled (μCi).

Maximum Dose to any organ in the body is to the Res lymph:

$D(50) = (2.48 \times 10^{-4})(1.775 \times 10^{3})$,

$D(50) = 0.44$ rem.

The dose to the total body is:

$D(50) = (1.25 \times 10^{-4})(1.775 \times 10^{3})$,

$= 0.222$ rem.

The Inhalation Dose Conversion Factors for other areas of the body are presented below:

ORGAN	IDCF (rem/μCi inhaled)
Lungs	1.25×10^{-4}
Res lymph	2.48×10^{-4}
Total body	1.25×1^{-4}
Liver	1.24×10^{-4}
Bone	5.57×10^{-5}
Red marrow	1.24×10^{-4}
Endosteal cells	9.85×10^{-5}
Thyroid	1.24×10^{-4}
Testes	1.25×10^{-4}

These dose estimates assume that there is no oxidation of HT or TT to HTO or TTO during the exposure and that internal exposure from HT or TT is negligible. [The ratio of dose rate in a cloud of HT compared to the dose rate of HTO is 1×10^{-4} as discussed by Pinson and Langham, "Physiology and Toxicology of Tritium in Man," *J. Appl. Physiol.*, **10**, 108, (1957).]

The dose to the Res lymph system is equivalent to one-tenth of the annual dose allowed a radiation worker. The dose to the total body is approximately equivalent to 5% of the annual dose allowed a radiation worker or four chest X rays.

This calculation is very conservative in that it assumes that the individual will remain in the exact area of maximum concentration for the entire period.

Release of Tritium Through Glass Tubes from Radioluminescent Lights

The following assumptions apply to this assessment:

1. The average temperature is 300°K (approximately 27°C, or slightly warmer than normal room temperature).

2. The back diffusion, or back permeation pressure is 0.1 Pa. Actual pressure in the tube is less than 1 atm. the positive back permeation pressure has been determined by experimentation to be 7.0×10^{-6} Pa. This value is very conservative since the controls used in the experiment were within 5% of the actual samples.

The permeation rate in moles/second can be calculated using the following relationship:

$$P = (k)(A)(T)(1/t)(dP)(f)$$

where

P = permeation rate (mol/s),

k = permeation constant for hydrogen through Pyrex glass,
= 3.6×10^{-17} [mol/(m)(s)(Pa)(°K)],

A = area (m^2),

T = absolute temperature (°K),

dP = pressure differential (Pa),

f = factor to convert from hydrogen to tritium (ratio of molecular weights squared).

Therefore, for a typical RL light tube, the diffusion for a period of time can be calculated as follows:

$$P = (3.6 \times 10^{-17})(0.021)(300)(1/1.6 \times 10^{-3})(7.0 \times 10^{-6})(4/36),$$

$$= 1.1025 \times 10^{-19} \text{ mol/s.}$$

The curies released per tube in 1 year can be calculated as follows:

$$C = (P)(g)(SpA)(t)(f),$$

where

C = Ci released per tube (Ci/year),

P = permeation rate (mol/s),

g = gram molecular weight (g/mol),

SpA = Specific activity = 9640 Ci/g,

t = time (year),

f = conversion faction (s/year)

Therefore,

$$C = (1.1025 \times 10^{-19})(6)(9640)(1)(3.1536 \times 10^{7}),$$

$$= 2.011 \times 10^{-7} \text{ Ci/year or } 0.201\ \mu\text{Ci/year.}$$

Dose to an Individual from Tritium Released by Diffusion through Glass Tubes while Lights Are in Storage

The actual calculations made here were made for the dose to an individual during storage of 272 lights each containing 996 Ci as opposed to this particular case of 30 lights each containing 664 Ci. The dose is so small that the calculation for the larger number of lights (272) containing more curies (996) is presented here.

The following assumptions apply to this assessment:

1. All 272 light panels are stored in one non-ventilated storage room.

2. The storage room size is 9 x 15 x 8 ft. (This size is probably smaller than the typical storage area but is assumed for conservatism.)

3. The concentration of tritium in the room is assumed to be 4.3×10^{-7} μCi/cm^3, resulting from diffusion of the tritium from the lights into the room during a 1-year storage period during which the lights and room were undisturbed (not vented).

4. The fraction of released tritium present as HTO and TTO is assumed to be 100% to allow for the absorption by the conversion to tritiated water over the long storage period.

6. The standard man breathing rate of 9.6×10^3 L in the occupational 8-h day (3.33×10^2 cm^3/s) applies.

7. No factors are applied to compensate for more than one person being in the room (i.e. movement and breathing of several people would tend to disperse the material and lower the concentration).

8. The accuracy of the calculation is probably +0, -100% but cannot be fully assessed without a meaningful experimental study of the situation.

9. The total exposure time is assumed to be 1 h.

With these assumptions and data we can calculate the quantity (microcuries) of tritium inhales as HTO or TTO as follows:

$$QI = (C_a)(fw)(BR)(t),$$

where

QI = quantity inhaled (μCi),

C_a = tritium concentration in the air ($\mu Ci/cm^3$),

fw = fraction of the tritium present as HTO or TTO,

BR = breathing rate (cm^3/s),

t = time of exposure (s).

Therefore,

$$QI = (4.3 \times 10^{-7})(1.0)(3.33 \times 10^{2})(3600),$$

$$= 0.52\ \mu Ci.$$

The calculation of 50-year committed dose is made using tabulated values from NUREG/CR-0150 (ORNL/NUREG/TM-190), *Estimates of Internal Dose Equivalent to 22 Target Organs for Radionuclides Occurring in Routine Releases from Nuclear Fuel Facilities,* by G. G. Killough, D. E. Dunning, Jr., S. R. Bernard, and J. C. Pleasant, June 1978. The Inhalation Dose Conversion Factor (IDCF) also accounts for absorption of HTO or TTO through the skin. For every microcurie inhaled, 0.5 μCi are absorbed through the skin.

$$D(50) = (IDCF)(QI),$$

where

D(50) = 50-year committed dose (rem),

IDCF = inhalation dose conversion factor (rem/μCi),

QI = quantity inhaled (μCi).

The maximum dose to any organ in the body is to the Res lymph:

$$D(50) = (2.48 \times 10^{-4})(0.52),$$

$$= 1.3 \times 10^{-4}\ \text{rem or } 0.13\ \text{mrem}.$$

The dose to the total body is:

$$D(50) = (1.25 \times 10^{-4})(0.52),$$

$$= 6.5 \times 10^{-5} \text{ rem or } 0.07 \text{ mrem.}$$

The Inhalation Dose Conversion Factors for other areas of the body are given below:

ORGAN	IDCF (rem/μCi inhaled)
Lungs	1.25×10^{-4}
Res lymph	2.48×10^{-4}
Total body	1.25×1^{-4}
Liver	1.24×10^{-4}
Bone	5.57×10^{-5}
Red marrow	1.24×10^{-4}
Endosteal cells	9.85×10^{-5}
Thyroid	1.24×10^{-4}
Testes	1.25×10^{-4}

These dose estimates assume that there is no oxidation of HT or TT to HTO or TTO during the exposure and that internal exposure from HT or TT is negligible. [The ratio of dose rate in a cloud of HT compared to the dose rate of HTO is 1×10^{-4} as discussed by Pinson and Langham, "Physiology and Toxicology of Tritium in Man," *J. Appl. Physiol.*, **10**, 108, (1957).]

This dose to the lymph system is very small and is considered inconsequential. It is very conservative in that it is assumed that no diffusion out of the storage area occurs during a 1-year period and that no dilution of the material occurs during the opening of the area. It also assumes that the individual will work in the area for 1 h with no previous "airing out" of the facility.

Calculation of Dose from HTO in Tritium Light Panel in Postulated Outdoor or Runway/Taxiway Accident Scenario that Occurs in a Rainstorm

The internal dosimetry of an intake of HTO associated with a postulated outdoor accident and subsequent breakage of three tritium runway or taxiway marker signs has been assessed. This accident is assumed to have occurred in a rainstorm. This assessment is highly speculative and unquestionably represents a worst case situation. Actual doses are expected to be much lower than the calculated value.

The following assumptions apply to this assessment:

1. The total tritium activity per sign is 664 Ci. The maximum number of signs at any one location on the runway or taxiway is three and all tubes are broken for a release of 1992 Ci total. There are four tubes each containing 166 Ci in each sign.

2. The instantaneous concentration of tritium in the atmosphere is 222.1 $\mu Ci/cm^3$ which occurs at a distance of 10.0 m downwind from the release point and results from diffusion of the tritium upon breakage of all the tubes in the three signs. (The computer program used in making the calculations of this concentration is included in this appendix. The calculations are made using the diffusion plume model presented in *Meteorology and Atomic Energy 1968*, edited by David H. Slade of the Air Resources Laboratories.

3. The release height is assumed to be 1.0 m.

4. The wind velocity is assumed to be 3.0 mph which results in an atmospheric stability condition "C"— moderately unstable.

5. The fraction of the tritium, released from the tube, present as HTO or TTO is 0.04% which is twice the amount as is shown in a typical tritium product analysis. Oxidation of HT or TT takes place in that the tritium is oxidized and absorbed into the atmospheric water present in the air as a result of the rainstorm. The relative humidity (atmospheric water present) is assumed to 100%. The absorption of elemental and oxidized tritium into the

atmospheric water is 0.12%/h * of the elemental tritium gas. This is extremely conservative in that it assumes essentially intimate mixing with the atmospheric water.

6. The standard man occupational breathing rate of 9.6×10^3 L in the occupational 8-h day (3.33×10^2 cm^3/s) applies (i.e., no heavy breathing occurs).

7. The accuracy of the calculation is probably +0, -100% but cannot be fully assessed without a meaningful experimental study of the situation. Further conservatism is built into the model in that 100%* of the tritiated water present will be removed from the air by the scrubbing action of the falling rain. Therefore, the increased rate of tritiated water conversion during a rainstorm is offset by the fact that the tritiated water is removed from the vapor phase by contact with the falling liquid water. The actual personnel exposure is then limited to contact with the elemental gas. However, it has been assumed, for this calculation and for conservatism, that all the tritiated water vapor remains in the air.

With these assumptions and data the quantity (microcuries) of tritium inhaled as HTO or TTO can be calculated.

$$QI = (C_a)(fw)(BR)(t),$$

where

QI = quantity inhaled (μCi),

C_a = concentration of tritium in the air ($\mu Ci/cm^3$),

fw = fraction of tritium present as HTO or TTO,

BR = breathing rate (cm^3/s),

t = exposure time (s).

---

*Valentine, Allen M., *An Investigation of a Bubble Tritium Sampler*, Los Alamos National Laboratory, LA-3916, July 1968.

Therefore,

$$QI = (222.1)(1.60 \times 10^{-3})(3.33 \times 10^{2})(60.0),$$

$$= 7.1 \times 10^{3}\ \mu Ci.$$

The calculation of 50-year committed dose is made using tabulated values from NUREG/CR-0150 (ORNL/NUREG/TM-190), *Estimates of Internal Dose Equivalent to 22 Target Organs for Radionuclides Occurring in Routine Releases from Nuclear Fuel Facilities,* by G. G. Killough, D. E. Dunning, Jr., S. R. Bernard, and J. C. Pleasant, June 1978. The Inhalation Dose Conversion Factor (IDCF) also accounts for absorption of HTO or TTO through the skin. For every microcurie inhaled, 0.5 μCi are absorbed through the skin.

$$D(50) = (IDCF)(QI),$$

where

D(50) = 50-year committed dose (rem),

IDCF = inhalation dose conversion factor (rem/μCi),

QI = quantity inhaled (μCi).

Maximum Dose to any organ in the body is to the Res lymph:

$$D(50) = (2.48 \times 10^{-4})(7.1 \times 10^{3}),$$

$$= 1.76 \text{ rem}.$$

The dose to the total body is:

$$D(50) = (1.25 \times 10^{-4})(7.1 \times 10^{3}),$$

$$= 0.888 \text{ rem}.$$

The Inhalation Dose Conversion Factors for other areas of the body are given below:

ORGAN	IDCF (rem/μCi inhaled)
Lungs	1.25×10^{-4}
Res lymph	2.48×10^{-4}
Total body	1.25×1^{-4}
Liver	1.24×10^{-4}
Bone	5.57×10^{-5}
Red marrow	1.24×10^{-4}
Endosteal cells	9.85×10^{-5}
Thyroid	1.24×10^{-4}
Testes	1.25×10^{-4}

These dose estimates assume that there is no additional oxidation of HT or TT to HTO or TTO during the actual exposure and that internal exposure from HT or TT is negligible. [The ratio of dose rate in a cloud of HT compared to the dose rate of HTO is 1×10^{-4} as discussed by Pinson and Langham, "Physiology and Toxicology of Tritium in Man," *J. Appl. Physiol.*, **10**, 108, (1957).]

The dose to the lymph system is equivalent to 35% of the annual dose allowed a radiation worker. The dose to the total body is approximately equivalent to 18% of the annual dose allowed a radiation worker or 18 chest X rays.

This calculation is also very conservative in that it assumes that the individual will remain in the exact area of maximum concentration for the entire period.

Computer Program Used to Calculate Downwind Tritium Concentration after Release of Material from Thirty Taxiway or Runway Signs in a Fire Situation

```
C   NOVEMBER 23, 1987
C   DOWNWIND TRITIUM CONCENTRATION AFTER RELEASE OF
    MATERIAL
C   FROM THIRTY TAXIWAY OR RUNWAY MARKER SIGNS IN A
    FIRE
C   SITUATION.
C   CALCULATION FOR ATMOSPHERIC STABILITY CONDITION "C",
C   SLIGHTLY UNSTABLE
C
C   Q = RELEASE RATE OF RADIONUCLIDE IN CURIES PER
      SECOND
C
C
    U = WIND VELOCITY IN METERS/SEC (3 MILES/HOUR=1.341 M/S)
C
C   H = PLUME HEIGHT IN METERS
C
    DIMENSION D(22),SIGZ(22),SIGY(22)
    DATA D/2.0,5.0,10.0,30.0,50.0,70.0,100.0,200.0,300.0,
    C400.0,500.0,600.0,800.0,1000.0,1200.0,1500.0,1750.0,
    C2000.0,2500.0,3000.0,4000.0,5000.0/
    DATA SIGZ/0.16,0.40,0.78,2.30,3.85,5.35,7.60,15.00,
    C22.00,30.00,36.50,42.00,53.50,66.00,74.50,94.50,105.00,
    C125.00,148.00,172.00,206.00,258.00/
    DATA SIGY/0.23,0.59,1.20,3.70,6.30,8.90,13.00,26.00,37.00,
    C48.00,61.00,70.50,89.00,113.00,133.00,160.00,180.00,205.00,
    C250.00,295.00,378.00,463.00/
C
    DATA Q/5.55/,U/1.341/,H/50.0/
C
C
    WRITE(3,100)
C
C
100
FORMAT(1X,5X,'DISTANCE',6X,'DIFF.COEF.',8X,'CONCENTRATION',/,
    C6X,'(METERS)',5X,'SIGZ      SIGY',8X,'MICROCI/CM3')
    DO 210 I=1,22
```

```
      CHI=(Q/(3.14159*U*SIGZ(I)*SIGY(I)))*EXP(-(H**2/(2*(SIGZ(I)**2))))
C
      WRITE(3,205) D(I),SIGZ(I),SIGY(I),CHI
205   FORMAT(6X,F6.1,6X,F6.2,2X,F6.2,7X,E12.7)
C
210   CONTINUE

C
      STOP
      END
```

Computer Program Used to Calculate Downwind Tritium Concentration after Release of Material from Three Taxiway or Runway Marker Signs at Ground Level

```
C   NOVEMBER 23, 1987
C   DOWNWIND TRITIUM CONCENTRATION AFTER RELEASE OF
    MATERIAL
C   FROM THREE TAXIWAY OR RUNWAY MARKER SIGNS AT
    GROUND LEVEL.
C   CALCULATION IS FOR AN ATMOSPHERIC STABILITY CONDITION
    "C",
C   SLIGHTLY UNSTABLE
C
C   Q = RELEASE RATE OF RADIONUCLIDE IN CURIES PER
      SECOND
C
C   U = WIND VELOCITY IN METERS/SEC (3 MILES/HOUR=1.341 M/S)
C
C   H = HEIGHT OF RELEASE IN METERS
C
    DIMENSION D(22),SIGZ(22),SIGY(22)
    DATA D/2.0,5.0,10.0,30.0,50.0,70.0,100.0,200.0,300.0,
    C400.0,500.0,600.0,800.0,1000.0,1200.0,1500.0,1750.0,
    C2000.0,2500.0,3000.0,4000.0,5000.0/
    DATA SIGZ/0.16,0.40,0.78,2.30,3.85,5.35,7.60,15.00,
    C22.00,30.00,36.50,42.00,53.50,66.00,74.50,94.50,105.00,
    C125.00,148.00,172.00,206.00,258.00/
    DATA SIGY/0.23,0.59,1.20,3.70,6.30,8.90,13.00,26.00,37.00,
    C48.00,61.00,70.50,89.00,113.00,133.00,160.00,180.00,205.00,
    C250.00,295.00,378.00,463.00/
C
    DATA Q/1992.0/,U/1.341/,H/1.0/
C
C
    WRITE(3,100)
C
C
100 FORMAT(1X,5X,'DISTANCE',6X,'DIFF.
    COEF.',8X,'CONCENTRATION',/,
    C6X,'(METERS)',5X,'SIGZ      SIGY',8X,'MICROCI/CM3')
    DO 210 I=1,22
```

```
      CHI=(Q/(3.14159*U*SIGZ(I)*SIGY(I)))*EXP(-(H**2/(2*(SIGZ(I)**2))))
C
      WRITE(3,205) D(I),SIGZ(I),SIGY(I),CHI
205   FORMAT(6X,F6.1,6X,F6.2,2X,F6.2,7X,E12.7)
C
210   CONTINUE
C

      STOP
      END
```

Appendix C

SECURITY PLAN

SECURITY PLAN

RADIOLUMINESCENT LIGHT FIXTURES

CITY OF ST. PETERSBURG, FLORIDA

GENERAL

Purpose

The purpose of this Security Plan for radioluminescent (RL) light fixtures is to provide for the physical security of the RL light fixtures during storage, transport, and field installation. The plan is in three parts: 1) on-site storage and use at Albert Whitted Airport; 2) transit from one site to another; and 3) requirements for facilities other than Albert Whitted.

Content

Each part of this plan shall include, as applicable, the purpose, general description of the materials involved, use/storage facilities and containment, inventory requirements, material movement, key control and authorized personnel having access to materials and devices, notification list in the event of a breach of security, and procedures for modifications/additions to the procedures.

A. On-Site Storage and Use at Albert Whitted Airport

1. Purpose. The purpose of this part is to provide protection for RL light fixtures while stored or used within the Albert Whitted Airport confines.

2. General Description of Materials. Materials covered by this security plan include fabricated RL light units containing tritium which are used for airfield signage, taxiway markers, and runway lighting as appropriate.

3. Use/Storage Facilities and Containment. The materials covered by this plan shall be stored in ventilated, locked rooms at all times when not in use. During periods in which the units are being used (other than at times when permanently deployed), they shall be under the continuous observation of a responsible individual. (See Number 5.)

Storage areas at Albert Whitted shall be limited to ventilated areas that can be locked. These include storage areas located in hangers and/or the port facilities adjacent to the airport.

When the units are deployed on the runways and/or taxiways they shall be secured by a tamper-proof device.

4. Inventory Requirements. A continuous inventory of the light fixtures shall be maintained. The inventory shall be kept on the form in Attachment A to this plan. Any receipt of material shall be entered on the form at the time of receipt. Any shipment or loss of material shall also be entered on the form. All tritium light transfers will be recorded so that accountability of the units may be maintained.

5. Material Movement. RL light fixture movement into and out of locked storage areas will be made under the supervision of authorized personnel. Authorized personnel for the purposes of this procedure shall be limited to those persons having key access and listed in the following section.

6. Key Control and Authorized personnel Having Access to Materials and Devices. Key control shall be maintained by the Airport and Port Director and limited to that individual and subordinates. Spare keys not in the physical possession of an individual will be kept in a locked storage in the Airport and Port Director's office.

   Personnel having access to the keys to the RL light fixture storage are limited to the following:

   a. Airport and Port Director
   b. Assistant Airport and Port Director

   The key custodian shall be instructed to limit access to the storage areas keys to the above-named persons unless specifically authorized by the Airport and Port Director or his department head. All other personnel desiring access for any reason will be accompanied by one of the above-named individuals.

7. Notification List in the Event of Breach of Security. In the event a breach of security is observed, the following persons shall be notified in the order listed: Airport and Port Director; Police Department, City of St. Petersburg, Florida, Florida State Department of Transportation, Aviation Bureau; Florida Department of Health and Rehabilitative Services, Office of Radiation Control. The principal individuals shall be listed on the door of the storage area as shown below.

	Office	Home
D. T. Travis, Dir. Port and Airport Assistant Airport and Port Director.	(813) 893-7654	(813) 896-1518

8. Modifications/Additions/Supplements to this Procedure. Modifications, additions, or supplements may be made to this procedure as deemed necessary and prudent. Distribution of the changes shall be made to the recipients of the procedure.

B. Security During Transport

1. Purpose. The purpose of this part is to provide for the protection of RL light fixtures while being transported from one site to another.

2. General Description of Materials. Materials covered by this security plan include fabricated RL light units containing tritium which are used for airfield signage, taxiway markers, and runway lighting as appropriate.

3. Transport Requirements and Key Control. When practical, commercial transportation will be used to move light fixtures between the storage site and a use site if other than Albert Whitted Airport. When City of St. Petersburg, State of Florida, or one of their contractor's personnel are transporting the lights and a stopover between modes of transportation is required, the lights will be secured in a locked shelter, van, or truck until the transfer is complete. When commercial transportation is utilized, the carrier will be requested to provide adequate security during stopovers.

When transport vehicles are used by City of St. Petersburg, State of Florida, or one of their contractor's personnel, an enclosed type with lockable doors will be used. The doors of the vehicle will be locked at all times when not attended. The assigned driver of the vehicle will maintain control of the vehicle keys. An inventory sheet as shown in Attachment A of this plan shall be completed for these shipments by the driver.

4. Inventory Requirements. A package inventory will be prepared at the time of shipment, and this inventory will accompany the shipment during its travel. When City of St. Petersburg, State of Florida, or one of their contractor's personnel are transporting the materials, the inventory will be checked at each transfer point to determine if a loss has occurred. The representative that receives a shipment made by commercial carrier will be responsible for checking the inventory.

5. Notification List in the Event of Breach of Security. The following list of personnel will be notified in the order of availability (one notification):

	Office	Home
D. T. Travis, Dir. Port and Airport Assistant Director Port and Airport.	(813) 893-7654	(813) 896-1518

If a loss or accident involving transport or use of the RL lights occurs, this notification will trigger appropriate notification of the State of Florida Department of Health and Rehabilitative Services, Office of Radiation Control: the City of St. Petersburg, Department of Health; and the Police Department of the City of St. Petersburg.

6. Modifications/Additions/Supplements to this Procedure. Modifications, additions, or supplements may be made to this procedure as deemed necessary and prudent. Distribution of the changes shall be made to the recipients of the procedure.

C. Requirements for Facilities Other than Albert Whitted Airport

1. Purpose. The purpose of this section is to provide for the protection of RL light fixtures when they are used at a facility other than Albert Whitted Airport, St. Petersburg, Florida.

2. General Description of Materials. Materials covered by this security plan include fabricated RL light units containing tritium that are used for airfield signage, taxiway markers, and runway lighting as appropriate.

3. Use/Storage Facilities and Containment. Generally, usage areas for RL light fixtures are outdoors. Security provided during the outdoor uses when the fixtures are not permanently installed as described in section A. of this plan shall meet as a minimum, but not limited to, the following:

   a. If the area is fenced with limited access and has 24-h operations and surveillance (such as an active airfield), then security precautions may be limited to the usual security provided these areas, i.e., denial of access to unauthorized persons, security patrols, etc. Then, the physical presence of personnel is not required other than as necessary for conducting tests. However, at a minimum, the lights and fixtures shall be securely affixed to the ground or to some structure that is affixed to the ground. This may be accomplished using stakes and wires or some other suitable means as prescribed by the Director of the Port and Airport of the City of St. Petersburg, Florida or his designated representative.

   b. Is the area is not fenced with limited access, fixtures shall be removed at the end of the test operation to an approved, locked storage area, or a 24-h guard will be posted.

   c. Storage areas at field test sites must be secure, lockable rooms or buildings, preferably with sufficient room for any assembly and/or disassembly of fixtures that may be required as well as storage space. Key control shall be limited to the personnel listed in section A. of this plan and to responsible site representatives directly involved in the test.

4. Inventory Requirements. A physical inventory of all fixtures shall be made daily. The inventory shall be kept on the form in Appendix B. Appropriate marginal notes shall be made on the form to adequately describe the location of all light fixtures.

5. Material Movement. Material and/or fixture movement into and out of the locked storage areas and the test sites will be made under the direct supervision of the authorized personnel described in section 3.c. above.

6. Notification List in the Event of Breach of Security or Unusual Occurrence. Reporting of unusual occurrences that may arise during field testing or transport of devices containing tritium will be accomplished as soon as practical.

   At a minimum, a report of the situation will be made to the Director, Port and Airport, City of St. Petersburg, FL at (813) 893-7654, who will notify necessary personnel in the City of St. Petersburg and the State of Florida, Department of Health and Rehabilitative Services, Office of Radiation Control.

   In addition to the reporting of details of the occurrence, Names and positions of local authorities who are in possession of information will also be reported.

7. Incorporation of this Plan into Test Plan. The provisions of this security plan shall, at a minimum, be incorporated into the test plan for the field test/exercise. Direct reference to this plan may be made as appropriate.

8. Modifications/Additions/Supplements to this Procedure. Modifications, additions, or supplements may be made to this procedure as deemed necessary and prudent. Distribution of the changes shall be made to the recipients of the procedure.

ATTACHMENT A

INVENTORY OF RADIOLUMINESCENT LIGHT FIXTURES

FIXTURE DESCRIPTION - GENERAL _____

FIXTURE	SERIAL NUMBER	TRITIUM CONTENT, CI

Appendix D

SAFETY PLAN

SAFETY PLAN FOR USE OF RADIOLUMINESCENT LIGHTS AT ALBERT WHITTED AIRPORT, ST. PETERSBURG, FLORIDA

1. Purpose. The purpose of this safety plan is to anticipate both general and radiological incidents in the use of radioluminescent (RL) lights at the Albert Whitted Airport in St. Petersburg, Florida and to reduce, control, and eliminate hazardous conditions. Before ground installation and air operations can begin at the airfield, official approval must be granted from the Airport and Port Director and the appropriate city officials.

2. Overall Safety Responsibility. The Airport and Port Director for the City of St. Petersburg, Florida or his designated representative is responsible for enforcing the overall safety program for the airfield to include usage of the RL lights.

3. Safety Areas. The safety requirements of the installation and use of RL runway and taxiway markers at the Albert Whitted Airport have been divided into two separate areas to establish the specific requirement for different operational areas:

   a. General Safety.
   b. Radiological Safety.

4. General Safety. The responsibility for general site safety resides with the Airport and Port Director. The authority to execute specific safety directives may be delegated to his designated representative.

   a. Information. The Director will inform all airport personnel and routine user personnel that the RL lights are installed on the airfield.

   b. Visitors. Visitors shall not be allowed unescorted on the runways or taxiways without approval of the Director. Visitors shall be instructed on applicable area safety regulations.

   c. Individual Safety Responsibilities. Careful attention to the hazards at the airport must be stressed. The purpose of safety rules is to outline the most important precautions to be taken by personnel using the airfield. Common sense must be applied to insure that safety prevails.

d. Vehicles. Speeds shall not exceed 30 mph when driving on the runways and taxiways. Vehicles will always be cleared on the runways and taxiways by the tower before entering. Seat belts will be used at all times while vehicles are in motion. Speed within the immediate area of aircraft operations shall not exceed 10 mph. When a vehicle is parked, the hand brake will be set and transmission placed in reverse (standard shift) or park (automatic).

e. Weather. Common sense will dictate activities on the airfield during adverse weather conditions. Operations involving RL lights will be canceled during periods when weather conditions cause closure of the airfield.

f. Accident Reporting. All accidents will be reported immediately to the Airport Director or his designated representative and standard operating procedures will be utilized.

5. Radiological Safety. While the city of St. Petersburg personnel will perform routine responsibilities for Health Physics services, the Airport Director has the services of Department of Energy facilities at the Oak Ridge National Laboratory (ORNL) at his call, if needed. The routine safety procedures for handling, transporting, storing, and installing the RL light fixtures on the airfield are specified below:

a. Hazard. These tritium-filled tubes do not emit any beta radiation outside their sealed glass containers, but in the event of tube breakage, specially designed containers will be on hand to package signs with broken tubes for safe transport to ORNL for disposal. Personnel exposure calculations have been made for maximum credible accident scenarios involving indoor, outdoor, and fire situations.

b. Responsibility. Overall responsibility and authority resides with the Director of the Port and Airport of the City of St. Petersburg; however, the Department of Energy has agreed to lend assistance to this endeavor and will provide expert health physics and environmental assessment personnel from its Oak Ridge National Laboratory in the event of a radiation related incident.

c. Training. The Director of the Port and Airport or his representative will brief individuals who will install and/or dismantle RL lights prior to any assignment of these personnel to work. The briefing will cover the following areas:

(1) safe handling,
(2) proper installation,
(3) breakage hazards and actions to be taken if breakage occurs, and
(4) physical security.

April 10, 1987

Mr. H. M. Butler,
Director of Health Physics Services
Oak Ridge National Laboratory
Post Office Box 2008
Oak Ridge, Tennessee 37831

Dear Mr. Butler:

Emergency Response Team for Tritium Light Tests

As you are aware, we are involved in a program sponsored by the US Air Force (USAF), the States of Florida and Alaska, and the Department of Energy to design, develop, and test tritium radioluminescent lights. We have conducted some 30 of these tests with no incident, however, as a result of conversations with the USAF health physicist working with their Radioisotope Committee, we are requesting that you establish an Emergency Response Team specifically outfitted and on call to respond to a release of tritium in a mishap occurring during one of the tests for which ORNL has responsibility.

The expenses incurred by the response team would be borne by the program here at Oak Ridge National Laboratory (ORNL) and would involve the following scenarios:

1. Per requirements of our Safety Plan for ALL RL light tests, when any unusual occurrence happens, the ORNL Test Director will notify the ORNL Laboratory Shift Supervisor (LSS). (This is done in the event of three occurrences, theft of government property, injury to an ORNL employee, and the inadvertent release of radioactive tritium.)

2. The LSS is then asked to notify appropriate supervision in ORNL and will be requested to notify you and/or your designated response team leader.

3. The response team would proceed to the test site and assume health physics responsibilities at the site to include as a minimum personnel monitoring and area monitoring. Oak Ridge National Laboratory light team carries a portable tritium monitor with them to the test site for all tests. The response team would be expected to bring any other equipment or supplies needed.

Sincerely,

Karl W. Haff, Program Manager
Byproducts Utilization Program

cc: H. L. Adair
D. R. Brown, DOE/ORO
J. A. Tompkins
D. T. Travis

APPENDIX E

INSTRUCTION MANUAL FOR INSTALLING TRITIUM RADIOLUMINESCENT (RL) AIRFIELD SIGNAGE AT ALBERT WHITTED MUNICIPAL AIRPORT ST. PETERSBURG, FLORIDA

INSTRUCTION MANUAL
FOR INSTALLING TRITIUM RADIOLUMINESCENT (RL) AIRFIELD SIGNAGE AT ALBERT WHITTED MUNICIPAL AIRPORT, ST. PETERSBURG, FLORIDA

K. W. Haff
J. A. Tompkins

Oak Ridge National Laboratory
Oak Ridge, Tennessee 37831

May 12, 1988

Prepared by the
OAK RIDGE NATIONAL LABORATORY
Oak Ridge, Tennessee 37830
operated by
MARTIN MARIETTA ENERGY SYSTEMS, INC.
for the
U S. DEPARTMENT OF ENERGY
Under Contract No. DE-AC05-84OR21400

CONTENTS

1. PRINCIPLE OF OPERATION OF RADIOLUMINESCENT (RL) LIGHTS 85

2. SAFETY 89

3. INVENTORY 93

4. ASSEMBLY OF UNITS 95

4.1 BASE ASSEMBLY 95
4.2 SIGNAGE ASSEMBLY AND INSTALLATION ON TO BASES 95

5. SIGNAGE REMOVAL AND REPACKAGING 99

6. DOCUMENTS AND LABELS REQUIRED FOR SHIPPING 101

1. PRINCIPLE OF OPERATION OF RADIOLUMINESCENT LIGHTS

Radioluminescent (RL) lights are powered with tritium, a radioactive isotope. Tritium is a heavy isotope of hydrogen (H-3) that emits low-energy beta radiation. When the beta radiation is absorbed by a phosphor, the phosphor emits light and produces the glow visible from the RL light.

The construction of the RL light is quite simple. The basic unit is a four-tube sign as shown in Fig. 2. There are four glass tubes that are phosphor coated on the inside and filled with tritium gas. These tubes are secured in a sealed polycarbonate box with a clear cover. The tubes are shock mounted to permit the unit to be handled without breaking the glass tubes. The signs are approximately 16 in. x 15 in. x 2.5 in. thick. They are installed on the runway by mounting them on base units as seen in Fig. 2. One-, two-, and three-unit assemblies are required for airfield signage applications and are placed side by side as dictated by the layout (see Fig. 3).

ORNL-DWG 88-9113

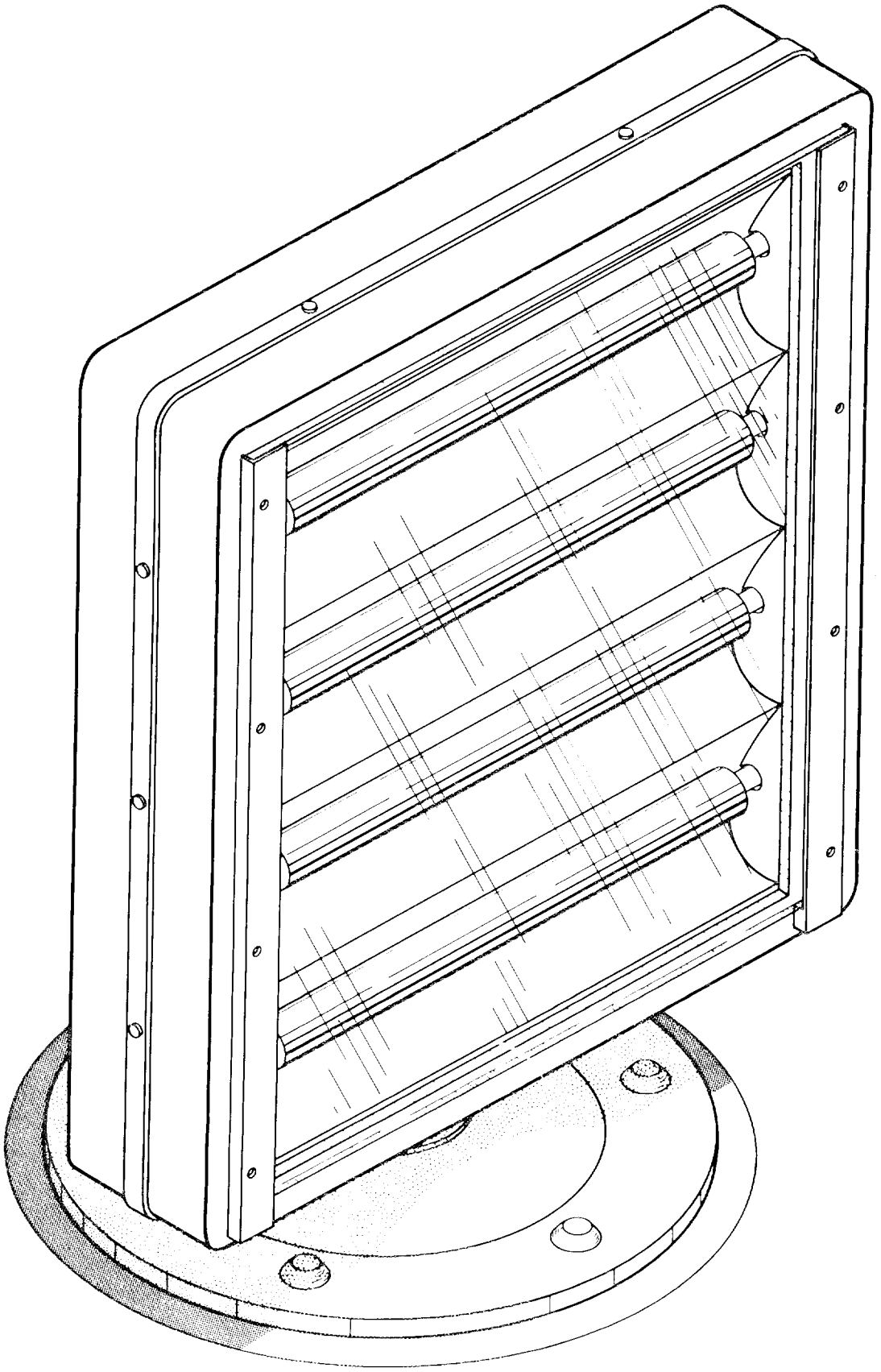

Fig. 2. Four-tube tritium RL light sign.

ORNL-DWG 88-8447

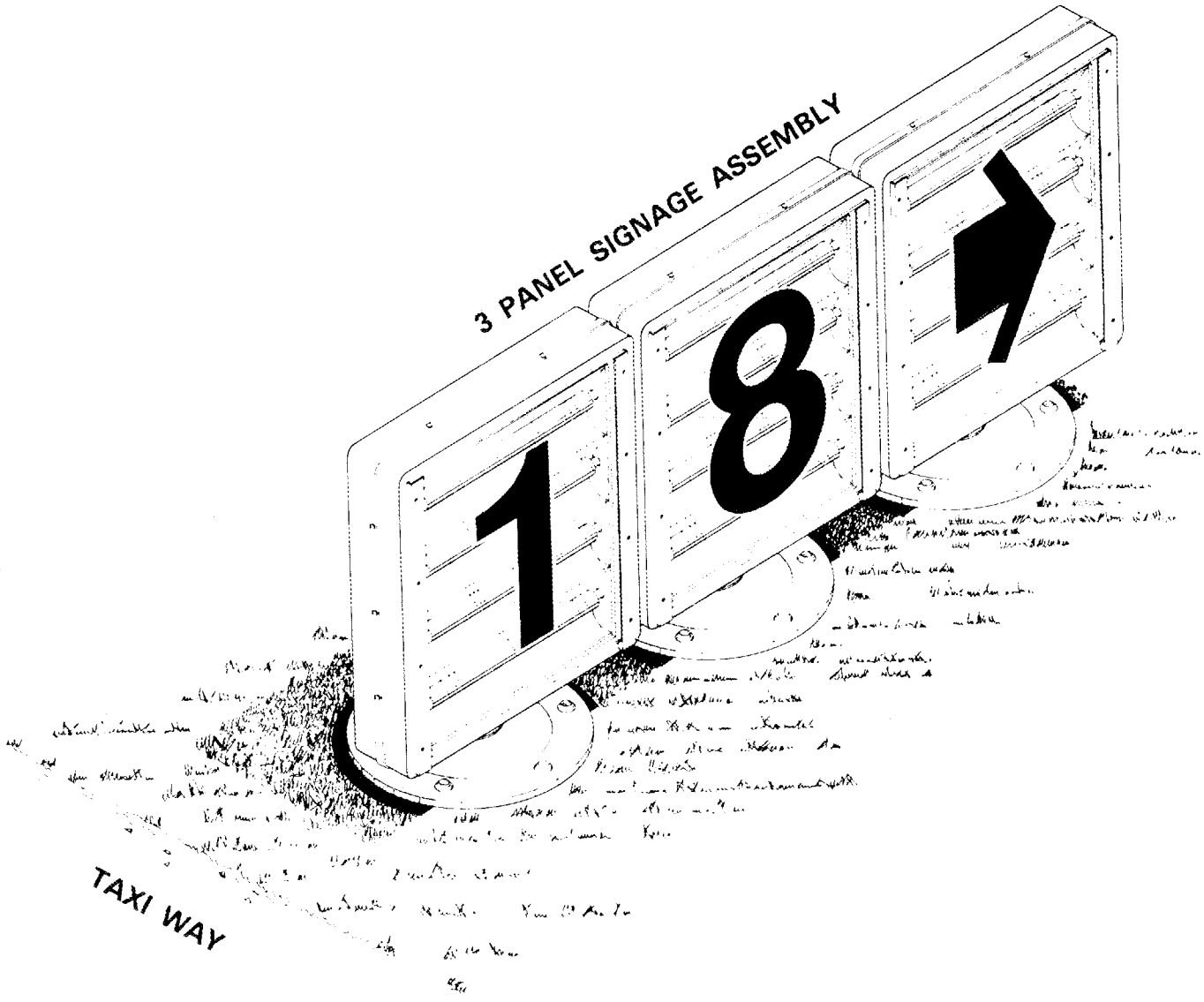

Fig. 3. Typical RL light signage unit assembly.

2. SAFETY

Tritium RL lights are inherently safe. However, like any piece of equipment, they can be damaged and can cause damage if mistreated and/or used improperly. The radiation emitted by tritium is completely shielded by the glass tube of the RL light.

Tritium is a gas and is rapidly dispersed should it be released into the atmosphere. It is desirable to avoid breathing the gas, however, inhalation of tritium is not fatal or even necessarily harmful. The gas is not readily absorbed by the lungs, so only very low radiation exposure occurs if the gas is breathed. However, should conditions exist in which tritiated water or tritium oxide (where tritium has replaced ordinary hydrogen in water) is formed, then the material is readily absorbed by the human body. It is for this reason that great care is exercised during the manufacture of the RL lights to exclude water from all systems.

The typical accident scenarios which might be encountered by personnel in handling the tritium RL light units are breakage of a unit in the open air and breakage of a unit in an enclosed area. Both of these scenarios have been investigated and are shown to present no significant danger to personnel. A four-tube RL sign contains 664 Ci of tritium (166 Ci per tube). The most severe test of the signs has never resulted in breaking the tubes; however, for purposes of the accident scenario calculations, it has been assumed that all four tubes are broken at once. In the open-air scenario, it was assumed that the individual stood in the area of maximum concentration (this is 10 m downwind from the point of release). The dose received by this individual is calculated to be 4.9 mrem. This dose is equivalent to about 7% of the dose received during a chest X ray or about 50% of the dose from cosmic radiation during a cross-country airplane trip.

In an indoor accident, the dose is larger, of course, due to the fact that the material cannot disperse as rapidly in a confined space. The calculations were also made for worst case situations with the assumption that the individual will remain in the room for 2.3 h after breakage occurs. The dose received by an individual in these circumstances is 426 mrem. This is approximately 8.5% of the allowable annual dose for a radiation worker and is the equivalent of about one chest X ray.

The above discussion points out the relative safety of tritium RL lights; however, it behooves us to exercise reasonable care in the handling of the lights. Simply stated, don't treat the lights roughly. Handle them with care and avoid dropping them. Do not place them on a stove or heated surface. Do not throw them.

There are no known environmental extremes which will affect the performance of the lights. The panel covers may be cleaned by wiping with a soft cloth or a mild detergent and water. Abrasive cleaners and/or scrapers should never be used since they will scratch the front cover.

While problems with the lights are not anticipated, a breakage or leakage can occur, and you should know how to recognize the problem. A tube breakage is obvious and need not be discussed here. However, a small crack and subsequent leak in a tube are not so obvious. You will probably recognize the first symptom as a tube appearing dark i.e., not giving off light like the other tubes. If you notice either of these conditions, evacuate the area, moving upwind. If the incident occurs outdoors, allow the unit to remain where it is for approximately 20 min. Meanwhile, notify the Airport Director. He will notify the Radiation Protection Officer (RPO), and he and the RPO will instruct you in placing the leaking or broken unit in a steel drum that can be used to ship the unit back to the manufacturer or to a disposal site. A picture of this drum is shown in Fig. 4. To use the drum, simply remove the bolt in the locking ring, remove the lid, place the broken or leaking sign in a plastic bag, place the sign in the drum, and replace the lid. Be sure to replace the bolt in the locking ring. Rubber gloves should be worn when handling broken or leaking signs. The rubber gloves should be placed in a plastic bag and disposed of in the drum immediately after handling the broken or leaking sign. Your hands should then be washed with soap and water.

ORNL-DWG 88-8449

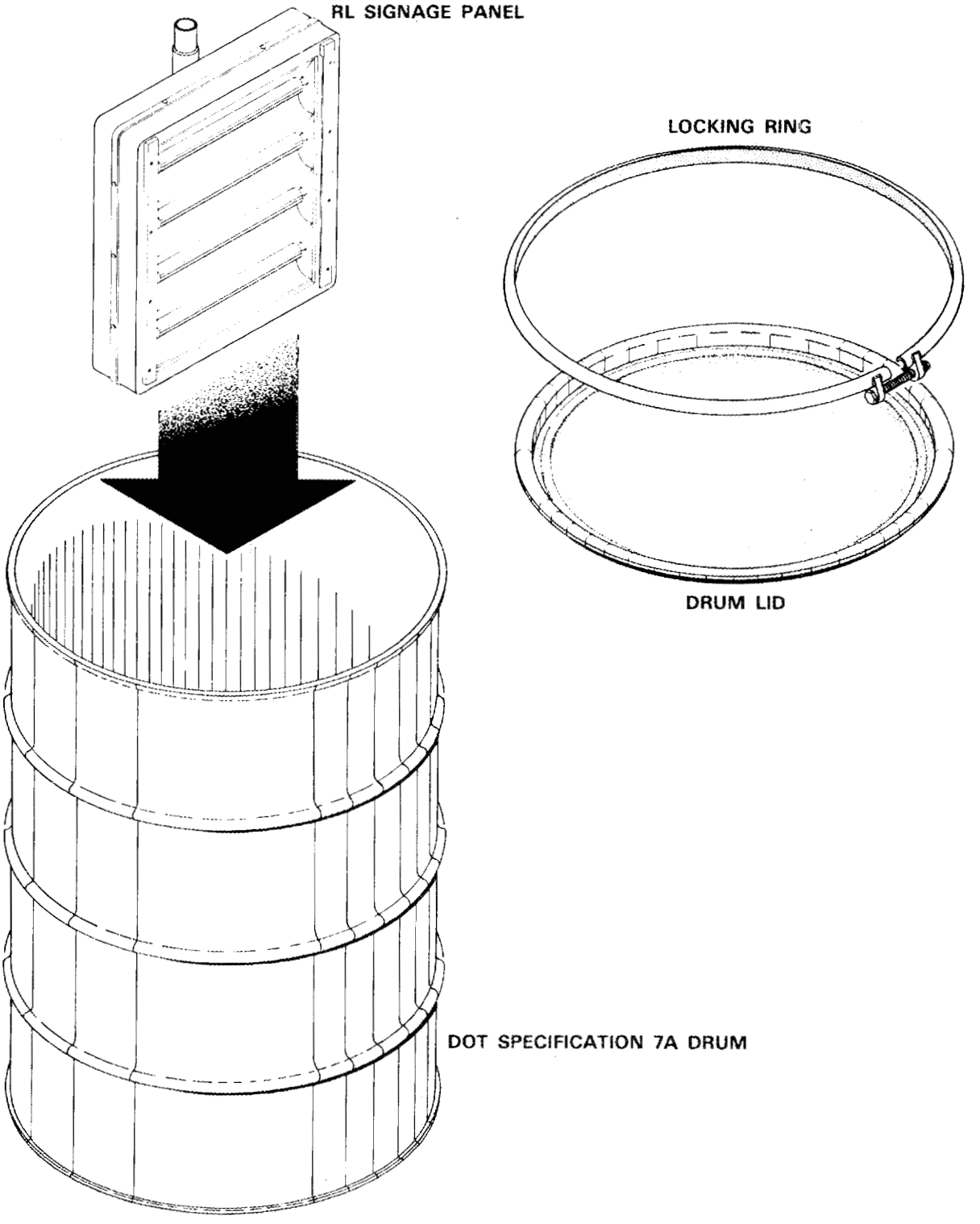

Fig. 4. Emergency shipping container.

3. INVENTORY

The first action to be completed in installing a tritium RL light run-way signage system is to inventory all of the RL light signs. A packing list of all this equipment is provided with each shipment. Check off the items on the list and report any shortages to the Airport Director.

4. ASSEMBLY OF UNITS

The assembly of the tritium RL light runway signage consists of base assembly, signage assembly, and installation onto the bases.

4.1 BASE ASSEMBLY

Base units will be preassembled at the correct locations on the airfield layout (Fig. 5). Bases should be checked for linearity at the two-and three-sign positions. All units should be checked for levelness with respect to the ground and with respect to the tops of the frangible couplings being at an even height. Center-to-center separation on the multiple unit bases is 16.25 in. with a -0.0 and +0.25-in. tolerance.

Each base unit will be fastened to the concrete pad with steel studs and tamper-resistant nuts. A tool for the tamper-resistant nuts will be supplied (Fig. 6).

4.2 SIGNAGE ASSEMBLY AND INSTALLATION ONTO BASES

The primary problems with installation of light units onto the airfield are safety and accountability. The hazards to personnel safety are breakage of a lighting unit and moving aircraft. A review of the radiation safety unit in Section 2. is a prerequisite. Safe-handling practices include use of the proper tools to install tamper-proof nuts and nonabusive handling of the light units themselves. The aircraft hazard can only be ameliorated by constant awareness of moving aircraft, giving the aircraft the right of way, and communication with the tower prior to crossing active runways. Accountability of the light units is maintained by keeping a running count of the units (by serial number) that have been installed.

The following steps should be followed for assembly and installation.

1. Remove the units from the packaging.

2. Inspect the units for cracks in the casing and loose tubes.

3. Transport the signage units to the prepared base assembly points and off-load.

ORNL-DWG 90-13860

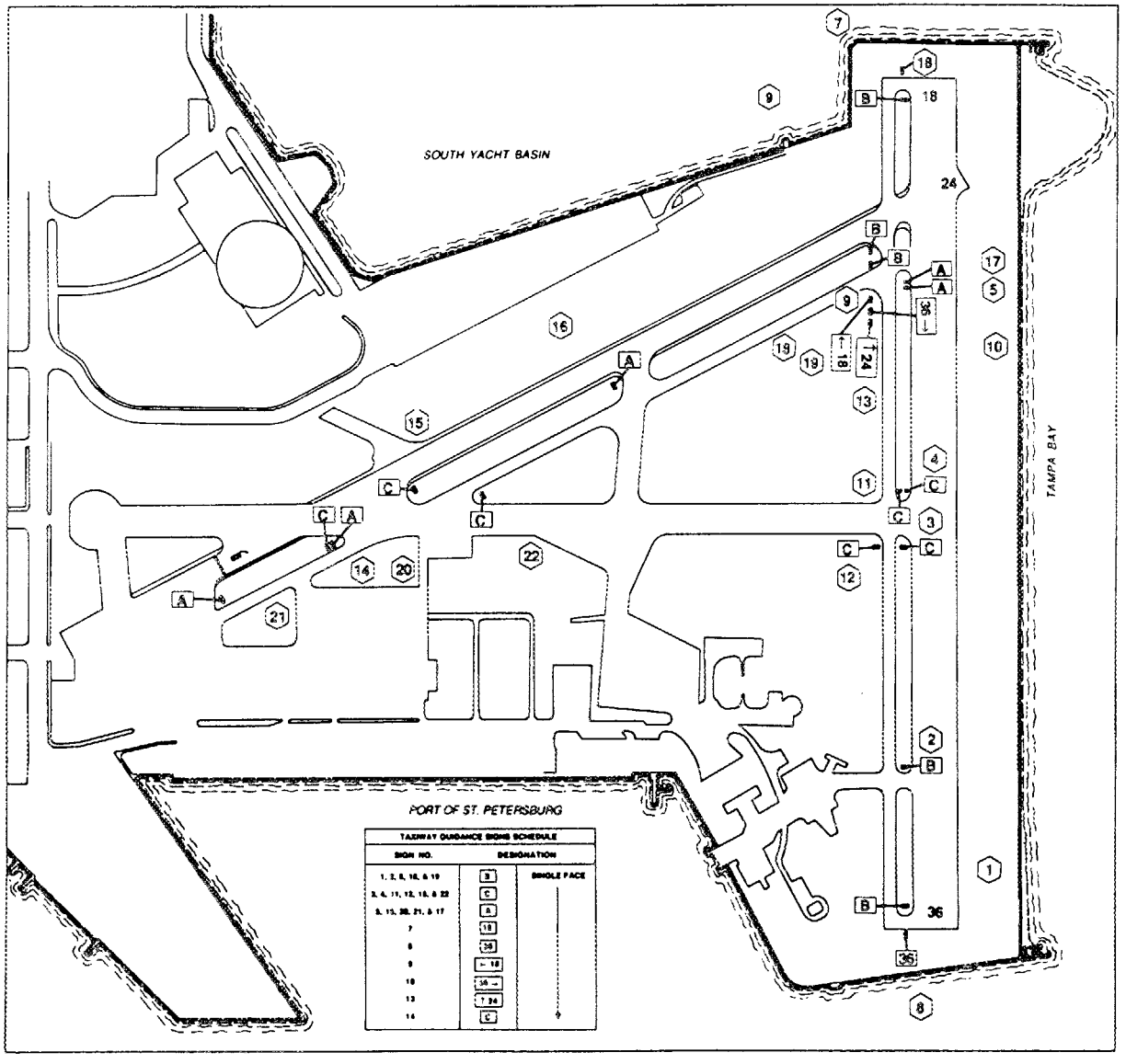

Fig. 5. Airfield signage layout.

ORNL-DWG 88-8448

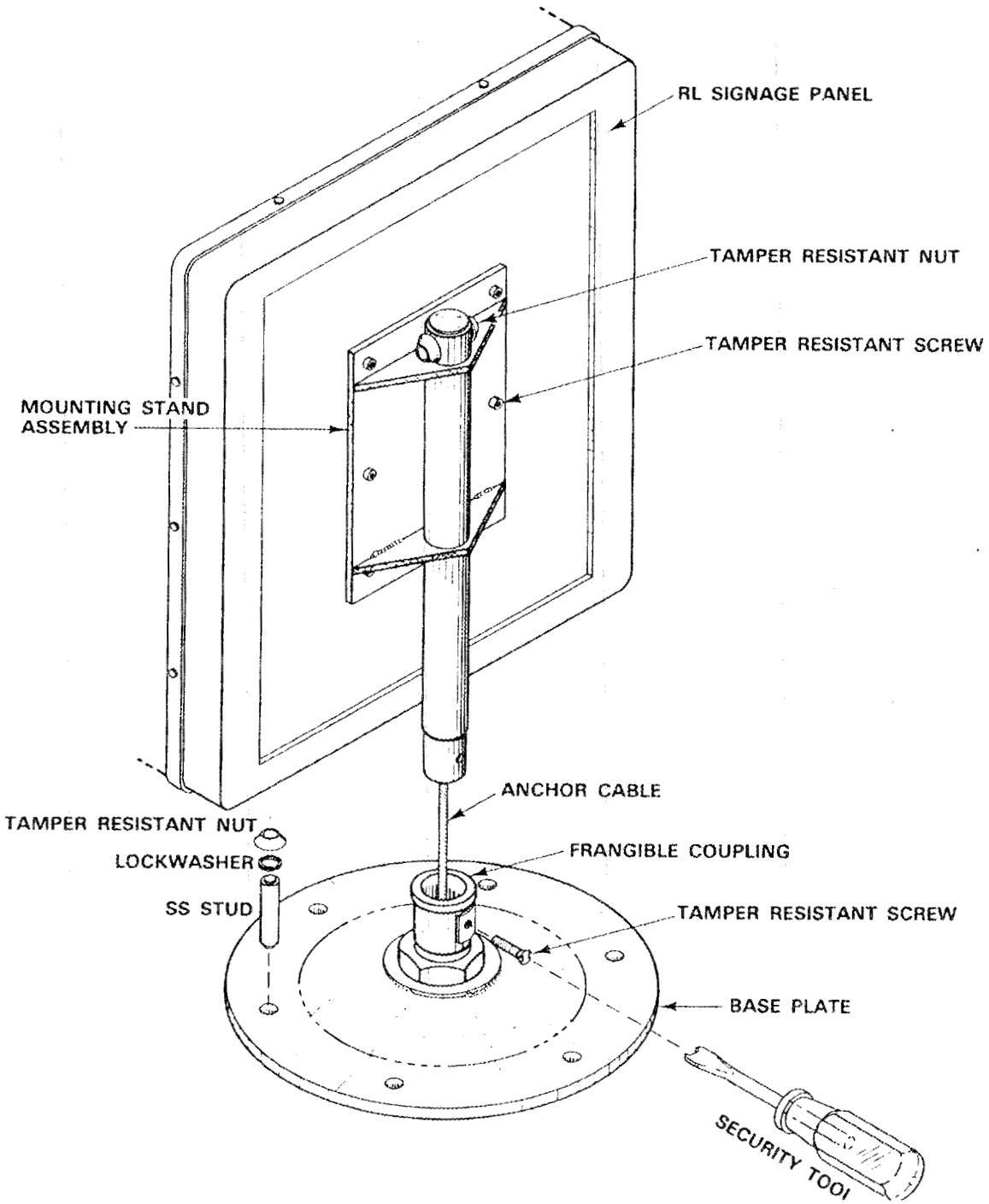

Fig. 6. RL light signage unit assembly and installation, showing special tool required.

4. Each signage unit will come with the mounting stand subassembly installed on the rear of the unit. The first step will be to position the retainer lug under the frangible coupling. Remove the frangible coupling and pass the anchor cable through it so that the upper retainer lug (there is a hole through it) is above the top end of the coupling. Replace the frangible coupling.

5. Insert the upper retainer lug in the lower end of the mounting stand tube. Position the retainer lug so that the stud provided can be passed through the holes in the upper end of the mounting stand tube. Install the tamper-resistant nuts on the stud. Install the weather cap on the upper end of the mounting stand tube.

6. Lift the signage unit. Orient the signage unit correctly with respect to the taxiway (Fig. 5). Screw the 1/4-20 x l-in. tamper-resistant fastener into the frangible coupling until it makes contact with the mounting stand tube. Tighten it sufficiently to mark the tube and then loosen the screw. Remove the mounting stand tube from the frangible coupling and drill a 0.266-in. (H drill) hole at the spot marked on the tube by the fastener. Remove burrs from the drilled hole.

7. Reinsert the mounting stand tube into the frangible coupling and orient the sign correctly. Retighten the tamper resistant screw. The screw head should be flush with the surface of the frangible coupling.

8. After each unit is assembled and in place, consult the airfield signage layout (Fig. 5) for the correct legend. Insert the legend in the vertical grooves on the front face of the sign and push down until the sheet is fully seated. Check the legend to ensure that orientation is not reversed.

5. SIGNAGE REMOVAL AND REPACKAGING

Generally, the lights will be removed from the runway and packed for shipment in the reverse order of their installation, assembly, and unpackaging. Save all parts. Please review, Sect. 9 on safety and assembly (Sect. 2 and Sect. 4).

Removal and repackaging of the sinage involves the following steps.

1. To remove the signs from the runway, remove the tamper-resistant screw from the frangible coupling (as instructed by the Airport Director) and remove the mounting stand tube.

2. Remove the tamper-resistant nuts from the upper retaining lug and remove the sign leaving the anchor cable in place.

3. Place each sign in a shipping box and tape the box with fiberglass tape. Do not put more than one sign in a box (due to the 1000 Ci limit for Type A packages).

4. Report all missing or damaged components.

5. Inventory all material.

6. DOCUMENTS AND LABELS REQUIRED FOR SHIPPING

1. Each package (box) containing radioactive material must have the following labels:

   a. address label,

   b. radioactive material label (2 each, White I Radioactive), and

   c. radioactive material marking (UN 2982. Radioactive Material, N.O.S.).

2. The following paperwork must be prepared for shipping the material:

   a. Bill of Lading,

   b. Shipper's Export Declaration (for international shipments only), and

   c. Shipper's Certification of Content.

3. This material must be shipped correctly. There are substantial penalties for violation of the Department of Transportation Hazardous Materials Shipping Regulations. If in doubt about labeling and marking, ask the Airport Director.

INTERNAL DISTRIBUTION

1. W. S. Aaron
2. H. L. Adair
3. J. T. Bell
4. R. L. Cline
5. E. D. Collins
6. A. G. Croff
7. R. K. Genung
8. R. G. Grubb
9-18. K. W. Haff
19. J. R. Hightower
20. K. H. King
21. G. E. Michaels
22. E. Newman
23. C. L. Ottinger
24. B. D. Patton
25. D. J. Pruett
26. D. W. Ramey
27-32. F. J. Schultz
33. J. A. Setaro
34. M. G. Stewart
35. R. D. Taylor
36. J. S. Wike
37. Central Research Library
38. ORNL Y-12 Technical Library Document Reference Section
39-40. Laboratory Records
41. Laboratory Records, RC
42. ORNL Patent Section

EXTERNAL DISTRIBUTION

43. D. Adrian, ORAU, 130 Badger Avenue, Post Office Box 117, Oak Ridge, Tennessee 37831-0117
44. R. S. Bennett, President, Reginald Bennett Consultants Inc., 815 Danforth Avenue, Suite 409, Toronto, Ontario M4J 1L2
45-49. D. Brady, Lt. Col., HQ AFESL YE, Tyndall AFB, Florida 32403
50. H. E. Brown, Ministry of Health, 7 Overlea Blvd., 7th Floor, Toronto, Ontario M4H 1A8
51. D. R. Brown, Isotopes Program Manager, Energy Research and Development, Department of Energy, Oak Ridge Operations, Post Office Box 2008, Oak Ridge, Tennessee 37831-6269
52. P. Butler, Sandia National Laboratories, Albuquerque, New Mexico 87185
53. E. D. Cagle, ORAU, 130 Badger Avenue, Post Office Box 117, Oak Ridge, Tennessee 37831-0117
54. R. B. Chitwood, U.S. Department of Energy, Office of Nuclear Energy, NE-48, Washington, DC 20545
55. J. A. Coleman, U.S. Department of Energy, Office of Nuclear Energy, Washington, DC 20545

56. Dave Collinson, Business Development Officer, 777 Bay Street, 27th Floor, Toronto, Ontario, Canada M5G 2C8
57. J. H. Dunlap, Lt. Col., USAF, BSC, Staff Health Physicist, USAF Radioisotope Committee, HQ AFOMS/SGPR, Brooks AFB, Texas 78235-5000
58. R. Ellefson, Mound Laboratories, 1 Mound Avenue, Post Office Box 3000, Miamisburg, Ohio 45342-3000
59. J. Gill, Mound Laboratories, 1 Mound Avenue, Post Office Box 3000, Miamisburg, Ohio 45342-3000
60. T. C. Hardy, Research Engineer, AFESC/RDCS, Tyndall AFB, Florida 32403

61-62. G. A. Jensen, Ph.D., Battelle Pacific Northwest Laboratories, Battelle Boulevard, Richland, Washington 99352

63-80. L. E. Leonard, Radioluminescent Program Coordinator, U.S. Department of Energy, Advanced Radiation Technology, EH-35, Washington, DC 20545

81. J. Mathur, U.S. Department of Energy, Office of Nuclear Energy, Washington, DC 20545
82. J. Miller, President, Safety Light Corporation, 4150-A Old Berwick Road, Bloomsburg, Pennsylvania 17815
83. H. Pressey, ORAU, 130 Badger Avenue, Post Office Box 117, Oak Ridge, Tennessee 37831-0117
84. C. Rencheller, Sandia National Laboratories, Albuquerque, New Mexico 87185
85. R. Ronchka, P. Eng., Section Head, Radioactive Isotopes, Ontario Hydro, 777 Bay Street, 27th Floor, Toronto, Ontario, Canada M5G 2C8

86-95. J. A. Tompkins, Engineer, Westinghouse Electric Corporation, Nuclear Waste Department, Valley Bank Center, 101 Convention Center Drive, Las Vegas, Nevada 89109

94-100. D. T. Travis, Director Airport/Port, Albert Whitted Airport, 1st Street and 8th Avenue, S.E., St. Petersburg, Florida 33701

101. M. Travis, State of Alaska, Department of Transportation and Public Facilities, 2301 Peger Road, Fairbanks, Alaska 99701
102. R. J. Walker, Licence Assessment Officer, Atomic Energy Control Board, Post Office Box 1046, Station "B", Ottawa, Canada K1P 5S9
103. R. J. Walko, Ph.D., Applied Technology Division 2526, Sandia National Laboratories, Albuquerque, New Mexico 87185
104. Office of Assistant Manager, Energy Research and Development, DOE-ORO, Post Office Box 2001, Oak Ridge, Tennessee 37831

105-114. Office of Scientific and Technical Information, Oak Ridge, Tennessee 37831