MARTIN MARIETTA ENERGY SYSTEMS LIBRARIES

3 4456 0316572 2

-AD _____
ORNL TM-11643

ornl

OAK RIDGE
NATIONAL
LABORATORY

MARTIN MARIETTA

CHARACTERIZATION OF ROCKET PROPELLANT COMBUSTION PRODUCTS

SUBTITLE:

DESCRIPTION OF SAMPLING AND ANALYSIS METHODS FOR ROCKET EXHAUST CHARACTERIZATION STUDIES

Interim Report

DOE Interagency Agreement No. 1016-1844-A1
Project Order No. 87PP8774

June 7, 1990

Principal Investigator: R. A. Jenkins
Primary Contributors: C. V. Thompson
T. M. Gayle
C. Y. Ma
B. A. Tomkins

Analytical Chemistry Division
Oak Ridge National Laboratory
P. O. Box 2008
Oak Ridge, Tennessee 37831-6120
(615) 576-8594

Mr. Lee Merrell
Chief. Acquisition Management Liaison Office
U.S.Army Biomedical Research and Development
Laboratory Fort Detrick
Frederick, Maryland 21701-5010

COR: Major John Young

OPERATED BY
MARTIN MARIETTA ENERGY SYSTEMS, INC.
FOR THE UNITED STATES
DEPARTMENT OF ENERGY

This report has been reproduced directly from the best available copy.

Available to DOE and DOE contractors from the Office of Scientific and Technical Information, P.O. Box 62, Oak Ridge, TN 37831; prices available from (615) 576-8401, FTS 626-8401.

Available to the public from the National Technical Information Service, U.S. Department of Commerce, 5285 Port Royal Rd., Springfield, VA 22161.
NTIS price codes—Printed Copy: A03 Microfiche A01

This report was prepared as an account of work sponsored by an agency of the United States Government. Neither the United States Government nor any agency thereof, nor any of their employees, makes any warranty, express or implied, or assumes any legal liability or responsibility for the accuracy, completeness, or usefulness of any information, apparatus, product, or process disclosed, or represents that its use would not infringe privately owned rights. Reference herein to any specific commercial product, process, or service by trade name, trademark, manufacturer, or otherwise, does not necessarily constitute or imply its endorsement, recommendation, or favoring by the United States Government or any agency thereof. The views and opinions of authors expressed herein do not necessarily state or reflect those of the United States Government or any agency thereof.

AD _____
ORNL TM-11643

PROJECT ORDER NO: 87PP7874

TITLE: CHARACTERIZATION OF ROCKET PROPELLANT COMBUSTION PRODUCTS

SUBTITLE: Description of Sampling and Analysis Methods For Rocket Exhaust Characterization Studies

PRINCIPAL INVESTIGATOR: R. A. Jenkins
PRIMARY CONTRIBUTORS: C. V. Thompson
T. M. Gayle
C. Y. Ma
B. A. Tomkins

CONTRACTING ORGANIZATION: U.S. Department of Energy
Oak Ridge Operations Office
P.O. Box 2001
Oak Ridge, Tennessee 37831-8622

REPORTED DATE: June 7, 1990

TYPE OF REPORT: Interim Report

SUPPORTED BY: U.S. ARMY BIOMEDICAL RESEARCH AND DEVELOPMENT LABORATORY
Fort Detrick, Frederick, Maryland 21701-5010

PREPARED FOR: Contracting Officer's Representative
U.S. Army Biomedical Research and Development Laboratory
Fort Detrick, Frederick, Maryland 21702-5010

MARTIN MARIETTA ENERGY SYSTEMS LIBRARIES
3 4456 0316572 2

DISTRIBUTION STATEMENT: Approved for public release: distribution unlimited

The findings in this report are not to be construed as an official Department of the Army position unless so designated by other authorized documents.

FORWARD

Opinions, interpretations, conclusions and recommendations are those of the author and are not necessarily endorsed by the U.S. Army.

_____ Where copyrighted material is quoted, permission has been obtained to use such material.

_____ Where material from documents designated for limited distribution is quoted, permission has been obtained to use the material.

_____ Citations of commercial organizations and trade names in this report do not constitute an official Department of the Army endorsement or approval of the products or services of these organizations.

_____ In conducting research using animals, the investigator(s) adhered to the "Guide for the Care and Use of Laboratory Animals," prepared by the Committee on Care and Use of Laboratory Animals of the Institute of Laboratory Animal Resources, National Research Council (NIH Publication No. 86-23, Revised 1985).

_____ For the protection of human subjects, the investigator(s) have adhered to policies of applicable Federal Law 45CFR46.

Roger A Jukes 9/11/90

PI Signature / Date

EXECUTIVE SUMMARY

A systematic approach has been developed and experimentally validated for the sampling and chemical characterization of the rocket motor exhaust generated from the firing of scaled down test motors at the US Army's Signature Characterization Facility (ASCF) at Redstone Arsenal in Huntsville, Alabama. The overall strategy was to sample and analyze major exhaust constituents in near real time, while performing off-site analyses of samples collected for the determination of trace constituents of the particulate and vapor phases. Initial interference studies were performed using atmospheric pressure burns of 1 g quantities of propellants in small chambers at Oak Ridge National Laboratory. Carbon monoxide and carbon dioxide were determined using non-dispersive infrared instrumentation. Hydrogen cyanide, hydrogen chloride, and ammonia determinations were made using ion selective electrode technology. Oxides of nitrogen were determined using chemiluminescence instrumentation. Airborne particulate mass concentration was determined using infrared forward scattering measurements and a tapered element oscillating microbalance, as well as conventional gravimetry. Particulate phase metals were determined by collection on Teflon membrane filters, followed by inductively coupled plasma and atomic absorption analysis. Particulate phase polynuclear aromatic hydrocarbons (PAH) and nitro-PAH were collected using high volume sampling on a two stage filter. Target species were extracted, and quantified by gas chromatography/mass spectrometry (GC/MS). Vapor phase species were collected on multi-sorbent resin traps, and subjected to thermal desorption GC/MS for analysis.

TABLE OF CONTENTS

Forward 1

Executive Summary 3

Table of Contents 5

Figure List 7

Table List 7

I. Introduction 9

A. Introduction/Background 9

B. Purpose 9

II. Overview of Sampling and Analysis Plan 9

III. Real-Time Monitoring 12

A. Physical 12

B. Chemical 13

C. Interference Studies 17

D. Data Acquisition 18

E. Colorimetric Detector Tubes 19

IV. Off-Line Analysis 20

A. Particulate Phase Organic Species 20

B. Particulate Phase Inorganic Species 21

C. Particle Size Distribution 22

D. Organic Vapor Phase Constituents 22

References 25

Distribution List 27

FIGURE LIST

Figure

1. Schematic Diagram of Sampling and Analysis Train 11

TABLE LIST

Table

1. Propellant Constituent Interference Studies
Response of Monitor to Test Gases 18

I. INTRODUCTION AND PURPOSE

A. Introduction/Background

This effort arose from a need of the US Army's Biomedical Research and Development Laboratory (USABRDL) to understand more completely the potential adverse health impacts of the use of hand-held anti-tank weapon systems. There currently exists little information as to the components of the exhaust products from the launch motors of these systems. Computer models which predict the components using thermodynamic calculations are directed toward providing estimates of thrust and other physical parameters. The accuracy of such models for the estimation of the levels of potentially toxic exhaust products has not been verified. This project was undertaken to determine experimentally the actual exhaust product composition from four different types of test motors, and compare the results with predictions generated by the most sophisticated thermodynamic model available. To the extent possible, the data from the experimental studies would be used to refine the model.

B. Purpose

The purpose of this report is to describe the approach and procedures used for the sampling and chemical characterization of the rocket motor exhaust generated from the firing of scaled down test motors at the US Army's Signature Characterization Facility (ASCF) at Redstone Arsenal in Huntsville, Alabama. Note that the report is not intended as a detailed, step-by-step operating manual. Rather, a descriptive text is provided, and reference is made to the manufacturer's instrumental operational manual for detailed procedures. The sampling and analytical strategy was developed as a result of both laboratory based studies conducted at ORNL, and field experiments at the ASCF.

II. OVERVIEW OF SAMPLING AND ANALYSIS PLAN

The overall strategy of the sampling/analysis plan was to determine both the major and minor constituents, with special regard for those compounds expected to adversely affect human health and performance. The purpose of the effort was to afford both a reasonably complete characterization of the exhaust products, plus develop a data base which could provide for a comparison with those concentration projections from

computer models. To the extent possible, gas phase and/or reactive species, along with particle mass concentration measurements, were to be determined in near real time. For those constituents for which real-time analysis was not practical, vapor or particle phase samples were collected on appropriate media, and determined at a later date.

Presented in Figure 1 is a schematic diagram of the sampling/analysis train used for these studies. The sampling train and on-line monitoring array was developed at ORNL and transported to Redstone Arsenal as needed. The system was assembled on-site prior to each three-to-four-day test series of a particular rocket motor type. All components of the system were transported from ORNL to ASCF prior to each test series in a single 12 passenger van. Support equipment such as calibration gases, flow standards, electronic test meters, power distribution and conditioning apparatus, etc., was included to make the system as self-sufficient as practical. Tables, support materials, and other temporary furniture and mounting hardware were also carried to ASCF for each test series.

Aspects of the sampling train are described in detail below. Briefly, a 1" diameter stainless steel pipe about 20" in length acted as the sample introduction manifold. As close as practical to the outside of the chamber wall was mounted the connecting fittings to the cascade impactor, metals filter, and the BRDL HCl analyzer. The impactor and metals filter were connected to the fittings, with pieces of 0.25" o.d. Teflon tubing a few inches in length. The HCl analyzer was connected with similar tubing ca. 48" in length. In order to protect gas phase analyzers from becoming contaminated with particulates, a large MSA cartridge filter (Ultra Filter Type H, Part No. 95302, Mine Safety Appliance Co., Pittsburgh, PA) was placed in the sampling line. In order to minimize cross reactions among the exhaust constituents during the traverse through the sampling train, the cumulative flow through the system was fairly high. Typically, sample delivery from the chambers in which the rocket motors were fired to the inlet of the most remote filter, sensor, or trap was less than 5 seconds.

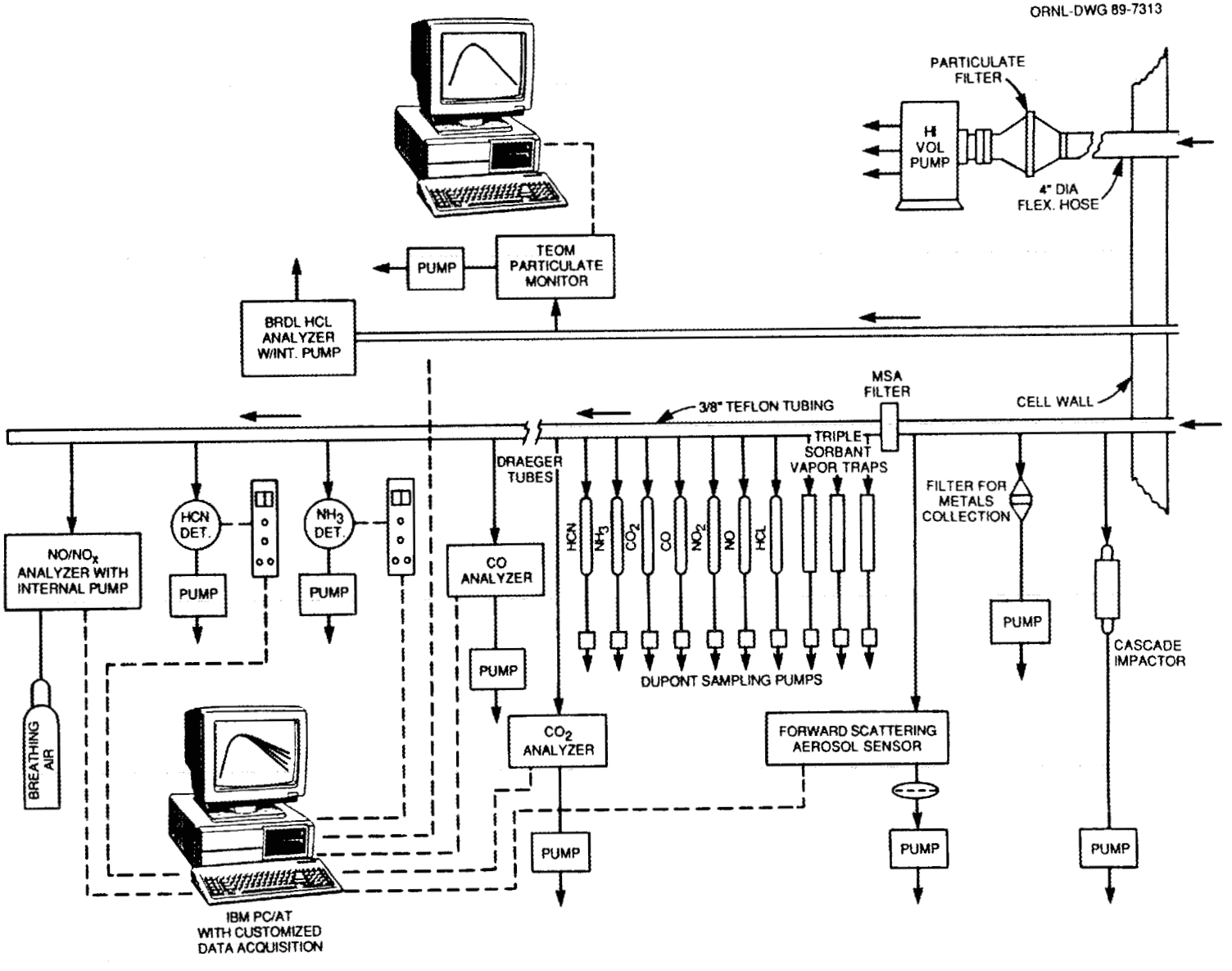

FIGURE 1: Schematic Diagram of Sampling and Analysis Train.

III. REAL-TIME MONITORING

A. Physical

1. Particulate Concentrations by Forward Scattering Measurements - Particulate concentrations were initially determined using a commercially available optical instrument based on the forward scattering of an 860 nanometer wavelength infrared beam. The instrument, known as the RAS-1 and manufactured by MIE, Inc. (Bedford, Massachusetts 01730) was modified slightly at ORNL for flow-through operation. Operation of the instrument has been described in detail elsewhere [1]. A suitable control/readout module was developed to interface the signal to recorders and/or computers. A usable range of 0-100 mg/m^3 proved practical. Sampling flow rate through the unit was 0.5 L/min and was provided by a DuPont P4000 sampling pump.

   Field calibration of the unit was not practical. However, calibration prior to each field trip was carefully made at ORNL employing the sampling of combustion derived aerosols from closed chambers with comparisons to filter pad weights.

   While use of the RAS-1 was relatively simple, and the instrument quite inexpensive, the data obtained was known to be subject to certain errors. As with any optical aerosol instrument, the measurements were subject to variations in particle size as well as shape. The much more accurate and versatile tapered element oscillating microbalance (TEOM) was employed as the primary particulate monitor in later tests.

2. Particulate Concentrations by Microgravimetric Techniques - The Tapered Element Oscillating Microbalance (TEOM) Series 1200 Ambient Particulate Monitor, manufactured by Rupprecht and Patashnick Co., Inc. (Albany, NY), is designed for near real-time analysis of total particulate matter (TPM) concentrations. A Teflon-coated glass fiber filter used for the collection of particulate matter is placed on the tip of a hollow tapered element which oscillates at a measured frequency. A known air flow (3.0 L/min for propellant exhaust sampling) is established through the filter and element, and

as particulate matter accumulates on the filter, the change in frequency of the elemental oscillation indicates the loading of the filter per unit time. The operation of the TEOM has been described in detail elsewhere [2,3]. The instrument housing, sample inlet tube and microbalance assembly are maintained at a temperature several degrees above the ambient temperature (40°C for propellant exhaust sampling) to insure stable instrumental response. One side effect of this increased temperature is the tendency for the volatile components of aerosols which have been deposited on the filter to vaporize, yielding lower than actual particle concentrations. However, this phenomenon will affect any instrument which relies on a gravimetric change to generate a response. An absolute calibration of the TEOM Particulate Monitor can be effected by placing a particle of a known weight on the filter and observing the change in frequency of the instrument. This kind of calibration is not possible with many particulate monitors.

Data acquisition and display and instrument control for the TEOM Particulate Monitor were conducted on an AT-compatible personal computer, with storage of data ranging from once per second to once per 27 hours: data from rocket propellant analyses was stored once per second. Data displays on screen are scaled to include the expected maximum value for TPM concentration (as high as 80 mg/m^3 for propellant exhaust sampling). Data files are generated in an ASCII *.PRN format for importation into Lotus 1-2-3 software, where a macro supplied by the manufacturer reduced the data to an easily usable spreadsheet form. Particulate Monitor manuals detail the set-up and operation of the instrument and computer software. Calibration of the instrument is performed by the manufacturer and is not necessary for normal operation.

B. Chemical

Real-time chemical analyses were conducted using state-of-the-art commercially available instrumentation. In the case of hydrogen chloride (HCL) measurement, a system developed by the US Army Biomedical Research and Development Laboratory (USABRDL) proved quite superior to the commercially available unit and was the instrument of choice for all HCL measurements on-site. In all cases, output voltage signals from the various instruments were fed to high speed analog

recorders in early testing and later incorporated to a computer-based data acquisition system.

1. Carbon Monoxide (CO) - The Beckman Model 865 (Beckman Industrial Division, Rosemount Corporation, La Habra, California) nondispersive double beam infrared analyzer (NDIR) proved to be an accurate and trouble free carbon monoxide monitor. Its dual ranges of 0-100 and 0-1000 PPM CO were conveniently adequate for our purposes. The excellent rejection ratio (29,000:1) against CO_2 and H_2O vapor and other possible interfering gases proved highly advantageous in this application. The operation of the NDIR analyzer has been described in detail elsewhere [4]. Field calibration of the unit was made prior to each day's runs using bottled gases of certified concentration on each of the two ranges.

   The sample flow through the CO analyzer was provided by a small multiple inlet vacuum pump common to other analyzers. The pump, a Neptune Model 2A (Neptune Products, Dover, New Jersey 07801) was used with four inlet rotameter/controls to provide adjustable flow rates through four individual instruments (CO, CO_2, NH_3 and HCN). Flow through the CO monitor was maintained at 0.5 L/min. This provided an overall instrument response of 90% full scale in 20 seconds.

2. Carbon Dioxide (CO_2) - Measurement of CO_2 levels also was performed by a nondispersive infrared analyzer; however a less expensive single beam instrument, the Beckman Model 870-123, proved adequate. The instrument provided ranges of 4000, 8000, and 12,000 PPM CO_2. The operation of the analyzer has been described in detail elsewhere [5]. Prior to each day's tests, calibration was made using certified zero and span gases. A sample flow rate of 0.5 L/min was maintained using the pump assembly previously described. Response of 90% full scale in 15 seconds was attained.

3. Oxides of Nitrogen (NO_x) - Oxides of nitrogen were monitored using the chemiluminescent principle as incorporated in the Beckman Model 951A NO/NOx analyzer. In this instrument, nitric oxide (NO) present in the

sample is reacted with ozone to produce electronically excited nitrogen dioxide (NO_2^*) molecules. As these revert to ground state, photons are released and measured by a photomultiplier and associated electronic circuitry. When it is desired to measure total oxides of nitrogen (NO + NO_2), the sample is first routed through a converter where NO_2 in the sample is converted to NO. The native NO remains unchanged. The sample stream, now containing both the native NO and the NO from the conversion of the nitrogen dioxide, is routed through the ozone reactor and photon measurement system. Thus, the response is referred to as total oxides of nitrogen (NO_x). This particular instrument has seven ranges from 0-10 PPM to 0-10,000 PPM. Field calibration of the unit was made prior to each day's experiments using bottled gas standards containing both NO and NO_2.

Flow through the instrument was provided by an internal sampling pump operating at about 2.0 liters/minute. Response time (90%) of the instrument as used at the ASCF was approximately 30 seconds. An external 30 psi air supply is required for the instrument and this was provided in all tests by bottled breathing air. The operation and use of the instrument has been described in detail elsewhere [6].

4. Ammonia (NH_3) - The ammonia analyzer was a Sensidyne Type 7010671-1 Toxic Gas Sensor (Sensidyne, Inc., Largo, Florida) with Sensidyne Model 1000 Readout/Controller. The heart of this system is a small controlled potential electrolysis cell in which the gas to be measured diffuses into the cell through a permeable polytetrafluoroethylene (PTFE) membrane. The internal cell composition and electrolyte are designed to specifically respond to the selected gas (NH_3 in this case), causing a detectable potential response.

   The range of this particular instrument was 0-100 ppm NH_3. However, more sensitive ranges are selectable. Interfering gases, as stated by the manufacturer and tested at ORNL, were very minor to nonexistent for the species encountered in the rocket exhausts characterized in these studies. Response time was stated by manufacturer as 20 seconds (90% full scale). However, response measurements made both at ORNL and at the ASCF at Redstone Arsenal proved that a 40-60 second response

time was more realistic. Twice daily calibration of the instrument was performed in the field using the manufacturer's "ampoule calibration kit." In this kit, an ampoule of an accurately known quantity of NH_3 gas is broken and the gas dispersed in a known volume of air in a container designed to fit snugly around the sensor. The gas concentrations within the container were verified at ORNL several times prior to field use of this calibration method. Levels of 15 PPM and 30 PPM were used in routine calibration. The operation of the ammonia monitor has been described in detail in the manufacturer's operating manual [7,8].

Electrode replacement was necessary several times during the course of these studies, probably due to routine aging of the internal electrolyte solution and/or electrode degradation. Electrode assembly rebuilding using the manufacturer's replacement membranes and electrolyte solutions was frequently sufficient rather than entire replacement of the assembly.

5. Hydrogen Cyanide (HCN) - The HCN Analyzer (Sensidyne Type 7010671-3) was in all respects similar to the NH_3 unit just described, except that the internal cell construction was designed to respond exclusively to HCN. Calibration levels of 10 ppm and 20 ppm were used in the field and as with the NH_3 unit, were verified twice daily. The operation of the instrument has been described in detail elsewhere [7,9].

6. Hydrogen Chloride (HCl) - An experimental prototype HCl monitor developed by Dr. Steve Hoke of USABRDL was used to measure HCl concentrations (combined vapor phase and particulate phase associated) [10]. The instrument samples air at a flow rate of 1 L/min, with the air being mixed in a circular tubing chamber with a 0.1 M $NaNO_3$ trapping solution flowing at approximately 4 mL/min, which scrubs the HCl from the air stream. The HCl, now in solution, is transported past a silver micro-electrode which senses the chloride ions and generates an electrical signal which is a log function of the chloride ion concentration (a correction factor is included for any variation in the air and trapping solution flow rates). The instrument is calibrated by replacing the

trapping solution flow with a flow of NaCl standard solutions (standard concentrations are selected based on the projected levels of HCl likely to be encountered). Signal output voltages range from 0 - 1 V. If HCN is present in the atmosphere sampled, it will generate a response on this instrument at approximately a one-to-one ratio (i. e., 1 ppm of HCN will appear as 1 ppm of HCl - see below).

An instrument for detection of HCl vapors in air, the TGA-400 from CEA Instruments, Inc., was purchased and evaluated for this project. Due to repeated failure of the instrument to perform adequately, it was rejected for use as an HCl analyzer. Some of the difficulties associated with instrument performance were low response and no response to test atmospheres, variability of response caused by changes in relative humidity, and slow instrument response.

C. Interference Studies

A considerable amount of effort was placed into the determination of potential interferences with the real-time analyzers from the other constituents likely to be present in the exhaust atmosphere. The strategy which was employed involved determining the responses of the various analyzers to known concentrations of the target analyte gases in the presence of known levels of the other gases. For example, the response to 64 ppm of ammonia was determined in the presence of 77 ppm HCN, 600 ppm NO_x, 900 ppm CO, etc. Studies were performed in a 0.4 m^3 chamber at ORNL, generally both with and without the presence of small quantities of exhaust constituents produced by burning 1 g samples of the propellant formulation at atmospheric pressure.

In Table 1 are listed the results of the interference studies. In general, the various real-time monitors exhibited few interferences from the other gases. The major exception to this was the BRDL HCl monitor. For it, the most significant interferences were from ammonia and hydrogen cyanide. A detailed study of the degree of interference was performed for these two compounds over a range of about 10 - 90 ppm. A least squares analysis of the response of the HCl analyzer yielded slopes of 0.97 for HCN and 0.057 for ammonia. In other words, the HCL analyzer responds about as well to HCN as it does to HCl. This is not particularly

surprising, considering the fact that the monitor uses an ion selective electrode (ISE) as its sensing system, and that ISE is known to be sensitive to CN^- anions. The monitor's response to ammonia was considerably smaller. The monitor also exhibited a small response to oxides of nitrogen. Interestingly, the NO_x monitor exhibited a small response to HCl. These interferences were taken into account when reporting observed concentrations.

TABLE 1

Propellant Constituent Interference Studies
Response of Monitor to Test Gases
(Apparent Concentrations in ppm)

	Monitor					
Test Gas	NH_3	HCN	NO_X	CO	CO_2	HCl
NH_3	64	0	0	0	0	3.6
HCN	0	77	0	0	0	75
NO_X	0	0	NO: 585 NO: 95	0	0	0.7
CO	0	0	0	916	0	0
CO	0	0	0	0	1870	0
HCl	0	0	<1	0	0	73

D. Data Acquisition

The real-time acquisition and display of data for the NO_x, HCN, HCl, NH_3, CO, CO_2, and RAS forward scattering particulate sensor was conducted with the Computer-based Oscillograph and Data Acquisition System (CODAS) software from DATAQ Instruments, Inc., on an IBM AT personal computer equipped with a 12-bit analog-to-digital (A/D) interface board made by Data Translation, Inc. Instrumental data was acquired and displayed on up to eight channels

simultaneously, at a rate approximating 3 points per second per channel. Screen displays of data were scaled for the output voltages from the instruments used for analysis. Instrumental outputs ranged from 0 - 10 mV to 1 - 5 V. Input voltages to the A/D board are limited by the type of board used. The maximum range for the Data Translation board is +/- 10 V; however, other A/D boards can be used with the CODAS software. Raw data files, which were stored in a compressed CODAS format, were converted by the software to ASCII *.PRN files for importation into Lotus 1-2-3. Data was then converted from voltages to concentrations in ppm or mg/m^3 and averaged using a 50 point (approximately 17 seconds) Savitsky-Golay smoothing routine to eliminate signal noise.

E. Colorimetric Detector Tubes

In order to provide a back up for the on-line analyzers, colorimetric indicator tubes (National Draeger, Inc., Pittsburgh, Pennsylvania) were used for the selected gas measurements. In addition to the tube measurements indicated in Fig. 1, tubes for H_2S and SO_2 were employed for certain tests. These tubes are normally used with a hand pump for atmospheric sampling. They may, however, be advantageously used with personal sampling pumps where the sampling rate and duration are carefully measured. The six tubes shown in Fig. 1 were connected to individually calibrated sampling pumps (DuPont Alpha 2 and DuPont P-4000, DuPont Company Instrument Systems, Kennett Square, Pennsylvania) and operated for exactly ten minutes at sampling rates of 100 mL/minute or 50 mL/minute, depending on the range of each individual tube. The Draeger tubes were chosen because of their low pressure drop at the specified flow rate. Their specificity for the target compound is typically very good, and possible interferences are well documented by the manufacturer.

For ease of use and deployment, all the Draeger tubes with their associated pumps as well as the triple sorbent traps and pumps were mounted on a 3 ft x 6 ft board. A stainless steel tube manifold with quick connect tube fittings was mounted at the top of the board. Rapid connection of the unit to the overall sampling train as well as change of individual tubes and pumps was facilitated. Flow rates through the Draeger tubes were carefully checked prior to each test run using a volumetric standard (Buck model M-5 primary gas flow calibrator, A.P. Buck Inc., Orlando, FL.) .

Pump calibration was crucial to the accuracy of the measurements. Careful volumetric determinations were made prior to and subsequent to each test or run. Volumes were checked using a Buck Model M-5 Primary Gas Flow Calibration (A. P. Buck, Inc., Orlando, Florida). During operation, all pumps were started immediately prior to a test firing and were allowed to run exactly ten minutes. The pump flow rate settings were such that the volume of air drawn through each tube made the tube direct reading in average concentration over a 10 minute sampling time. That is, if the stain reached the 10 ppm line over the course of the 10 minute sampling period, that meant that the concentration in the chamber averaged 10 ppm during that time period.

IV. OFF-LINE ANALYSIS

A. Particulate Phase Organic Species

1. Sampling - The collection of useful quantities of particulate matter was facilitated using a conventional high-volume air sampler equipped with an 8 in. x 10 in. inlet filter holder. The Staplex Model TFIA (Staplex Company, Air Sampler Division, Brooklyn, New York) High Volume Sampler equipped with an SH-810 inlet filter holder proved satisfactory. The sampler was connected to the chamber through a 24" length of 4" diameter flexible plastic hose. The hose was connected to the 8" x 10" filter holder with an adapter made from stainless steel. After initial tests produced premature loading of the sub-micron filter media (Pallflex Type T60A20, Pallflex Products Corporation, Putnam, Connecticut), it was decided to use a two stage filter by placing a 10-15 micron filter (Pallflex T015A) directly ahead of the sub-micron filter and operating the sampler at a constant flow rate of 0.85 m^3/min for a period of 20 minutes. (Both types of filters were fabricated from Teflon-coated glass fibers, to minimize transformation of retained constituents.) In this manner, several hundred milligrams of particulate matter were collected after each test. The usual procedure was to operate the sampler for the twenty minute period, beginning ten minutes after firing of the motor, at which time gas sampling was complete. (Had particulate sampling been initiated immediately after the motor firing, a large fraction of the chamber contents would have been exhausted through the high volume sampler, and the concentrations of the gas phase constituents would have been artificially

low.) A small rotameter built into the Staplex sampler was found to be reproducible and sufficient for verifying field flow rates. The unit was carefully calibrated prior to each series of tests against a flow rate standard traceable to National Bureau of Standards (NBS). Manual control of the flow rate was accomplished by operating the sampler motor from a variable transformer (Variac). During the 20 minute sampling period, the voltage was adjusted frequently to maintain the 0.85 m^3/min flow, as particulates collected on the two stage filter. Filters were carefully weighed on a laboratory balance (Sartorius Model 1205, Sartorius Corporation, Bohemia, New York) before and after collection to quantify material collected. Used filters were carefully wrapped in solvent-cleaned aluminum foil for storage and transport to ORNL for analysis.

2. Analysis - The collected particulate phase organics were determined as follows: First, the samples were spiked (in a dropwise manner) with a solution containing appropriate amounts of perdeuterated chrysene, benzo(a)pyrene (BaP), and 1-nitropyrene. These were used as surrogate recovery standards and to verify retention-time behavior. Next, the filters were shredded with a knife, and thrice extracted ultrasonically with 100-mL portions of methylene chloride for 3 minutes. The solvent portions were pooled and evaporated to near dryness on a rotary evaporator. The remaining extract was transferred to a crimp-top vial, evaporated to dryness, and taken up in 50 μL of methylene chloride. The resulting concentrate was analyzed by GC/MS with a 25-m DB-5 coated fused silica capillary column. Single ion monitoring and confirmatory-ion monitoring were performed for each of the particle-phase polynuclear aromatic hydrocarbons (PAH) (which were quantitated). The analysis temperature started with 80°C for four minutes and was then programmed from 80°C to 280°C at 8°/min. Each resulting peak of interest was selected by the operator and quantitated by comparing integrated response with that of an external standard.

B. Particulate Phase Inorganic Species

1. Sampling - A 0.5 micron polytetrafluoroethylene (PTFE) 47-mm filter (Millipore FHLP-047, Millipore Corp., Bedford, MA) was used to collect each sample for metals analysis at ORNL. The filter holder was a BGI Type F7

(BGI, Inc., Waltham, MA) with an internal support screen. The sampling rate, using a Cole Parmer Model N-07061-40 vacuum pump, was 14 liters/minute over the 10 minute period. Sampling flows were checked before and after each run with Buck Model M-30 Primary Gas Flow Calibrator (A.P. Buck, Inc., Orlando, Florida). Filter samples were carefully folded and inserted in pre-cleaned glass vials for subsequent analysis upon return to ORNL.

2. Analysis - Metals were analyzed by digesting the filters with nitric acid and perchloric acid, and subjecting them to conventional analysis using either inductively coupled plasma spectroscopy or by atomic absorption spectroscopy (EPA Methods 239.1 and 220.1) [11]. In both cases, quantitation involved use of external standards.

C. Particle Size Distribution

Representative filter samples of the particulates were collected from the atmosphere of the ASCF and particle size and concentration were measured during each ten minute period following rocket motor ignition. A small, low-volume seven-stage cascade impactor (In-Tox Type 02-100 Mercer Impactor, In-Tox Products, Albuquerque, NM) provided an approximate size distribution of the aerosol collected for the ten minute period after detonation. This impactor operated at 1.0 liter/minute; the samples were drawn from the main sample tube as close to the cell as possible. Particles were permitted to impact on glass substrates, and relative loading levels were estimated by optical comparison.

D. Organic Vapor Phase Constituents

1. Sampling - A triple sorbent trap developed by ORNL was employed for the collection of the organic vapor phase constituents. Traps were constructed from 13 cm x 12 mm o. d. stainless steel tubing filled with a 4 cm plug of Tenax, 4 cm of Carbotrap, and 2 cm of Ambersorb XE-340. DuPont P-4000 personal sampling pumps were used to pull the vapor phase samples through these tubes. The pressure drop through the tubes was greater than that for which flow control can be maintained by the P-4000. Thus, the pumps were simply set to operate at maximum capacity and precise calibration of flow rate

was made before and after a given ten minute run. The flow rates were checked before and after exposure of traps using a mass flowmeter (Sierra Model 821-10-1(10)-DC, Sierra Instruments, Inc., Carmel Valley, California). The flow rates for individual traps ranged from 1.5 to 2.9 L/min, allowing an average of 20 L per sample to be collected within the ten minute sampling period. Prior to use, the traps were purified by desorbing them for several hours at 270° C with helium, at a flow of 20 mL per minute. Desorption flow is always in the direction of the Ambersorb being the upstream end, while collection flow is in the reverse direction. Collection efficiency experiments conducted with these traps indicate less than 5% breakthrough of such volatile organics as isoprene and methylene chloride for the above-mentioned sample volumes.

2. Analysis - Trap contents were analyzed by thermal desorption gas chromatography/mass spectrometry (GC/MS) as follows: First, the tubes were purged of adsorbed water by drawing through the traps 1 L of helium at a rate of 100 mL per minute in the same direction as sampling flow. Next, the traps were reversed, placed in a tube oven held at 243° C, and purged with helium at a rate of 12 mL/min for 20 minutes, with the flow direction opposite to that of the sampling direction. The effluent from the traps was collected in a 46 cm x 0.50 mm i.d. stainless steel cryoloop held at liquid nitrogen temperatures at the head of the GC column. The liquid nitrogen was removed and the temperature held at 25°C for 16 minutes, and then programmed from 25°C to 280°C at a rate of 8° per minute. A Hewlett-Packard Model 5895 GC/MS was used, with a 25 m DB-5 fused silica capillary column. One of the trap samples was analyzed under chemical ionization conditions in order to obtain molecular ion data. The remaining samples were analyzed by conventional electron impact ionization, and quantities of compounds were determined with the aid of external standards.

REFERENCES

1. MIE, Inc. "Real Time Aerosol Sensor Model RAS-1 Instruction Manual," Bedford, Massachusetts

2. Rupprecht & Patashnick Co. Incorp., "TEOM Mass Monitoring Instrumentation, TEOM Software Manual (TP3), (Teomplus™ Software Version 3)," Albany, NY 12203

3. Rupprecht & Patashnick Comp., Incorp., "TEOM Series 1200 Ambient Particulate Monitor TEOM Hardware Manual (Teomplus™ Software Version 3)," Albany, NY 12203

4. Beckman Industrial Corp., "Model 864/865 Non-Dispersive Infrared Analyzer," La Habra, CA 90631

5. Beckman Industrial Corp., "Model 870 Non-Dispersive Infrared Analyzer," La Habra, CA 90631

6. Beckman Instruments, Inc., "Model 951A NO/NOx Analyzer," Fullerton, CA 92634

7. Sensidyne Inc., (Part One of Two Parts) "Operation and Service Manual - Sensidyne Model 1000 Controller," Largo, Florida 33543

8. Sensidyne Inc., (Part Two of Two Parts) "Operation and Service Manual "Ammonia" - Sensidyne Gas Alert," Largo, Florida 33543

9. Sensidyne Inc., (Part Two of Two Parts) "Operation and Service Manual "Hydrogen Cyanide," Largo, Florida 33543

10. Steven Hoke, "Operation Procedure for BRDL HCl Monitor," US Army Biomedical Research and Development Laboratory, Ft. Detrick, Frederick, MD, personal communication.

11. Environmental Protection Agency, "Methods for Chemical Analysis of Water and Wastes," EPA-600/4 - 79 - 020, March, 1983, Methods 239.1 and 220.1

DISTRIBUTION LIST	No of Copies
Commander U.S. Army Environmental Hygiene Agency ATTN: HSHB-MO-A Aberdeen Proving Ground, MD 21010	1
Commander U.S. Army Environmental Hygiene Agency ATTN: Library Aberdeen Proving Ground, MD 21010	1
Commander U.S. Army Missile Command ATTN: Propulsion Directorate, RDEC/Mr. L. B. Thorn Redstone Arsenal, AL 35898	1
Commander U.S. Army Medical Research and Development Command ATTN: SGRD-PLC Fort Detrick Frederick, MD 21702-5012	1
Commander U.S. Army Medical Research and Development Command ATTN: SGRD-RMI-S Fort Detrick Frederick, MD 21702-5012	1
Defense Technical Information Center ATTN: DTIC-FDAC Cameron Station Alexandria, VA 22304-6145	1
Commander U.S. Army Biomedical Research and Development Laboratory ATTN: SGRD-UBZ-RA (Ms. Connor) Fort Detrick Frederick, MD 21702-5010	2
Commander U.S. Army Biomedical Research and Development Laboratory ATTN: SGRD-UBG-O (MAJ Young) Fort Detrick Frederick, MD 21701-5012	26

DISTRIBUTION LIST (Cont'd)	No of Copies
Central Research Library Bldg. 4500-N, MS-6286 Oak Ridge National Laboratory P. O. Box 2008 Oak Ridge, TN 37831-6286	1
Document Reference Section Bldg. 9711-1 Oak Ridge National Laboratory P. O. Box 2009 Oak Ridge, TN 37831	1
Laboratory Records Bldg. 4500-N, MS-6285 Oak Ridge National Laboratory P. O. Box 2008 Oak Ridge, TN 37831-6285	1
ORNL Patent Office Bldg. 4500-N, MS-6258 Oak Ridge National Laboratory P. O. Box 62 Oak Ridge, TN 37831	1
T. M. Gayle Bldg. 4500-S, MS-6120 Oak Ridge National Laboratory P. O. Box 2008 Oak Ridge, TN 37831-6120	1
M. R. Guerin Bldg. 4500-S, MS-6120 Oak Ridge National Laboratory P. O. Box 2008 Oak Ridge, TN 37831-6120	10
R. A. Jenkins Bldg. 4500-S, MS-6120 Oak Ridge National Laboratory P. O. Box 2008 Oak Ridge, TN 37831-6120	10
C. Y. Ma Bldg. 4500-S, MS-6120 Oak Ridge National Laboratory P. O. Box 2008 Oak Ridge, TN 37831-6120	1

DISTRIBUTION LIST (Cont'd)	No of Copies
Mr. J. A. Reafsnyder Energy Research and Development U.S. Department of Energy Oak Ridge Operations P. O. Box 2008 Oak Ridge, TN 37831-6269	1
C. V. Thompson Bldg. 4500-S, MS-6120 Oak Ridge National Laboratory P. O. Box 2008 Oak Ridge, TN 37831-6120	1
B. A. Tomkins Bldg. 4500-S, MS-6120 Oak Ridge National Laboratory P. O. Box 2008 Oak Ridge, TN 37831-6120	1
Office of Scientific and Technical Information P.O. Box 62 Oak Ridge,TN 37831	12