ornl

ORNL/TM-11288/R1

OAK RIDGE
NATIONAL
LABORATORY

MARTIN MARIETTA

Comprehensive Self-Assessment and Upgrade Program Progress Report for the Period January 1 to June 30, 1989

K. H. Lin
P. Standifer
V. C. A. Vaughen

OPERATED BY
MARTIN MARIETTA ENERGY SYSTEMS, INC.
FOR THE UNITED STATES
DEPARTMENT OF ENERGY

This report has been reproduced directly from the best available copy.

Available to DOE and DOE contractors from the Office of Scientific and Technical Information, P.O. Box 62, Oak Ridge, TN 37831; prices available from (615) 576-8401, FTS 626-8401.

Available to the public from the National Technical Information Service, U.S. Department of Commerce, 5285 Port Royal Road, Springfield, VA 22161.
NTIS price codes—Printed copy: A03 Microfiche copy: A01

This report was prepared as an account of work sponsored by an agency of the United States Government. Neither the United States Government nor any agency thereof, nor any of their employees, makes any warranty, express or implied, or assumes any legal liability or responsibility for the accuracy, completeness, or usefulness of any information, apparatus, product, or process disclosed, or represents that its use would not infringe privately owned rights. Reference herein to any specific commercial product, process, or service by trade name, trademark, manufacturer, or otherwise, does not necessarily constitute or imply its endorsement, recommendation, or favoring by the United States Government or any agency thereof. The views and opinions of authors expressed herein do not necessarily state or reflect those of the United States Government or any agency thereof.

ORNL/TM-11288/R1

Chemical Technology Division

COMPREHENSIVE SELF-ASSESSMENT AND UPGRADE PROGRAM PROGRESS REPORT FOR PERIOD JANUARY 1 TO JUNE 30, 1989

K. H. Lin
P. Standifer*
V. C. A. Vaughen

Date Published – November 1989

Oak Ridge National Laboratory
Oak Ridge, Tennessee 37831-6285
operated by
Martin Marietta Energy Systems, Inc.
for the
U.S. Department of Energy
under contract DE-AC05-84OR21400

*TENERA Operating Company, L. P., Knoxville, TN.

CONTENTS

PAGE

ABSTRACT. v

ACRONYMS vii

MEMBERSHIP OF ISSUE EVALUATION COMMITTEE. viii

1. INTRODUCTION. 1

   1.1 THE COMPREHENSIVE SELF-ASSESSMENT AND UPGRADEPROGRAM (CSAUP). 1

2. GENERAL SELF-ASSESSMENT PLAN. 2

3. DOE/TSA PERFORMANCE OBJECTIVES AND CRITERIA FOR CHEM TECH. 5

4. CHEM TECH SELF-EVALUATION. 7

5. OTHER REVIEW/AUDIT ACTIVITIES. 8

6. PRIORITIZATION OF ACTION PLANS. 9

7. GENERAL ASSESSMENT OF TSA READINESS. 13

APPENDIX A. BACKGROUND AND BRIEF HISTORY OF CHEM TECH. 25

APPENDIX B. PERFORMANCE OBJECTIVES AND CRITERIA FOR RADIATION PROTECTION IN CHEM TECH. 31

APPENDIX C. RECONCILIATION OF ACTIONS/FINDINGS FROM TSA-TYPE REVIEWS. 50

ABSTRACT

The philosophy and practice in managing and conducting business in nuclear industry in general, and in DOE facilities in particular, have been changing rapidly in recent years. Strong emphasis has been placed on organization, training, compliance, and documentation in safety and quality of operations. This is reflected in the development of the Technical Safety Appraisal (TSA) procedures by DOE for formal evaluation of the DOE facilities.

Awareness of the rapidly changing regulatory environment and the TSA activities led the Chemical Technology Division (Chem Tech) to initiate a Comprehensive Self Assessment and Upgrade Program (CSAUP) in January 1989, based on four key elements derived from the HFIR restart experience. These key elements include:

1. perform serious self-evaluation using performance-based objectives and criteria,
2. have independent reviews of operations,
3. ensure that criteria exist for justifying continued operation, and
4. have a process available for addressing problems as they arise and for tracking their resolutions.

This report presents the progress made in addressing the key elements listed above during the period January-June, 1989. In essence, the actions to address the first key element included (a) preparation of a general self-assessment plan, (b) development of Chem Tech-specific TSA performance objectives and criteria (POC) based on the DOE/TSA-POC, and (c) systematic self-evaluation of the Chem Tech radiochemical processing facilities and operating practices against these POC. Regarding the second key element, there have been evaluations of Chem Tech facilities and operations by four different pre-TSA inspection/auditing teams; all except one were from outside of ORNL.

Preparation of risk assessment documentation for Chem Tech facilities was among the actions addressing the third key element. The fourth key element is being implemented through the Chem Tech Office of Safety and Operational Readiness (OSOR).

LIST OF ACRONYMS

ANSI	-	American National Standards Institute
CSAUP	-	Comprehensive Self Assessment and Upgrade Program
DSO	-	division safety officer
EHPD	-	Environmental & Health Protection Division
EMO	-	emergency preparedness officer
EPO	-	environmental protection officer
HCO	-	hazardous communications officer
HFIR	-	High Flux Isotope Reactor
HP	-	health physics
IEC	-	Issue Evaluation Committee
JCO	-	justify the continuing operation
MOU	-	memoranda of understanding
NCRP	-	National Council on Radiation Protection and Measurements
OOS	-	Office of Operational Safety
OSOR	-	Office of Safety and Operational Readiness
POC	-	performance objectives and criteria
QAS	-	quality assurance specialist
RCO	-	radiation control officer
R&D	-	research and development
RD&D	-	research, development, and demonstration
REDC	-	Radiological Engineering Development Center
ROC	-	Radioactive Operations Committee
RP	-	radiation protection
RWP	-	radiation work permits
RSO	-	radiation safety officer
TCO	-	training and certification officer
TSA	-	Technical Safety Appraisal

MEMBERSHIP OF ISSUES EVALUATION COMMITTEE

MEMBER*	ALTERNATE
J. R. Hightower,* Chairman Associate Director for Radiochemical Processing Programs	E. D. Collins, Head Process Development Section (PDS)
J. T. Bell,* Head Chemical Development Section (CDS)	D. J. Pruett, Manager, Radiochemistry and Isotopes Technology, CDS
T. K. Bayles,* CTD Quality Assurance Specialist	W. A. Brooke, QA Specialist, Radiochemical Engineering Development Center (REDC)
E. D. Collins,* Head Process Development Section (PDS)	L. J. King, Manager, REDC, PDS
C. E. Lamb,* CTD Safety/Radiation Control Officer	S. D. Clinton, Safety Officer, CDS
K. H. Lin,* Engineering Specialist, Engineering Coordination & Analysis Section (EC&A)	V. C. A. Vaughen, Office of Safety and Operational Readiness (OSOR)
B. D. Patton,* Head Isotopes Section (IS)	K. W. Haff, Manager, Radioisotope Processing, IS
L. M. Becker (recording secretary)	J. T. Shannon (recording secretary)

*Members vote; alternates vote in member's absence.

Comprehensive Self-Assessment and Upgrade Program Progress Report
for Period January 1 to June 30, 1989

K. H. Lin, P. Standifer, V. C. A. Vaughen

1. INTRODUCTION

The Chemical Technology Division performs its activities in five broad categories -- (1) basic experimental research and development (R&D), (2) applied experimental research, development, and demonstration (RD&D), (3) studies and analyses (non-experimental R&D), (4) isotope production (with R&D capabilities), and (5) non-technical support. The strength that Chem Tech has comes from its staff and their expertise. In many cases, the Chem Tech staff are the people who invented what is being done -- they are the experts by virtue of discovery and development or application of the discoveries of others. Some of the background and history of the Division is presented in Appendix A .

1.1 The Comprehensive Self-Assessment and Upgrade Program (CSAUP)

DOE has placed strong emphasis on a new way of doing business patterned on the lessons learned in the nuclear power industry after Three Mile Island. The new way relies on strict adherence to policies and procedures, greatly increased emphasis on training and documentation, and much more rigor and formality in operations. More visible oversight by upper management and auditability by DOE are also featured.

Although Chem Tech has functioned in a safe manner since its beginning, the policies and methods of the past are no longer appropriate. Therefore, in accordance with these directives, the Chemical Technology Division is improving its operational performance by making a transition to more formality in the observance of policies and procedures and the more deliberate consideration of the inter-relationships between organizations at ORNL. This transition to formality is timely because our staff and our facilities are changing with the passage of time. For example, some of the inventors and developers of the processes and facilities in use are now passing the torch to the next generation of Chem Tech staff. Our facilities have also served us well for many years, but

our newest facilities are now over 20 years old! All have increasing needs of refurbishment and repair and some of the older ones need to be replaced.

The Comprehensive Self-assessment and Upgrade Program (CSAUP) has been patterned on a similar activity performed at the High Flux Isotope Reactor. Using the Draft DOE Performance Objectives and Criteria (POC) for Technical Safety Appraisals (TSA) (May 1987) as a starting point, it was determined that 14 functional areas for evaluation listed in the report were suitable for Chem Tech use. Five additional functional areas were added for completeness since Chem Tech has a broader set of missions than a reactor facility.

The Performance Objectives and Criteria (POC) for each functional area in the above-mentioned DOE TSA document were modified to reflect the characteristics of the various Chem Tech operations. A policy statement was written to serve as an overall guide, and the Performance Objectives were written to give clear indication of the materials covered in each category. The new functional areas added by Chem Tech were derived in a similar fashion. For each objective, a set of criteria was derived to provide measures of how well the objectives were attained. Each POC was approved by an Issues Evaluation Committee composed of senior managers and representatives of safety and quality organizations in Chem Tech.

Following this approval process, an assessment was made, comparing Chem Tech's current practice with our objectives and policy statements. From this evaluation, a set of action items was identified to bring Chem Tech's practice into line with the focus on continuing improvement. Finally, the action items will be reviewed, approved, and prioritized by the same committee. A final round of approvals will be obtained on the division level prior to seeking funding and resources, scheduling, and performing the corrective actions.

This procedure, based on the lessons learned in the nuclear industry, will enhance Chem Tech's operational performance in some important ways, while maintaining the special factors that have allowed the Chem Tech staff to be creative and successful in their RD&D activities.

2. GENERAL SELF-ASSESSMENT PLAN

A schematic (depicted in Fig. 1) highlights key steps involved in a general plan (ORNL/CF-89/39) to carry out tasks required to accomplish the objectives mentioned above (Step B). The plan reflects our efforts to study and utilize applicable HFIR Lessons Learned (Step A) to implement the Chem Tech/CSAUP as illustrated in Fig. 1. Specific plans and detailed procedures for individual steps are detailed elsewhere in this report.

The initial step (Step C) in carrying out the CSAUP was to make use of expertise of non-Chem Tech staff including external as well as internal consultants to evaluate performance of Chem Tech radiochemical processing programs and to identify issues of concern based on all 14 functional areas prescribed in the DOE/TSA-POC. To this end, the Chem Tech management arranged a pre-TSA review team led by the ORNL Office of Operational Safety (OOS) to conduct an intensive evaluation during the period February 21 through March 3, 1989. Since then, the Chem Tech radiochemical processing facilities received visits from several external review/audit teams. They included (1) the ORNL Radioactive Operations Committee (ROC; 3/89); (2) ORNL Subcontractor team led by Auxier (4/17-21-89); (3) DOE/ORO TSA team chaired by Jelinek (2 times, week of 4/25/89, week of 5/8/89); and (4) a similar review chaired by Goldsmith (week of 6/12/89). All except Team No. 1 (ROC) have issued draft reports presenting findings (issues of concern) and recommendations. Further details on these activities are described in Section 5.

The findings from these review/audit activities have been taken up by the Issue Evaluation Committee (IEC) to study and evaluate issues of concern to determine whether the issues would lead to any safety compliance problems (Step D). The IEC consists of 8 Chem Tech members, an OOS representative (non-voting) and a recording secretary, chaired by Chem Tech Associate Director of Radiochemical Processing Programs. The basis for evaluation was the DOE/TSA-POC redefined in terms of the requirements for the Chem Tech-specific programs, which are significantly different from those for the reactor programs, and cover 19 functional areas including 14 functional areas prescribed in the original DOE/TSA-POC (described in Section 3).

ORNL DWG 89A-502

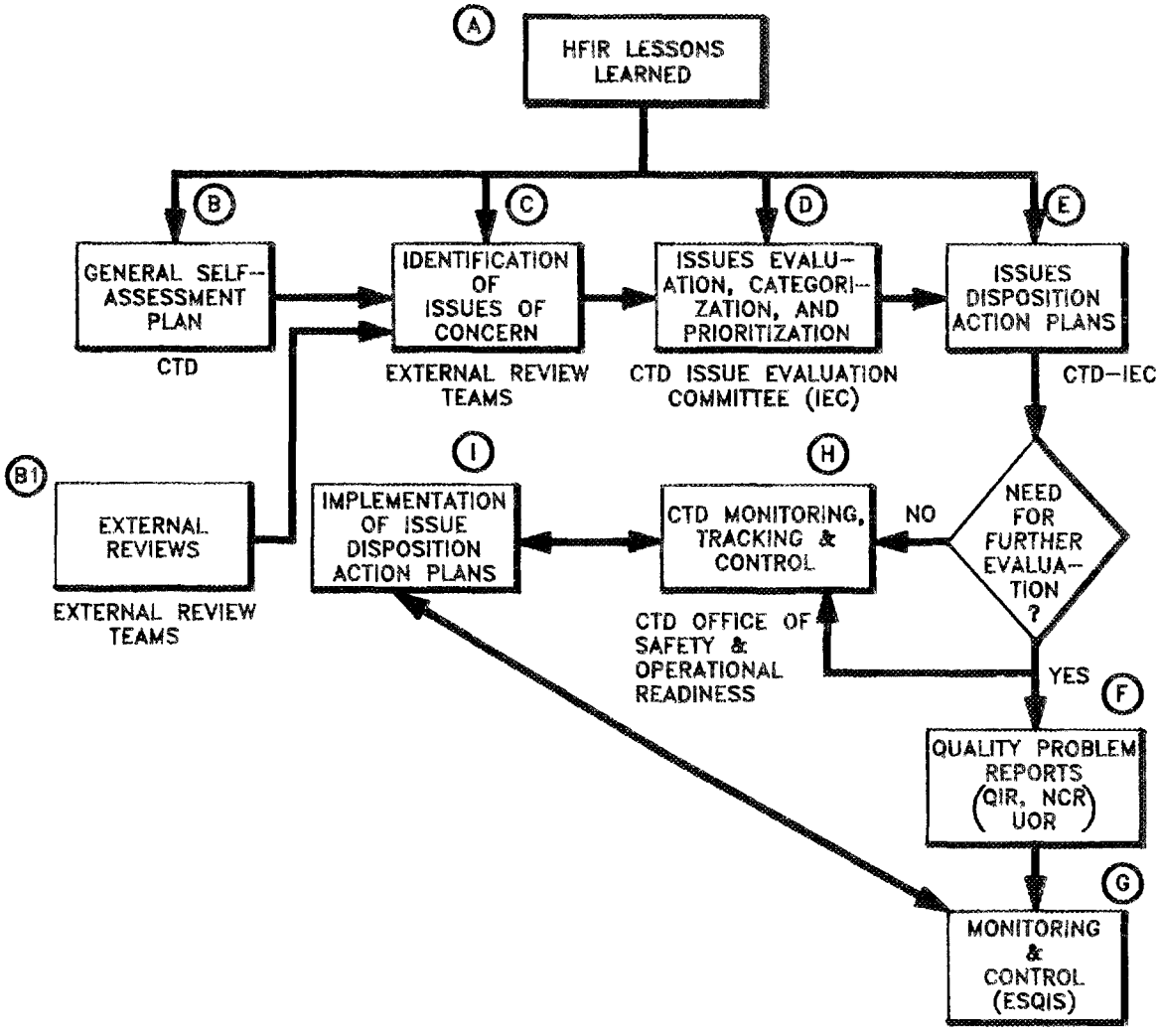

Fig. 1. Simplified Schematic of Self-Assessment Plan for TSA Readiness in CTD Radiochemical Processing Programs

Evaluation of the issues was followed by drafting of proposed actions in various functional areas to correct or improve any deficiencies that could impact on safety of operations. These actions were then categorized as to the risk (in terms of the consequence, severity and frequency of impact) involved should an issue or issues fail to be resolved or actions not be implemented. A risk categorization matrix was developed to facilitate determination of the risk severity in terms of the high, medium, or low risk category. Issues and/or actions in the high risk category should be assigned higher priorities for their resolution or implementation. Final prioritization of issues and actions, however, would have to consider not only the risks, but also availability of resources and urgency of the issues. This will be carried out when evaluation and categorization of issues/actions for the 19 functional areas are completed. As of the end of June 1989, the evaluation and categorization steps have been completed for Radiation Protection, Maintenance, Organization and Administration, and Quality Assurance. Sections 4, 5, and 6 present further details on Steps C and D in Fig. 1.

3. DOE/TSA PERFORMANCE OBJECTIVES AND CRITERIA ADAPTED FOR CHEM TECH

The basis for the self assessment by Chem Tech of its facilities and operations is the DOE Technical Safety Appraisal (TSA) performance objectives and criteria (POC). These POCs exist for 14 functional areas. (Table 1)

The Chemical Technology Division is one of several divisions in ORNL and many of the criteria called out in the TSA document are the responsibility of other divisions. Additionally, the radiochemical processing programs and the facilities of Chem Tech are unusual in many ways and some of the criteria originally developed for reactors are inappropriate for the Chem Tech operations. To create an appraisal document to be used for the ongoing and periodic assessment of Chem Tech, each DOE TSA criterion was examined for applicability and was (1) included as-is, (2) modified to be appropriate for Chem Tech or (3) was eliminated. The initial review and screening of the TSA criteria was performed by the Chem Tech manager assigned to each functional area, (with assistance provided by consultants from TENERA) and submitted to the Issue Evaluation Committee (IEC) for comment and approval. Where criteria were eliminated, the rationale for

Table 1. Safety-related functional areas specified in Chem Tech POC

Original Functional Areas and Order

1.	Organization and administration	(OA)
2.	Operations	(OP)
3.	Maintenance	(MA)
4.	Training and certification	(TC)
5.	Auxiliary systems	(AX)
6.	Emergency readiness	(ER)
7.	Technical support	(TS)
8.	Security/safety interface	(SS)
9.	Experimental activities (combined with operations for Chem Tech's POC)	(EA)
10.	Facility safety review	(FR)
11.	Nuclear criticality safety	(CS)
12.	Radiological protection	(RP)
13.	Personnel protection	(PP)
14.	Fire protection	(FP)

New Functional Areas

15.	Transportation and packaging	(TP)
16.	Configuration management	(CM)
17.	Quality assurance	(QA)
18.	Design adequacy	(DA)
19.	Control and use of radioactive and hazardous products	(CU)
20.	Environmental protection	(EP)

elimination was noted and included in the planning notes. As an example of the process, the screening and modification of POC for the functional area of Radiation Protection is documented in Appendix 2. The approved draft set of performance objectives and criteria for each area is being used for the self-evaluation described in the following section. A copy of this is available upon request.

There are some additional functional areas in the Chem Tech list not specifically covered by the DOE TSA criteria. These are QA, Design Adequacy, Configuration Management, Transportation and Packaging, Control of Hazardous Materials and Environment Protection. Chem Tech considers these additional areas to be important to any self-evaluation for assuring and improving safety of operations. Some of these additional POC were also implemented for the self-evaluation conducted by the Research Reactors Division for the High Flux Isotope Reactor (HFIR). Where criteria already existed, these were examined as was done for the DOE TSA criteria and adopted, modified for application to Chem Tech, or eliminated. Where no POC existed, performance objectives and criteria were created specifically for Chem Tech. In each case, the set of performance objectives and criteria established for each functional area was submitted to the IEC for approval.

The result of these screenings and reviews is a set of performance objectives and criteria in 19 functional areas that, together, form an appraisal document for the Chemical Technology Division.

4. CHEM TECH SELF-EVALUATION

The Performance Objectives and Criteria developed for the Chemical Technology Division were used as the basis for a self-assessment of all Chem Tech operations in the 19 functional areas. This assessment was conducted through individual planning sessions for each area and included Chem Tech representatives from Process Development, Isotopes, and Chemical Development Sections, and Chem Tech management as appropriate. In addition, representatives from other ORNL divisions were involved when it appeared that responsibilities for meeting the criteria were outside of Chem Tech. All actions were subjected to review and approval of the Issues Evaluation Committee before adoption.

The planning sessions were conducted to achieve the following:

- Assess the degree to which Chem Tech currently meets each of the criteria. Comments were documented for each of the criteria.

- Identify where Chem Tech is not meeting the criteria and hence, the performance objectives of each functional area.

- Identify the actions necessary to bring Chem Tech up to satisfactory performance relative to each of the criteria. In some cases, the actions include a short-term component (e.g., a quick "fix" or a compensatory action) and a long-term component. The short-term actions are described in Section 7.

- Determine the impact on safety (risk equals the product of consequences and frequency) of not meeting these criteria.

- Estimate the urgency of resolution.

- Prioritize the actions.

These latter three points are described in Section 6.

In addition to the planning sessions, individual interviews and follow-up discussions were held with key employees for verification of actual practice. Existing documentation such as policies, procedures, and records were reviewed for adequacy. In many of the functional areas, the responsibilities for performance to meet the criteria were shared with other ORNL divisions. In those cases where the specific responsibilities were not adequately documented between divisions, memoranda of understanding (MOU) were initiated. These MOU are considered to be an interim measure in assuring responsibility interfaces pending upgrade of position descriptions, procedures, etc.

The results of the planning sessions and interviews were compiled in individual reports. These may be obtained upon request. Additionally, the proposed actions to improve Chem Tech operational performance were identified for each finding. There were

approximately 170 separate actions identified for the 19 functional areas. These reports included a summary description of Chem Tech status for the functional area and described the findings against each of the performance objectives.

5. OTHER REVIEW/AUDIT ACTIVITIES:

Several other TSA-type reviews have been conducted recently. One of these, the Pre-TSA review was conducted specifically for the Chemical Technology Division by the Office of Operational Safety. In addition, a review was conducted by DOE ORO (referred to as the Jelinek review) on ORNL specifically in the area of radiation protection. This review included the operations and facilities of Chem Tech. Another review of ORNL facilities was conducted by IT Corporation as a mock TSA; and this addressed many of the 14 DOE TSA functional areas, covering Chem Tech facilities as well as ORNL at large. These reviews also resulted in a number of findings where deficiencies or concerns exist. The Pre-TSA review resulted in 68 recommendations; the mock-TSA resulted in approximately 110 findings or recommendations of which 44 were applicable to Chem Tech; and the Jelinek review resulted in 180 findings or recommendations of which 76 were applicable to Chem Tech.

There is considerable overlap among the Chem Tech self-assessment and the three other TSA-type reviews regarding findings and recommendations. The results of the four reviews were compared in order to identify the duplicative results and to generate a single list of actions which Chem Tech must implement or address. Of the 68 Pre-TSA recommendations, 37 were not duplicative to the self-assessment actions. Similarly, 27 of the 76 findings/recommendations from the Jelinek review and 12 of the 44 IT Corporation findings/recommendations were not duplicative to the self-assessment actions. In total, 242 independent actions have been identified (Table 2).

Appendix C provides a summary of the various findings by functional area and by review. Though the number of actions is somewhat large, there is a relatively small number of central issues or areas of improvement that encompass all of the specific actions. For example, it is recognized that, while Chem Tech work practices and operations have been conducted safely, there is a definite need to upgrade procedures and documentation to implement our continuous improvement programs. The effort to upgrade procedures and documentation, alone, will address more than 30 of the individual actions listed above.

Table 2. Summary of action items from TSA-type reviews that are applicable to CTD

	CTD CSAUP	Pre-TSA	Pre-TSA not covered in CSAUP	Jelinek/[a] Goldsmith	Auxier-Applicable to CTD	Auxier-[b] not covered in CSAUP	Total requiring CTD action[c]
Operations/exp.activities	16	12	8		10	1	25
Training	12	15	9		0	0	21
Organization/admin.	19	7	3		3	2	24
Quality assurance	4	0	0		0	0	4
Aux. systems	6	8	6		4	0	12
Rad protection	14	4	0	27	12	1	42
Maintenance	25	2	1		0	0	26
Emergency readiness	12	1	1		0	0	13
Configuration management	7	0	0		0	0	7
Technical support	13	13	6		0	0	19
Design adequacy	6	0	0		0	0	6
Env. protection	5	0	0		0	0	5
Personnel protection	5	3	3		12	6	14
Fire protection	4	3			1	0	4
Nuclear criticality	8				2	2	10
Transp. & packaging	5	0			0	0	5
Control of haz. prod.							
Facility dafety teview	5						5
Totals	166	68	37	27	44	12	242

(Compiled by Paul Standifer)

Notes:

[a] There were close to 180 findings/recommendations in the Jelinek report on ORNL. Seventy-six are considered applicable to CTD and of that number, all but 27 were duplicative to CSA recommended actions.

[b] Auxier's report was somewhat inconsistent in using findings and recommendations. There were approximately 110 findings or recommendations requiring action. Forty-four are considered applicable to CTD and of that number, all but 12 were duplicative to to CSA action.

[c] The totals appropriate to CTD for action:
- CTD CSAUP
- Pre-TSA that are not duplicative to CSAUP
- Jelinek/Goldsmith (those applicable to CTD) which are not duplicative to CSAUP.
- Auxier (those applicable to CTD) which are not duplicative to CSAUP.

Another area for improvement is that of radiation protection and specific findings and actions have been identified in this area. In addition to some near-term actions to correct deficiencies, the whole area of radiological protection work practices and procedures within Chem Tech (as well as throughout ORNL) is being systematically reviewed and a plan for improvement is being developed.

6. PRIORITIZATION OF ACTION PLANS

The number of proposed actions that Chem Tech will be carrying out as part of the improvement program is large and the resources within or at the disposal of Chem Tech are limited. Improvement actions must be prioritized in order to apply available resources in the most effective manner. To accomplish this prioritization, the Chem Tech Issue Evaluation Committee (IEC) has implemented an evaluation process that provides for systematic consideration of each 1action or issue. The IEC consists of the manager of the CTD Office of Safety and Operation Readiness, the CTD Associate Director of Radiochemical Processing Programs, the CTD Radiation Control Officer, the CTD Quality Assurance Manager and Section Heads.

For the evaluation process, this categorization is based upon the consideration of the risk posed by the failure to resolve an issue or action. The unique operations and facilities of Chem Tech were considered in order to identify the sources of risk. As used for this evaluation process, risk is expressed in terms of the frequency and severity of adverse impact associated with the failure to resolve an issue or action. The matrix shown in Table 3 lists the consequences which were considered by the IEC to be important to the evaluation of each issue and action.

The evaluation process has been implemented and is currently being used to address the proposed actions resulting from the CSAUP and other TSA-type reviews. All of the proposed actions represent areas of improvement, and these will be categorized according to their risk significance as shown in the matrix Table 3. For example, if failure to improve Chem Tech radiological protection work practices could result in a public loss-of-life accident with an estimated frequency of greater than once per hundred years, that improvement would be placed in the highest risk category. All high-risk areas of improvement are placed in the top priority bin for resolution. High-risk areas will be examined to identify short-term resolution strategies or compensatory actions that would

Figure 1. Risk Categorization Matrix

Consequence	Frequency A >1/year	B <1/year ≥10^{-2}/year	C <10^{-2}/year ≥10^{-4}/year	D <10^{-4}/year
Public Health and Safety				
1. Releases resulting in loss of life	H	H	H	H
2. Releases resulting in excessive exposure of population to either radioactive material or hazardous chemicals (>500 mrem/year)	H	H	M	L
3. Releases resulting in low-level exposure to either radioactive material or hazardous chemicals (>5 mrem/year, <500 mrem/year)	H	M	L	L
Personnel Health and Safety				
4. Incidents resulting in loss of life	H	H	H	H
5. Incidents resulting in significant personal injury or exposure (>5 rem/year) to either radioactive materials or hazardous chemicals	H	H	M	L
6. Incidents resulting in low-level exposure (>0.5 rem/year, <5 rem/year) to either radioactive material or hazardous chemicals	M	M	L	L
Regulatory Perception				
7.1 Violation of requirements imposed by federal statutes and by existing SARs and OSRs	H			
7.2 Apparent violation of requirements imposed in DOE orders or Energy Systems, ORNL, or CTD policies and procedures	M			
8. Deviation from good practice or recommended standard	M			
9. Incident draws concern regarding quality of CTD operation	M	L	L	L

*1 rem - 0.01 Sv.

significantly reduce the likelihood of incidents or would mitigate the consequence of incidents if they occur.

The medium-risk areas of improvement will be input into the planning process and risk reduction measures will be identified, planned, ranked, scheduled, and implemented. The low-risk areas of improvement will be documented; and if simple, low-cost risk reduction measures can be identified, they will be implemented on a schedule consistent with their priority and the availability of resources.

The final prioritization of categorized actions will be carried out when evaluation and categorization of actions for all 19 functional areas are completed and will be based, not only on the risks, but also on availability of resources and urgency of the actions or issues.

7. GENERAL ASSESSMENT OF TSA READINESS

During the past six months, Chem Tech has mobilized its resources to perform a comprehensive self-assessment of its administrative and functional policies and procedures relative to the new DOE policies and attitudes toward safety excellence. The Chem Tech management and staff decided that this long-range approach was the most effective way to position Chem Tech properly for the future, even though it might delay implementation of the needed changes. Efforts have been made to utilize HFIR-Lessons-Learned information and other relevant experience to the maximum extent in our TSA-related activities.

The four key elements in the HFIR-Lessons-Learned that are being emphasized by Chem Tech are:

1. Perform serious self-evaluation based on the DOE/TSA Performance Objectives and Criteria (POC).
2. Have independent reviews of Chem Tech operations.
3. Ensure that criteria exist for deciding when operations should be shut down or for justifying continued operation.
4. Have a process available for addressing problems as they arise and for tracking them.

Actions to address the first key element included preparation of the General Self-Assessment Plan for TSA Readiness (ORNL/CF-89/39). With respect to key element 2, Chem Tech has received several pre-TSA inspection/audits by teams outside Chem Tech. In addition the Chem Tech management intends to establish an independent advisory board outside the Oak Ridge facilities to review our operations. Actions addressing key elements 3 and 4 are currently under development.

To recapitulate, among our major accomplishments through June 1989 are:

1. Initiated a Comprehensive Self-Assessment and Upgrade Program (CSAUP) which redefined the DOE/TSA-POC in terms of the requirements of the Chem-Tech-specific programs and added 6 new Chem Tech POC.
2. Evaluated Chem Tech practice against the POC for all 19 areas and derived 166 action items.
3. Initiated risk categorization of these 166 action items (completed 4 of the 19 functional areas).
4. Established the Office of Safety and Operational Readiness (OSOR) within Chem Tech.
5. Review/audit activities by five teams:
   - Chem Tech Pre-TSA team led by the ORNL Office of Operational Safety (OOS)
   - ORNL Radioactive Operations Committee (continuing)
   - ORNL Subcontractor (IT team led by Auxier)
   - Mock TSA by DOE/ORO Audit for Radiological Protection (Jelinek/Goldsmith)
   - Spot checks and walk-throughs by DOE/HQ EH auditors (continuing)
6. Evaluated the issues of concern identified by the review/audit teams, and drafted plans to resolve or correct these specific findings.
7. Initiated a number of near-term actions (Table 4).
8. Initiated a seismic investigation of Bldg. 3517.

Table 4. Chem Tech short-term upgrades (in progress)

1. reviews of safety documentation;

2. updated most-critical operating procedures;

3. clean-out and decontamination of several hot cells in Bldgs. 3026D, 3028, 3029, 3517, and 3525;

4. upgrade metallurgical hot cells for Bldgs. 3025, 3026D, and 3525;

5. conduct Bldg. 3517 seismic event release study;

6. upgrade the filter plenum system for hot cell D in Bldg. 3047;

7. upgrade Bldgs. 3030 and 3031 containments:
   - cocooning completed,
   - airlocks designed,
   - ventilation modifications in planning;

8. relocation of Y-90 operations; and

9. performed a facility risk assessment (Table 5).

In conclusion, Chem Tech has been aggressively pursuing its CSAUP activities in the past six months. The elements of Chem Tech's Comprehensive Self-Assessment and Upgrade Program are presented in Table 6. Much of this work has been done using Division overhead funds, which has been a severe financial burden. In addition, many hours have been spent by the staff in addition to their normal duties (Table 7). These intense activities have generated some concerns about Chem Tech's future funding, staffing, and morale. Chem Tech is addressing the issues shown in Table 8.

Table 5. Status of facility risk evaluation (7/13/89)

Building	Evaluation status	Documentation status	Number of Findings Cat 2[a]	Cat 1[b]
3517	Complete	Draft complete	0	1
3525	Complete	Draft complete	1	2
7025	Complete	Draft complete	0	1
3038 E,M,NW,SW	Complete	Draft complete	1	0
3047	Complete	Draft complete	1	2
7920	Complete	Draft complete	0	0
7930	Complete	Draft complete	0	0
3029	Complete	Draft complete	0	1
3026 C,D	Complete	Draft complete	1	3
3028	Complete	Draft complete	0	0
3030	Complete	Draft complete	2	0
3031	Complete	Draft complete	0	0
3032	Complete	Draft complete	0	0
3033	Complete	Draft complete	0	2
3033A	Complete	Draft complete	2	0

[a]Cat 2, no significant risk but enhancements may exist.

[b]Cat 1, significant risk may exist - further investigation required.

Table 6. Elements of Chem Tech's Comprehensive Self-Assessment and Upgrade Program (CSAUP)

- Adjust management process and structure as needed to manage resolution of CSAUP issues
- Actively search for issues
- Plan and implement a long-term evolutionary change process
- Take action to resolve known key issues
- Seek and obtain adequate resources for CSAUP and related activities

Table 7. Chem Tech is investing substantial resources in CSAUP

Area	Estimated costs (10^3\$) Through April	May through Sept.
Division office[a] (Plans/policies/ coordination)	300	600
Radioisotope programs	700	800
Other Chem Tech programs	Small	TBD[b]

- Key managers in radioisotopes programs are expending as much as 50% of their time on CSAUP.

[a] Division office includes OSOR, TENERA, DSO/RCO, and QAS (all of which have had their time totally devoted to CSAUP)

[b] To be determined.

Table 8. Chem Tech concerns about the future

Staffing
Needs for new staff
Loss due to (early) retirement
Loss due to other causes (change in culture?)
Funding
Need supplemental operating funds
Need capital funds
Concerned about diversion of research funds
Morale (attitude)
Decreased effectiveness in RD&D
Decreased efficiency in RD&D
Changing satisfaction with work mix
Burnout of key staff

8. FUTURE DIRECTIONS

Chem Tech considers its CSAUP for the radiochemical processing part of Chem Tech an important component of the Division's activities in attaining its goals in safety excellence. The process will be broadened to cover all of the Division's activities and will evolve simultaneously into a *Continuing* Self-assessment and Upgrade Program (also designated CSAUP). In other words, a permanent process of change has been initiated through the activities of the past six months. In addition, the Chem Tech Office of Safety and Operational Readiness (OSOR) will obtain the staff needed to carry out its functions in the areas of safety, training, compliance, quality assurance, documentation, tracking, computerization of records, etc. (Table 9)

Table 9. Missions of the Chem Tech Office of Safety and Operations Readiness

1. Safety and Health (DSO/RCO)
2. Environment (EPO/HCO)
3. Training and Certification (TCO)
4. QA Interface (QAS)
5. Operational Readiness
6. Emergency Readiness and Crisis Management (EMO)
7. Commitment Tracking, Document Control, and Status Reporting

The critical action items that have been assigned to be completed in the near-term will be effected as rapidly as possible. These include the near-term activities which are needed to justify the continuing operation (JCO) of Chem Tech facilities.

The process of analyzing the 166 action items derived from the CSAUP and the 66 additional action items (Table 3), and assigning them to the categories in the risk (frequency and consequence) matrix will be completed. When the relative risk assessment is finished, the set of action items in each category in the risk matrix will be prioritized and given a unique sequence number for determining the relative order of importance. The final result will be the list of all action items in priority order. Starting with the 'bin' containing the action items having the highest risk category, proceeding through the moderate risk 'bin', then addressing the 'bin' containing the lowest risk items on an as-available basis, the remaining action items will be approved, planned, and scheduled -- that means a schedule will be developed that has a generic starting time, and the preliminary estimates for costs and other resources will be made.

This procedure will be used as each new review and audit generates unique findings and recommendations -- i.e., compare each new finding with the Chem Tech POC to assure that there will be no duplication of effort (and to benefit from on-going activities), determine what actions need to be taken, assess the risk and consequences, prioritize, plan, schedule, get approved, fund, implement, and close out.

Approval of each prioritized, scheduled, and costed action item will be obtained from the Chem Tech Management Review Committee. Funding will be obtained, or sought, so that a scheduled starting date leading to implementation of the plan and close-out of each action item may be set. As each definite starting date can be assigned, the action items will be woven into a "Living Schedule". The CSAUP process will continue by tracking and reporting on the progress of each action item. Status reports will be prepared on a monthly basis, so that management can oversee the process.

As the work on each action item is finished, a close-out process will assure that each action item has been completed properly. It will take many years and many millions of dollars to complete the action items now in the Chem Tech CSAUP process.

APPENDIXES

Appendix A

Background and Brief History of Chem Tech

The operational mode of the technical staff in Chem Tech is collegial in nature -- the staff consists of highly trained, highly intelligent, highly motivated individuals pursuing their own, their group's, the Division's, and their sponsor's interests. The Division expects different degrees of individual autonomy between the broad categories in general, and from the individual staff members, in particular.

- Those who pursue basic research function as individuals or in small groups. Their work packages are small, the ratio of sponsors (technical monitors of R&D) to researchers may exceed 1.0, the lifetime of many R&D projects is in the range of only one to two years. (Some projects continue for many years, of course.)

- Those who pursue applied research [Research, Development and Demonstration (RD&D) studies and assessments] function more as small groups, rather than as individuals, the ratio of sponsors to researchers may be less than 1.0, and the typical lifetime of the projects is in the range of 2 to 5 years.

- Those who pursue the larger scale RD&D and isotope production programs typically work in larger, multi-faceted groups, with primary responsibility for the safe operation of major facilities as well as programs. Their programs are often characterized by campaigns or runs to prepare materials and products. These programs typically are stable, lasting more than 5 years. (Of course, the mix of materials and products generated in any given year may change radically with time.)

The Roles of Research, Development and Demonstration (RD&D)

Chem Tech has long had an independent basic research program. While these basic experimental research programs have never accounted for more than a small fraction of the Division's funding or staffing, in pursuing its own research interests, this core program has been very influential in opening new fields for development and setting the tone for the quality of research and development in all Chem Tech RD&D endeavors.

Applied research, development, and demonstration (RD&D) is the historic back-bone of the Division. From the original missions to produce the first quantities of plutonium for the Manhattan Project and improve the recovery of uranium from ores, the missions grew to include (1) studies and demonstrations of all the steps in the nuclear fuel cycle (except for power production) for every conceivable kind of reactor, (2) the preparation of stable and radioisotopes for sale or for R&D, (3) R&D in many energy-related fields, and (4) studies and assessments of computer applications.

Isotope Production and Sales

Since 1947, DOE has provided isotopes and related services as part of its commitment to develop and encourage the peaceful uses of atomic energy. During this period, the overall field of isotopes-use has grown from the level of primarily investigational application to widespread direct applications in medicine and industry. It is DOE's policy to withdraw from provision of isotopes and services when reasonable commercial sources become available. As commercial uses for some isotopes have developed, the U.S. private sector has taken over their production. In addition, foreign, often government-related organizations have entered the market for some isotopes and have made a major impact on supplies and costs. Excluding enriched uranium, the total sales of isotopes (i.e., the isotopes themselves, compounds containing isotopes, and sources) in the free world is estimated at $\$500 \times 10^6$ per year. These sales support a multibillion-dollar economy in medical diagnosis and treatment, the radiation industry, and many other fields.

Of this large market, DOE's sales of isotopes total approximately $\$15 \times 10^6$ per year. Although DOE's total contribution to isotope supply is relatively small (on an economic basis), it does serve a critically important function by providing a large number of materials and services not otherwise available. This is especially significant in the research area where many of the approximately 300 isotopes offered by DOE are needed only in small quantities. Because of the small scale, the isotopes that are provided by DOE's Isotope Program, vital as they are, would not support a private business. Financing their production and sale has been an important DOE program, a program however, beset by a tangled nest of financing rules that do not cover all of the production costs -- for example, the costs of facility maintenance and upgrading (or new construction) are excluded from the prices charged for the materials.

Fuel Cycle Studies

Originally, the fuel cycle studies were large programs that included R&D studies to obtain data for the design and construction of demonstrations in hot cells, etc. Consequently, many desirable R&D projects were funded under the aegis of the large fuel cycle programs. Many basic research programs were funded separately under the DOE Basic Energy Sciences programs in a deliberate move to provide another dimension of understanding to the larger RD&D programs.

About 10 to 15 years ago, the large fuel cycle RD&D programs began to die out. This was due to several factors, among them a supposed "maturing" process leading to transfer of the technology to commercial interests, a dwindling supply of public monies for the nuclear areas, public disillusionment with a nuclear energy future, fewer new nuclear initiatives in general, and broadened missions for DOE (growth into conservation and alternate sources of energy, etc.) Not all of these reasons were independent, nor necessarily correct. For example, the oil crisis of 1973 lead to a broader mission for DOE and rapidly expanding programs on alternative energy studies at the expense of the established nuclear programs. It is now generally conceded that the nuclear power program that was transferred previously was not as "mature" as needed.

Changing Directions and Priorities

In association with existing DOE policies and the changes in national and governmental priorities, the missions of Chem Tech evolved towards a greater fraction of the Division's efforts going into studies and assessments, and a reduction of funding for the experimental R&D and the applied RD&D programs. (The applied RD&D programs, however, still account for the major blocks of funding within the division).

In addition, there was no funding for new construction, and the facilities built between the 1940s and the 1960s were kept in service. With the major organizational changes within ORNL in 1988, Chem Tech became responsible for a total of some 15 nonreactor nuclear facilities and dedicated laboratories within ORNL. Neither the basic research nor the applied research and development programs within Chem Tech included adequate funding to bring these facilities up to the new standards developed for commercial reactors. This

upgrading program is one of the top priority items on the Chem Tech agenda, to be done as rapidly as resources permit. Not all 15 facilities and dedicated laboratories need to be kept in service. Consolidation of some of these is in progress for the short term; new construction, perhaps in the vicinity of the Radiochemical Engineering Development Center (REDC) (Melton Valley), is considered to be a good long term goal.

How The Changes May Affect Chem Tech

The changes needed within Chem Tech are fundamentally a culture change.

- The culture change will affect all parts of Chem Tech, *but each to different degrees.*

  The effects of the cultural changes will be distributed among the parts of Chem Tech, for example, by having the activities grouped into graded risk categories, with the least risky endeavors being handled with a maximum degree of autonomy and collegiality, and the more stringent categories being handled, respectively, with more rigor and formality, somewhat analogous to our graded approach to QA.

  A major change, however, will be the future reliance on auditable procedures and more visible management oversight actions in all parts of Chem Tech's endeavors.

- The direction of the culture change is from the collegial, in general, to a more formally structured organization with duties and responsibilities clearly specified and understood and with a greater reliance on policies and procedures.

- The direction of the culture change is from the autonomous stature of the individual researcher or technical manager to the rule by policies and procedures (albeit written by these same people) and the auditing of performance by outside regulators.

- The direction of the culture change is from Chem Tech being merely a supplicant to DOE for funding -- to Chem Tech (and DOE) recognizing that adequate funding to provide staffing and resources to perform the jobs safely, maintain the facilities, and assure quality are integral (and primary) parts of RD&D. This direction of change implies that DOE will match the pace of its demands for change (at the risk of facility shutdown) with adequate and timely funding for the projects.

  The changes we foresee are too big to be paid out of our normal RD&D funds. We dare not fail to be competitive with other National Laboratories in our RD&D costs if we wish to survive.

- The Technical Safety Appraisal (TSA) process is important, but it provides only one measure of the changes that Chem Tech will need to make. We are in the process of re-working our basic operating philosophy as we perform our CSAUP.

During all of this change in culture and emphasis on policies, procedures, and training, it is important to retain the creativity and esprit de corps of the staff in pursuing the Chem Tech missions.

Appendix B

Performance Objectives and Criteria

for

RADIATION PROTECTION

in the

Chemical Technology Division

April 28, 1989

S. D. Clinton
C. E. Lamb
V. C. A. Vaughen

Radiation Protection Policy in the Chemical Technology Division

The Chem Tech Division will operate its R&D projects, its supporting activities, and its buildings and facilities in a manner that meets or exceeds the requirements of the regulations and policies for radiation protection and which actively promote the ALARA principle of radiation protection of our personnel, our facilities, the public, and the environment.[a]

---

[a] The following Performance Objectives and Criteria (POCs) have been derived from the DOE/TSA listing of POCs. A concordance relating the DOE/TSA list, one for one with the Chem Tech version, follows. The POCs 5 through 13 will be provided by radiation protection services personnel in the Environmental and Health Protection Division.

Index to Appendix B

Page

Radiation Protection Concordance 34

RP.1 Organization and Administration 34

RP.2 Internal Audits and Investigations 34

RP.3 Radiological Protection Procedures and Posting 35

RP.4 External Radiation Exposure Control Program 36

RP.5
RP.6
RP.7
RP.8
RP.9
RP.10
RP.11
RP.12
RP.13

To be Covered by MOU

RADIATION PROTECTION CONCORDANCE

S. D. Clinton
April 25, 1989

RP. 1

Original	Final
1	1
5	2
6,8,11	3
2	4
3,12,13,14,15 Plus RP. 2 #15 and RP. 3 #15	5
4,7	6
5	7

RP. 2

1,2,3,4 Plus RP. 1 #9	1
5 Plus RP. 1 #10	2
6	3

Accidents/etc.

Original	Final
7	1
16	2
8,13,14	3
9,10,11	4
12	5

RP. 3

1	1
2	2
3	3
4	4
5	5
6,7,8	6

Posting

9	1
10	2
11	3
12	4
13	5
14	6
16	7
17	8

Source

18	1
19	2
21	3

Devices

Original	Final
24,25	1
27,29,30,31,32	2
28	3
33	4

RP. 4

1,2,5,6	1
3	2
4	3

RP.1 Organization and Administration

Performance Objective

The Chemical Technology Division (Chem Tech) organization and administration ensures effective implementation and control of radiological protection activities within its facilities.

Criteria

1. Organizational responsibilities for radiological protection are clearly defined.

2. Personnel clearly understand their authority, responsibilities, and accountabilities.

3. Radiological protection requirements are implemented by management in accordance with approved, up to date policies and procedures.

4. Adequate staffing and resources are provided for assigned tasks.

5. Management has a proactive program for attaining ALARA goals in radiation protection by training, by promoting safe work practices, by reviewing and analyzing radiation exposures, by correcting deficiencies, by actively encouraging staff participation in attaining ALARA goals, and by actively working to reduce the opportunities for the release of radioactive materials to the environment.

6. There is a clear understanding of the duties and responsibilities of radiation protection support personnel provided by the Environmental and Health Protection Division to work in Chem Tech buildings or facilities.

7. There is a clear understanding of the duties and responsibilities of Chem Tech personnel and non-Chem Tech personnel for the radiation protection of non-Chem Tech personnel assigned to, or working in Chem Tech buildings or facilities.

RP.2 Internal Audits and Investigations

Performance Objective

The effectiveness of the Chem Tech radiation protection program is measured by periodic internal audits, and any accidents, incidents, unusual occurrences or failures to measure up to the performance objectives or criteria are investigated, documented, and analyzed and, where indicated, corrective actions will be taken to prevent repetitions.

Criteria

Internal Audits for Routine Operations

1. Radiation Protection program elements are audited internally at specified intervals (not to exceed three years) by qualified personnel not directly connected with the operations under review, to determine the effectiveness of the program, to detect problems, and provide corrective actions.

2. The audits are documented and circulated to inform and raise the awareness of the division staff to the issues of radiation protection within Chem Tech.

3. Chem Tech management is aware of the findings and recommendations from the internal audits and ensures appropriate follow-up action.

Accidents/Incidents/Unusual Occurrences

1. The actions required to identify, evaluate, report, document, and follow-up any indicated corrective actions for each event in these categories are clearly described.

2. The investigation and reporting of accidents and unusual occurrences are governed by procedures and policies.

3. The events are categorized by type of event, frequency, causes, and trends for planning and implementing corrective actions, where indicated.

4. Chem Tech management actively oversees the post-event activities and corrective actions.

5. Chem Tech management stops work, if necessary, to ensure that any corrective action is taken to preclude repetition or broadening of the accident.

RP.3 RADIOLOGICAL PROTECTION PROCEDURES AND POSTING

Performance Objective

Procedures for the control and use of radioactive materials and radiation generating devices provide for safe operations and clearly identify areas of potential hazard.

Criteria

1. Chem Tech policies for radiation protection are traceable to DOE orders (i.e., from DOE Orders to Martin Marietta Energy Systems (MMES) Policies and Procedures to ORNL Standard Practice Procedures to Chem Tech policies and procedures.)

2. MMES has a written policy on radiation protection, including ALARA.

3. Radiation protection standards, procedures, and controls have recognizable or formal technical bases for limits, methods, and personnel protection standards. They include sound radiological requirements such as those recommended in American National Standards Institute (ANSI) and national Council on Radiation Protection and Measurements (NCRP) documents.

4. Work in radiation areas is performed using approved operating procedures. Radiation Work Permits (RWP) are used as specified in the Health Physics (HP) Manual for ORNL. The supervisor may require an RWP as his option.

5. The radiation protection procedures are adequately documented, reviewed, and up-to-date.

6. Important safety documentation (such as, Problem Safety Summaries, Safety Analysis Reports, Operating Safety Requirements, and Safety Analyses) have a documented approval chain, are scheduled for review and/or revision at specified intervals, and are maintained at the site and in a centralized, historical file. There is a

tracking and inventory system to assure that the review/revisions are performed on time, and that the records are retained as specified by procedures.

Posting

Posting in Chem Tech facilities is the responsibility of Chem Tech staff, and should be addressed by them in consultation with EHPD staff.

1. The technical criteria, and dose rate and/or levels, for defining radiation, high radiation, very high radiation, contamination, and airborne radioactivity areas are established, documented, and consistently applied.

2. Radiation levels are established and documented for when areas are to be barricaded, and marked to prevent inadvertent entry, and when areas are to be physically locked, to preclude unauthorized entries.

3. Current radiation work permits (radiation zone entry permits) or posted regulations meeting the requirements of the facility, are posted at entrances to work areas as required. They reflect actual working conditions. Out-of-date work permits are removed in a timely manner.

4. Results of radiation surveys of radiation areas are posted at the entrance (E&HP Division).

5. Airborne activity areas are posted to alert personnel to possible respiratory protection requirements.

6. DOE required forms are posted in all facilities.

7. Areas where radioactive materials are handled or stored are clearly and accurately posted.

8. Entrance to areas where radioactive materials are used or stored is restricted based upon established criteria.

8. Entrance to areas where radioactive materials are used or stored is restricted based upon established criteria.

Source Control

1. Inventories of stored radioactive materials specify locations, quantities, and characteristics, and are current and periodically audited.

2. Procedures are in place to adequately control, label, handle, ship, and receive source material. They do address ALARA principles.

3. Containers used for storage provide at least one barrier of containment.

Radiation Generating Devices

1. The radiation field around radiation generating devices and radioactive material has been characterized -- appropriate procedures and warning signs are utilized.

2. Fail-safe interlocks, barriers, shielding, visible warning lights, and area radiation monitors are required to ensure the safety of operators and other personnel.

3. Set-points to activate interlocks and alarms (visible and audible) are documented and tested.

4. Inspections of machines are performed periodically and documented.

RP.4 EXTERNAL RADIATION EXPOSURE CONTROL PROGRAM

Performance Objective

External radiation exposure controls should minimize personnel radiation exposure.

Criteria

1. Effective exposure control methods are used in accordance with ALARA principles.

2. The radiation exposure reduction program includes work planning and scheduling when significant personnel exposure is expected.

3. Specific job-related exposure reduction efforts (i.e., temporary or permanent shielding, special tools, decontamination, personnel briefings, and training) are incorporated into work procedures where appropriate.

RADIATION PROTECTION

TENERA Facilitator: Paul Standifer

Chem Tech Functional Manager: Vic Vaughen

Chem Tech Personnel Contacted: Vic Vaughen, Les King, Cal Lamb, Joe Devore

The radiation protection function within Chem Tech has been performed as a collateral duty by the Chem Tech RCO, supported by certain responsibilities and actions of Chem Tech line managers. The Division Radiation Control Officer has discharged the duties of the office in an exemplary fashion while also serving as the Division Safety Officer, the Division Environmental Protection Officer, and the Division AA Representative. The duties of the DSO/RCO will require more attention in the future and may preclude serving in other capacities as well. Formalization of documentation within Chem Tech has been started but is incomplete. Responsibilities, authorities and accountabilities need to be fully documented and comprehensive Chem Tech procedures for implementing radiation protection (RP) activities need to be developed. Staffing is sufficient to carry out the tasks necessary for safe operations but is not sufficient to accomplish the radiation protection tasks as set forth in the vision statement. For these reasons, several improvements must be made in the short term to enhance safety documentation, principally through the development and formalization of structures, procedures, and instructions. A necessary prerequisite to formalizing the documentation is to clearly establish responsibilities, both within Chem Tech and between Chem Tech and the E&HP division. The latter of these will be documented via a MOU which is in preparation by personnel in both divisions. The remaining deficiencies regarding ALARA, program auditing, posting, and policy/procedure refinement can be addressed in the longer term as described below.

RESULTS OF THE PLANNING PROCESS

Performance Objective 1:

Chem Tech organization and administration ensures effective implementation and control of radiological protection activities within its facilities.

1. The organizational responsibilities, authorities, and accountabilities for radiation protection activities in Chem Tech are described in numerous documents but need to be evaluated for completeness and consistency and consolidated into a usable format specifically addressing the radiation protection function.

   Approved Action(s):
   • Continue the current efforts to generate both an organizational chart identifying the unit relationships and a MOU with the EHP Division to document the responsibilities and interfaces.

   Risk Priority Categories from Table 3 - Section 6
   5B, 6A, 8A, 9A

2. Individual responsibilities for radiation protection within Chem Tech are described for the most part, but these descriptions are spread among numerous documents such as the Chem Tech Safety Manual, EHP manuals, etc.

   Approved Action(s):
   • Review responsibilities that are to be assumed by Chem Tech in concert with the finalization of the MOU with EHP. Assign responsibilities to the Chem Tech RCO and other managers as appropriate and document consistently.

   Risk Priority Categories from Table 3 - Section 6
   6A, 8A, 9A

3. There is a need for additional Chem Tech approved policies and procedures in place for implementing radiation practices and requirements. The practices now in use need to be formalized and documented.

Approved Action(s):

• Conduct a review of each Chem Tech facility using EHP and Chem Tech personnel to determine if rad protection practices and procedures/documentation are adequate. Where these are not adequate, generate instructions for personnel and management as an interim measure pending the development of division procedures. Conduct appropriate training with the instructions.

Risk Priority Categories from Table 3 - Section 6
5B, 6A, 7A, 8A, 9A

• Produce specific procedures and documentation to implement rad protection practices within Chem Tech.

Risk Priority Categories from Table 3 - Section 6
6B, 9A

4. Sufficient staffing and resources are available for performing duties related to maintaining safe operations but are not sufficient to carry out all the activities to achieve the vision of Chem Tech for radiation protection activities. Some areas of the division may have sufficient support by HP but the division as a whole is not adequately covered to accomplish all RP tasks. Some areas of Chem Tech have sufficient rad protection activities in place but buildings occasionally encounter delays in coverage by HP for routine operations. It should be stressed that when HP resources or other RP support is not available, operations are delayed rather than carried out unsafely.

Approved Action(s):

• Review the responsibilities for radiation protection activities that Chem Tech assumes in the MOU development. Determine whether a full-time Chem Tech RCO is needed to adequately perform the tasks. Determine other resources

needed both within and outside of Chem Tech. Act to correct any deficiencies as rapidly as feasible.

Risk Priority Categories from Table 3 - Section 6
6A, 8A, 9A

5. The ALARA program is documented via the EHP procedures but is not implemented sufficiently at the division level. Not all supervisors and personnel are sufficiently aware of the objectives of ALARA. Lack of awareness must be addressed in the near future.

Approved Action(s):
• Conduct retraining for all managers and supervisors in the objectives and principles of ALARA.

Risk Priority Categories from Table 3 - Section 6
6A, 7A

• Conduct training for all personnel in generic ALARA principles, useful for reducing exposures to hazardous chemicals as well as radioactive materials.

Risk Priority Categories from Table 3 - Section 6
6A, 9A, 8A
• Analyze each area of Chem Tech and develop ALARA implementation modules for radiation protection for each Chem Tech facility. Develop Chem Tech documentation for specific application of ALARA principles in Chem Tech facilities.

Risk Priority Categories from Table 3 - Section 6
6B, 8A

Performance Objective 2:

The effectiveness of the Chem Tech radiation protection program is measured by periodic internal audits. Any accidents, incidents, unusual occurrences or failures to

measure up to the performance objectives or criteria are investigated, documented, and analyzed and, where indicated, corrective actions are taken to prevent repetitions.

6. Radiation protection program elements are not audited internally to detect incipient problems. This is due to the inadequate resources assigned and the lack of procedures at the division level. External reviews are conducted by the Radioactive Operations Committee (ROC) and by EHP to detect important discrepancies and this is considered adequate for safety in the near term. However, development of a documented audit process at the division level is necessary.

Approved Action(s):

• Develop a procedure for the implementation of RP audits at the Chem Tech Division level. Incorporate adequate documentation and distribution requirements, and management review of audit findings and follow-up actions.

Risk Priority Categories from Table 3 - Section 6

6B, 8A, 9A

Performance Objective 3:

Procedures for the control and use of radioactive materials and radiation generating devices provide for safe operations and clearly identify areas of potential hazard.

7. Not all policies and procedures used by Chem Tech for RP activities are traceable to DOE orders and some are out of date.

Approved Action(s):

• Review Standard Practices and Procedures that Chem Tech must utilize in radiation protection activities for consistency to current DOE orders. Notify ORNL management for update of necessary procedures.

Risk Priority Categories from Table 3 - Section 6

8A, 9A

8. Posting and monitoring is deficient for areas defined as having airborne activity in Chem Tech. Identification of airborne radionuclides takes several days because of unavailability of sample analysis equipment.

Approved Action(s):

• Review requirements for posting of airborne activity areas and implement via assignment to personnel and development of procedures.

Risk Priority Categories from Table 3 - Section 6

6B, 8A, 9A

• Assess availability of sample analysis equipment and need for speedy airborne sample results. Take steps to improve.

Risk Priority Categories from Table 3 - Section 6

8A, 9A

9. Restricted access is not accomplished for all cases. Marking of areas with "Authorized Personnel Only" is done but use of card readers is not available and locked doors or fenced areas are not in place at all appropriate locations.

Approved Action(s):

• Review requirements and identify all areas requiring restricted access. Recommend degree of restriction needed at each designated area. Implement access restrictions recommendations.

Risk Priority Categories from Table 3 - Section 6

6A, 8A, 9A

10. Inventories of stored radioactive materials (i.e., materials not in process) are maintained in most cases but there is no consistent documented process for generation, maintenance and auditing for these inventories. Control, labeling, handling and shipping of radioactive materials are not adequately covered by procedures.

Approved Action(s):

• Review facility needs for radioactive material control and inventory maintenance. Develop procedures appropriate to cover these activities in each Chem Tech facility.

Risk Priority Categories from Table 3 - Section 6

6A, 8A

APPENDIX C

Reconciliation of Actions/Findings from TSA-Type Reviews
Chemical Technology Division

Legend:

CSA - CTD Comprehensive Safety Assessment Upgrade Program (Self Appraisal)
PRE - OOS Pre TSA Audit of CTD - February 1989
BGR - Bassett/Goldsmith Report of Rad. Protection (ORNL)
ITA - IT Corporation/Auxier Mock TSA of ORNL

CSAUP RECOMMENDATIONS		REVIEW RECOMMENDATIONS FROM OTHER REVIEWS WHICH ARE DUPLICATIVE TO CSA
CSA-OA-	1.1	BGR-3.1.3.2
	2.1	
	3.1	
	4.1	PRE-TC-6.2, PRE-TC-6.3
	5.1	
	6.1	
	7.1	
	8.1	PRE-OA-1-2
	8.2	
	10.1	
	12.1	
	13.1	
	14.1	PRE-EA-1-1
	15.1	
	17.1	
	18.1	
	19.1	
	20.1	
	21.1	
CSA-OP-	1.1	ADDRESSED BY CSA-MA 1.1 and CSA-MA 3.1
	2.1	BGR-3.3.4.2.2
	3.1	ITA-OP-7.9.1
	4.1	ITA-OP-1.14.1
	5.1	PRE-OP-2-2
	6.1	
	7.1	PRE-TS-3-3, ITA-OP 1.11.1, ITA-OP-1.6.1, ITA-OP-2.3.1, BGR-3.3.2.1.5, ITA-OP-1.11.1, ITA-OP-2.3.1, ITA-EA-1.2.
	8.1	
	9.1	
	10.1	
	11.1	
	12.1	
	13.1	
	14.1	ITA-OP-3.8.1
	15.1	BGR 3.3.8.1.1
	16.1	ADDRESSED BY CSA-MA-1.1 AND CSA-MA-3.1

CSAUP RECOMMENDATIONS (continued)	REVIEW RECOMMENDATIONS FROM OTHER REVIEWS WHICH ARE DUPLICATIVE TO CSA (continued)
CSA-MA- 1.1	PRE-MA-1-1, PRE-TS-2-2, CSA-OP-16.1 PRE-TS-4-1, PRE-OP-1-1
1.2	BGR-3.3.4.2.5
1.3	
1.4	
2.1	
2.2	
3.1	PRE-OP-1-1, PRE-TS-4-2, BGR-3.1.7.2
4.1	
5.1	BGR-3.1.8.1
7.1	ITA-OP-1.6.1
7.2	
7.3	BGR-3.3.7.1.3, BGR-3.3.7.1.4
9.3	
10.3	
12.3	
13.3	
15.1	
15.2	
15.3	
15.4	
16.1	PRE-AX-2-4
17.1	
18.1	
19.1	
23.1	

CSAUP RECOMMENDATIONS (continued)		REVIEW RECOMMENDATIONS FROM OTHER REVIEWS WHICH ARE DUPLICATIVE TO CSA (continued)
CSA-TC-	1.1	
	2.1	
	3.1	BGR-3.2.5.2.1
	4.1	PRE-TC-6-2, PRE-TC-10-1, BGR-3.3.5.1.12
	5.1	BGR-3.2.5.2.1, ITA-PP-7.1.8.1.
	6.1	
	7.1	
	8.1	
	9.1	
	10.1	
	11.1	PRE-TC-4-1, PRE-TC-6-1
	12.1	
CSA-AX-	1.1	ITA-AX-1.10.1, ITA-AX-2.3.1
	2.1	PRE-AX-1-1, ITA-2.1.1
	3.1	
	4.1	ITA-AX-4.12.1
	5.1	BGR-3.3.2.1.2
CSA-ER-	1.1	
	2.1	
	3.1	
	4.1	ITA-ER-2.2.1, ITA-ER-2.2.2
	5.1	BGR-3.3.2.1.3
	6.1	
	7.1	BGR-3.3.4.2.4
	8.1	
	9.1	
	10.1	
	11.1	
	12.1	
	13.1	
CSA-TS-	1.1	PRE-TS-1-1
	2.1	
	3.1	
	4.1	PRE-TS-2-1
	5.1	
	6.1	
	9.1	
	10.1	
	11.1	
	12.1	

CSAUP RECOMMENDATIONS (continued)		REVIEW RECOMMENDATIONS FROM OTHER REVIEWS WHICH ARE DUPLICATIVE TO CSA (continued)
CSA-FR-	1.1	
	2.1	
	3.1	
	4.1	
	5.1	ITA-RP-3.1.1
	6.1	ITA-RP-4.5.1
CSA-CS-	1.1	
	2.1	
	3.1	
	4.1	
	5.1	
	6.1	
	7.1	
	8.1	
CSA-RP-	1.1	PRE-RP-2-1
	2.1	ITA-RP-1.14.1, ITA-RP-1.5.1
	3.1	PRE-RP-1-1, BGR-3.1.5.2, BGR-3.2.5.1.1, BGR-3.3.4.2-27-30, BGR-3.3.5.1.8, BGR-3.3.5.1.10, BGR-3.3.5.1.12, BGR-4.3.1.1, BGR-4.3.1.2, ITA-RP-1.5.2
	3.2	
	4.1	PRE-RP-2-2
	5.1	BGR-3.1.6.1, BGR-3.2.1.2.1
	5.2	BGR-3.3.3.1.3
	5.3	PRE-RP-3-1, BGR-3.3.7.1.14, BGR-3.1.6.1, BGR-3.2.3.1.1, BGR-3.2.3.1.2, BGR-3.2.3.1.3, BGR-3.2.3.4.1, BGR-3.3.3.1.1, ITA-RP-4.4.1
	6.1	
	7.1	
	8.1	ITA-RP-3.5.1.1, ITA-RP-3.12.1
	8.2	BGR-4.2.2.1, BGR-3.2.1.13.2, ITA-RP-6.2.1, BGR-3.2.4.1.6
	9.1	BGR-3.3.4.2.2, BGR-3.3.4.2.6, IA-RP-3.17.1
	10.1	BGR-3.3.4.2.20, BGR-3.3.4.2.26, BGR-3.3.4.2.32
CSA-PP-	1.1	
	2.1	ITA-OP-7.9.1, BGR-3.3.8.1.1-4
	3.1	ITA-PP-3.3.1, ITA-PP-3.3.2
	4.1	ITA-PP-4.1.2, ITA-PP-7.13.1
	4.2	ITA-RP-3.18.1

CSAUP RECOMMENDATIONS (continued)		REVIEW RECOMMENDATIONS FROM OTHER REVIEWS WHICH ARE DUPLICATIVE TO CSA (continued)
CSA-FP-	1.1	PRE-FP-1-1, PRE-FP-2-1
	2.1	PRE-FP-3-1, ITA-FP-4.1.2
	3.1	
	4.1	
CSA-CM-	1.1	ITA-OP-2.5.1
	2.1	
	3.1	
	4.1	
	5.1	
	6.1	
	7.1	
CSA-DA-	1.1	BGR-3.3.4.2.14
	2.1	
	3.1	
	4.1	BGR-3.3.6.1.1, ITA-EA-2.2.1, ITA-EA-2.2.2, ITA-PP-1.3.2
	5.1	
CSA-EP-	1.1	
	2.1	
	3.1	
	5.1	
CSA-TP-	1.1	
	2.1	
	3.1	
	5.1	
	6.1	
	7.1	
CSA-QA-	1.1	PRE-OA-2-2, PRE-OA-2-3, ITA-QA-1.14.1
	2.1	
	3.1	PRE-OA-2-1, ITA-OA-1.7.1
	4.1	

ITEMS FROM OTHER REVIEWS WHICH ARE NOT DUPLICATIVE TO CSA

PRE- OA-1-1
OA-1-3 (Action already complete)
OA-1-4
OP-1-2
OP-2-1
OP-2-3
OP-2-4
ER-1-1
MA-2-1
TC-1-2
TC-2-1
TC-3-1
TC-3-2
TC-5-1
TC-5-2
TC-7-1
TC-8-1
TC-9-1
AX-1-2
AX-2-1
AX-2-2
AX-2-3
AX-2-5
AX-3-1
TS-1-2
TS-1-3
TS-2-3
TS-3-1
TS-3-2
TS-3-4
EA-2-1
EA-2-2
EA-3-3
EA-1-1
PP-1-1
PP-1-2
PP-2-1
ITA-OA-6.4.1
ITA-OA-6.4.2
ITA-OP-1.9.1
ITA-CS-1.0.1
ITA-CS-1.0.2
ITA-RP-5.14.1
ITA-PP-1.3.1
ITA-PP-2.6.1
ITA-PP-2.6.2
ITA-PP-7.1.1
ITA-PP-7.1.2
ITA-PP-7.2.1

ITEMS FROM OTHER REVIEWS WHICH ARE NOT DUPLICATIVE TO CSA
(continued)

BGR- 3.1.4.6
3.1.4.8

3.2.1.1.1
3.2.4.1.3
3.2.4.1.4
3.3.3.1.2
3.3.3.1.5
3.3.4.1
3.3.4.2.1
3.3.4.2.9-12
3.3.4.2.15-18
3.3.4.2.20-23
3.3.4.2.33
3.3.5.1.4
3.3.5.1.5
3.3.5.1.6
3.3.7.1.6

Internal Distribution

1. H. L. Adair
2. T. K. Bayles
3. L. M. Becker
4. J. M. Begovich
5. J. T. Bell
6. W. A. Brooke
7. C. H. Brown
8. S. D. Clinton
9. E. D. Collins
10. A. G. Croff
11. T. V. Dinsmore
12. R. K. Genung
13. J. A. Hedges
14. J. R. Hightower
15. L. J. King
16. E. K. Johnson
17. R. L. Jolley
18. C. E. Lamb
19-23. K. H. Lin
24. M. E. Mitchell
25. O. B. Morgan
26. F. R. Mynatt
27. B. D. Patton
28. H. B. Piper
29. T. B. Powell
30. D. J. Pruett
31. T. H. Row
32. F. M. Scheitlin
33. C. D. Scott
34. M. G. Stewart
35-39. P. W. Standifer
40. V. C. A. Vaughen
41. R. M. Wham
42. P. J. Wood
43. A. L. Wright
44. A. Zucker
45. Central Research Library
46. Y-12 Technical Library, Document Reference Section
47. Laboratory Records
48. Laboratory Records, RC
49. ORNL Patent Section

External Distribution

50. Office of Assistant Manager for Energy Research and Development, DOE-ORO, Oak Ridge, TN 37831

51-60. Office of Scientific and Technical Information, P.O. Box 62, Oak Ridge, TN 37831

61. D. R. Brown, Energy Research and Development, DOE-ORO, P.O. Box 2001, Oak Ridge, TN 37831

62. C. W. Burger, Department of Energy, Oak Ridge Operations, MS-8610, Oak Ridge, TN 37831