ORNL/M-1015

# MODELING OF TIME-DEPENDENT EMERGENCE OF CORE DEBRIS FROM A BOILING WATER REACTOR VESSEL UNDER SEVERE ACCIDENT CONDITIONS*

L. J. Ott
S. A. Hodge

Boiling Water Reactor Severe Accident
Technology (BWRSAT) Program

Oak Ridge National Laboratory
Oak Ridge, Tennessee 37831

April 22, 1988

*Research sponsored by the Office of Nuclear Regulatory Research, U.S. Nuclear Regulatory Commission under Interagency Agreement DOE 0551-0551-A1 with the U.S. Department of Energy under Contract DE-AC05-84OR21400 with the Martin Marietta Energy Systems, Inc.

# MODELING OF TIME-DEPENDENT EMERGENCE OF CORE DEBRIS FROM A BOILING WATER REACTOR VESSEL UNDER SEVERE ACCIDENT CONDITIONS

L. J. Ott S. A. Hodge

Boiling Water Reactor Severe Accident Technology (BWRSAT) Program

Oak Ridge National Laboratory
Oak Ridge, Tennessee 37831

## I. Introduction

Boiling Water Reactors (BWRs) and their primary containments have unique features for which special models must be provided if best-estimate severe accident calculations are to be performed. The Boiling Water Reactor Severe Accident Technology (BWRSAT) Program at Oak Ridge National Laboratory (ORNL) has developed and incorporated into its Boiling Water Reactor Severe Accident Response (BWRSAR) code several advanced response models for application to BWR severe accident analyses. Major features of these advanced in-vessel models include representation of (1) heat transfer to all in-core structures including channel boxes and control blades, (2) the effect of safety/relief valve (SRV) actuations, (3) structural/steam reaction chemistry effects, (4) progressive relocation of core structures including candling of the fuel rod cladding, (5) failure of the core plate and formation of a debris bed in the reactor vessel bottom head, (6) bottom head dryout and reheating of the quenched debris, (7) failure of the bottom head penetrations, and (8) the time-dependent egress of molten core debris from the reactor vessel. These models have been discussed in the paper "Advanced Severe Accident Response Models for BWR Application," given at the Fifteenth Water Reactor Safety Information Meeting in October 1987 and to be published in a forthcoming topical issue of Nuclear Engineering and Design. Nevertheless, because of the important effects that the method of modeling of core plate failure, bottom head debris bed formation and melting, bottom head penetration failure, and the release of molten materials from the reactor vessel has upon subsequent conclusions regarding the characteristics and the timing of contact of the released core debris with the Mark I drywell shell, these models for events occurring in the bottom head are here discussed in greater detail than in the previous paper.

## II. BWRSAR Models for Core Plate Failure

The primary alignment function of the BWR core plate is to provide lateral guidance for the upper portion of the control rod guide tubes, as shown in Fig. 1. Each of the 185 control rod guide tubes supports four fuel assemblies grouped around a cruciform opening for the control rod blade. The core plate, which is two inches (5.1 cm) thick and

weighs 20,500 lb (9300 Kg)* supports only the outermost 24 assemblies of the 764 assemblies that make up the total core. The core plate is characterized by large holes provided for passage of the control rod guide tubes and smaller holes for the in-core instrument guide tubes as shown in the plan view of Fig. 2. In the BWRSAR models, molten materials moving downward during the early period of the core relocation phase of a severe accident attack and fail individual radial regions of the core plate, opening pathways for follow-on relocating debris to fall directly into the reactor vessel bottom head. Debris relocation and the effect upon the core plate are described in detail in the following paragraphs.

The models for candling of fuel rod cladding that have been incorporated into BWRSAR are essentially identical to those developed by R. M. Summers[1] for MELCOR. The effect of candling upon the progression of core damage has been discussed by Dingman et al.[2] In the BWRSAR code, the candling of molten clad and its associated mass of dissolved $UO_2$ leaves the upper portions of the fuel pellet stacks standing encased in thin $ZrO_2$ sheaths after all of the Zr metal has relocated downward. As the downward-moving candled material freezes, remelts, and freezes again on subsequently lower nodes, the lower portion of the core undergoes a thermal escalation due to the associated energy transport and due also to an increased metal/steam reaction, enhanced by the continual presentation of a fresh, unoxided material surface to the steam in the local environment. Eventually, the candling material contacts any remaining water above the core plate causing increased steaming, buildup of a quenched mass upon the core plate surface, and, after core plate dryout, rapid core plate heatup.

Since calculations and available experimental evidence indicate that the control blade and channel box material of the BWR core would relocate uniformly and very rapidly once the stainless steel and zirconium metal melting points are reached under severe accident conditions, candling models are not employed in the BWRSAR code for the molten control blade or channel box nodes. Rather, upon reaching the molten state, the nodal control blade or channel box material is transferred immediately downward onto the core plate. As long as water remains above the core plate, the molten material is quenched, causing an increased steaming rate. Eventually, if there is no water injection into the reactor vessel, core plate dryout will occur and there will be a temporary cessation of steam generation into the core region.

After core plate dryout, mass continues to build up on the core plate from the candling process and from relocated molten canister or control blade nodes, with associated core plate heatup. Each radial region of the core plate is predicted to fail due to the accumulated

---

*Dimensions given in this discussion pertain to the 251-in. ID BWR 4 reactor vessel installed at 1067 $MW_e$ plants such as Peach Bottom or Browns Ferry.

load and loss of strength when the regionally calculated mass-averaged debris/core plate temperature exceeds a user-specified temperature, usually 2000°F (1367K). In practice, the mass-averaged temperature increases so rapidly after core plate dryout that adjusting the assumed failure temperature has little effect on the calculated time of failure.

Each failed core plate region and its accumulated debris fall into the lower plenum producing a burst of steam as the fallen material is quenched. However, it is expected that the fuel pellet columns, encased in $ZrO_2$ sheaths, would remain standing since the weight of the fuel is supported by the control rod guide tubes, not by the core plate. After failure of a core plate region, additional relocating material in that region falls directly into the lower plenum. During the relocation process, material balances are performed to keep track of chemical species (such as Fe, $Cr_2O_3$, Zr, $UO_2$) as they accumulate on the core plate and in the lower plenum.

The rationale for the BWRSAR code methodology with respect to core debris relocation onto the core plate is provided by the results of the DF-4 experiment[3] conducted in the Annular Core Research Reactor (ACRR) at Sandia National Laboratories in November 1986, which confirm the predictions of earlier calculations with the BWRSAR models. In the experiment, the control blade melted first (as predicted in pretest calculations by BWRSAR models) and progressively and rapidly relocated to the bottom of the test section. In a post-test cross-section, the relocated control blade material appears to form an ingot cast in the shape of the zircaloy channel box at the very bottom of the test section, which is below the bottom of active fuel. Both the control blade and channel box wall portions of the DF-4 test section are more than 90% destroyed due to melting and relocation during the experiment, but the fuel pellet stacks are predominantly still standing. Relocated cladding blocks the base of the fuel rod regions of the experiment.

The DF-4 experiment, which had to fit within the ACRR, was designed to represent a short (0.5-m) length of uncovered fuel, channel box, and control blade in the upper region of a BWR core undergoing an unmitigated severe accident. It can be argued that in a full-length test section, the relocating molten control blade and channel box material might not travel all of the way to the experiment base before freezing. However, BWRSAR code predictions indicate that all axial sections of the control blades above the core water level would reach their melting points almost simultaneously as the temperature of the uncovered region of the core increases, and the same is true for the axial sections of the channel box walls. (It is a matter of relatively low-melting-point material sandwiched between higher-melting-point materials whose temperatures are rapidly rising; the very low thermal capacitance of the thin channel box walls also contributes to the observed phenomena.) There is no question, however, that the execution of an experiment using full-length representation of BWR control blade, channel box, and fuel rods is highly desirable to confirm these calculated results. If much of the relocated molten core debris were to not reach the core plate, but instead were to form a frozen crust above the plate, subsequent debris

bed formation and melting above the core plate would lead to an accident event sequence more like the Three Mile Island experience (PWR) than the sequence predicted by BWRSAR. Thus, the question of core plate survival in the BWR severe accident sequence is pivotal.

It should be noted that the BWRSAR models do predict retention and buildup of a debris bed above the core plate for cases in which the core plate is sufficiently cooled by reactor vessel water injection to forestall dryout, heatup, and structural failure. The required water injection rate is small if continuous, larger if the flow is intermittent and in both cases the integrated effect must be sufficient to prevent core plate failure but insufficient to terminate the accident. This scenario seems most unlikely for prolonged BWR severe accident sequences since any injection system, if available, is capable of injection rates ample to recover the core and terminate the accident although operator action (specified in existing written procedures) would be necessary to enhance the flow in some cases. For this reason, the BWRSAR models for the progression of the unmitigated severe accident are based upon the assumption of a total loss of injection such as would occur in short-term station blackout.

## III. Debris Bed Formation in the BWR Bottom Head

After regional failures of the core plate structure occur, debris including the failed portions of the core plate itself accumulates in the reactor vessel bottom head. The standing portions of the fuel pellet stacks are modeled to fall into the bottom head by radial column. Each of the radial columns collapses if and when its axially-averaged clad temperature reaches a user-input value [currently 4400°F (2700K)], at which very little of the fuel mass in the column has become molten. The envisioned failure mechanism is weakening, by overtemperature, of the $ZrO_2$ sheaths surrounding the fuel pellets and of the previously molten material that tends to weld the fuel pellet stack together. The falling masses are quenched by the water in the bottom head until the time of bottom head dryout.

The argument that the falling heated masses of core debris would be quenched in the reactor vessel bottom head is buttressed by the geometry of the structures and the large water mass present in the BWR lower head. For example, at the Browns Ferry nuclear plant there are 185 control rod guide tubes [11 inch (0.2794-m) outer diameter on a 12 inch (0.3048-m) pitch] in the vessel lower head; thus, within a unit cell the debris must pass through a 0.340 $ft^2$ (0.032-$m^2$) opening (see Fig. 3) that is 12 ft (3.7 m) in length. This, plus the fact that there is sufficient water in the bottom head [160,000-210,000 lbs (72,000-95,000 kg) depending on the temperature] to completely quench more than one molten core, leads to the assumption employed in BWRSAR that the relocated debris is quenched. It should be noted, given the progressive relocation methodology outlined above, that the majority of the debris (failed core plate regions or collapsed fuel columns) entering the lower plenum would be solid when it enters the water. The rate of quench of the

relocated debris is determined by state-of-the-art debris bed models (normally Lipinski's).

Displacement of water in the lower head by the accumulated debris is modeled by BWRSAR. Depending on the accident sequence, this displacement can result in water being forced into the core region even after core plate dryout has occurred; the core plate is cooled whenever this happens, however, given the state of the core, the water displaced above the core plate is rapidly boiled off.

As the relocated core material accumulates in the BWR reactor vessel bottom head, the BWRSAR models recognize three layers of debris. The bottom layer is comprised of mostly metallic debris (control blades, canisters, candled clad and dissolved fuel) that either had originally accumulated on the core plate before failure, or had subsequently relocated within the failed core plate regions before fuel pellet stack collapse. The middle layer is initiated by the first collapse of the fuel pellet stacks in a radial fuel column. Subsequent relocated materials, including failed core plate regions or additional collapsed fuel columns, are then added to the middle layer. The initial failure of the core plate and the formation of the bottom debris layer caused temporary bursts of steaming as the relocated debris was quenched; however, with the initiation of the middle layer, a constant heat source (the decay heat from the collapsed fuel columns) is introduced to the lower plenum reservoir. This results in a rapid continuous boiloff of the lower head water.

After bottom head dryout, the debris in the bottom and middle debris layers begins to heat up, and it is assumed that the debris thermally attacks and fails (at a user input debris temperature) the control rod guide tubes, which the debris completely surrounds to a depth of 6 to 9 ft (2-3 m). Since the control rod drive mechanism assemblies and the control rod guide tubes support the core, the remaining standing regions of the core collapse into the bottom head when these support structures fail. Thus, the top layer of the debris bed is formed when the control rod guide tubes fail. The material (stainless steel) of the control rod guide tubes is assumed to be subsumed into the surrounding debris of the bottom, middle, and upper layers, as appropriate.

The upper debris layer consists of the collapsed outer portion of the core, any unfailed core plate regions and accumulated debris remaining at the time of control rod guide tube failure, the top guide (which is normally calculated to melt during core heatup, but is not added to the debris until control rod guide tube failure), and the portion of the control rod guide tubes that is not subsumed into the bottom and middle debris layers. The vessel structural masses as they exist at the initiation of the calculation (prior to oxidation) that are normally included in the formation of the bottom head debris bed are outlined in Table 1.

With control rod guide tube failure and collapse of the outer regions of the core, the formation of the bottom head debris bed is complete. As described, it is discretized on formation into three

layers separated vertically; additionally, each layer is discretized into radial nodes resulting in the debris bed nodalization illustrated in Fig. 4. The lower head of the vessel is modeled at each debris node in contact with the wall; each wall segment is also discretized radially into nodes with the outside nodes having the capability of transferring heat to the drywell atmosphere. Heat generation within the debris bed is associated with the decay heat of the fuel and the chemical reaction of steam from the vessel atmosphere with the zirconium metal of the debris.

In the heat balances for each debris node, normal heat transfer mechanisms are employed for node-to-node and node-to-wall transfer. Additionally, radiation and convection from the surface nodes to the vessel gaseous contents and to structures above the debris bed are considered. Radiation to the shroud and axial conduction along the vessel wall causes boiloff of water remaining in the downcomer jet pump region. Also included in the nodal heat balances are the change-of-phase heat of fusion of species (or eutectics) as they melt or refreeze within the bed. Mass balances track species as they melt, migrate, refreeze, and eventually egress from the vessel.

## IV. Reactor Vessel Bottom Head Penetration Failure

As the temperature of the debris bed increases, materials begin to melt, migrate, freeze, and remelt. Eventually, temperatures near the wall are such that penetrations fail and a path is opened for gas blowdown and passage of molten material from the vessel. In general, most of the debris bed is still solid when penetration failure and vessel blowdown occur, so that relatively little of the debris is expelled during blowdown.

There are more than 200 reactor vessel bottom head penetrations in a BWR reactor vessel of the size employed at Browns Ferry, where there are 185 control rod drive mechanism assembly penetrations, 55 instrument guide tube penetrations, and a drain line near the low point in the bottom head. It seems certain that the initial pressure boundary failure under the conditions of bottom head debris dryout would occur through the vessel penetrations, not by melt-through of the bottom head itself. The lower head of a BWR is clad with Inconel while the penetrations are stainless steel. Cross sections of the control rod drive mechanism assembly and instrument tube penetrations and their weldments are illustrated in Fig. 5. The assumed method of failure of the penetration structure is by creep/rupture of the Inconel/stainless steel welds by which the penetration assemblies are held within the reactor vessel. (J. T. Han in his uncertainty paper on "Natural Circulation in Reactor Coolant System," Chapter 2 of NUREG/1265, gives guidance on the time required at various temperatures for this failure mechanism.)

The BWRSAR models also provide for a loss of the reactor vessel pressure boundary that is initiated by failure of the in-core housing guide tubes associated with the local power range detectors (Fig. 6) and the source and intermediate range detectors (Fig. 7). Melting of upper

portions of these guide tubes within the bottom head debris bed would provide an annular flow path within the tubes by which molten metals could pour through the reactor vessel wall. Passage of molten metal into the ex-vessel portion of a guide tube is assumed sufficient to cause immediate failure of the tube pressure boundary.

Since the bottom layer of debris is comprised almost entirely of metals while $UO_2$ constitutes more than half of the middle layer, the middle layer heats up much more rapidly after bottom head dryout than does the bottom layer. For this reason, melting of the in-core housing guide tubes would occur first in the middle layer. The criteria employed in BWRSAR for initiation of reactor vessel blowdown through the in-core instrument housing guide tubes are first, that the middle layer debris bed temperature be above the melting point of stainless steel and second, that the level of liquid metal within the reactor vessel has risen into the middle debris layer so that molten metal is available to pour into the failed portion of the tubes.

After failure of the penetrations, a leak path from the vessel to the drywell atmosphere is created. Subsequently, the vessel gaseous content blows down if the reactor vessel is at pressure or, if the vessel is depressurized, slowly leaks out as the gas temperature increases and the water in the reactor vessel downcomer region surrounding the jet pumps is boiled off. The leak path for the steam generated from the water surrounding the jet pumps is up through the downcomer region, down through the core region, and out through the debris bed. Thus, the steam available in the vessel at the time of penetration failure would pass through the debris and would react with the zirconium metal during its passage. Only the steam/zirconium reaction is modeled in the debris bed models, but this is a major heat source in the nodal energy balances, particularly for cases in which the reactor vessel is pressurized at the time of penetration failure. Stainless steel oxidation in the bottom head debris is not modeled since this is expected to be a secondary effect and because the temperatures at which rapid stainless steel oxidation occurs are close to the melting point; thus stainless steel tends to relocate rather than to undergo excessive oxidation. The result is that much of this metal is expected to leave the vessel in a molten state without oxidizing. Obviously, there are uncertainties in this area. These concerns definitely indicate the need for experimental resolution because a great amount of hydrogen is predicted to be generated in the vessel bottom head via the BWRSAR modeling approach.

Application of the current BWRSAR models leads to a protracted, time-dependent pour of debris from the reactor vessel. Molten material moves downward from one node to another within the debris bed as long as void space remains within the lower node. Once the interstitial spaces in the lower nodes are filled, the molten liquid can move horizontally within the bed as necessary to keep the liquid level approximately constant within a layer. An exception occurs in the case of the two middle layer outermost nodes after penetration failure occurs in this layer; for these two nodes, simultaneous movement downward to the void space in the (single) underlying node and horizontally to exit the vessel through

the failed penetration can occur. In all cases, the rate of movement of molten material through the debris bed is controlled by a user-input time constant, usually set at one minute. Thus, for example, if the calculational timestep is 0.2 minute, 20% of the molten material within a node can move horizontally or vertically (or both, for the outermost middle layer nodes) each timestep.

## V. References


1. R. M. Summers, "Degraded Core Modeling in MELCOR," Proceedings of the Topical Meeting on Reactor Physics and Safety, Saratoga Springs, NY, September 1986.

2. S. E. Dingman et al., "Analysis of Peach Bottom Station Blackout with MELCOR," Fourteenth Water Reactor Safety Research Information Meeting, National Bureau of Standards, Gaithersburg, MD, October 30, 1986.

3. R. O. Gauntt, DF-4 BWR Control Blade/Channel Box Fuel Damage Experiment, Reactor Safety Research Semiannual Report, January-June 1987, Volume 37, Chapter 3, NUREG/CR-5039 (1 of 2) SAND87-2411 (1 of 2), January 1988.

Table 1. BWR reactor vessel structures included in bottom head debris bed formation

| | Initial Masses | |
|---|---|---|
| | kg | lbs |
| Core constituents: | | |
| a. Zircaloy | | |
| 1. Cladding | 37,000 | 81,500 |
| 2. Channel box | 22,900 | 50,400 |
| 3. Spacers | 2,700 | 5,900 |
| b. $UO_2$ fuel | 172,500 | 380,300 |
| c. Stainless steel | 16,300 | 35,800 |
| d. $B_4C$ powder | 1,150 | 2,500 |
| Stainless steel structures: | | |
| a. Top guide | 6,900 | 15,200 |
| b. Core plate | 9,300 | 20,500 |
| c. Control rod guide tubes | 88,680 | 195,500 |
| Total | 357,430 | 787,600 |

Table 2. Default values for eutectic mixture and constituent melting points provided within the BWRSAR code

| | Melting Temperature | |
|---|---|---|
| Constituent/Eutectic | K | °F |
| SS/B/Zr | 1422 | 2100 |
| SS/Zr | 1589 | 2400 |
| SS | 1672 | 2550 |
| Zr/B | 2033 | 3200 |
| $Zr(O)/UO_2$ #1 | 2125 | 3365 |
| $Zr(O)/UO_2$ #2 | 2673 | 4350 |
| $ZrO_2$ | 2978 | 4900 |
| $UO_2$ | 3070 | 5066 |

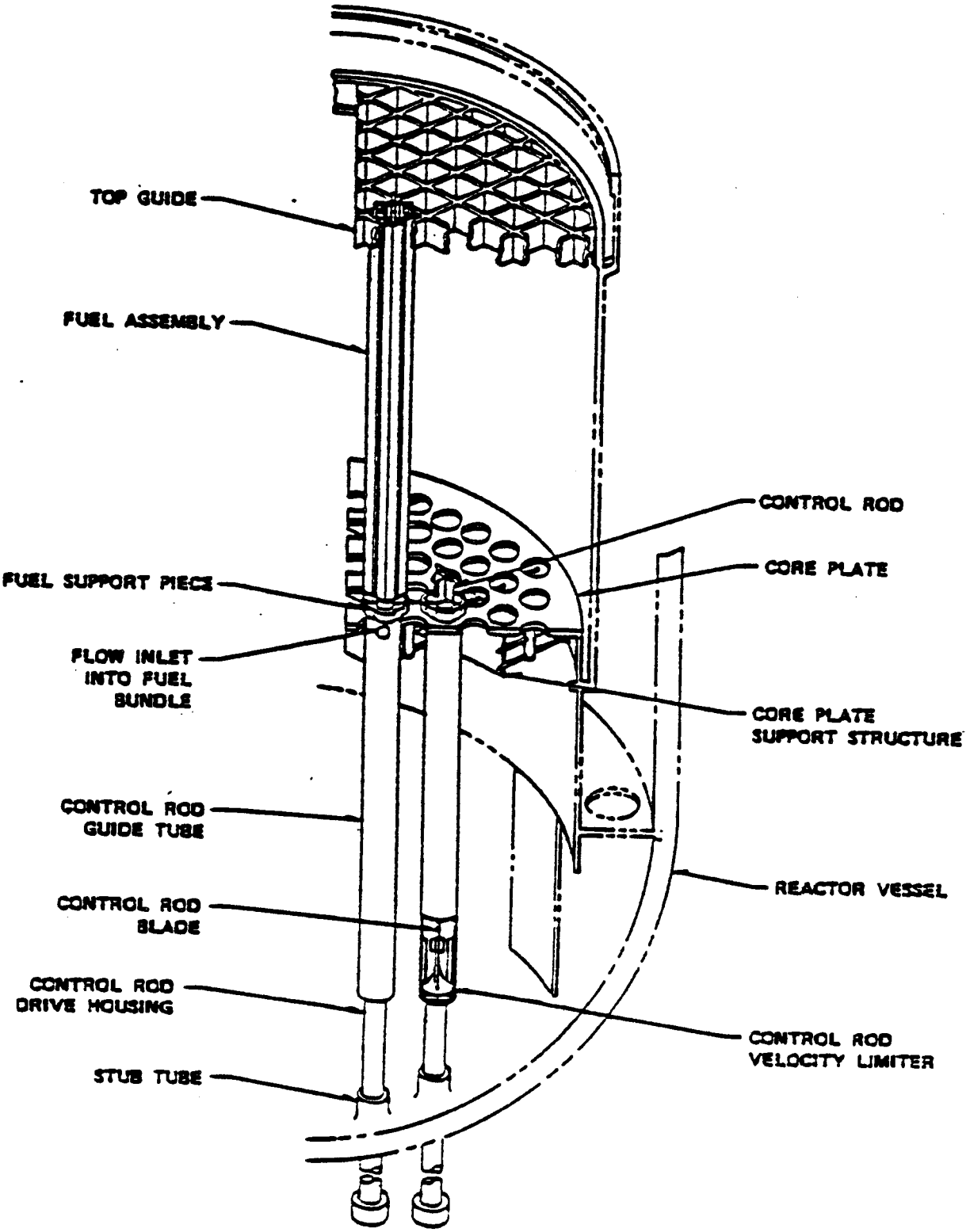


Fig. 1. The BWR core plate separates the core region from the reactor vessel bottom head. The core fuel assemblies are supported by the fuel support pieces, the control rod guide tubes, the control rod drive housings, and the stub tube welds.

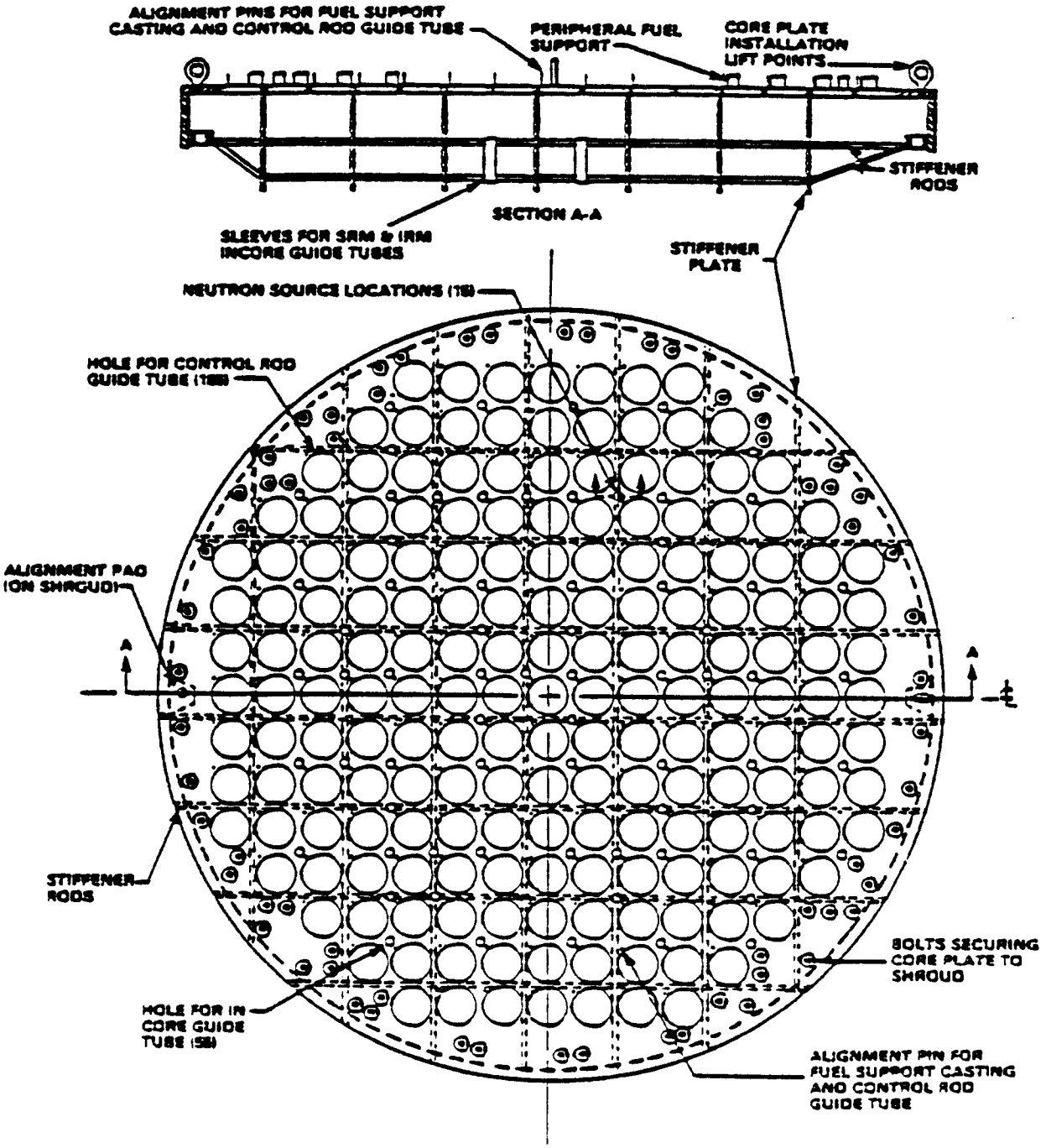


Fig. 2. Elevation and plan views of the BWR core plate.

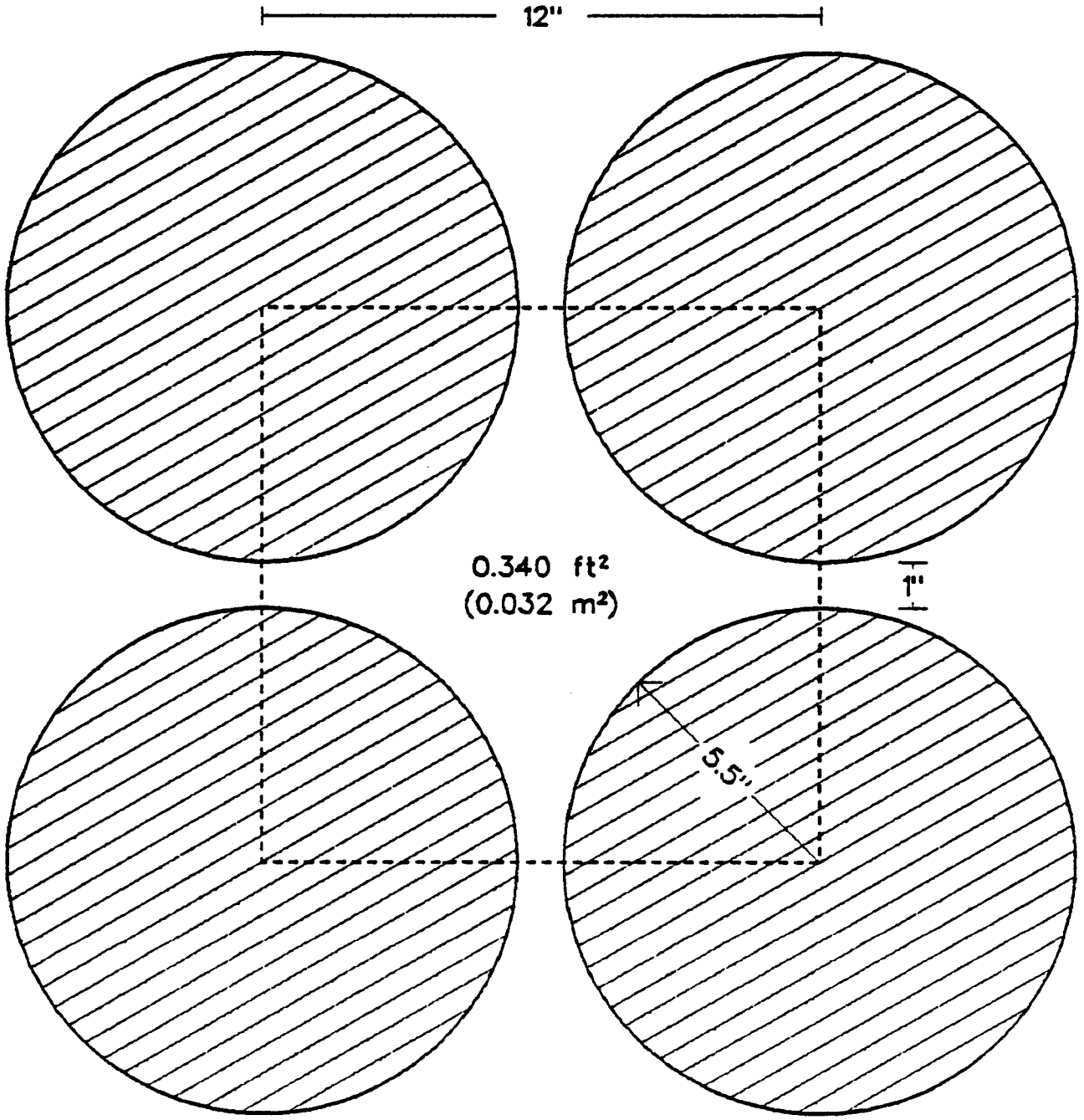


Fig. 3. Control rod guide tube spacing and available open flow area in the BWR reactor vessel bottom head.

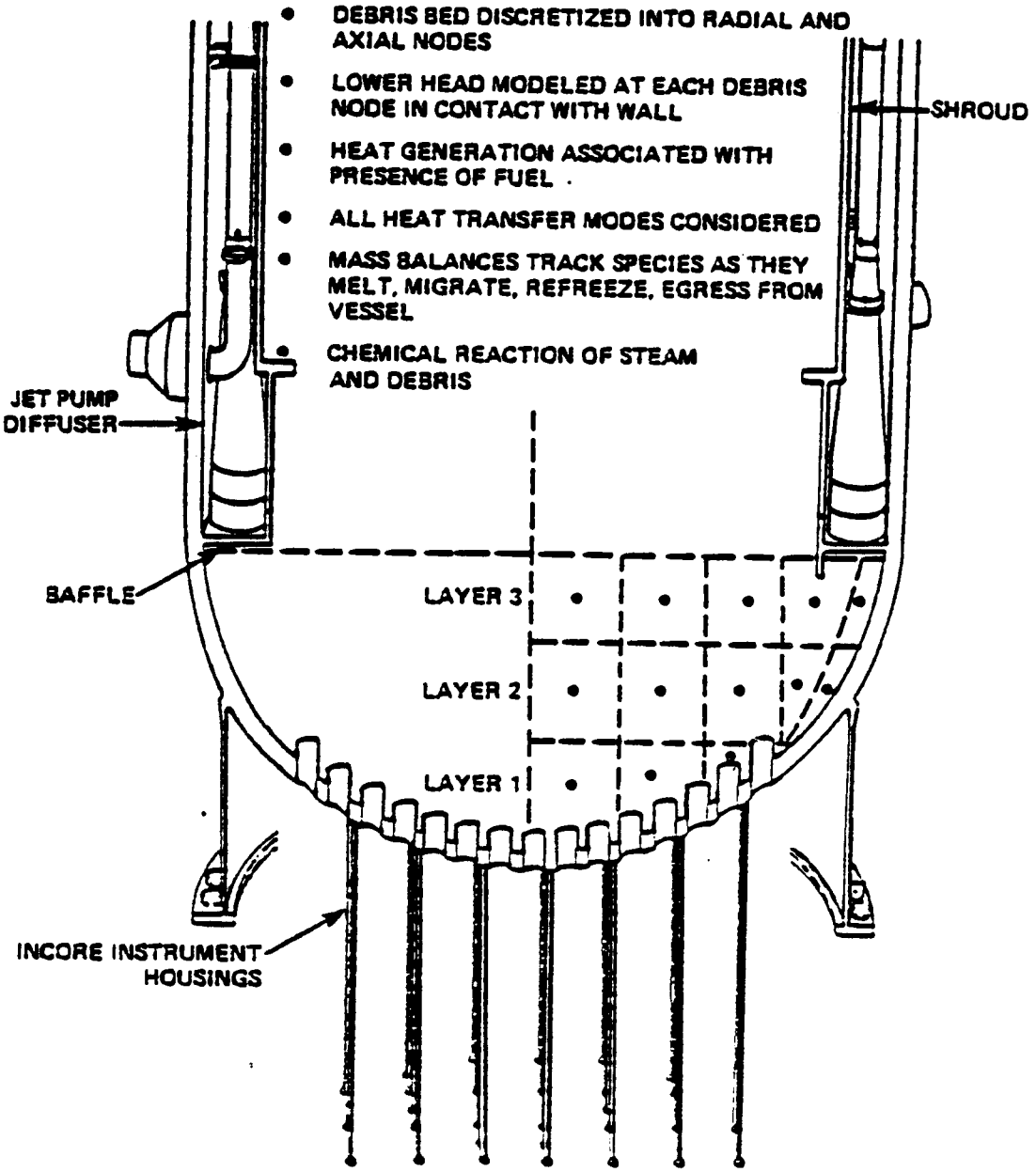


Fig. 4. Description of models and illustration of noding employed for the BWR reactor vessel bottom head debris bed.

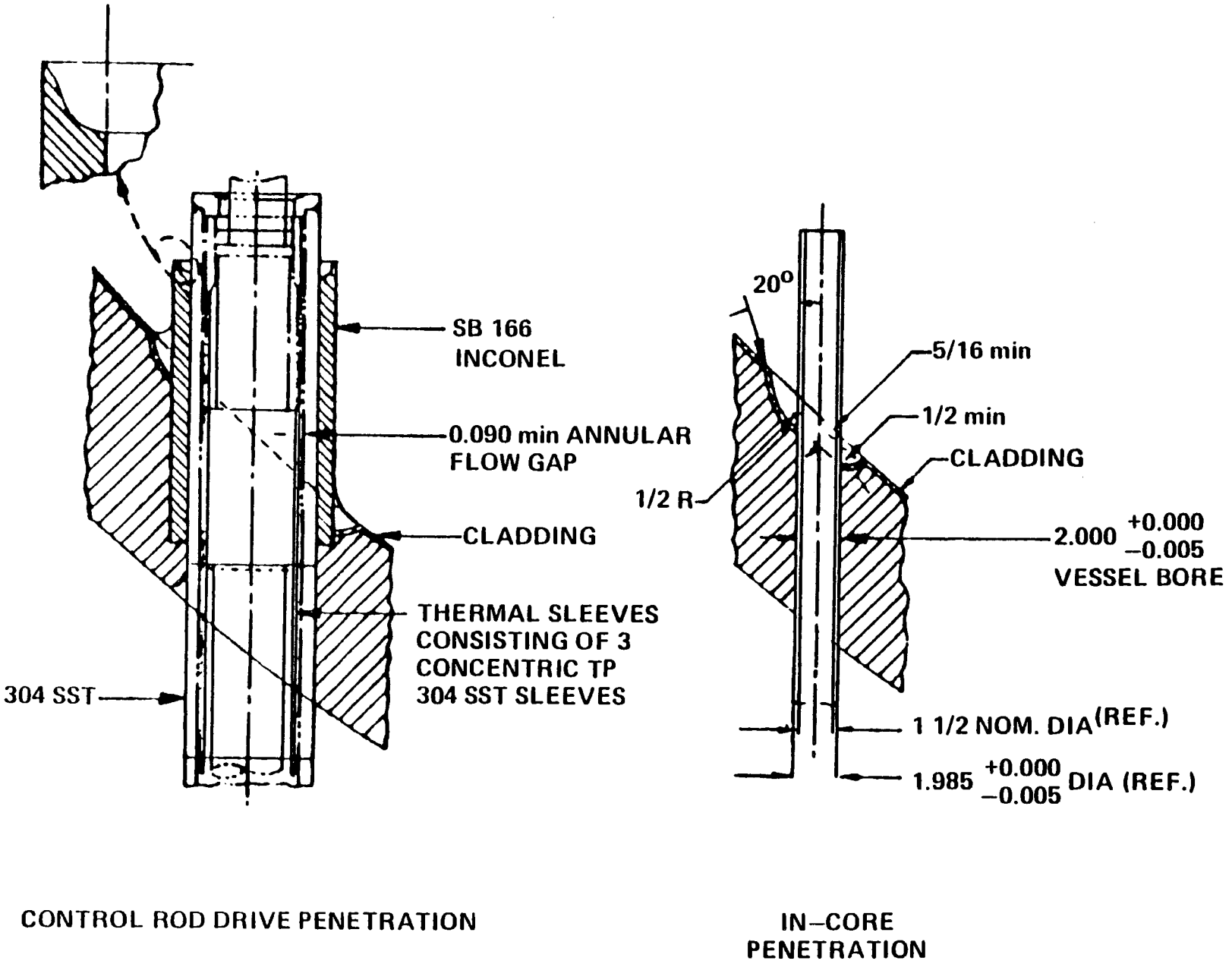


Fig. 5. Control rod drive mechanism assembly and in-core instrument guide tube penetrations through the BWR reactor vessel bottom head. Dimensions are given in inches.

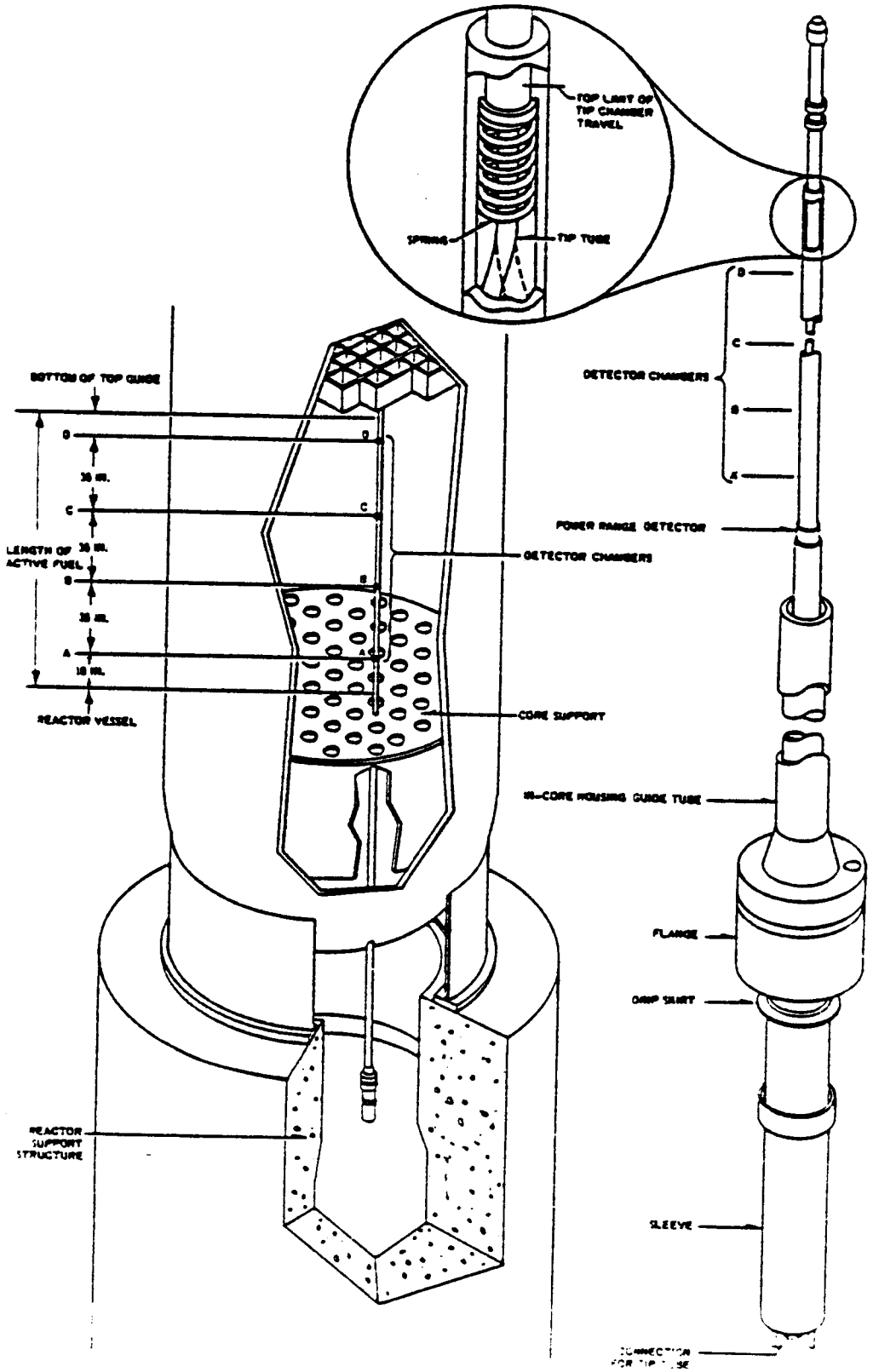


Fig. 6. Mechanical arrangement of one of the 43 Local Power Range Detector assemblies. The annular gap clearance between the in-core housing guide tube and the instrument tube is specified as 0.40 inches.

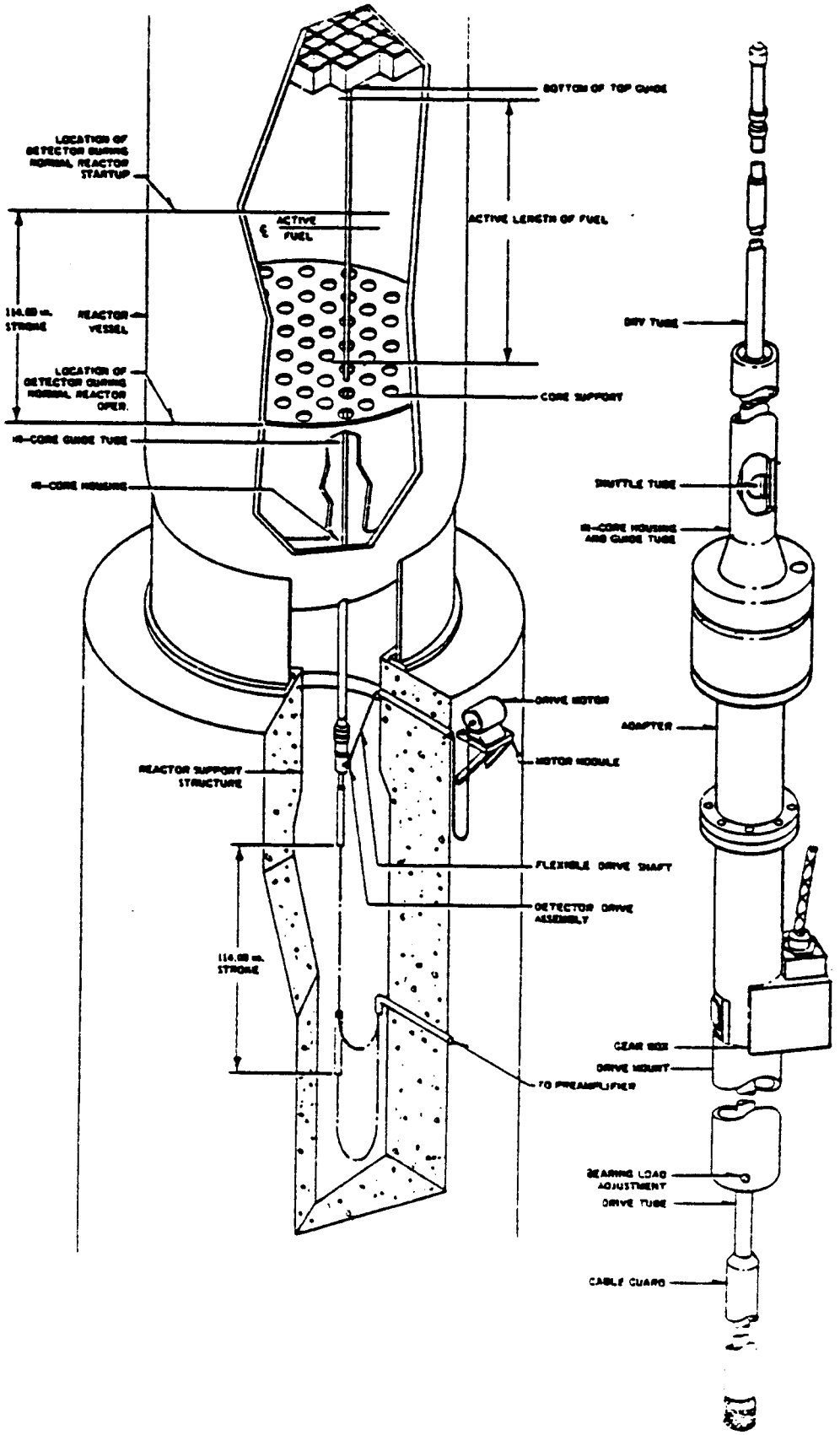


Fig. 7. Mechanical arrangement of the four source range and eight intermediate range detector in-core instrument assemblies.