MARTIN MARIETTA ENERGY SYSTEMS LIBRARIES

3 4456 0289149 5

ORNL/TM-11008

ornl

OAK RIDGE NATIONAL LABORATORY

MARTIN MARIETTA

Shipping and Storage Cask Data for Spent Nuclear Fuel

E. R. Johnson
K. J. Notz

OAK RIDGE NATIONAL LABORATORY
CENTRAL RESEARCH LIBRARY
CIRCULATION SECTION
4500N ROOM 175
LIBRARY LOAN COPY
DO NOT TRANSFER TO ANOTHER PERSON
If you wish someone else to see this report, send in name with report and the library will arrange a loan.

OPERATED BY
MARTIN MARIETTA ENERGY SYSTEMS, INC.
FOR THE UNITED STATES
DEPARTMENT OF ENERGY

Printed in the United States of America. Available from
National Technical Information Service
U.S. Department of Commerce
5285 Port Royal Road, Springfield, Virginia 22161
NTIS price codes—Printed Copy A03 Microfiche A01

This report was prepared as an account of work sponsored by an agency of the United States Government. Neither the United States Government nor any agency thereof, nor any of their employees, makes any warranty, express or implied, or assumes any legal liability or responsibility for the accuracy, completeness, or usefulness of any information, apparatus, product, or process disclosed, or represents that its use would not infringe privately owned rights. Reference herein to any specific commercial product, process, or service by trade name, trademark, manufacturer, or otherwise, does not necessarily constitute or imply its endorsement, recommendation, or favoring by the United States Government or any agency thereof. The views and opinions of authors expressed herein do not necessarily state or reflect those of the United States Government or any agency thereof.

ORNL/TM-11008
Dist. Categories
UC-70, UC-71, UC-85, and UC-510

Chemical Technology Division

SHIPPING AND STORAGE CASK DATA FOR SPENT NUCLEAR FUEL

E. R. Johnson*
K. J. Notz

*E. R. Johnson Associates, Inc., Oakton, VA, under contract no. 41X-SA094V to Oak Ridge National Laboratory.

November 1988

NOTICE This document contains information of a preliminary nature. It is subject to revision or correction and therefore does not represent a final report.

Prepared for the
U.S. Department of Energy
Office of Civilian Radioactive Waste Management
Washington, D.C. 20585

Prepared by the
OAK RIDGE NATIONAL LABORATORY
Oak Ridge, Tennessee 37831
operated by
MARTIN MARIETTA ENERGY SYSTEMS, INC.
for the
U.S. DEPARTMENT OF ENERGY
under
Contract No. DE-AC05-84OR21400

MARTIN MARIETTA ENERGY SYSTEMS LIBRARIES

3 4456 0289149 5

TABLE OF CONTENTS

INTRODUCTION 1

SUMMARY TABLE 1 2
SUMMARY TABLE 2 3

STORAGE AND STORAGE/TRANSPORT CASKS:
- CASTOR-1C 4
- CASTOR V/21 8
- TN-24P 12
- TN-24 16
- TN-REG/BRP 17
- MC-10 20
- REA-2023 24
- NAC S/T 28
- C-E DRY CAP 30
- NUPAC CP-9D 32
- NUHOMS 0708 35

SHIPPING CASKS:
- TN-8 39
- TN-9 41
- NFS-4 (NAC-1) 44
- NLI 1/2 48
- NLI 10/24 50
- IF-300 52

DISTRIBUTION 57

INTRODUCTION

This document is a compilation of data on casks used for the storage and/or transport of commercially generated spent fuel in the U.S. based on publicly available information.

In using the information contained in the following data sheets, the reader should understand that the data have been assembled from published information, which in some instances was not internally consistent. Moreover, it was sometimes necessary to calculate or infer the values of some attributes from available information. Nor was there always a uniform method of reporting the values of some attributes; for example, an outside surface dose of the loaded cask was sometimes reported to be the maximum acceptable by NRC, while in other cases the maximum actual dose rate expected was reported, and in still other cases the expected average dose rate was reported. In view of the foregoing, and the fact that in many cases the design of a cask/module can be modified or tailored to meet a specific requirement, it is recommended that the reader contact the cask/module vendor for his current advice on the matter before making any final decision with respect to the acceptability or unacceptability of a specific attribute.

A summary comparison of the principal attributes of storage and transportable storage casks is shown in Table 1; a similar comparison for shipping casks is shown in Table 2. References to source data are provided on the individual data sheets for each cask. These data are current as of April 1988.

TABLE 1

STORAGE AND STORAGE/TRANSPORT CASKS FOR SPENT FUEL

	CASTOR-IC	CASTOR V/21	TN-24P	TN-24	TN-REG/ BRP	MC-10	REA-2023	NAC S/T	C-E Dry Cap	NUPAC CP-90[h]	NUHOMS 0708
Type	Storage	Storage	Storage/ Transport	Storage	Storage/ Transport	Storage	Storage	Storage/ Transport	Storage/ Transport	Storage	Storage
Capacity (assys)											
Intact SF	16 BWR	21 PWR	24 PWR	24 PWR 52 BWR	40 PWR 85 BWR [b]	24 PWR	24 PWR 52 BWR	26 PWR[f]	24 PWR 60 BWR	9 PWR	7 PWR
Consolidated Fuel Rods	21 BWR	42 PWR	48 PWR	48 PWR 104 BWR	-	48 BWR	48 PWR 104 BWR	56 PWR 122 BWR	48 PWR 100 BWR	18 PWR	-
Weight-Loaded (tons)[a]	81	117	100	100	103/98	120	98	100	111/113	88	11[c]
Design Heat Rejection (kW)[a]	14.4	28	20.6	24	5	13.5	44.6	26[g]	24	5.4	7
Peak Clad Temp. (°C)[a]	365	365	221	375	375	336	304	360	355	290	380
Mat'ls. of Construction											
Cask Body	Nodular Cast Iron	Nodular Cast Iron	Forged Steel	SA350, Gr. LFI	Forged Steel	Forged Steel	Pb/SS	Pb/SS	Steel	Concrete	Concrete[d]
Basket	Borated SS	SS/Borated SS	Al/B	SS/B, Cu Plate	SS/B	SS Grid/ SS Cell w/Boral Plates	SS w/ Boral Inserts	Al	SS	Steel	SS/Pb in ends[e]
Neutron Shield	Polyethylene	Polyethylene	Resin-Sides; Lid-Polypropylene	Polyester Resin	None	BISCO N-3	Gylcol & Water	BISCO NS4FR	BISCO	Concrete/ RX-277	Concrete[d]
Cavity Atmosphere	He	He	He	N or He	Inert	He	He	He	He	Inert	He
Licensing Status	Licensed	Licensed	Applied For-Storage	Applied For	Applied For-Transport	Licensed	Applied For	Applied For-Storage	Applied For	Applied For	Licensed
No. in Existence in U.S. (or on order)	1	6	1	0	2	1	1	1	0	0	3

[a] For intact fuel assemblies

[b] Short assemblies, double stacked

[c] Weight of canister only -- not concrete storage module

[d] Refers to NUHOMS concrete storage module

[e] Refers to NUHOMS canister

[f] 31 PWR w/burnup credit

[g] 16 kw for burnup credit version

[h] applies for CP-9W

TABLE 2

SHIPPING CASKS FOR TRANSPORT OF LWR SPENT FUEL

	TN-8	TN-9	NFS-4 (NAC-1)[a]	NLI 1/2	NLI 10/24[b]	IF-300
Type	Overweight Truck	Overweight Truck	Legal Weight Truck	Legal Weight Truck	Rail	Rail
Capacity (assemblies)	3 PWR	7 BWR	1 PWR 2 BWR	1 PWR 2 BWR	10 PWR 24 BWR	7 PWR 18 BWR
Weight (tons)[c]						
Loaded	39.3	39.1	23	23.1	96.5	70
Empty	36.9	36.8	22	22.3	89	65
Design Heat Rejection (kW)	35.5	24.5	11.5	10.6	70	11.7
Shielding						
Gamma	Lead & Steel	Lead & Steel	Lead & Steel	Lead, Uranium & Steel	Lead & Steel	Uranium & Steel
Neutron	Borated Resin (Solid)	Borated Resin (Solid)	Borated Water & Antifreeze	Water & Antifreeze	Water & Ricorad	Water & Antifreeze
Cavity Coolant	Air	Air	Air	He[d]	He	Water
Licensing Status	Licensed	Licensed	No Longer Licensed	Licensed	No Longer Licensed	Licensed
No. Casks Available in U.S.	4	2	7	5	2	4

[a]May be used for on-site transfers of spent fuel

[b]Needs new baskets

[c]Weight does not include impact limiters, yoke, etc. -- only bare cask

[d]Air if heat is less than 2.5 kw

CASTOR-IC

(1) Type	Storage
(2) Manufacturer/Vendor	GNSI
(3) Capacity (assys)	
(a) Intact SF	16 BWR
(b) Consolidated Fuel Rods	21 BWR
(4) Weight (tons)	
(a) Loaded	81.1
(b) Empty	76.6
(5) Thermal	
(a) Design Heat Rejection (kW)	14.4 (intact) 15.6 (consolidated)
(b) Peak Clad Temperature (^{o}C)	365 (intact) 348 (consolidated)
(6) Shape	Rounded Square
(7) Dimensions	
(a) Overall Length (in)	216.9
(b) Overall Cross Section (in)	68.1
(c) Cavity Length (in)	179.5
(d) Cavity Cross Section (in)	26.2
(e) Wall Thickness, w/o fins (in)	17.3
(f) Cooling Fin Length (in)	4.7
(g) Lid Thickness (in)	21.7
(h) Bottom Thickness (in)	17.6
(i) Basket Length (in)	172.0
(j) Basket Cross Section (in)	25.2
(k) Thickness of Basket Spacers	0.4
(8) Neutron Shield	
(a) No. Rods	80
(b) Rod Diameter (in)	2.4
(c) Side Thickness (in)	-
(d) Lid Thickness (in)	2.4
(e) Bottom Thickness (in)	1.6
(9) Materials of Construction	
(a) Cask Body	Nodular Cast Iron (Ni-Plated Inside)
(b) Basket	Borated SS
(c) Neutron Shield	Polyethylene
(10) No. Cooling Fins	48
(11) Cavity Atmosphere	He
(12) Cavity Pressure (psia)	11.8
(13) Outside Surface Dose (mR/hr)	20 av./200 max
(14) Maximum Leak Rate (l/s)	10^{-7}

(15) Licensing Status NRC approved TSAR for storage Spring 1985 (10CFR71)

(16) Comments A single CASTOR-IC cask is available in the U.S. and is currently at the TVA Browns Ferry Plant.

References

(1) D. R. Rector et al, Castor-1C Spent Fuel Storage Cask Decay Heat, Heat Transfer, and Shielding Analyses, PNL-5974, December 1986

(2) D. R. Rector et al, COBRA-SFS Thermal - Hydraulic Analysis of the CASTOR-1C and REA-2023 BWR Storage Casks Containing Consolidated Spent Fuel, PNL-5802, December 1986

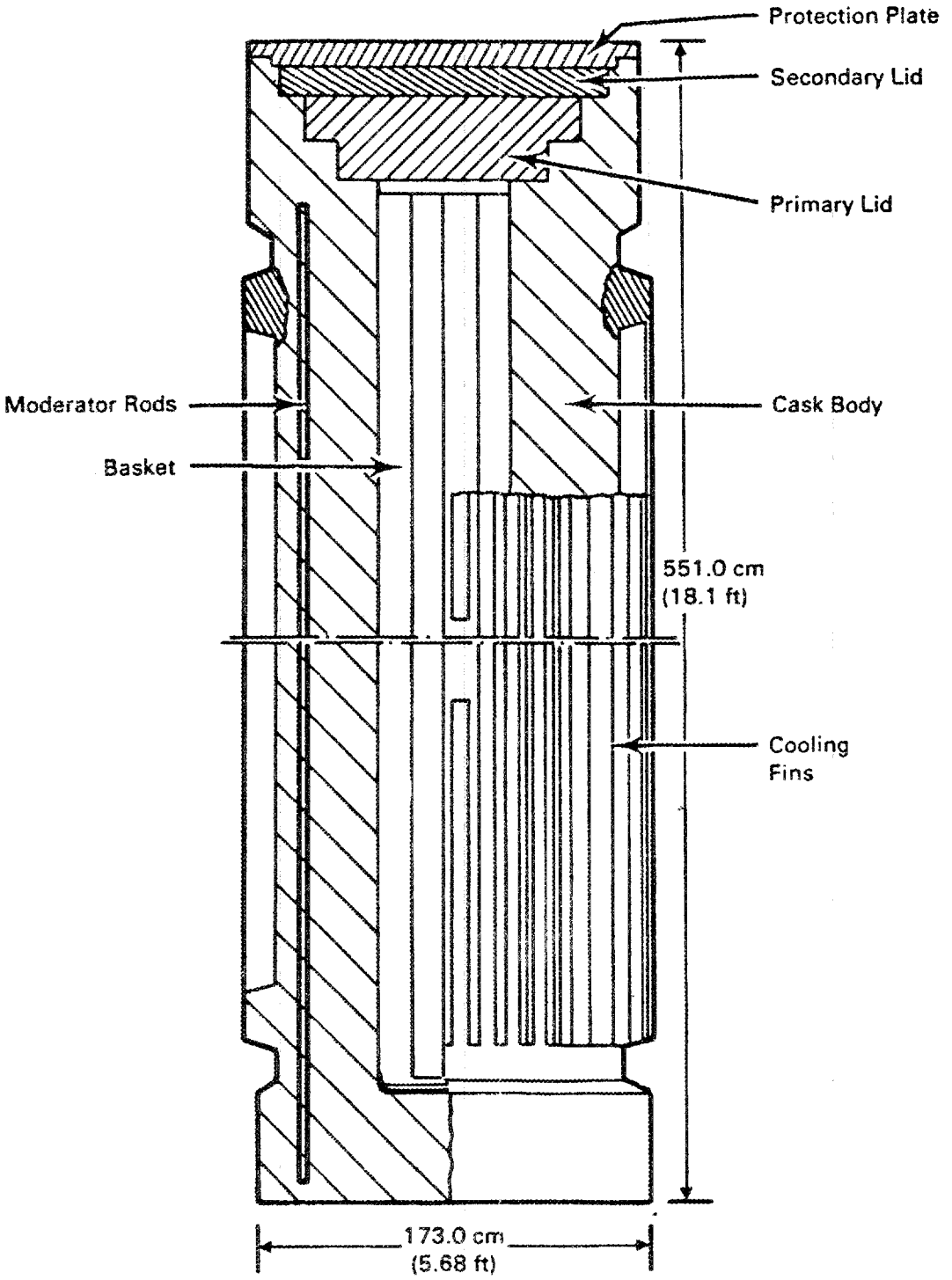

ELEVATION VIEW OF THE CASTOR-1C CASK

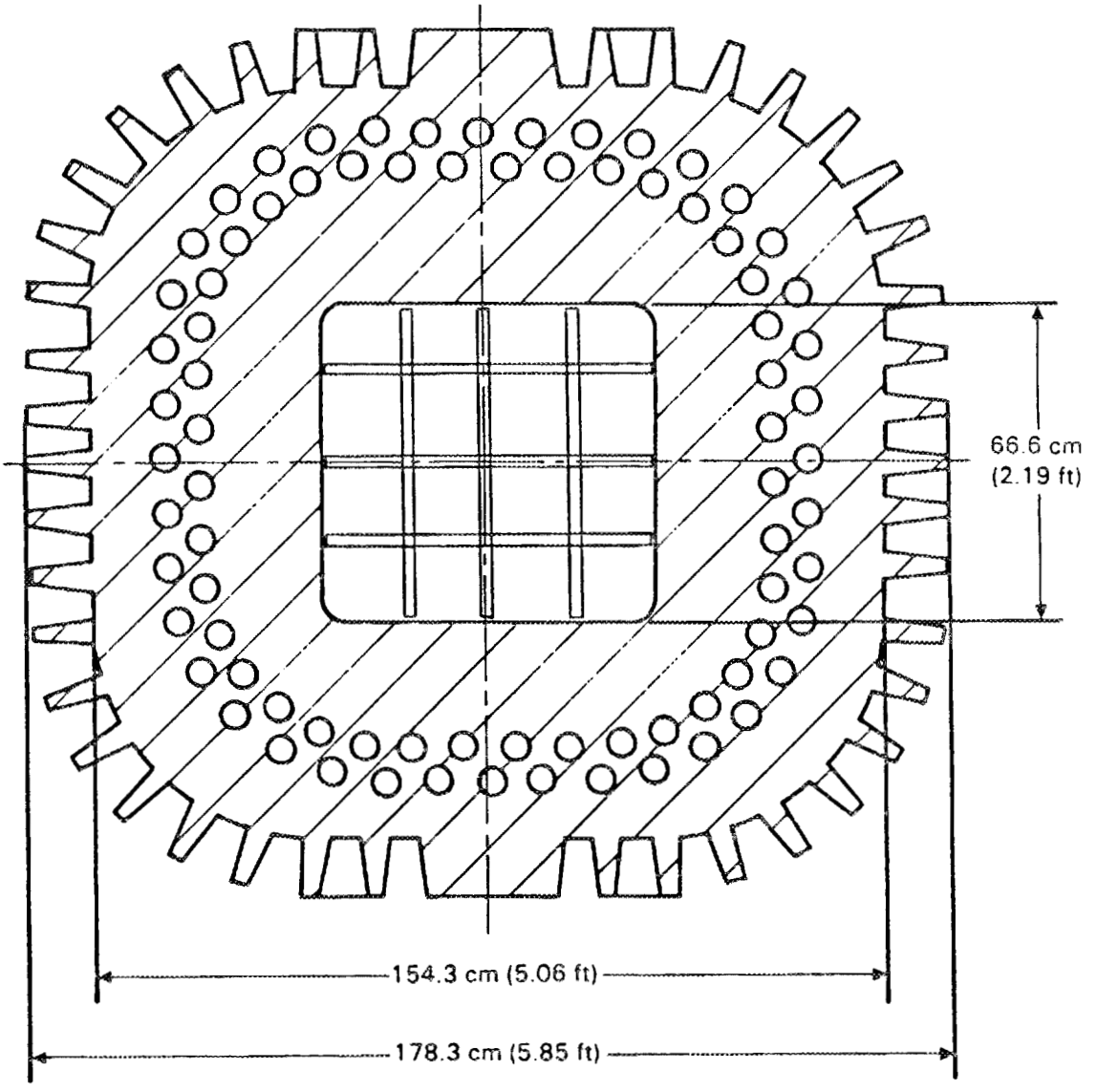

CROSS SECTION OF THE CASTOR-1C CASK

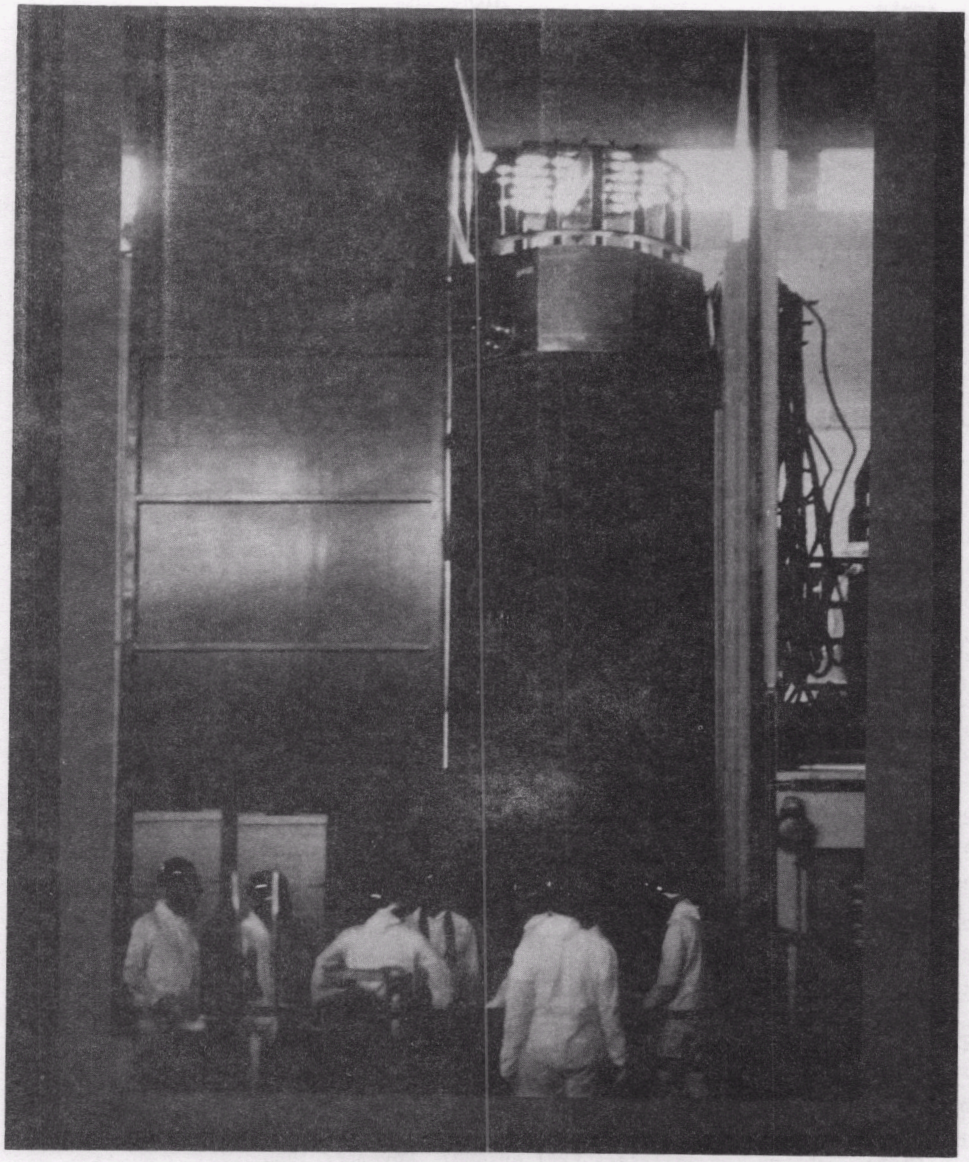

PHOTOGRAPH OF CASTOR-1C CASK

CASTOR V-21

(1) Type	Storage
(2) Manufacturer/Vendor	GNSI
(3) Capacity (assys)	
(a) Intact SF	21 PWR
(b) Consolidated Fuel Rods	42 PWR
(4) Weight (tons)	
(a) Loaded	117
(b) Empty	102
(5) Thermal	
(a) Design Heat Rejection (kW)	28 (intact) N/A (consolidated)
(b) Peak Clad Temperature (^{o}C)	365 (intact-horizontal) 352 (intact-vertical)
(6) Shape	Cylindrical
(7) Dimensions	
(a) Overall Length (in)	192.4
(b) Overall Diameter (in)	93.9
(c) Cavity Length (in)	163.5
(d) Cavity Diameter (in)	60.1
(e) Wall Thickness, w/o fins (in)	15.0
(f) Cooling Fin Length (in)	N/A
(g) Lid Thickness (in)	15.0
(h) Bottom Thickness (in)	18.1
(i) Basket Length (in)	161.8
(j) Basket Diameter (in)	60.0
(k) Thickness of Basket Spacers	N/A
(8) Neutron Shield	
(a) No. Rods	N/A
(b) Rod Diameter (in)	2.4
(c) Side Thickness (in)	-
(d) Lid Thickness (in)	None
(e) Bottom Thickness (in)	None
(9) Materials of Construction	
(a) Cask Body	Nodular Cast Iron (Ni-Plated Inside)
(b) Basket	SS/Borated SS
(c) Neutron Shield	Polyethylene
(10) No. Cooling Fins	73
(11) Cavity Atmosphere	Helium
(12) Cavity Pressure (psia)	N/A
(13) Outside Surface Dose (mR/hr)	200 max.
(14) Maximum Leak Rate (l/s)	N/A

(15) Licensing Status NRC approved TSAR for storage in Fall 1985.

(16) Comments A CASTOR V/21 was successfully tested at INEL. Five (5) casks ordered by Virginia Power Surry Station (Independent Spent Fuel Storage Installation). GNSI is pursuing transportation licensing effort.

References

(1) Electric Power Research Institute, The Castor-V/21 PWR Spent-Fuel Storage Cask: Testing and Analyses, EPRI NP-4887, November 1986

(2) Robert T. Anderson and Victor J. Barnhart, Castor V Spent Fuel Cask 1985-1986 Status Update, INMM Spent Fuel Storage Seminar III, Washington, D.C., January 1986

N/A means not available.

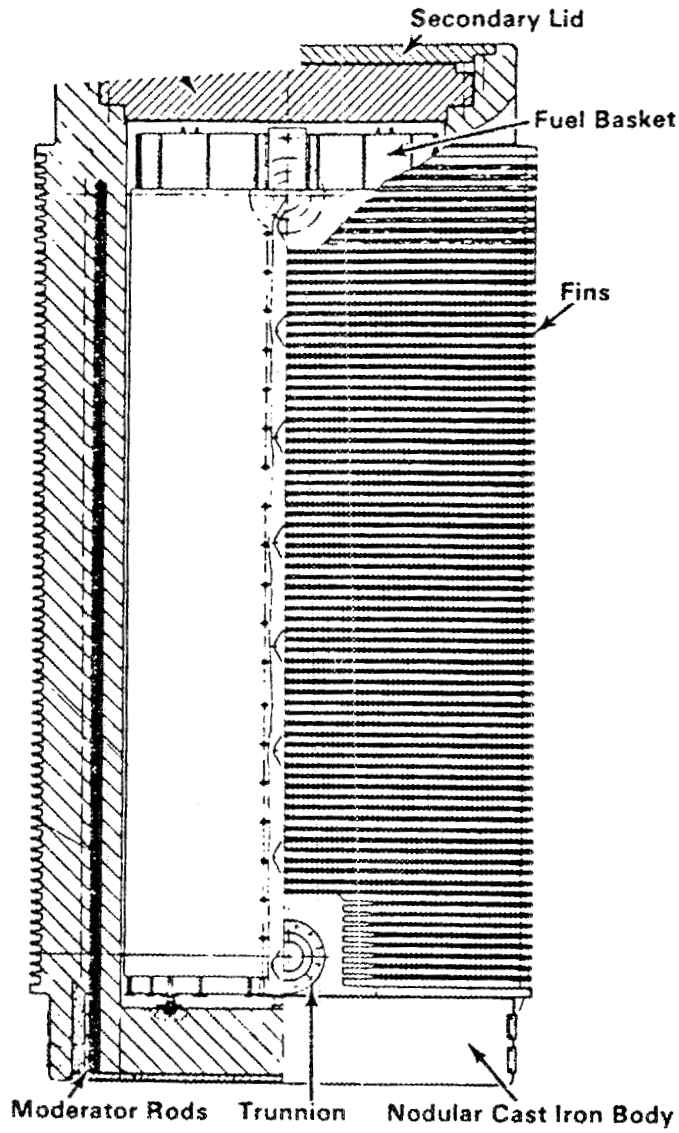

CASTOR V/21 PWR SPENT FUEL STORAGE CASK

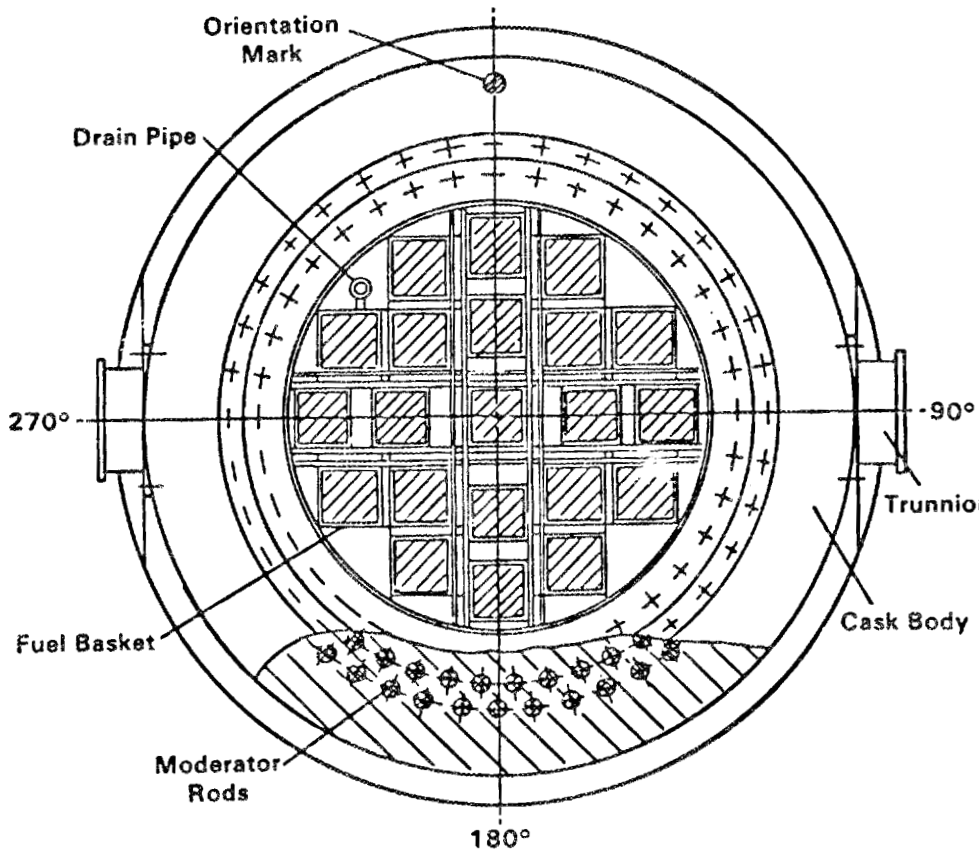

CASTOR V/21 CASK CROSS SECTION

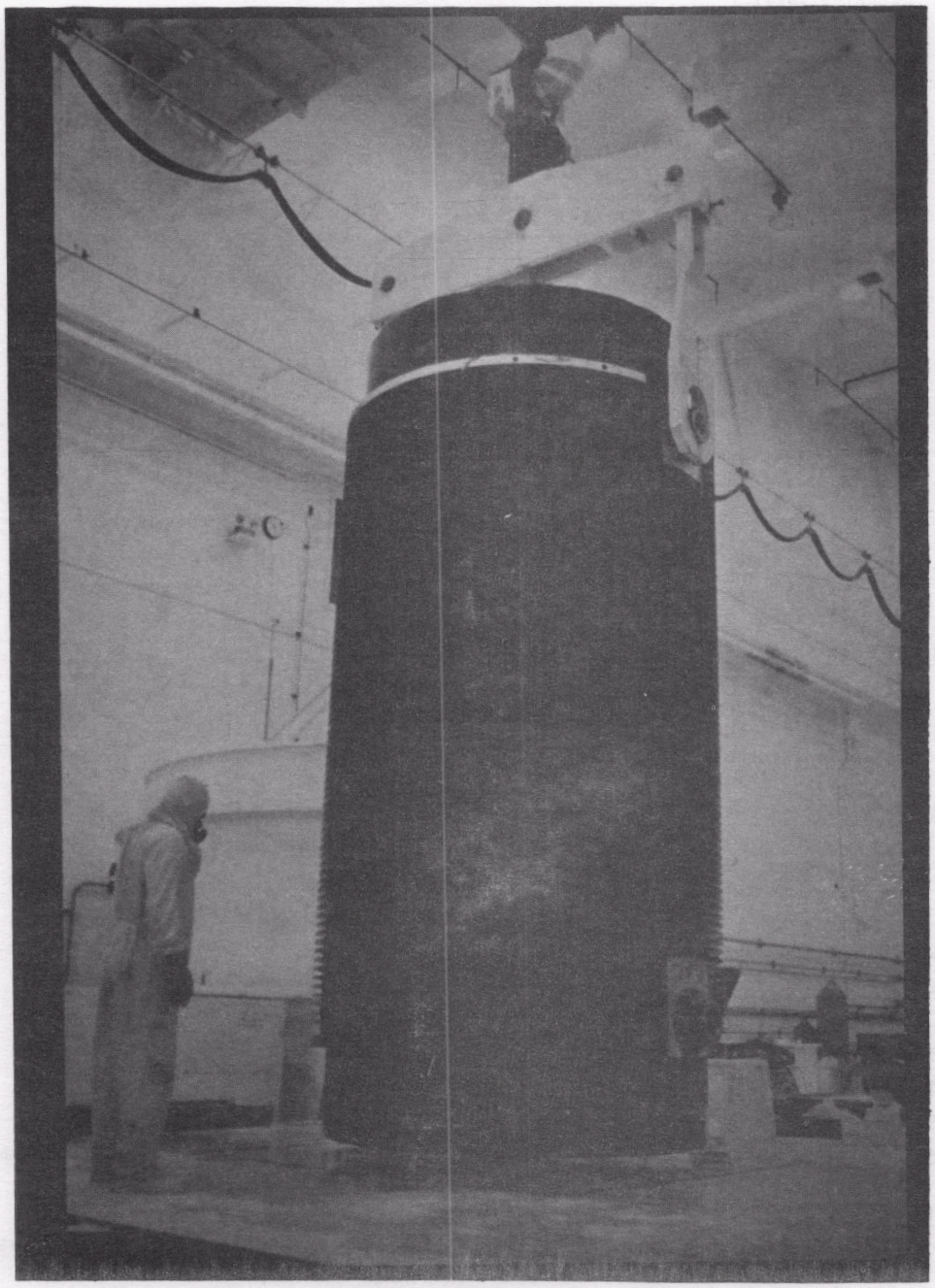

PHOTOGRAPH OF CASTOR V/21 PWR SPENT FUEL STORAGE CASK

TN-24P

(1) Type	Storage/Transport
(2) Manufacturer/Vendor	Transnuclear Inc.
(3) Capacity (assys)	
(a) Intact SF	24
(b) Consolidated Fuel Rods	48
(4) Weight (tons)	
(a) Loaded	100
(b) Empty	82.3
(5) Thermal	
(a) Design Heat Rejection (kW)	20.6 (intact-vertical) 20.5 (intact-horizontal)
(b) Peak Clad Temperature (^{o}C)	221 (intact-vertical) 215 (intact-horizontal)
(6) Shape	Cylindrical
(7) Dimensions	
(a) Overall Length (in)	199.3
(b) Overall Diameter (in)	89.8
(c) Cavity Length (in)	163.4
(d) Cavity Diameter (in)	57.3
(e) Wall Thickness (in)	16.25
(f) Cooling Fin Length (in)	-
(g) Lid Thickness (in)	15.4 (24.9 w/protective cover)
(h) Bottom Thickness (in)	11.0
(i) Basket Length (in)	162.2
(j) Basket Diameter (in)	N/A
(k) Thickness of Basket Spacers	0.4
(8) Neutron Shield	
(a) No. Rods	N/A
(b) Rod Diameter (in)	N/A
(c) Side Thickness (in)	4.2
(d) Lid Thickness (in)	4.2
(e) Bottom Thickness (in)	None
(9) Materials of Construction	
(a) Cask Body	Forged Steel
(b) Basket	Al/B
(c) Neutron Shield	Resin (sides & bottom); granular polypropylene (lid)
(10) No. Cooling Fins	44
(11) Cavity Atmosphere	He
(12) Cavity Pressure (psia)	N/A
(13) Outside Surface Dose (mR/hr)	100
(14) Maximum Leak Rate (l/s)	N/A

(15) Licensing Status TSAR submitted to NRC.

(16) Comments The cask is in existence at INEL and has been successfully tested there using Surry spent fuel.

References

(1) Electric Power Research Institute, The TN-24P PWR Spent-Fuel Storage Cask: Testing and Analysis, EPRI NP-5128, April 1987

N/A means not available.

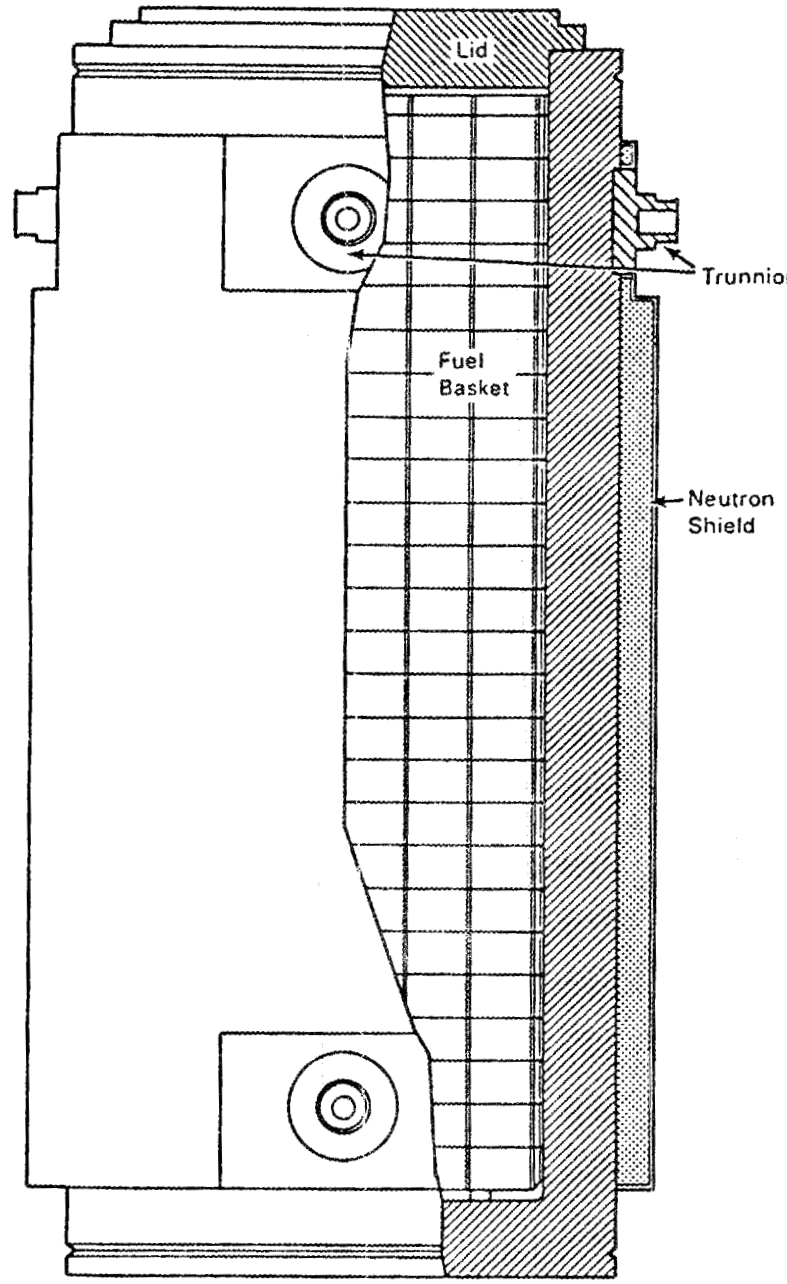

TN-24P PWR SPENT FUEL STORAGE CASK

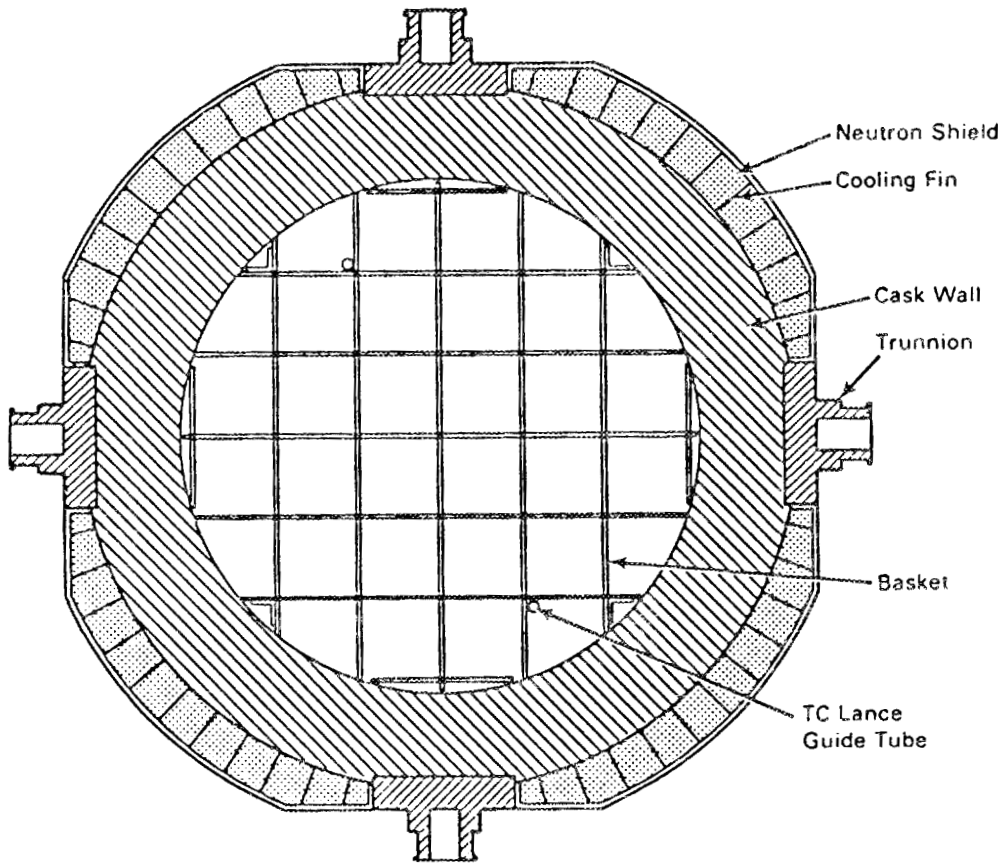

TN-24P CASK CROSS SECTION

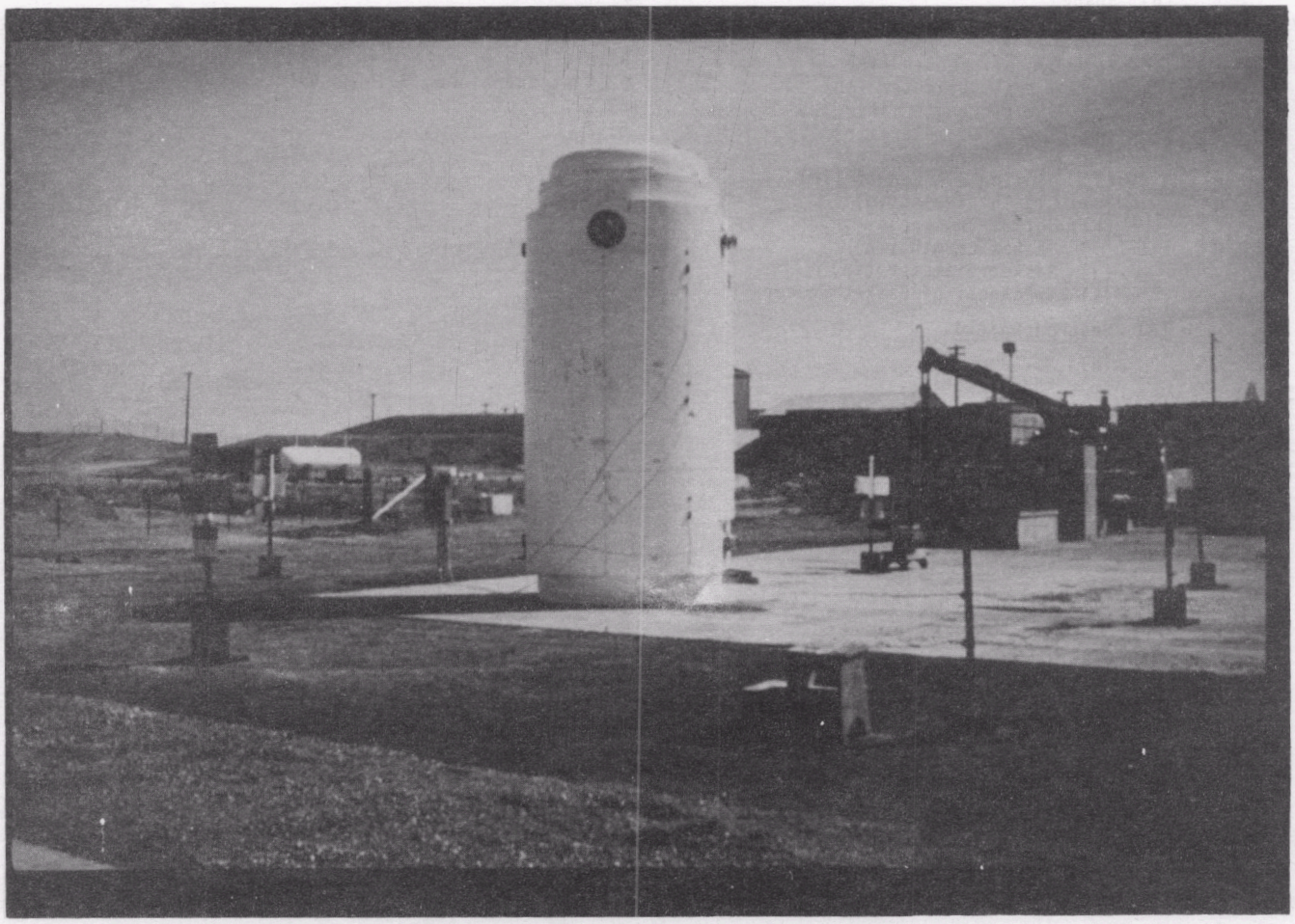

PHOTOGRAPH OF TN-24P PWR SPENT FUEL STORAGE CASK

(1) Type	Storage
(2) Manufacturer/Vendor	Transnuclear Inc.
(3) Capacity (assys)	
(a) Intact SF	24 PWR, 52 BWR
(b) Consolidated Fuel Rods	48 PWR, 104 BWR
(4) Weight (tons)	
(a) Loaded	100
(b) Empty	77
(5) Thermal	
(a) Design Heat Rejection (kW)	24
(b) Peak Clad Temperature (^{o}C)	375
(6) Shape	Cylindrical
(7) Dimensions	
(a) Overall Length (in)	186.8 (198.5 w/protective cover)
(b) Overall Diameter (in)	92.4 at trunnions; 88.5 at outer shell
(c) Cavity Length (in)	163.2
(d) Cavity Diameter (in)	51.2
(e) Wall Thickness (in)	9.5
(f) Cooling Fin Length (in)	-
(g) Lid Thickness (in)	10.5
(h) Bottom Thickness (in)	10.25
(i) Basket Length (in)	162
(j) Basket Diameter (in)	57
(k) Thickness of Basket Spacers (in)	0.4
(8) Neutron Shield	
(a) No. Rods	None
(b) Rod Diameter (in)	None
(c) Side Thickness (in)	5.38
(d) Lid Thickness (in)	2.75
(e) Bottom Thickness (in)	2.75 (horizontal storage)
(9) Materials of Construction	
(a) Cask Body	SA350, Gr. LFI
(b) Basket	Boron SS w/copper plate
(c) Neutron Shield	Polyester Resin
(10) No. Cooling Fins	None
(11) Cavity Atmosphere	Nitrogen or He
(12) Cavity Pressure (psia)	33.9 (initial)
(13) Outside Surface Dose (mR/hr)	60
(14) Maximum Leak Rate (atm-cc/sec)	6.5×10^{-7}

(15) Licensing Status Topical Report under review.

References

(1) Communication C. Pennington (Transnuclear) to E. Johnson (JAI), September 1, 1987

TN-REG/BRP

(1) Type — Storage/Transport

(2) Manufacturer/Vendor — Transnuclear Inc.

(3) Capacity (assys)

(a) Intact SF — 40 PWR (R.E. Ginna); 85 BWR (Big Rock Point)

(4) Weight (tons)

	R.E. Ginna Fuel	Big Rock Point Fuel
(a) Loaded	102.5	97.5
(b) Empty	77.1	77.7

(5) Thermal

(a) Design Heat Rejection (kW)	5 (intact)
(b) Peak Clad Temperature (^{o}C)	375 (intact)

(6) Shape — Cylindrical

(7) Dimensions

	R. E. Ginna Fuel	Big Rock Point Fuel
(a) Overall Length (in)	180	190.5
(b) Overall Diameter (in)	90.25	83.25
(c) Cavity Length (in)	163.25	171
(d) Cavity Diameter (in)	71.75	64
(e) Wall Thickness (in)	9.25	9.62
(f) Lid Thickness (in)	8.5	9.75
(g) Bottom Thickness (in)	8.25	9.75
(h) Basket Length (in)	N/A	N/A
(i) Basket Diameter (in)	N/A	N/A
(k) Thickness of Basket Spacers	N/A	N/A

(8) Neutron Shield — None

(9) Materials of Construction

(a) Cask Body	Forged Steel
(b) Basket	Boron SS
(c) Neutron Shield	-

(10) No. Cooling Fins — None

(11) Cavity Atmosphere — Inert

(12) Cavity Pressure (psia) — 200 max.

(13) Outside Surface Dose (mR/hr) — 200 max.

(14) Maximum Leak Rate (l/s) — N/A

(15) Licensing Status Currently under NRC review.

(16) Comments Two of these casks currently exist; one for R.E. Ginna fuel, and one for Big Rock Point fuel. They are awaiting approval from NRC prior to use for transporting spent fuel from West Valley, NY to INEL at Idaho Falls, ID.

This is a modified version of the TN-24 cask.

References

(1) F. J. Williams, Jr. and K. Goldmann, Transport/Storage of NFS Fuel in TN-BRP and TN-REG Casks, Proceedings of the Third International Spent Fuel Storage Technology Symposium/Workshop, Seattle, WA, April 1986

(2) B. R. Teer et al, Transportable Storage Casks for NFS Spent Fuel, INMM Spent Fuel Storage Seminar IV, Washington, D.C., January 1987

N/A means not available.

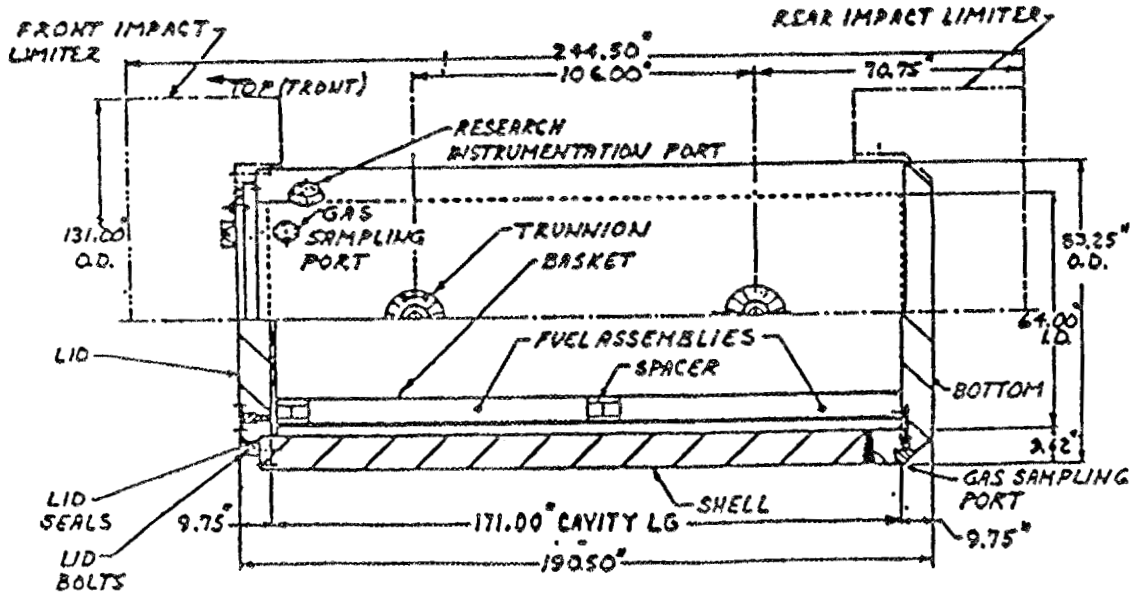

LONGITUDINAL SECTION

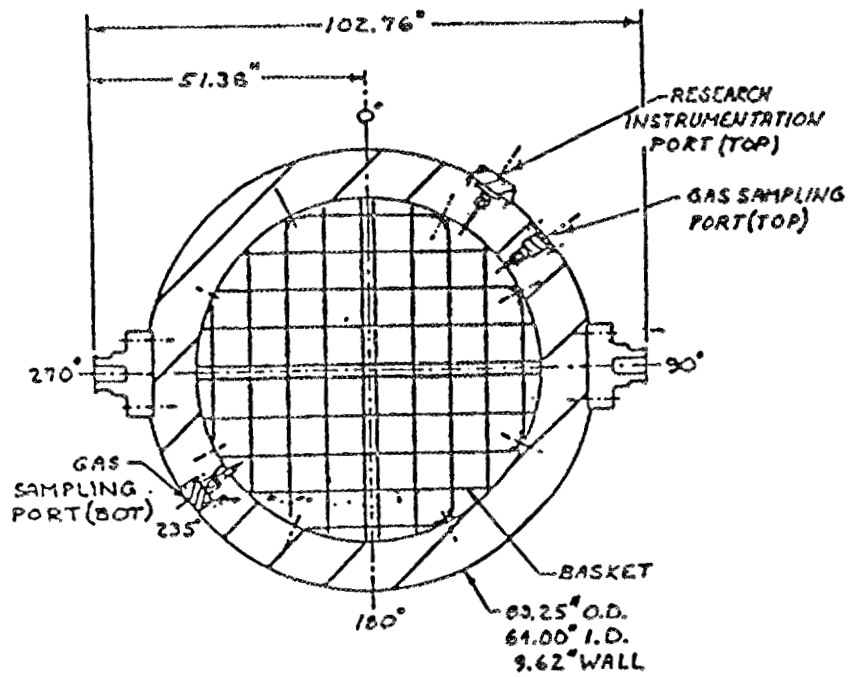

CROSS SECTION

TN-BRP TRANSPORT/STORAGE CASK

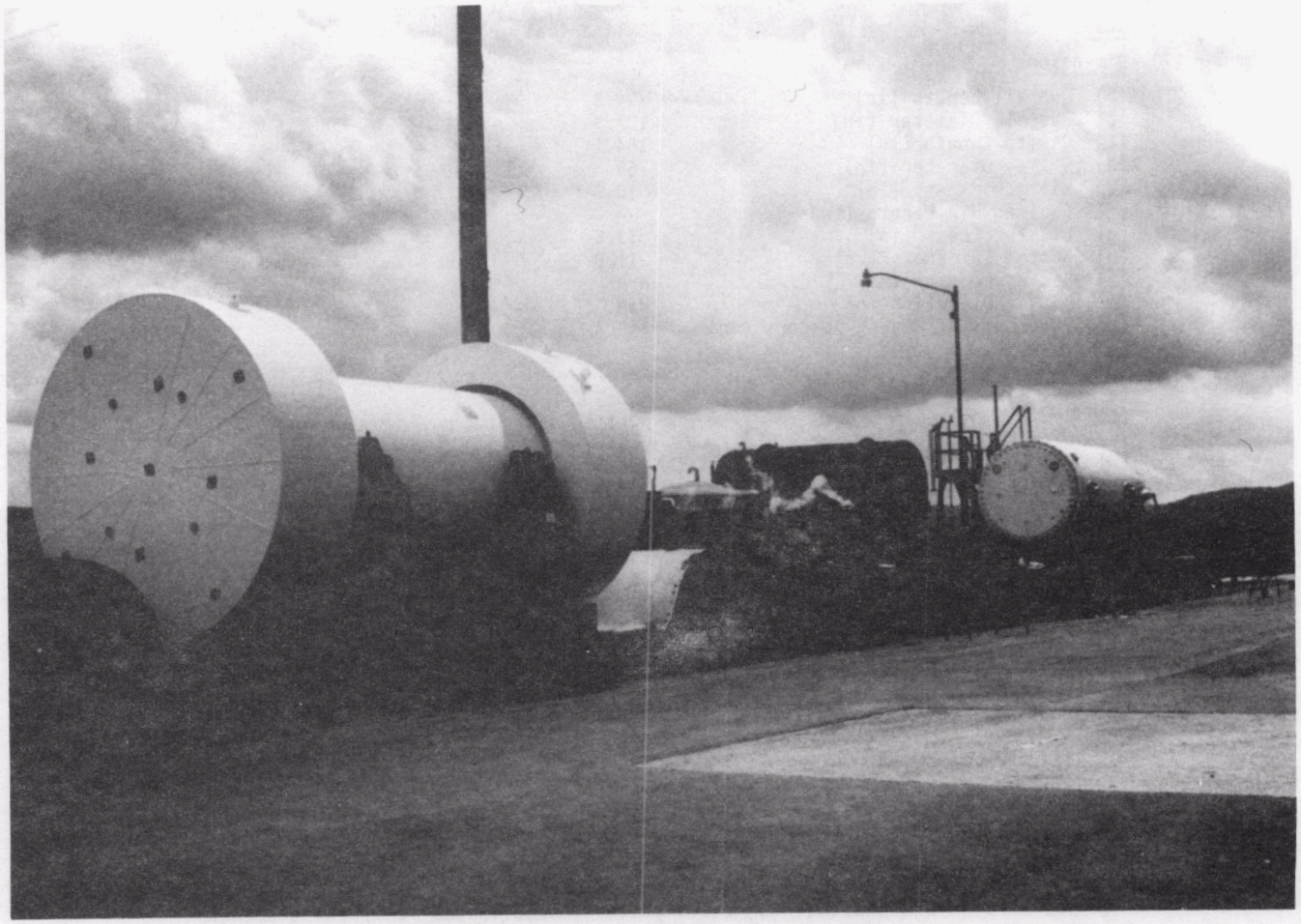

PHOTOGRAPH OF TN-BRP AND TN-REG TRANSPORT/STORAGE CASKS

MC-10

(1) Type	Storage
(2) Manufacturer/Vendor	Westinghouse
(3) Capacity (assys)	
(a) Intact SF	24 PWR, 49 BWR
(b) Consolidated Fuel Rods	(N/A; prototype only)
(4) Weight (tons)	
(a) Loaded	119.8
(b) Empty	102.8
(5) Thermal	
(a) Design Heat Rejection (kW)	13.5 (intact)
(b) Peak Clad Temperature (^{o}C)	336 (intact)
(6) Shape	Cylindrical
(7) Dimensions	
(a) Overall Length (in)	194.8
(b) Overall Diameter (in)	107.9
(c) Cavity Length (in)	164.1
(d) Cavity Diameter (in)	68
(e) Wall Thickness (in)	10.0
(f) Cooling Fin Length (in)	-
(g) Lid Thickness (in)	13.5
(h) Bottom Thickness (in)	11.0
(i) Basket Length (in)	N/A
(j) Basket Diameter (in)	N/A
(k) Thickness of Basket Spacers (in)	0.4
(8) Neutron Shield	
(a) No. Rods	None
(b) Rod Diameter (in)	None
(c) Side Thickness (in)	3.0
(d) Lid Thickness (in)	2.5
(e) Bottom Thickness (in)	2.5
(9) Materials of Construction	
(a) Cask Body	Low Alloy/Forged Steel
(b) Basket	SS Grid/SS Storage Cell/ Boral Plates
(c) Neutron Shield	BISCO NS-3
(10) No. Cooling Fins	24
(11) Cavity Atmosphere	He
(12) Cavity Pressure (psia)	35
(13) Outside Surface Dose (mR/hr)	100 max.
(14) Maximum Leak Rate (l/s)	10^{-10}

(15) Licensing Status TSAR submitted to NRC. License approved September 1987.

(16) Comments One cask is in existence at INEL and has been successfully tested there using Surry spent fuel. The major differences between this prototype and the licensed version are the exterior cooling fins (consolidated fuel) and aluminum basket.

References

(1) Electric Power Research Institute, The MC-10 PWR Spent Fuel Storage Cask: Testing and Analyses, EPRI NP-5268, July 1987

(2) Letter P. I. Fuhrman (W) to E. R. Johnson (JAI), February 4, 1988.

N/A means not available.

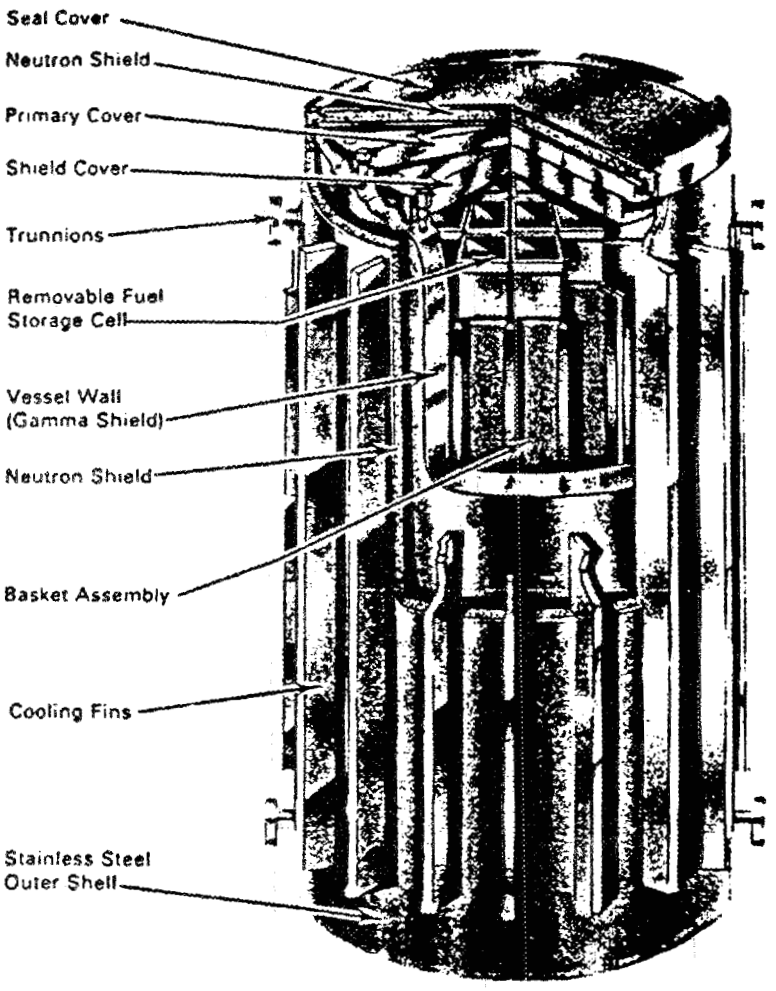

MC-10 SPENT FUEL STORAGE CASK

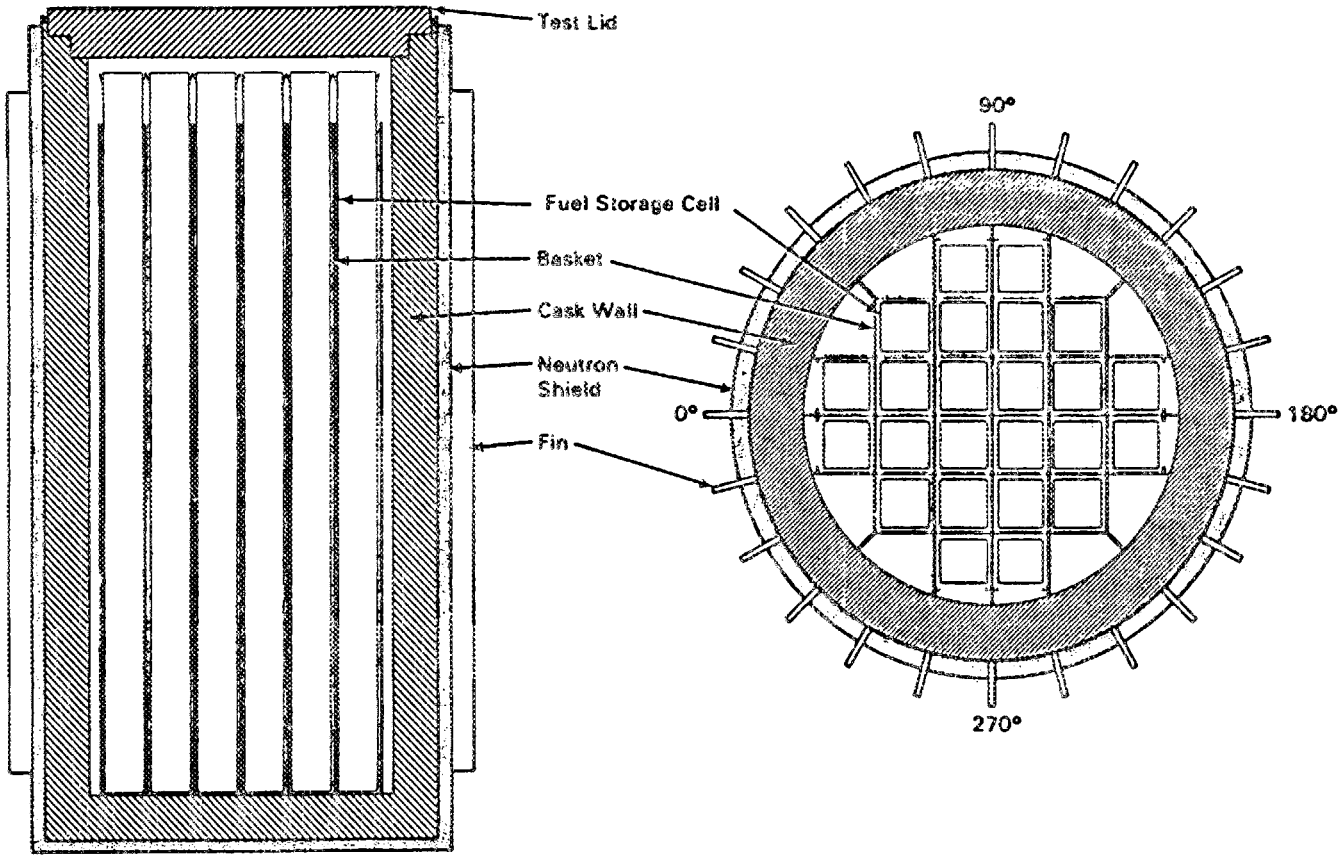

MC-10 CONTAINMENT VESSEL AND CROSS SECTION

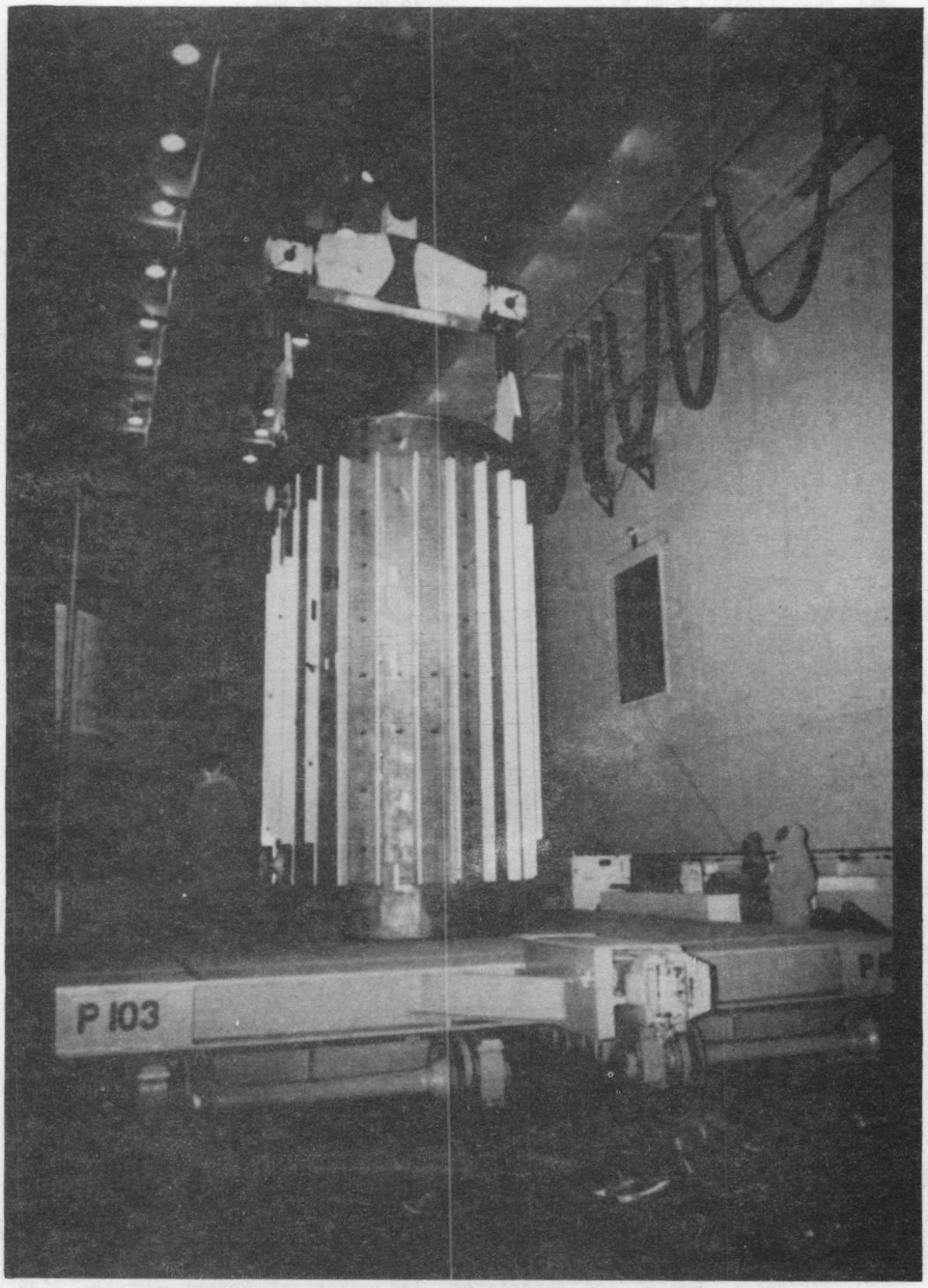

PHOTOGRAPH OF MC-10 SPENT FUEL STORAGE CASK

REA-2023

(1)	Type	Storage
(2)	Manufacturer/Vendor	Mitsubishi Heavy Industries
(3)	Capacity (assys)	
	(a) Intact SF	24 PWR; 52 BWR
	(b) Consolidated Fuel Rods	48 PWR; 104 BWR
(4)	Weight (tons)	
	(a) Loaded	98 (w/intact BWR assemblies)
	(b) Empty	84
(5)	Thermal	
	(a) Design Heat Rejection (kW)	44.6 (intact BWR) 41.6 (consolidated BWR)
	(b) Peak Clad Temperature (^{o}C)	304 (intact BWR) 324 (consolidated BWR)
(6)	Shape	Cylindrical
(7)	Dimensions	

		BWR	PWR
(a)	Overall Length (in)	192.6	182
(b)	Overall Diameter (in)	87.6	93
(c)	Cavity Length (in)	177.2	166.7
(d)	Cavity Diameter (in)	61	66
(e)	Wall Thickness (in)	13.25	13.5
(f)	Cooling Fin Length (in)	-	-
(g)	Lid Thickness (in)	8	8
(h)	Bottom Thickness (in)	7.25	7.25
(i)	Basket Length (in)	N/A	N/A
(j)	Basket Diameter (in)	61	66
(k)	Thickness of Basket Spacers		

(8)	Neutron Shield	
	(a) No. Rods	None
	(b) Rod Diameter (in)	None
	(c) Side Thickness (in)	6 (6.25 w/cover)
	(d) Lid Thickness (in)	None
	(e) Bottom Thickness (in)	None
(9)	Materials of Construction	
	(a) Cask Body	Lead/SS
	(b) Basket	SS w/Boral Inserts
	(c) Neutron Shield	Glycol/Water
(10)	No. Cooling Fins	None
(11)	Cavity Atmosphere	He
(12)	Cavity Pressure (psia)	N/A
(13)	Outside Surface Dose (mR/hr)	20 max.
(14)	Maximum Leak Rate (l/s)	N/A

(15) Licensing Status TSAR submitted to NRC by REA. NRC questions not answered as yet.

(16) Comments One cask was procured by DOE and used in a testing program at GE Morris IL plant. Cask is now at INEL and may be used for lag storage in connection with PCDP.

References

(1) D. R. Rector et al, COBRA-SFS Thermal-Hydraulic Analyses of the CASTOR-IC and REA-2023 BWR Storage Casks Containing Consolidated Spent Fuel, PNL-5802, December 1986

(2) Ridihalgh, Eggers and Associates, Inc., Topical Report for the 2023 Dry Storage Cask for BWR Spent Fuel, April 1983

(3) W. J. Wooley Co., Specifications for the REA-2023, 1983

N/A means not available.

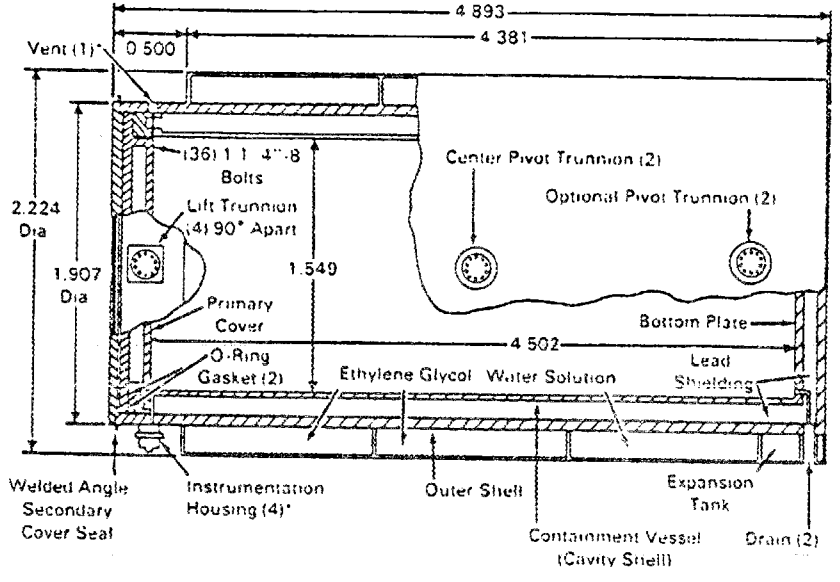

Dimensions are in Meters

*Rotated From True Position

REA 2023 BWR SPENT FUEL STORAGE CASK

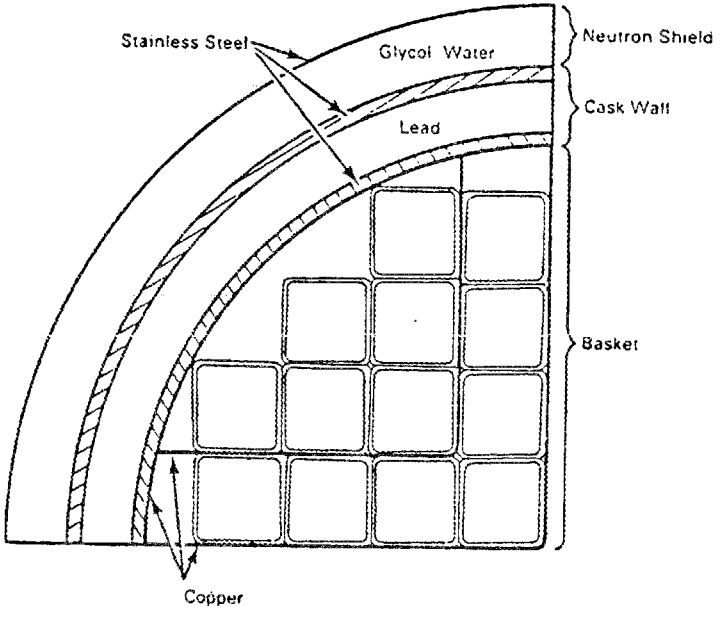

CROSS-SECTION OF REA 2023 CASK AND BWR SPENT FUEL BASKET

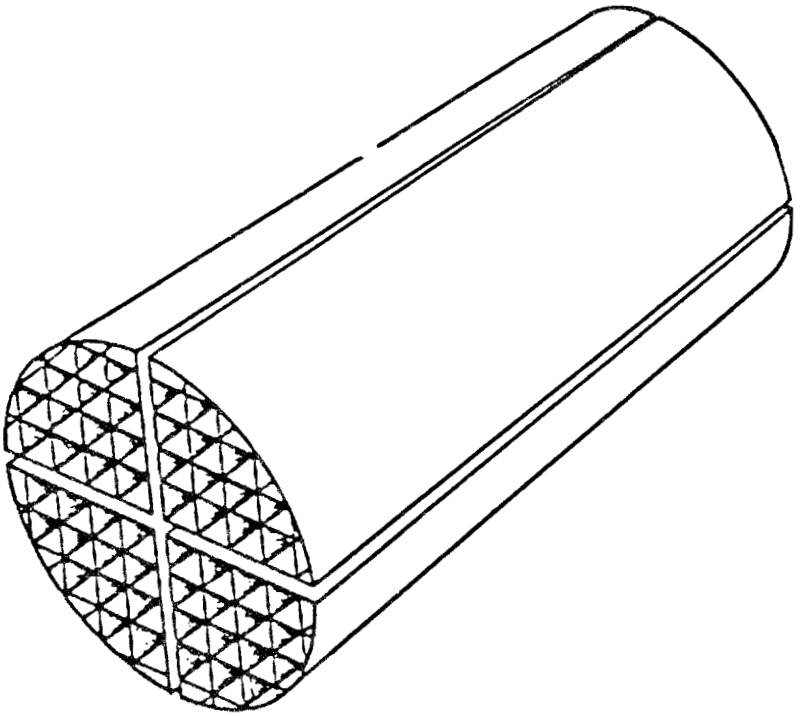

52-ASSEMBLY BWR BASKET FOR REA 2023 CASK

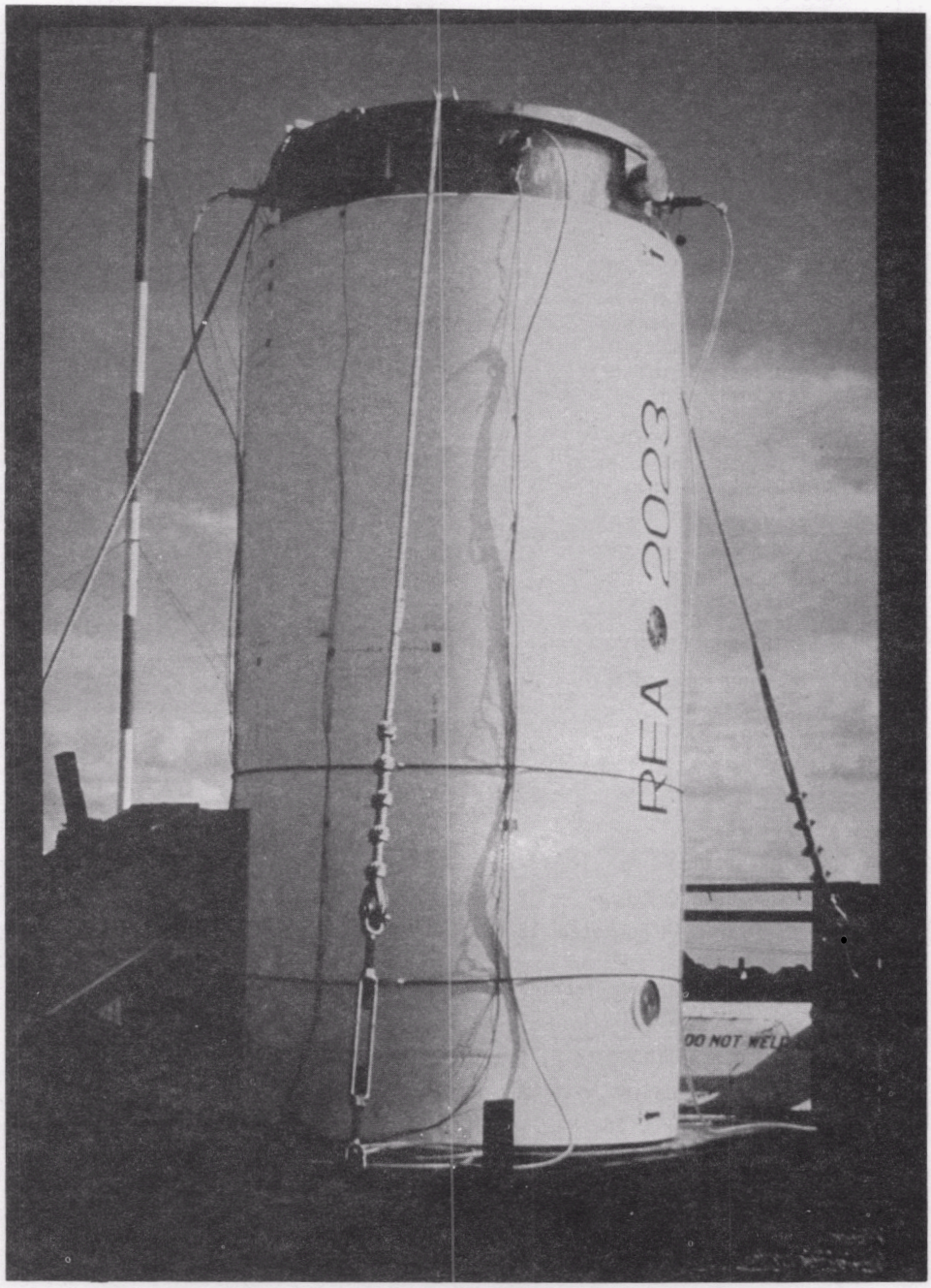

PHOTOGRAPH OF REA 2023 BWR SPENT FUEL STORAGE CASK

NAC S/T

(1) Type	Storage/Transport
(2) Manufacturer/Vendor	Nuclear Assurance Corporation
(3) Capacity (assys)	
(a) Intact SF	26 PWR (31 PWR w/burnup credit)
(b) Consolidated Fuel Rods	56 PWR; 122 BWR
(4) Weight (tons)	
(a) Loaded	100 (intact); 124 (consolidated)
(b) Empty	81
(5) Thermal	
(a) Design Heat Rejection (kW)	26 (16 for burnup credit version)
(b) Peak Clad Temperature (^{o}C)	360 max.
(6) Shape	Cylindrical
(7) Dimensions	
(a) Overall Length (in)	181.3
(b) Overall Diameter (in)	94
(c) Cavity Length (in)	164
(d) Cavity Diameter (in)	64.7
(e) Wall Thickness (in)	15
(f) Lid Thickness (in)	8.5
(g) Bottom Thickness (in)	8.8
(h) Basket Length (in)	155
(i) Basket Diameter (in)	64.5
(8) Neutron Shield	
(a) No. Rods	None
(b) Rod Diameter (in)	None
(c) Side Thickness (in)	7
(d) Lid Thickness (in)	None
(e) Bottom Thickness (in)	None
(9) Materials of Construction	
(a) Cask Body	Lead/SS
(b) Basket	Aluminum
(c) Neutron Shield	BISCO NS4FR
(10) No. Cooling Fins	None
(11) Cavity Atmosphere	He
(12) Cavity Pressure (psia)	30
(13) Outside Surface Dose (mR/hr)	100 max.

(14) Licensing Status TSAR docketed 12/84. License approval is expected in early 1988.

(15) Comments One cask has been fabricated by NAC for use at the Surry reactor site.

References

(1) Letter W. J. Lee (NAC) to W. Etz (JAI), July 29, 1987

(2) Personal communication with NAC, August 31, 1987

(3) J. V. Houston, Jr., The NAC S/T Status: An Update, INMM Spent Fuel Storage Seminar III, Washington, D.C., January 1986

(4) Letter W. J. Lee (NAC) to E. R. Johnson (JAI), February 8, 1988.

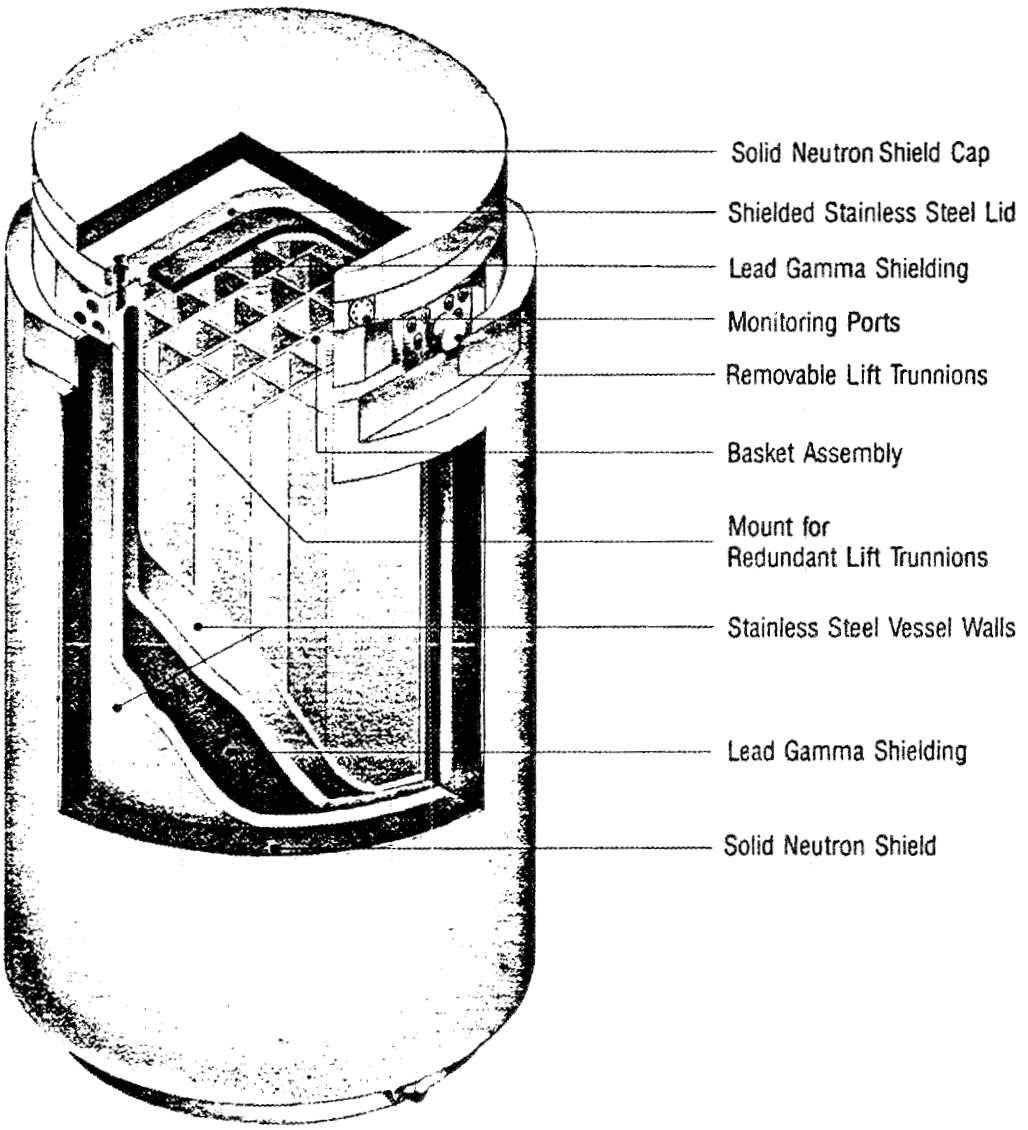
Solid Neutron Shield Cap
Shielded Stainless Steel Lid
Lead Gamma Shielding
Monitoring Ports
Removable Lift Trunnions
Basket Assembly
Mount for
Redundant Lift Trunnions
Stainless Steel Vessel Walls
Lead Gamma Shielding
Solid Neutron Shield

NAC S/T CASK

C-E DRY CAP

(1) Type	Storage/Transport
(2) Manufacturer/Vendor	Combustion Engineering/Sumitomo
(3) Capacity (assys)	
(a) Intact SF	24 PWR; 60 BWR
(b) Consolidated Fuel Rods	48 PWR; 100 BWR
(4) Weight (tons)	
(a) Loaded	111 (PWR-intact); 113 (BWR-intact) 125 (consolidated)
(b) Empty	93.3
(5) Thermal	
(a) Design Heat Rejection (kW)	24 (est.)
(b) Peak Clad Temperature (^{o}C)	355 max.
(6) Shape	Cylindrical
(7) Dimensions	
(a) Overall Length (in)	196.9
(b) Overall Diameter (in)	90
(c) Cavity Length (in)	178.7
(d) Cavity Diameter (in)	64.6
(e) Wall Thickness (in)	12.7
(f) Lid Thickness (in)	9.5
(g) Bottom Thickness (in)	8.7
(h) Basket Length (in)	N/A
(i) Basket Diameter (in)	N/A
(j) Thickness of Basket Spacers (in)	N/A
(8) Neutron Shield	
(a) No. Rods	None
(b) Rod Diameter (in)	None
(c) Side Thickness (in)	3.2
(d) Lid Thickness (in)	None
(e) Bottom Thickness (in)	None
(9) Materials of Construction	
(a) Cask Body	Steel
(b) Basket	SS
(c) Neutron Shield	BISCO
(10) No. Cooling Fins	None
(11) Cavity Atmosphere	He
(12) Cavity Pressure (psia)	N/A
(13) Outside Surface Dose (mR/hr)	50 max. (PWR); 80 max. (BWR)
(14) Maximum Leak Rate (l/s)	N/A
(15) Licensing Status	TSAR submitted to NRC. NRC license expected in 1988.
(16) Comments	None available at present, but can be ordered from Combustion Engineering.

References

(1) C. K. Anderson and W. J. Burns, The C-E Dry-Cap Spent Fuel Storage/Transport Cask, TIS-8195, Presented at PATRAM-86, Davos Switzerland, June 1986

N/A means not available.

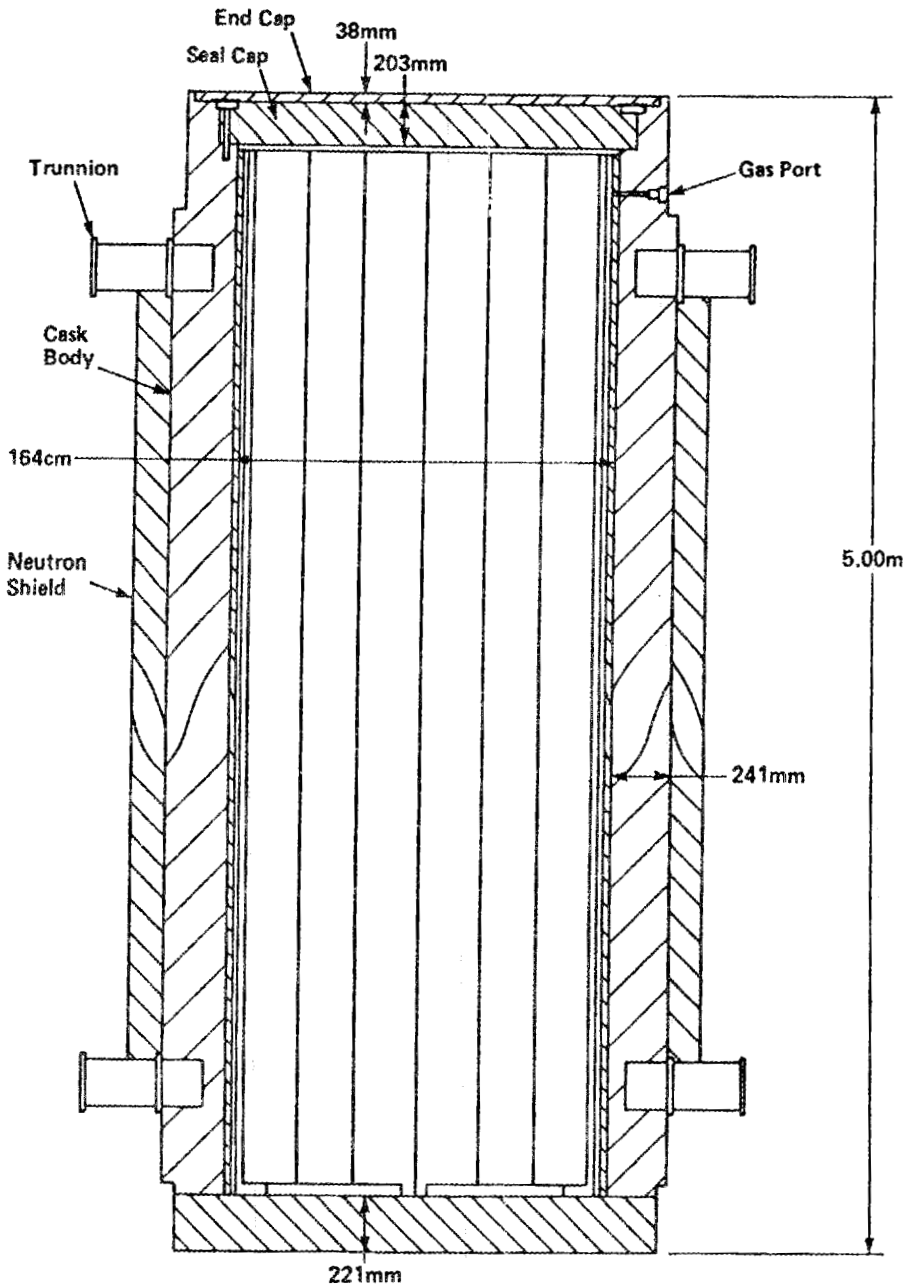

C-E DRY-CAP SPENT FUEL STORAGE CASK

NUPAC CP-9D

(1) Type	Concrete Storage Cask
(2) Manufacturer/Vendor	Nuclear Packaging Inc.
(3) Capacity (assys)	
(a) Intact SF	9 PWR
(b) Consolidated Fuel Rods	18 PWR
(4) Weight (tons)	
(a) Loaded	88
(b) Empty	80
(5) Thermal	
(a) Design Heat Rejection (kW)	5.4
(b) Peak Clad Temperature (^{o}C)	290
(6) Shape	Cylindrical
(7) Dimensions	
(a) Overall Length (in)	214.5
(b) Overall Diameter (in)	102
(c) Cavity Length (in)	173
(d) Cavity Diameter (in)	35 (33 square)
(e) Wall Thickness (in)	34.5
(f) Lid Thickness (in)	15.8
(g) Bottom Thickness (in)	27
(h) Basket Length (in)	173
(i) Basket Diameter (in)	33
(8) Materials of Construction	
(a) Cask Body	Reinforced Concrete
(b) Basket	Steel
(c) Neutron Shield	Concrete/RX-277
(9) No. Cooling Fins	None
(10) Cavity Atmosphere	Inert
(11) Cavity Pressure (psia)	1 atm.
(12) Outside Surface Dose (mR/hr)	20 max.
(13) Maximum Leak Rate (l/s)	10^{-7}

(14) Licensing Status Topical Report submitted.

(15) Comments This cask must be dry loaded and, therefore, needs a transfer cask and shield collar for its use. It contains shield plugs in the top of each of the basket cavities. This cask may also be unloaded underwater (CP-9W) and thus needs no transfer cask, shield collar, or shield plugs.

At present this is a design concept only; no casks have been manufactured as yet. However, NUPAC is commercially bidding on the use of these casks to meet utility storage requirements.

A similar cask with a capacity for storing 25 BWR assemblies is being designed.

References

(1) Philip A. Craig, At-Reactor Spent Fuel Storage in Concrete Casks, INMM Spent Fuel Storage Technology Seminar IV, Washington, D.C., January 1987

(2) Topical Safety Analysis Report for the NUPAC CP-9 Concrete Storage Cask, TP-08, Rev. 1, November 1987

(3) Personal communication, Philip A. Craig, NUPAC, January 25, 1988.

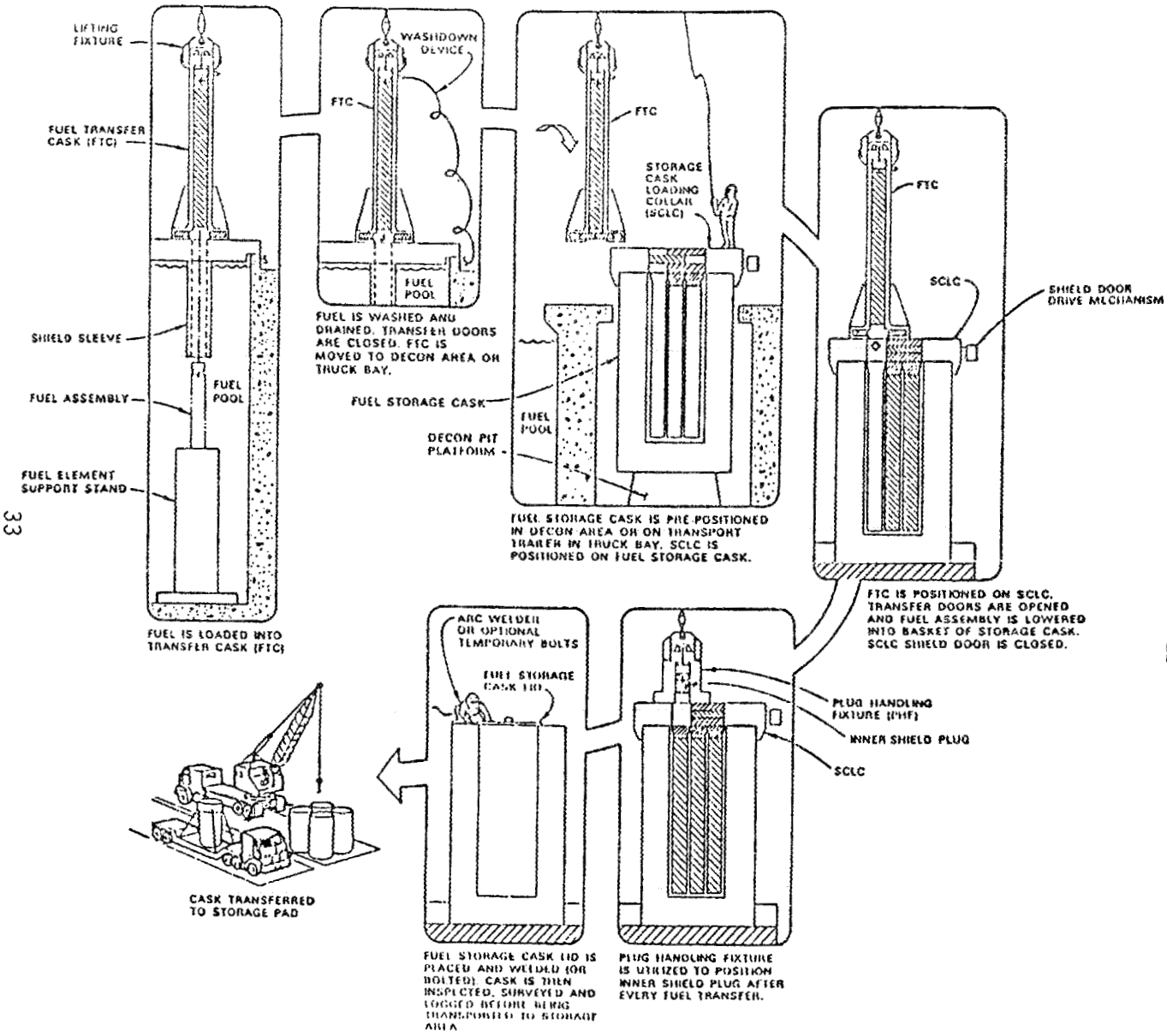

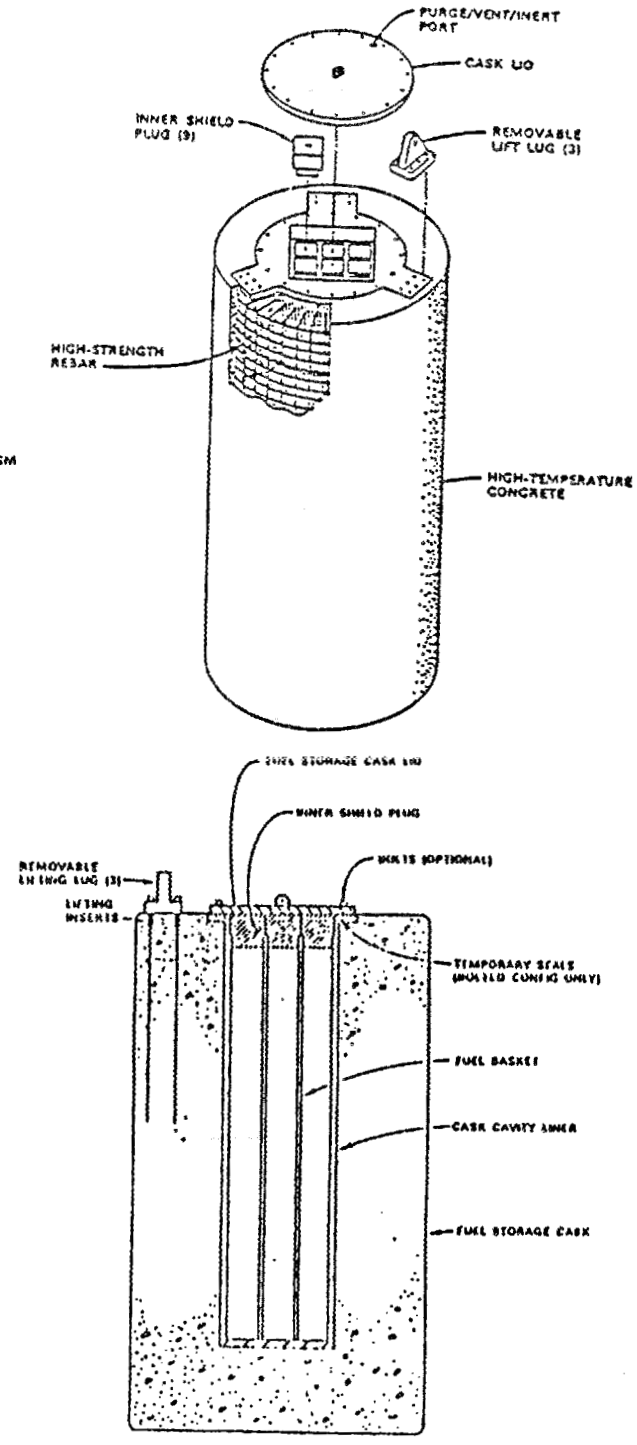

NUPAC CP-9D CONCRETE STORAGE CASK

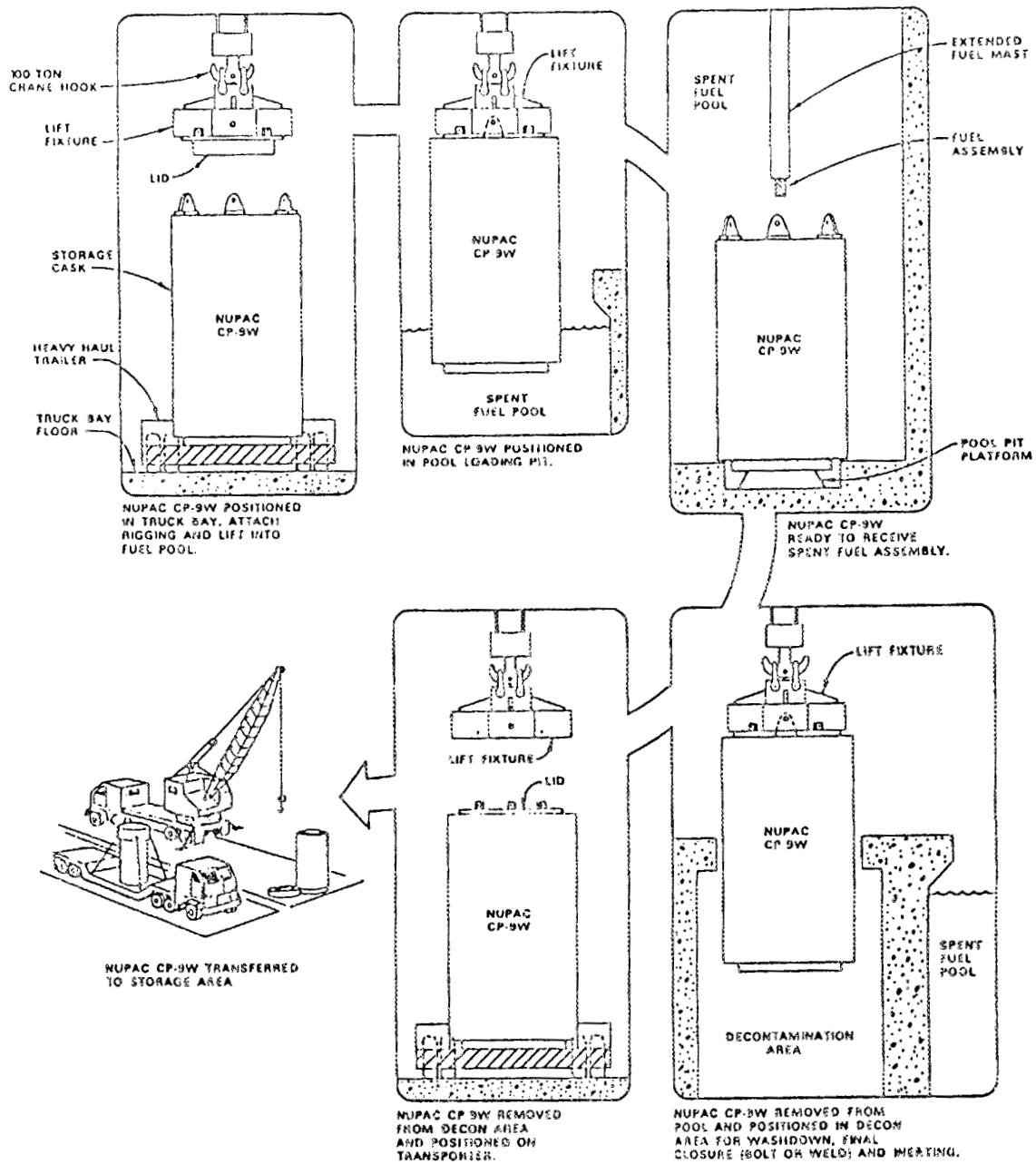

NUPAC CP-9W CONCRETE STORAGE CASK

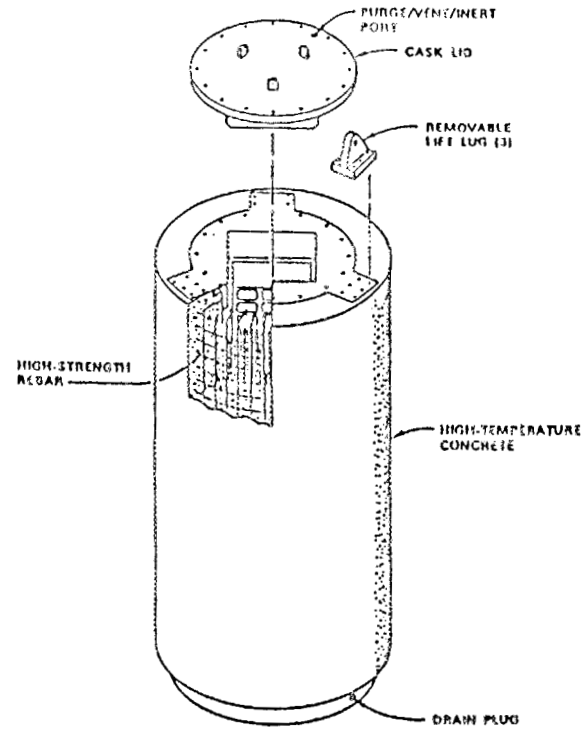

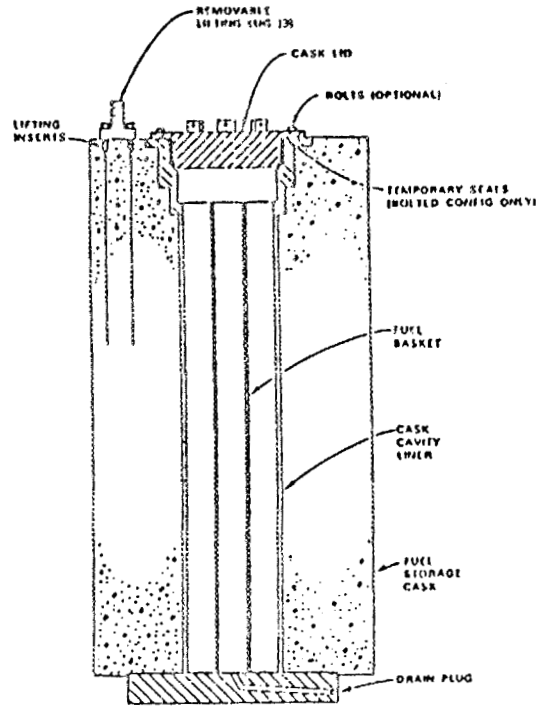

NUHOMS - 0708

(1) Type — Concrete Storage Module

(2) Manufacturer/Vendor — NUTECH

(3) Dry Shielded Canister (DSC)

(a) Capacity (assemblies)	7 PWR (intact)
(b) Weight, Loaded (tons)	11
(c) Operating Temperature (°C)	204 max.
(d) Shape	Cylindrical
(e) Dimensions	
Overall Length (in)	179
Cross Section (in)	37
Cavity Diameter (in)	36
Wall Thickness (in)	0.5
Shield Plug Thickness (in)	N/A
(f) Materials of Construction	
Canister Body	SS
Basket	SS w/Al-B sheet
Shield Plugs	SS/Lead
(g) Cavity Atmosphere	He
(h) Cavity Pressure (psia)	14.7 (40 max.)
(i) Maximum Leak Rate (atm-cm^3/sec)	10^{-6}

(4) Horizontal Storage Module (HSM)

(a) Capacity (DSCs)	1 (8 modules/unit)
(b) Thermal	
Design Heat Rejection (kW)	7
Ambient Temperature (°C)	51.7 max.
Concrete Temperature (°C)	93 max.
(c) HSM Dimensions	
Length (ft)	19.42
Height (ft)	12.00
Width (ft)	5.58
(d) Materials of Construction	Reinforced Concrete and Structural Steel
(e) Outside Surface Dose (mR/hr)	20 max.

(5) Licensing Status Topical report was approved by NRC during the first quarter of 1986. CP&L site license was approved during the third quarter of 1986, with a site license amendment being approved during the second quarter of 1987.

(6) Comments One facility is currently under construction at the H.B. Robinson plant of Carolina Power and Light Co., the NUHOMS-0708 system was tailored for use at this facility. Another is scheduled to be built by Duke Power Co.; no detailed information is yet available on this installation. According to NUTECH, NUHOMS systems can be built for a variety of canister sizes as follows:

Capacity of DSC (Assys)		Dimensions of DSC (ft)		Dimensions of HSM (ft)		
PWR	BWR	Diameter	Length	Length	Height	Width
1	2	0.33	4.52	19	9.58	3.58
7	14	0.94	4.55	19	12.00	5.58
10	20	1.14	4.56	19	12.67	6.25
12	24	1.22	4.52	19	12.92	6.50
21	42	1.51	4.20	19	13.87	7.46
24	48	1.69	4.57	19	14.46	8.04

A modified IF-300 cask is used to transfer DSCs from the reactor pool to the HSM.

References

(1) Electric Power Research Institute, NUHOMS Spent-Fuel Storage Demonstration: Program Overview, EPRI NP-5174, April 1987

(2) John V. Massey, et al, Design of a Horizontal Concrete Module and a Dry Shielded Canister for Use in an Irradiated Fuel Storage System, NUTECH Inc., undated

(3) John V. Massey, Status of NUHOMS Technology, DOE Spent Fuel Storage Technical Exchange Meeting, May 1987

N/A means not available.

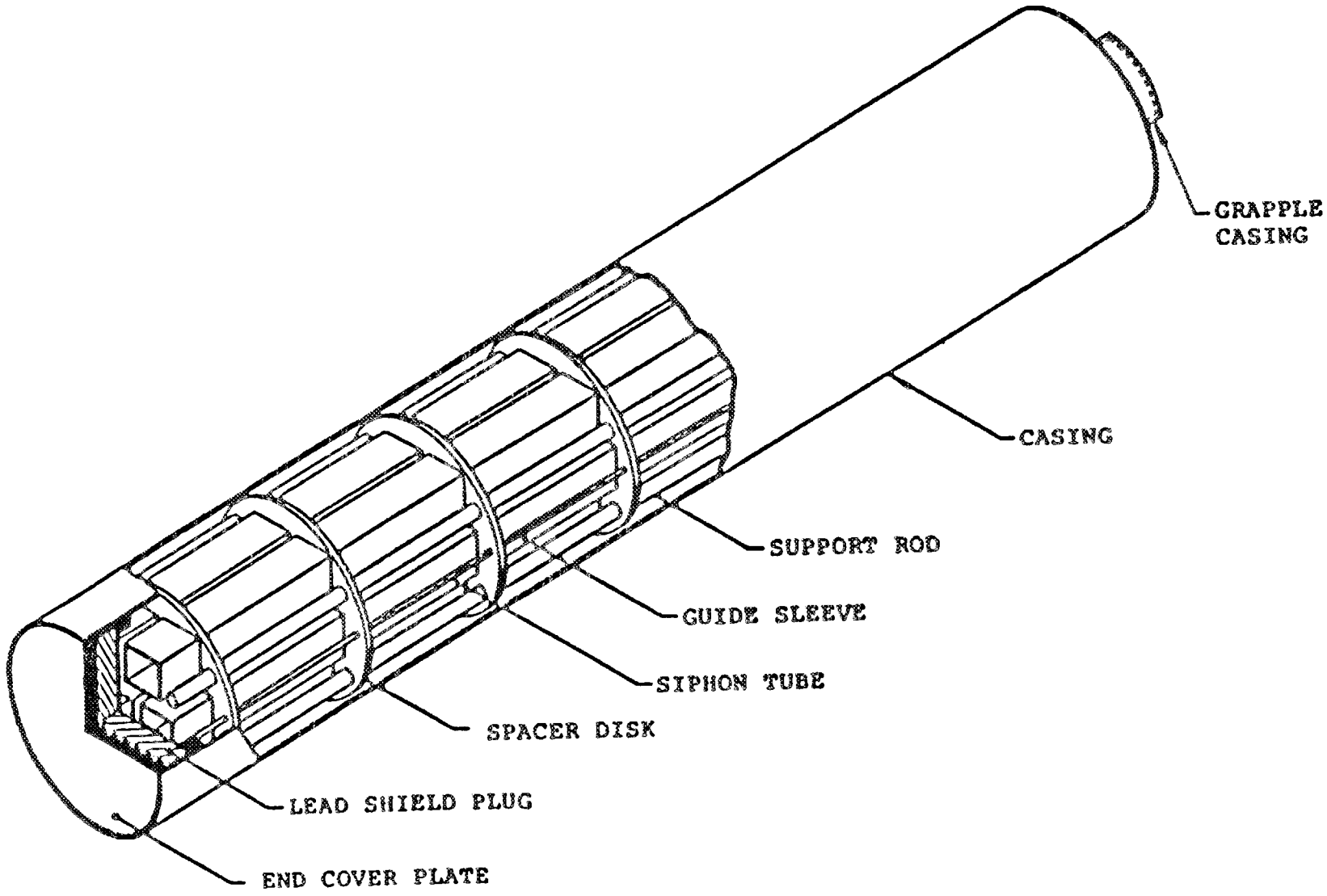

-NUTECH

DRY SHIELDED CANISTER AND INTERNAL BASKET OF THE NUHOMS SYSTEM

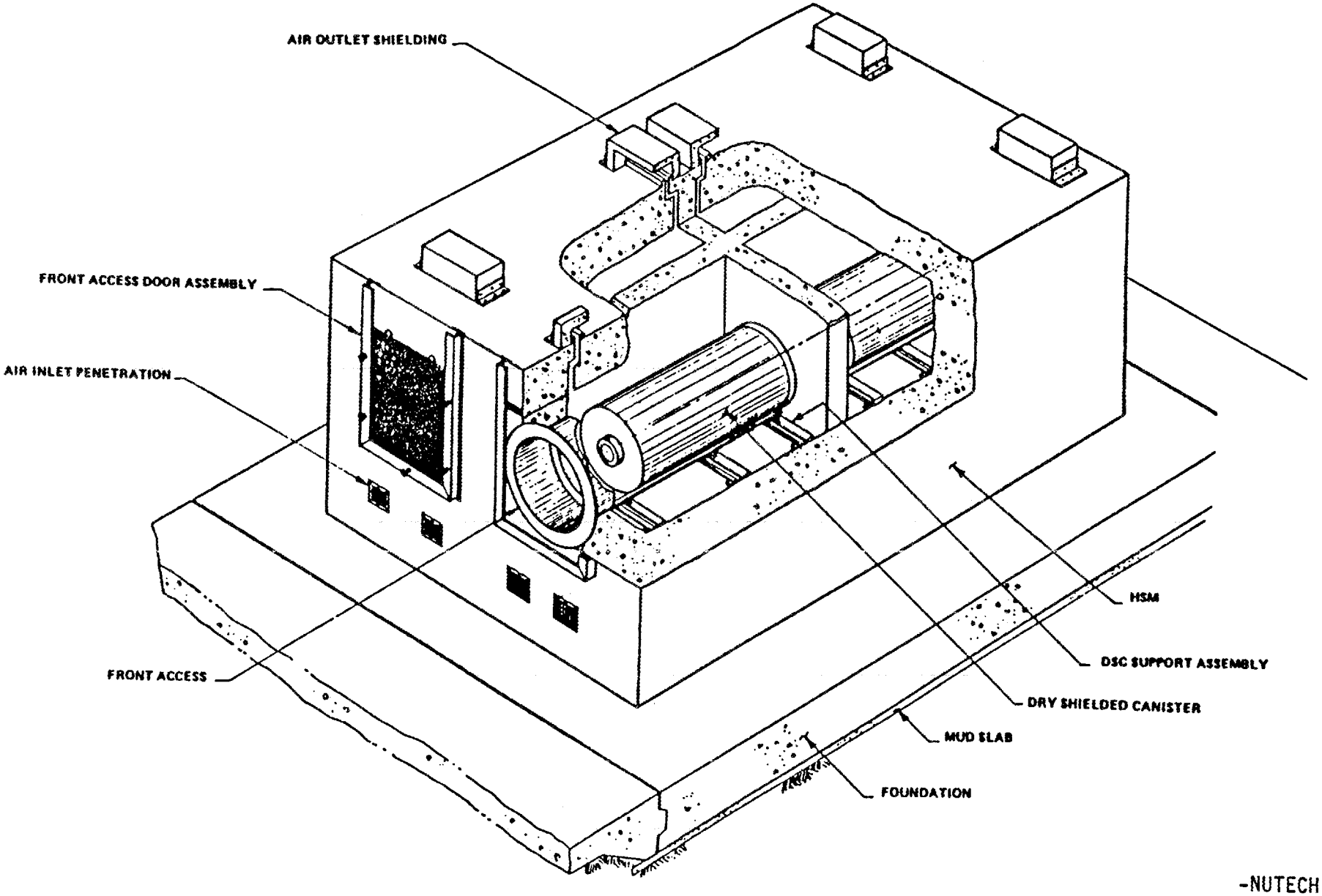

-NUTECH

HORIZONTAL STORAGE MODULE

1 TRUNNION SUPPORT ASSEMBLY
2 X,Y ROLLERS
3 SADDLE ASSEMBLY
4 DRY SHIELDED CANISTER (DSC)
5 HYDRAULIC CONTROL PANEL
6 HYDRAULIC JACKS
7 RAM SUPPORT ASSEMBLY
8 TRAILER BED
9 TRANSFER CASK
10 RAM ASSEMBLY
11 HORIZONTAL STORAGE MODULE (HSM)

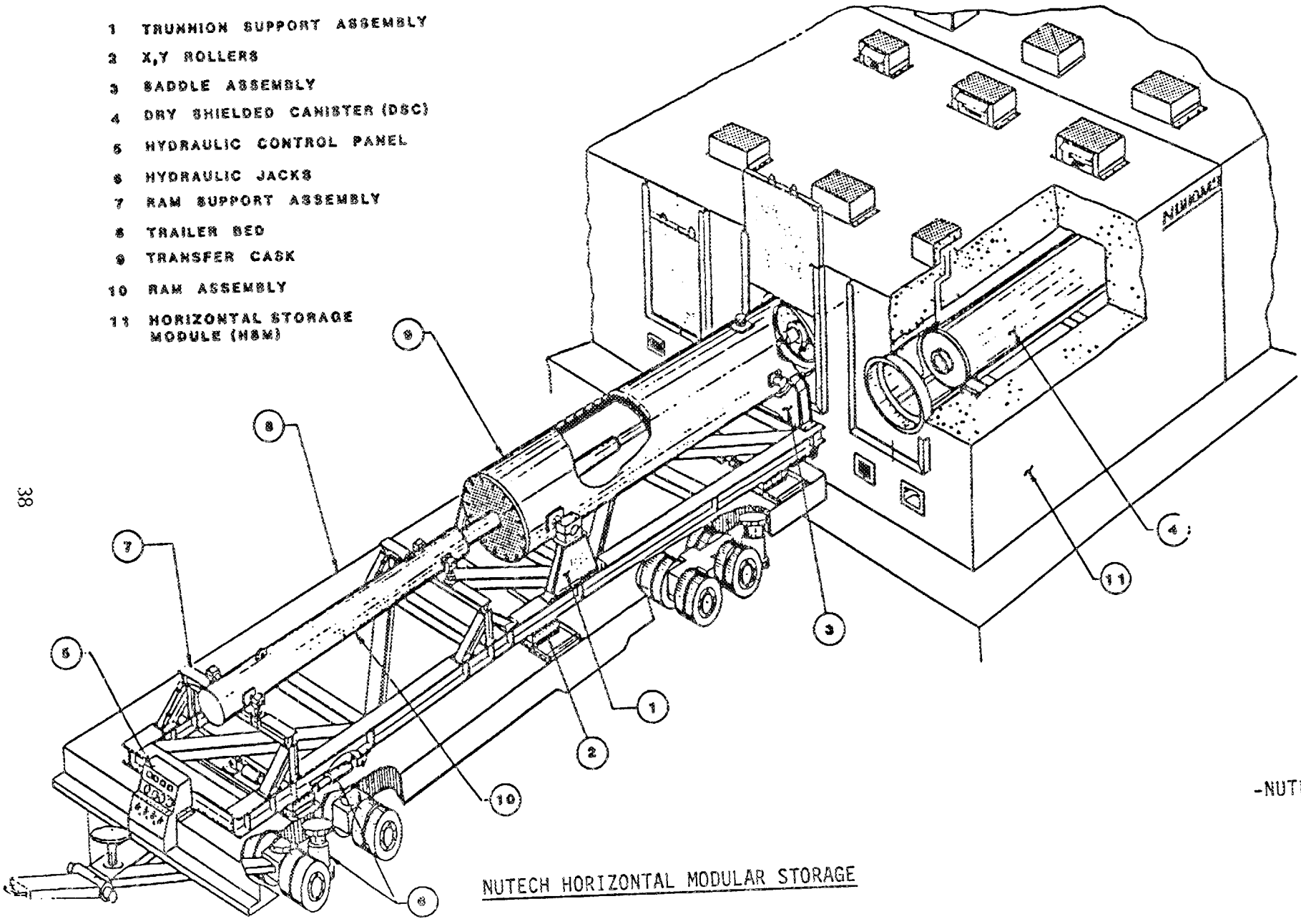

NUTECH HORIZONTAL MODULAR STORAGE

-NUTECH

TN-8

(1) Type	Overweight Truck Shipping Cask
(2) Manufacturer/Vendor	Transnuclear Inc.
(3) Capacity	
(a) Intact SF Assys	3 PWR
(b) Cans Consolidated Fuel Rods	3 PWR
(4) Weight (tons)	
(a) Loaded	39.3
(b) Empty	36.9
(5) Design Heat Rejection (kW)	35.5
(6) Shape	Nearly Cylindrical
(7) Dimensions	
(a) Overall Length (in)	192
(b) Overall Diameter (in)	67.5
(c) Cavity Length (in)	168
(d) Cavity Diameter (in)	Irregular
(e) Lead Shield Thickness (in)	7.3
(f) Neutron Shield Thickness (in)	6.0
(g) Shell(s) Thickness (in)	1.5
(8) Materials of Construction	
(a) Cask Body	Steel/Lead
(b) Neutron Shield	
Sides	Borated Solid Resin
End	None
(c) Basket	SS/B_4C-Cu Plates
(9) Cooling Fins	Radial - Longitudinal (Cu-Ni Plated)
(10) Operating Temperature (^oC)	115
(11) Operating Pressure (psia)	14.7 (125 max.)
(12) Outside Surface Dose (mR/hr)	2 (@ 2m.)
(13) Cavity Atmosphere	Air

(14) Licensing Status Licensed by NRC.

(15) Comments Two casks are available presently in U.S. (TN-8L); and two more are in use in Europe but licensed by NRC for use in U.S. All are available for lease from TNI.

References

(1) U. S. Department of Energy, Technology for Commercial Radioactive Waste Management, Vol. 4, DOE/ET-0028, May 1979

(2) Transnuclear Inc., Commercial Brochure, 2M084

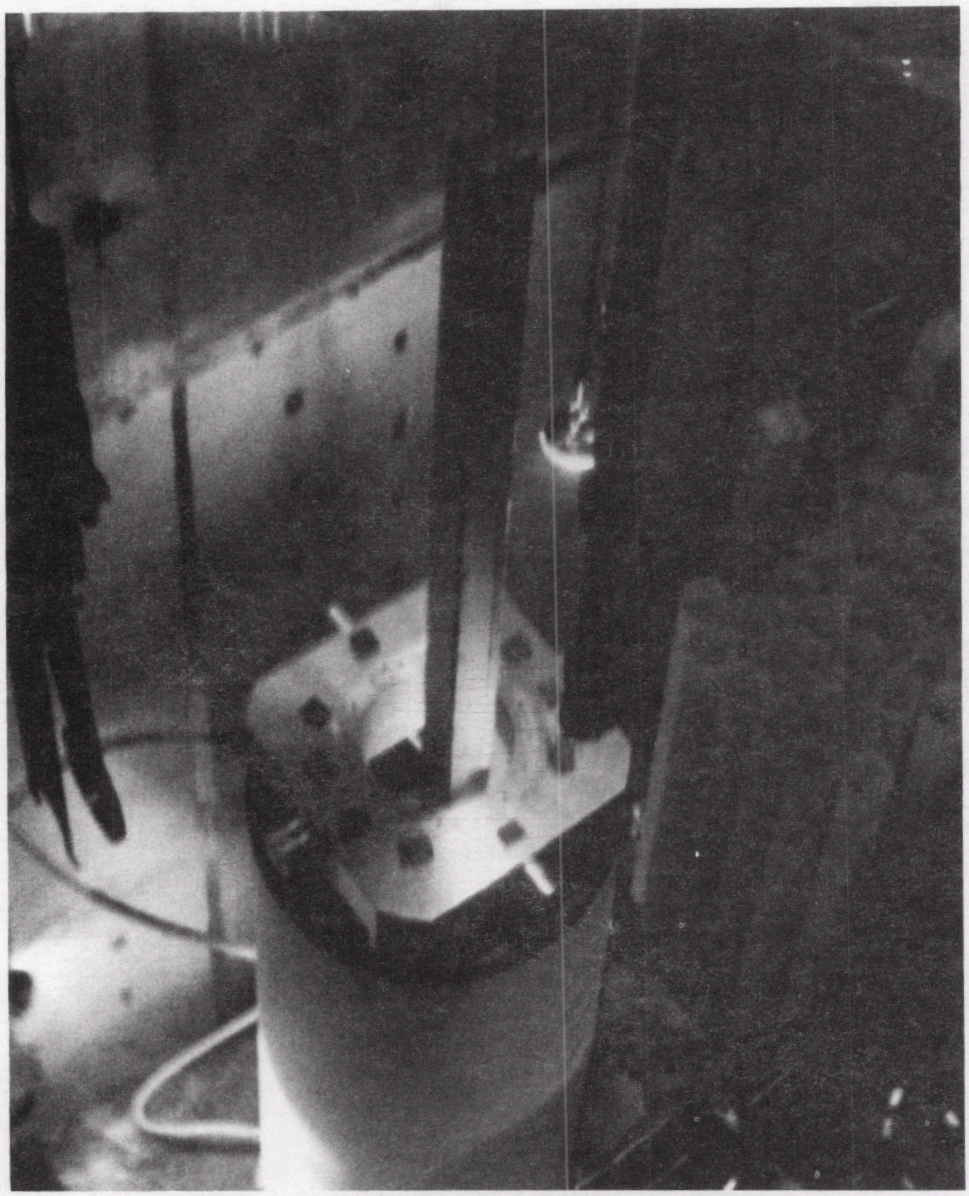

PHOTOGRAPH OF TN-8 SHIPPING CASK

TN-9

(1) Type	Overweight Truck Shipping Cask
(2) Manufacturer/Vendor	Transnuclear Inc.
(3) Capacity	
(a) Intact SF Assys	7 BWR
(b) Cans Consolidated Fuel Rods	7 BWR
(4) Weight (tons)	
(a) Loaded	39.1
(b) Empty	36.8
(5) Design Heat Rejection (kW)	24.5
(6) Shape	Nearly Cylindrical
(7) Dimensions	
(a) Overall Length (in)	200
(b) Overall Diameter (in)	66
(c) Cavity Length (in)	178
(d) Cavity Diameter (in)	Irregular
(e) Lead Shield Thickness (in)	6.9
(f) Neutron Shield Thickness (in)	6.0
(g) Shell(s) Thickness (in)	1.5
(8) Materials of Construction	
(a) Cask Body	Steel/Lead
(b) Neutron Shield	
Sides	Borated Solid Resin
End	None
(c) Basket	SS
(9) Cooling Fins	Radial - Longitudinal (Cu-Ni Plated)
(10) Operating Temperature (^{o}C)	115
(11) Operating Pressure (psia)	14.7 (125 max.)
(12) Outside Surface Dose (mR/hr)	2 (@ 2m.)
(13) Cavity Atmosphere	Air

(14) Licensing Status Licensed by NRC.

(15) Comments Two casks are available presently in U.S.; one is owned by Commonwealth Edison and the other by TNI. Both are available for lease.

References

(1) U. S. Department of Energy, Technology for Commercial Radioactive Waste Management, Vol. 4, DOE/ET-0028, May 1979

(2) Transnuclear Inc., Commercial Brochure, 2M084

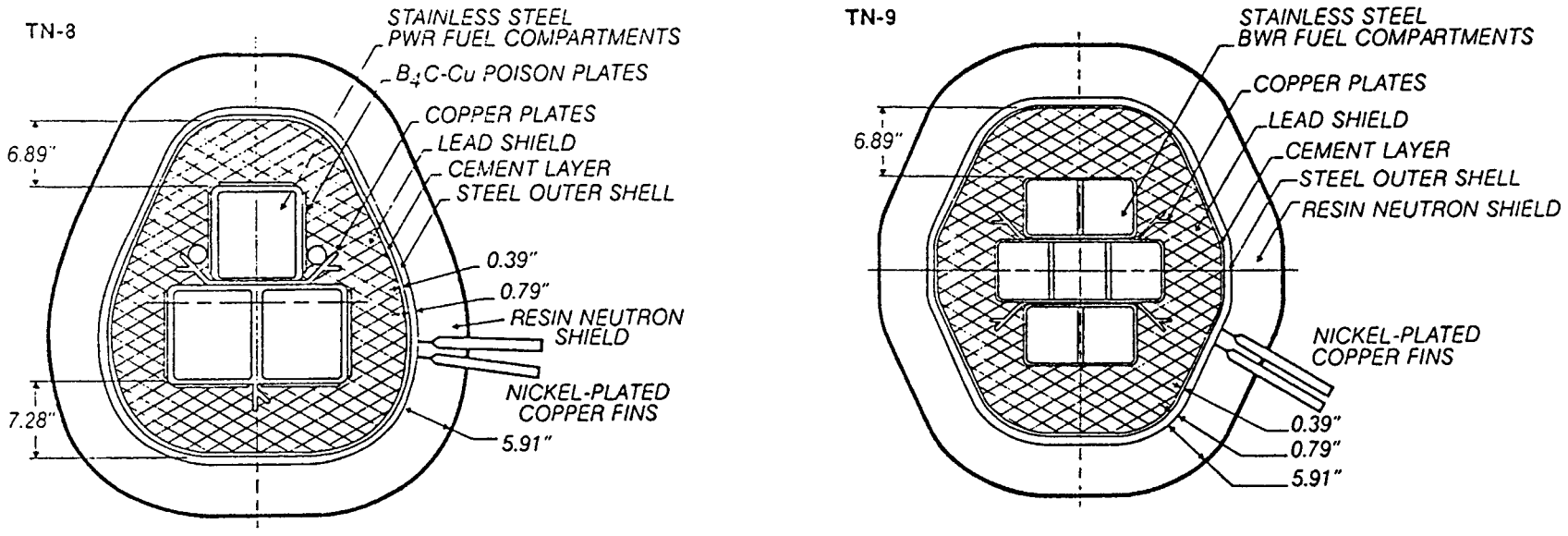

CROSS-SECTIONS OF TN-8 AND TN-9 OVERWEIGHT TRUCK SHIPPING CASKS

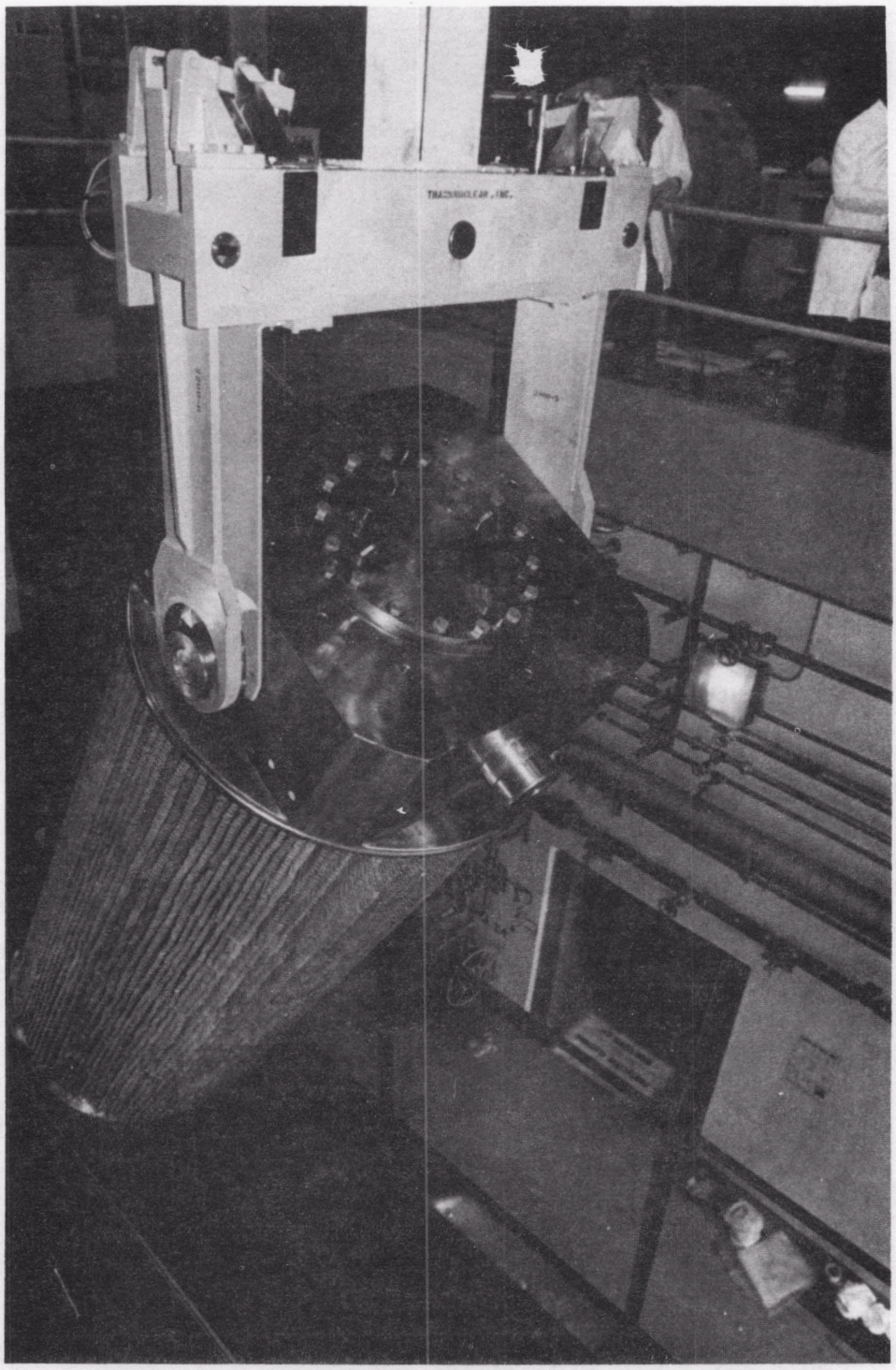

PHOTOGRAPH OF TN-9 SHIPPING CASK

NFS-4 (NAC-1)

(1) Type	Legal Weight Truck Shipping Cask
(2) Manufacturer/Vendor	Nuclear Assurance Corporation
(3) Capacity	
(a) Intact SF (Assys)	1 PWR; 2 BWR
(b) Cans Consolidated Fuel Rods	1 PWR; 2 BWR
(4) Weight (tons)	
(a) Loaded	23
(b) Empty	22
(5) Design Heat Rejection (kW)	11.5
(6) Shape	Cylindrical
(7) Dimensions	
(a) Overall Length (in)	214
(b) Overall Diameter (in)	38
(c) Cavity Length (in)	178
(d) Cavity Width (in)	13.5
(e) Inner Shell Wall Thickness (in)	0.31
(f) Lead Shield Wall Thickness (in)	6.62
(g) Outer Shell Wall Thickness (in)	1.25
(h) Neutron Shield Tank Thickness (in)	4.5
(8) Materials of Construction	
(a) Cask Body	SS/Lead
(b) Neutron Shield	
Sides	Borated Water/Antifreeze
Ends	None
(c) Basket	SS
(9) Cooling Fins	None - Smooth Surface
(10) Operating Temperature (^{o}F)	345 max.
(11) Operating Pressure (psig)	5 (984 max.)
(12) Outside Surface Dose (mR/hr)	200 max.
(13) Cavity Atmosphere	Air

(14) Licensing Status Originally licensed by AEC and NRC. NRC would not recertify the cask due to the fact that the inside cavity was constructed of 5/16-inch SS plate which was rolled and welded. There was some distortion in the inner cavity as a result of this. After the cask had been used some time NRC required documentation to show that the distortion wasn't due to shipping operations; however, these types of records were not available. Hence the cask has had limited use in transporting non-LWR fuel and can only be used for on-site transfers of LWR fuel.

(15) Comments NAC obtained license for NFS-4 cask design -- to have NAC-1 manufactured; NAC later took possession of NFS-4 casks and has rights to lease them.

A total of seven casks are in existence, one of which is owned by Duke Power Co. and the others are available for lease from NAC. Casks have interchangeable baskets for PWR and BWR fuel.

References

(1) K. H. Dufrane, Design, Manufacturing and Operational Experience with the NFS-4 Spent Fuel Shipping Cask, Proceedings of the 4th International Symposium on Packaging and Transportation of Radioactive Materials, Miami Beach, FL, September 1974.

(2) Letter W. J. Lee (NAC) to W. Etz (JAI), July 29, 1987

(3) U. S. Department of Energy, Technology for Commercial Radioactive Waste Management, Vol. 4, DOE-ET-0028, May 1979

(4) P. M. Daling and R. L. Engel, Analysis of Near-Term Spent Fuel Transportation Hardware Requirements and Transportation Costs, PNL-4575, January 1983

(5) Letter W. J. Lee (NAC) to E. R. Johnson (JAI), February 8, 1988

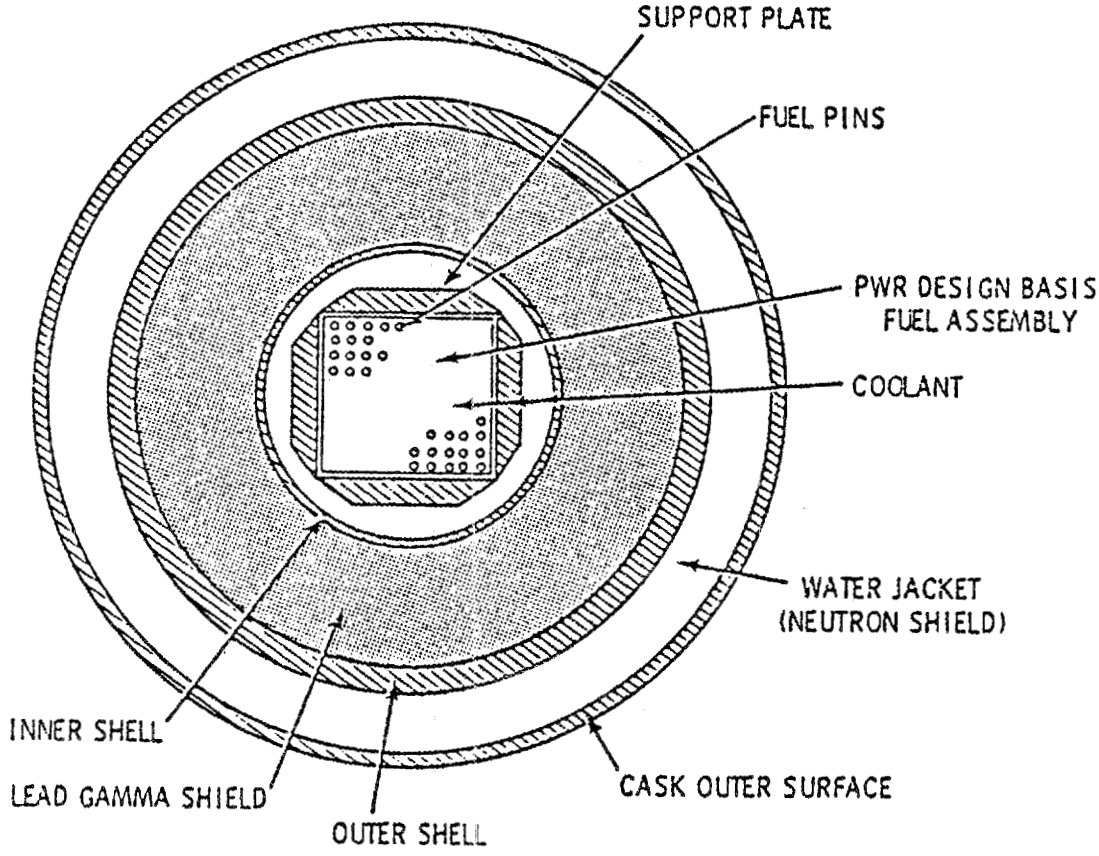

CROSS-SECTION OF NFS-4 (NAC-1) LEGAL WEIGHT TRUCK CASK

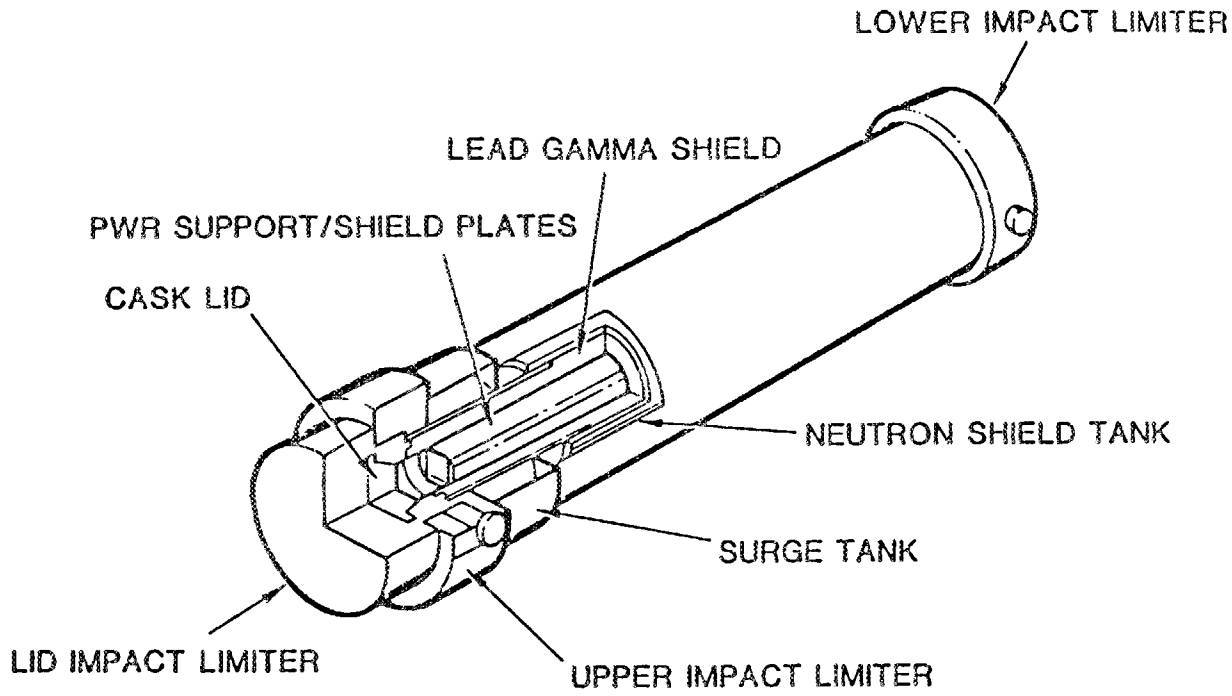

NFS-4 (NAC-1) LEGAL WEIGHT TRUCK CASK

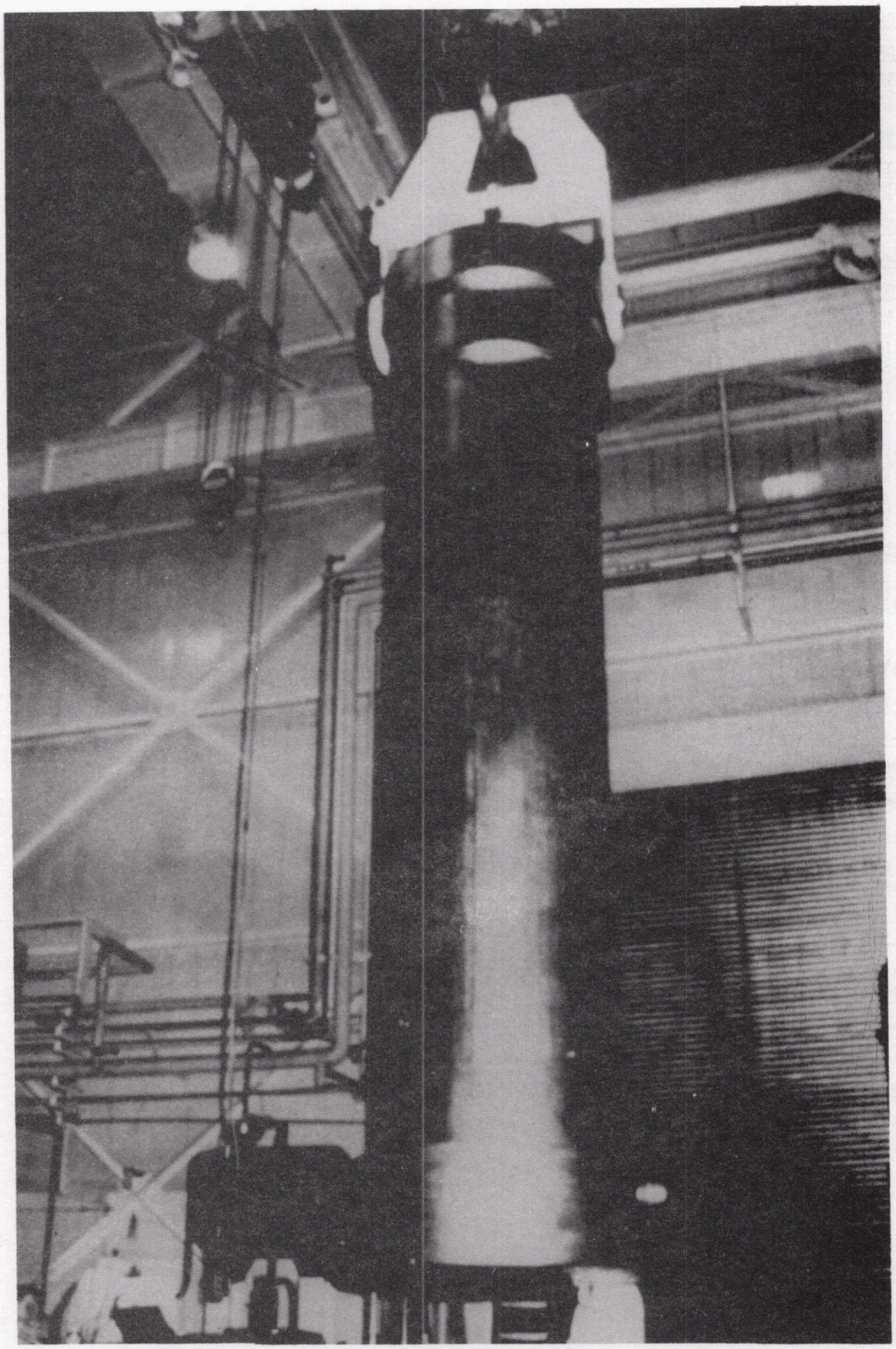

PHOTOGRAPH OF NFS-4 (NAC-1) LEGAL WEIGHT TRUCK CASK

NLI 1/2

(1) Type	Legal Weight Truck Shipping Cask
(2) Manufacturer/Vendor	NL Industries Inc.
(3) Capacity	
(a) Intact SF Assys	1 PWR; 2 BWR
(b) Cans Consolidated Fuel Rods	2 PWR; 4 BWR
(4) Weight (tons)	
(a) Loaded	23.1
(b) Empty	22.3
(5) Design Heat Rejection (kW)	10.6
(6) Shape	Cylindrical
(7) Dimensions	
(a) Overall Length (in)	195.25
(b) Overall Diameter (in)	47.12
(c) Cavity Length (in)	178
(d) Cavity Diameter (in)	13.38
(e) Inner Shell Wall Thickness (in)	0.5
(f) Lead Shield Wall Thickness (in)	2.12
(g) Depleted U Wall Thickness (in)	2.75
(h) Outer Shell Wall Thickness (in)	0.88
(i) Neutron Shield Tank Thickness (in)	5.25
(j) Inner Container Wall Thickness (in)	0.25
(8) Materials of Construction	
(a) Cask Body	SS/Lead/Depleted U
(b) Neutron Shield	
Sides	Water & Ethylene Glycol
End	None
(c) Basket	SS and Aluminum
(9) Cooling Fins	Yes
(10) Cavity Atmosphere	He; air if heat is less than 2.5 kw
(11) Operating Temperature (^{o}F)	900 (Fuel Clad)
(12) Operating Pressure (psig)	310 max.
(13) Outside Surface Dose (mR/hr)	100 max.

(14) Licensing Status Licensed by NRC in 1980; can be used to ship either intact or consolidated LWR fuel.

(15) Comments Casks have separate baskets for PWR and BWR fuel. There are a total of 5 casks currently in existence.

Casks are currently in the possession of Nuclear Assurance Corporation who has the rights to lease them.

References

(1) USNRC Certificate of Compliance No. 9010, July 16, 1980

(2) Letter W. J. Lee (NAC) to W. Etz (JAI), July 29, 1987

(3) Letter W. J. Lee (NAC) to E. R. Johnson (JAI), February 8, 1988

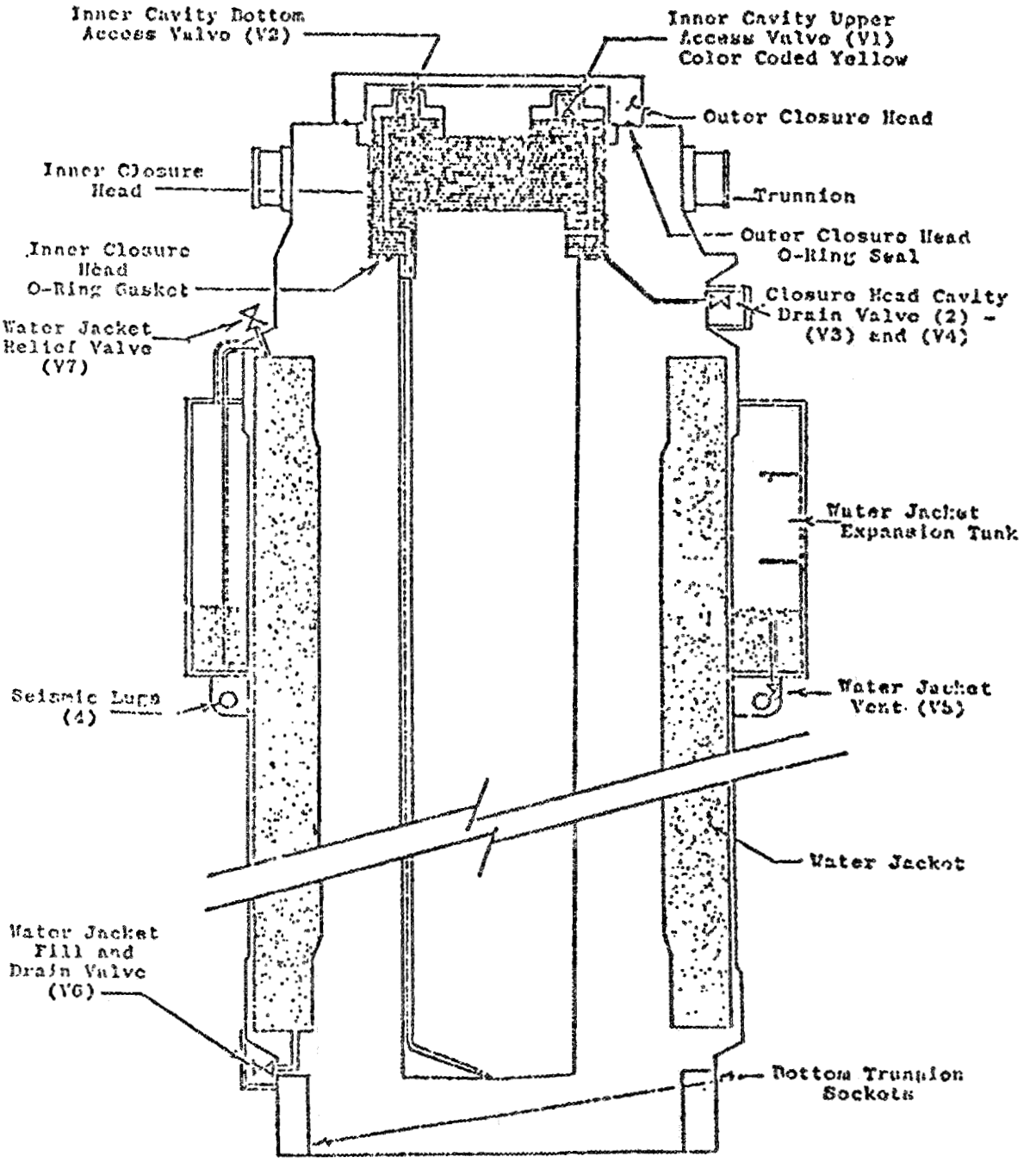

NLI 1/2 LEGAL WEIGHT TRUCK CASK

NLI 10/24

(1) Type	Rail Shipping Cask
(2) Manufacturer/Vendor	NL Industries Inc.
(3) Capacity	
(a) Intact SF Assys	10 PWR; 24 BWR
(4) Weight (tons)	
(a) Loaded	96.5
(b) Empty	89
(5) Design Heat Rejection (kW)	70
(6) Shape	Cylindrical
(7) Dimensions	
(a) Overall Length (in)	204.5
(b) Overall Diameter (in)	88
(c) Cavity Length (in)	179.5
(d) Cavity Diameter (in)	45
(e) Inner Shell Thickness (in)	0.75
(f) Outer Shell Thickness (in)	2
(g) Lead Shield Wall Thickness (in)	6
(h) Neutron Shield Tank Thickness (in)	9.75
(i) Outer Closure Head Thickness (in)	2.5
(8) Materials of Construction	
(a) Cask Body	SS/Lead
(b) Neutron Shield	
Sides	Water
Ends & Strategic Wall Locations	Ricorad
(c) Basket	Aluminum Lined with Ag-In-Cd plates in SS
(9) Cooling Fins	Concentric (forced water circulation cooling from separate cooling circuit)
(10) Dry Shipment	
(a) Atmosphere	He
(b) Cavity Pressure (psig)	23.1 (normal); 500 (max.)
(11) Wet Shipment	
(a) Medium	Water
(b) Cavity Pressure (psig)	500 (max.)
(12) Normal Operating Temperatures (w/only one of two cooling systems operative)	
(a) Outer Surface (^{o}F)	227
(b) Inner Seal (^{o}F)	268
(c) Basket (^{o}F)	451 (max.)
(d) Fuel Assembly (^{o}F)	690 (avg.)
(13) Outside Surface Dose (mR/hr)	200 max.

(14) Licensing Status Licensed by NRC for shipment using Ag-In-Cd basket. Certificate has expired and no renewal has been applied for.

(15) Comments Cask has two separate baskets, one for PWR and one for BWR. Due to no demand for the use of this cask, owner recovered silver from the baskets in the late 1970s thus no baskets exist for the cask at present. There are a total of 2 casks currently in existence.

Casks are currently in the possession of Nuclear Assurance Corporation who has the rights to lease them.

References

(1) C. E. Williams, et al, Design and Licensing Considerations of the NLI 10/24 Rail Transportation System for Shipping Spent Nuclear Fuel, Proceedings of the 4th International Symposium on Packaging and Transportation of Radioactive Materials, Miami Beach, FL, September 1974

(2) Letter W. J. Lee (NAC) to W. Etz (JAI), July 29, 1987

(3) Letter W. J. Lee (NAC) to E. R. Johnson (JAI), February 8, 1988

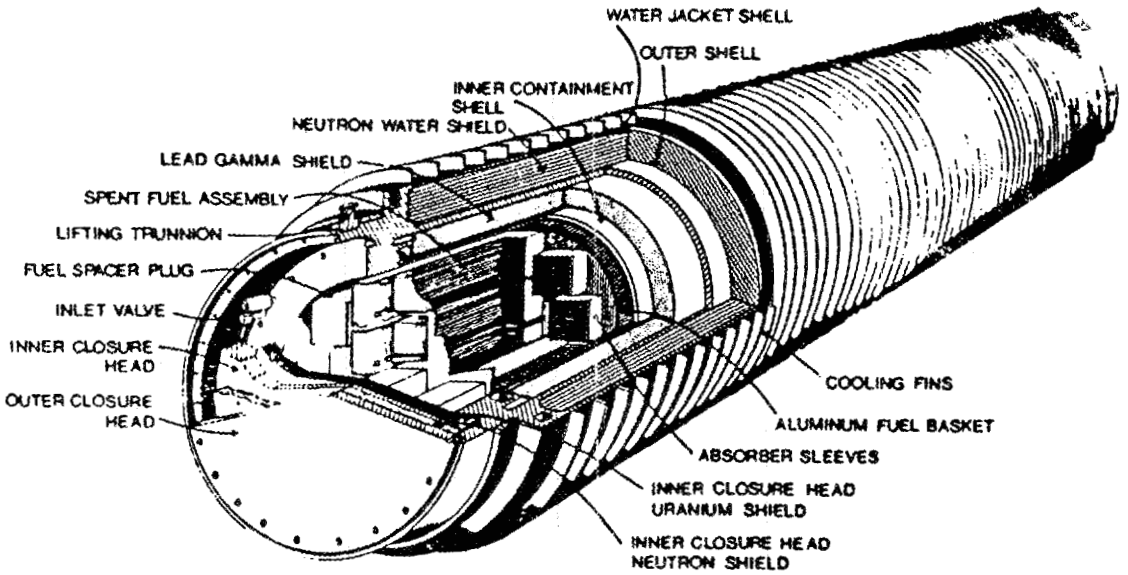

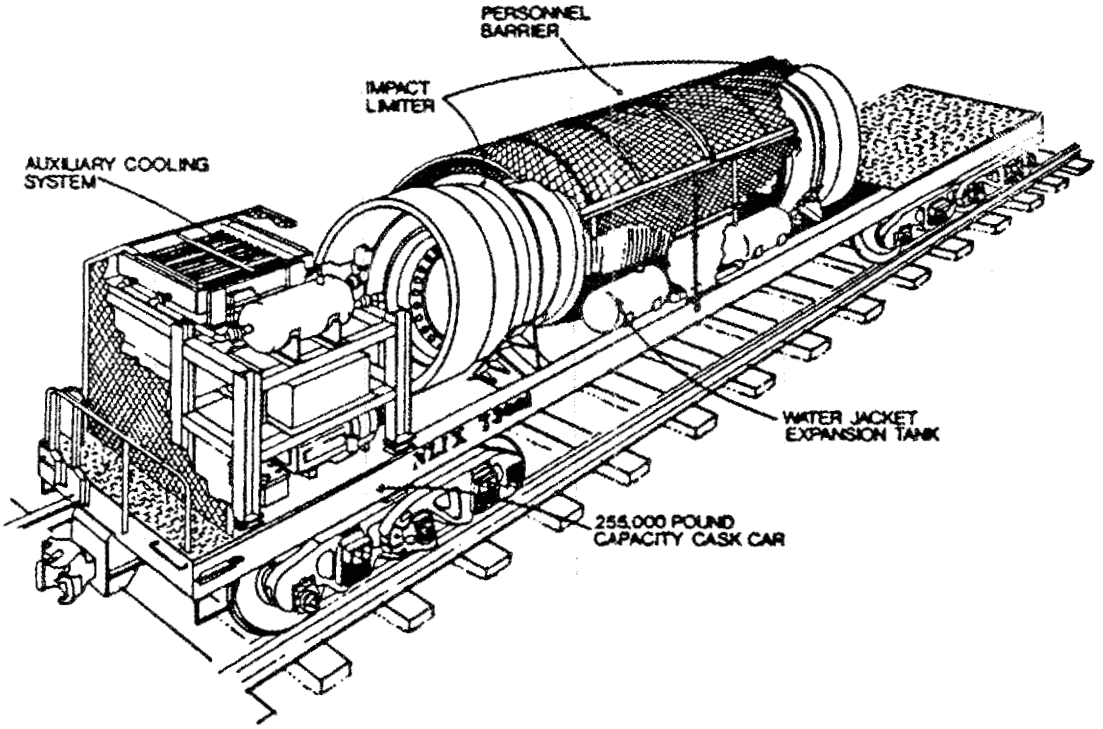

NLI 10/24 RAIL CASK

IF-300

(1) Type	Rail Shipping Cask
(2) Manufacturer/Vendor	General Electric Co./Pacific Nuclear Systems, Inc.
(3) Capacity	
(a) Intact SF Assys	7 PWR; 18 BWR
(b) Cans Consolidated Fuel Rods	7 PWR; 18 BWR
(4) Weight (tons)	
(a) Loaded	70
(b) Empty	65
(5) Design Heat Rejection (kW)	11.7
(6) Shape	Cylindrical
(7) Dimensions	
(a) Overall Length (in)	208
(b) Overall Diameter (in)	64
(c) Cavity Length (in)	180.25
(d) Cavity Diameter (in)	37.5
(e) Depleted U Shield Thickness (in)	4
(f) Neutron Shield Thickness (in)	4.5
(g) Shell(s) Thickness (in)	N/A
(8) Materials of Construction	
(a) Cask Body	SS/Depleted U
(b) Neutron Shield	
Sides	Water/Ethylene Glycol
End	None
Cavity	Water
(c) Basket	SS/B_4C
(9) Cooling Fins	Radial-Concentric (natural water circulation cooling from separate cooling circuit)
(10) Operating Temperature (^oC)	163 (fuel)
(11) Outside Surface Dose (mR/hr)	200 max.
(12) Operating Pressure (psig)	200 (400 max.)
(13) Cavity Atmosphere	Water

(14) Licensing Status Licensed by NRC.

(15) Comments Four casks currently exist. One cask is owned by Carolina Power and Light Co.; the others can be leased from Pacific Nuclear Systems, Inc. Casks have interchangeable baskets for PWR and BWR assemblies.

References

(1) U. S. Department of Energy, Technology for Commercial Radioactive Waste Management, Vol. 4, DOE/ET-0028, May 1979

(2) P. M. Daling and R. L. Engel, Analysis of Near-Term Spent Fuel Transportation Hardware Requirements and Transportation Costs, PNL-4575, January 1983

(3) General Electric Co., General Description IF-300 Irradiated Fuel Transport System, NEDO-10864C, 79NED47R, Class 1, July 1983

(4) Personal Communication, Philip A. Craig, NUPAC, January 25, 1988

N/A means not available.

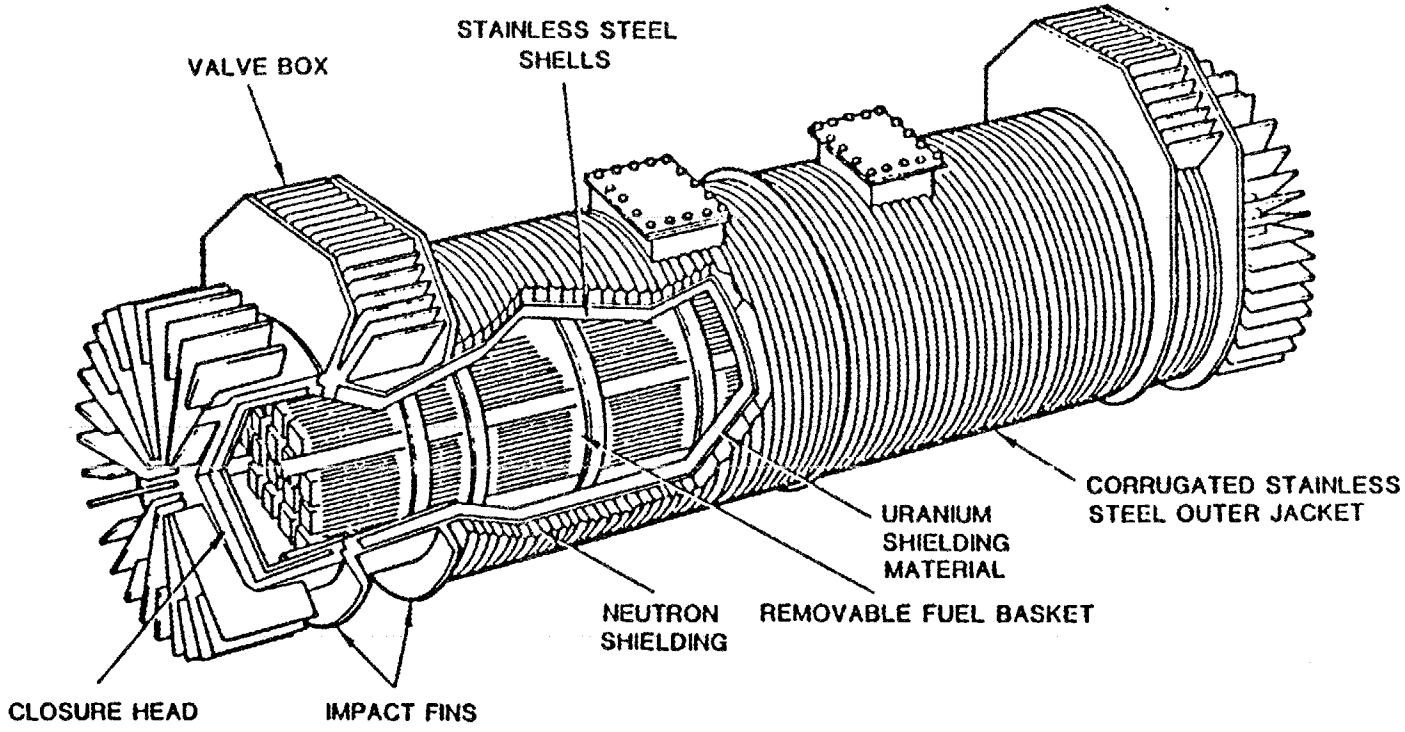

IF-300 RAIL CASK

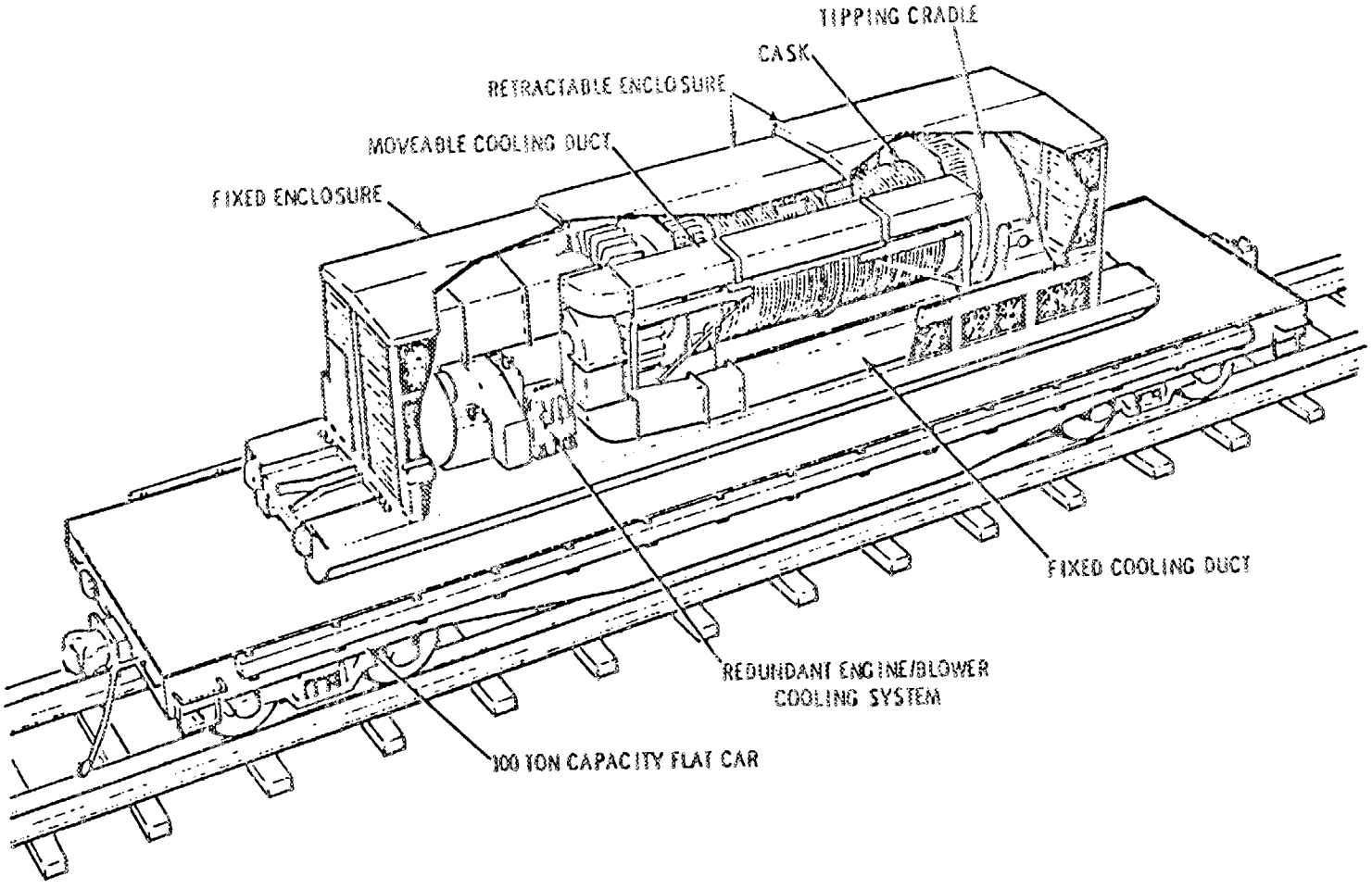

IF-300 SPENT FUEL SHIPPING SYSTEM

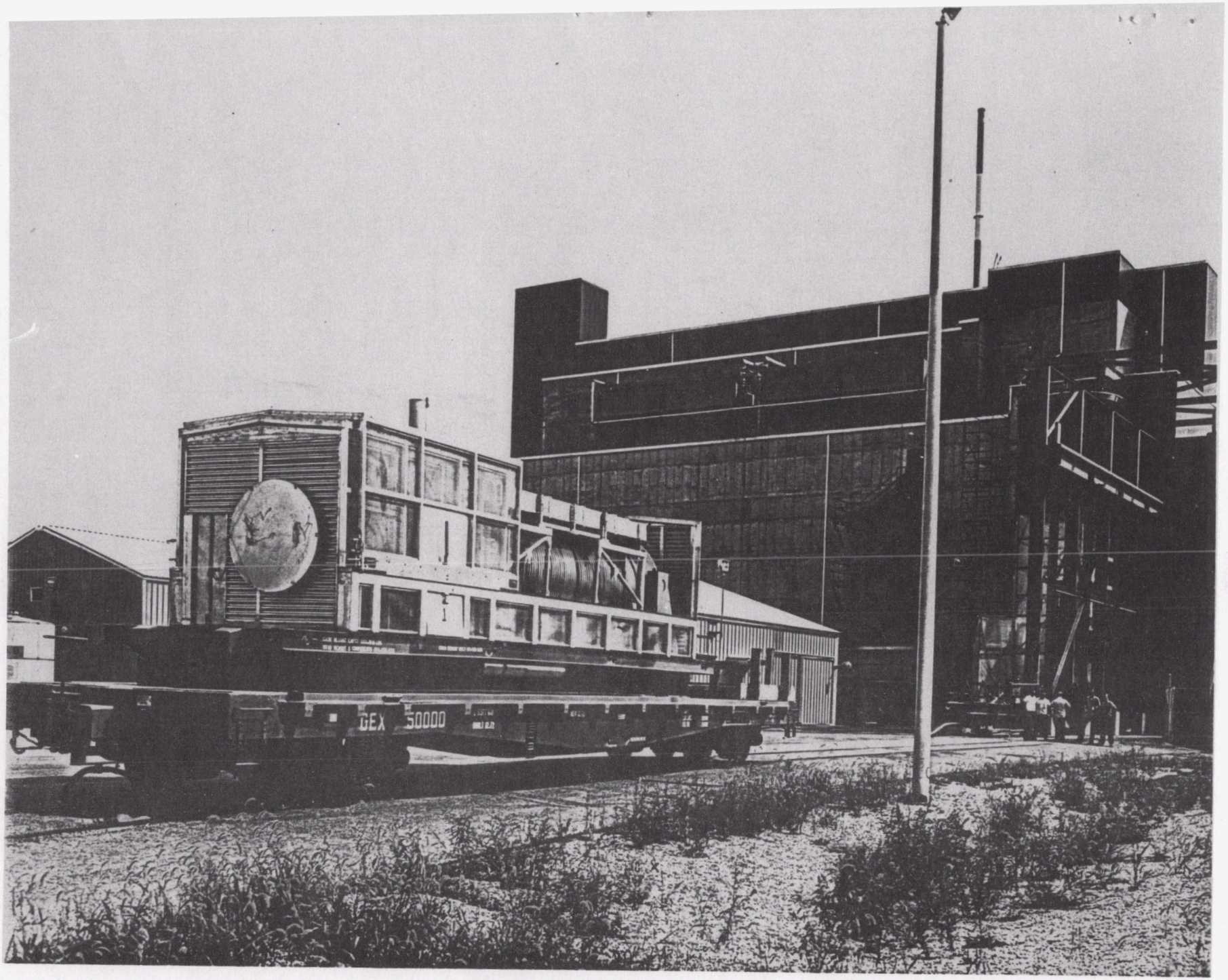

PHOTOGRAPH OF IF-300 RAIL CASK

DISTRIBUTION

DOE - Office of Civilian Radioactive Waste Management, Washington, DC 20585

D. H. Alexander
L. H. Barrett
A. B. Brownstein
W. Danker
M. W. Frei
B. G. Gale
H. J. Hale
T. H. Isaacs
S. H. Kale
K. A. Klein
V. King
W. Lemeshewsky
N. Moon
T. D. Nguyen
M. L. Payton
D. E. Shelor
W. Stringfield
E. Svenson

DOE - Office of Nuclear Energy, Washington, DC 20545

J. W. Gatrell
E. F. Mastal

DOE - Office of Defense Programs, Washington, DC 20545

W. A. Frankhauser
E. A. Jordon

DOE - Energy Information Administration, Washington, DC 20585

J. A. Disbrow
K. Gibbard
N. Hampton
B. K. O'Brien
D. Troop

DOE - Albuquerque Operations Office, P.O. Box 5400, Albuquerque, NM 87115

K. G. Golliher
D. M. Lund
J. G. Themelis

DOE - Chicago Operations Office, Bldg. 201, 9800 S. Cass Ave., Argonne, IL 60439

Cynthia Boggs-Mayes
Sally A. Mann

DOE - Chicago Operations Columbus Office, 505 King Avenue, Columbus, OH 43201

Jeffrey O. Neff
K. K. Wu

DOE - Idaho Operations Office, 785 DOE Place, Idaho Falls, ID 83402

M. Fisher
S. T. Hinschberger
J. L. Lyle
T. Rowland
J. E. Solecki
M. W. Shupe

DOE - Nevada Operations Office, P.O. Box 14100, Las Vegas, NV 89114

Carl Gertz
M. Kunich
J. Robson
E. Rodriguez
Larry Skousen
Ed Wilmot
T. Zvada

DOE - Oak Ridge Operations Office, P.O. Box E, Oak Ridge, TN 37831

M. Heiskell
D. Brown

DOE - Richland Operations Office, P.O. Box 550, Richland, WA 99352

D. Kenyon
D. C. Langstaff
J. D. White

DOE - Richland Operations, Shippingport Project Office, P.O. Box 335, Shippingport, PA 15077

J. J. Schreiber

U.S. Nuclear Regulatory Commission, Division of Waste Management, Washington, DC 20555

R. M. Bernero, Division of Risk Analysis
M. R. Knapp, Division of Waste Management
F. C. Sturtz, Office of Nuclear Material Safety and Safeguards

Argonne National Laboratory, 9700 S. Cass Ave., Argonne, IL 60439

S. Y. Chen
M. J. Steindler
Y. C. Yuan

Brookhaven National Laboratory, Upton, Long Island, NY 11973

B. Barletta
R. Fullwood
C. Sastre

Lawrence Livermore National Laboratory, P.O. Box 808, Livermore, CA 94550

Lyn Ballou
W. R. Lloyd
H. Shaw

Los Alamos National Laboratory, P.O. Box 1663, Los Alamos, NM 87545

D. T. Oakley
J. L. Warren

Oak Ridge National Laboratory, P.O. Box 2008, Oak Ridge, TN 37831

A. G. Croff
C. W. Forsberg
D. S. Joy
J. A. Klein
S. B. Ludwig
K. J. Notz (30 copies)
R. R. Rawl
J. W. Roddy
R. Salmon
J. H. Saling
L. B. Shappert
S. N. Storch
V. C. A. Vaughen
T. D. Welch

Pacific Northwest Laboratory, P.O. Box 999, Richland, WA 99352

G. H. Beeman
B. M. Cole
G. M. Holter
R. A. Libby
A. T. Luksic
R. W. McKee
M. R. Shay
A. Van Luik
R. W. Walling
T. Wood

Sandia National Laboratory, P.O. Box 5800, Albuquerque, NM 87185

J. W. Cashwell
A. W. Dennis
T. Sanders

Advanced Nuclear Fuels Corporation, P.O. Box 90777, Bellevue, WA 98009

W. S. Dunnivant
M. Ungar

Advanced Nuclear Fuels Corporation, 2101 Horn Rapids Road, Richland, WA 99352

D. Adams

ASG, Inc., 800 Oak Ridge Turnpike, Oak Ridge, TN 37830

R. S. Moore

Babcock & Wilcox, P.O. Box 10935, Lynchburg, VA 24506

P. Childress
L. Hassler
J. Matheson
L. Walton

Battelle - Columbus Laboratories, 505 King Ave., Columbus, OH 43201

W. Pardue
R. W. Peterson

Battelle - Chicago Office, 7000 South Adams, Willowbrook, IL 60521

H. Avci

Bechtel National, Inc., P.O. Box 3965, San Francisco, CA 94119

L. Jardine
C. W. Ma

Bechtel National Inc., P.O. Box 350, Oak Ridge, TN 37830

P. Bradbury

Brown Boveri Nuclear Services, Inc., 9190 Red Branch Road, Columbia, MD 21045

B. Snyder

Chem Nuclear, 220 Stoneridge Drive, Columbia, SC 29210

F. Bolyard
B. Staley

Combustion Engineering, 1000 Prospect Hill Road, Windsor, CT 06095

W. Burns
D. Hayduk

Commonwealth Edison, 72 West Adams St., Chicago, IL 60690

H. E. Bliss
J. M. Dolter
B. F. Momsen

David Andress Associates, Inc., 11008 Harriett Lane, Kensington, MD 20895

D. Andress

Edison Electric Institute, 1111 19th Street NW, Washington, DC 20036

S. Kraft, UNWMG

EG&G Idaho, Inc., P.O. Box 1625, Idaho Falls, ID 83415

T. Howell
M. A. Knecht
W. R. Paskey
R. Piscatella
K. L. Williams
H. Worle

EPRI - Electric Power Research Institute, P.O. Box 10412, Palo Alto, CA 94303

R. W. Lambert
O. Ozer
R. Yang

E. R. Johnson Associates, Inc., 11702 Bowman Green Dr., Reston, VA 22090

E. R. Johnson
N. B. McLeod

Fluor Technologies, Inc., 3333 Nicholsen Drive, Irvine, CA 92730

J. K. Clark
V. Pierce

Fluor Technologies, Inc., 505 King Ave., Columbus, OH 43201

J. R. Fitch

General Atomics, P.O. Box 85608, San Diego, CA 92138

S. D. Su

General Electric Nuclear Energy, 175 Curtner Ave., San Jose, CA 95125

R. E. Spicka

H & R Technical Associates, 575 Oak Ridge Turnpike, Oak Ridge, TN 37830

W. R. Rhyne

Kaiser Engineering, P.O. Box 23210, Oakland, CA 94623

H. Isakari

Northern States Power Co., 414 Nicollet Mall 104, Minneapolis, MN 55401

L. McCarten

Nuclear Assurance Corp., 6251 Crooked Creek Road, Norcross, GA 30092

J. Houston
W. J. Lee
N. Mote

Nuclear Packaging, Inc., 1010 South 336th Federal Way, WA 98003

J. R. Schornhorst

NUS Corporation, 910 Clopper Road, Gaithersberg, MD 20878

C. Heath

PAI Corporation, P.O. Box 1135, Oak Ridge, TN 37830

C. G. Lawson
D. L. Phung

Pickard, Lowe, & Garrick, Suite 730, 1615 M. Street NW, Washington, DC 20036

M. H. Schwartz

REECO, P.O. Box 14400, Las Vegas, NV 89114

G. W. Kendall

RE/SPEC Inc., P.O. Box 14984, Albuquerque, NM 87191

S. Petney

Rochester Gas & Electric Corp., 89 East Ave. , Rochester, NY 14649

A. A. Fuierer

Science Applications International Corp., 3015 Hopyard Road, Suite M, Pleasanton, CA 94556

C. Smith

Science Applications International Corp., 2929 Kenny Road, Suite 245, Columbus, OH 43221

R. Best

Science Applications International Corp., 20030 Century Blvd., Suite 201, Germantown, MD 20874

R. E. Yoder

Science Applications International Corp., 101 Convention Center Drive, Las Vegas, NV 89109

R. Morrisette
J. Waddell

State of Nevada, Division of Health, 505 East King St., Carson City, NV 89710

S. Marshall

Transnuclear, Inc., One North Broadway, White Plains, NY 10601

W. R. Teer

University of Arizona, Department of Nuclear and Energy Engineering, Tucson, AZ 85721

R. G. Post
M. E. Wacks

University of Florida, Department of Nuclear Engineering Sciences, Gainesville, FL 32611

J. S. Tulenko
D. A. Williamson

Westinghouse Hanford Company, P.O. Box 1970, Richland, WA 99352

R. A. Watrous
D. D. Wodrich

Westinghouse Idaho Nuclear Company, P.O.Box 4000, Idaho Falls, ID 83404

J. R. Berreth
D. A. Knecht

Westinghouse Electric Corp., Nuclear Waste Department, P.O. Box 3912, Pittsburgh, PA 15230

C. C. Little
B. R. Nair
A. L. Shah

R. F. Weston, 955 L'Enfant Plaza SW, Eighth Floor, Washington, DC 20024

M. Conroy
J. DiNunno
J. Lilly

R. F. Weston, 1 Weston Way, West Chester, PA 19380

R. R. Macdonald

Given distribution as shown in document DOE/TIC-4500, (Interim 3) under these categories:

UC-70	Nuclear Waste Management (RW)
UC-71	Transportation of Property and Nuclear Materials`(RW)
UC-85	Spent Fuel Storage (RW)
UC-510	Nuclear Waste Management (NE)

Extra copies for OSTI to fill orders (200 copies).