MARTIN MARIETTA ENERGY SYSTEMS LIBRARIES

3 4456 0279126 3

ORNL/TM-10401

ornl

OAK RIDGE
NATIONAL
LABORATORY

MARTIN MARIETTA

Stress and Buckling Analyses of the Army M198 Howitzer Trails

R. C. Gwaltney

OAK RIDGE NATIONAL LABORATORY
CENTRAL RESEARCH LIBRARY
CIRCULATION SECTION
4500N ROOM 175
LIBRARY LOAN COPY
DO NOT TRANSFER TO ANOTHER PERSON
If you wish someone else to see this report, send in name with report and the library will arrange a loan.

OPERATED BY
MARTIN MARIETTA ENERGY SYSTEMS, INC.
FOR THE UNITED STATES
DEPARTMENT OF ENERGY

Printed in the United States of America. Available from
National Technical Information Service
U.S. Department of Commerce
5285 Port Royal Road, Springfield, Virginia 22161
NTIS price codes—Printed Copy: A02 Microfiche A01

This report was prepared as an account of work sponsored by an agency of the United States Government. Neither the United States Government nor any agency thereof, nor any of their employees, makes any warranty, express or implied, or assumes any legal liability or responsibility for the accuracy, completeness, or usefulness of any information, apparatus, product, or process disclosed, or represents that its use would not infringe privately owned rights. Reference herein to any specific commercial product, process, or service by trade name, trademark, manufacturer, or otherwise, does not necessarily constitute or imply its endorsement, recommendation, or favoring by the United States Government or any agency thereof. The views and opinions of authors expressed herein do not necessarily state or reflect those of the United States Government or any agency thereof.

ORNL/TM-10401

Engineering Technology Division

STRESS AND BUCKLING ANALYSES OF THE ARMY M198 HOWITZER TRAILS

R. C. Gwaltney

Date Published - October 1987

NOTICE: This document contains information of a preliminary nature. It is subject to revision or correction and therefore does not represent a final report.

Prepared for the
Army Materials Technology Laboratory
under DOE Interagency Agreement No. 40-1689-85

Prepared by the
OAK RIDGE NATIONAL LABORATORY
Oak Ridge, Tennessee 37831
operated by
MARTIN MARIETTA ENERGY SYSTEMS, INC
for the
U.S. DEPARTMENT OF ENERGY
under contract DE-AC05-84OR21400

MARTIN MARIETTA ENERGY SYSTEMS LIBRARIES
3 4456 0279126 3

CONTENTS

	Page
ABSTRACT	1
INTRODUCTION	1
PROBLEM DESCRIPTION	2
FINITE ELEMENT MODEL	2
Stress Analysis	3
Buckling Analysis	6
DISCUSSION OF RESULTS	11
ACKNOWLEDGMENTS	12
REFERENCES	12

STRESS AND BUCKLING ANALYSES OF THE ARMY M198 HOWITZER TRAILS

R. C. Gwaltney

ABSTRACT

This report presents stress and buckling analyses of the Army's 155 mm M198 Howitzer trails. The analyses of the current aluminum baseline component was done to evaluate the design margins of the present design so that this information could be used in the design of the new "lightened" or composite howitzer. The buckling analysis showed the effects of torsional buckling and the torsional stiffening effect of the transverse bulkheads in the trails. The torsional buckling effects have not been previously reported in the literature.

Keywords: stress, buckling, howitzer, trail torsional buckling, lateral buckling

---

INTRODUCTION

The U.S. Army is developing composite howitzers in the Army Lightweight Howitzer Program. Use of composite materials is rapidly increasing because of the considerable advantage they offer in strength-to-weight ratio. The Army is now stressing mobility, and this produces an incentive to lighten weapons so that they can be transported by air for rapid deployment. The Army Materials Technology Laboratory with other Army research laboratories is assisting the Armament Research and Development Engineering Center with the development of a 155 mm Howitzer system which weighs only 9000 lb. It was decided that the present M198 155 mm towed howitzer system should be reduced from its current weight of 16,000 lb to 9000 lb primarily by substitution of composites for the aluminum and steel structural components. Oak Ridge National Laboratory is assisting the Army Materials Technology Laboratory by designing, analyzing, and structurally testing lightweight composite replacement components such as the top and bottom carriage for the M198 howitzer.

As part of the Oak Ridge support, the current M198 howitzer trails were structurally analyzed both for stress level and buckling mode. The

analysis was done to evaluate the design margins of the present system so that this information could be used in the design of the new "lightened" or composite howitzer. These analyses are presented in this report.

PROBLEM DESCRIPTION

The current M198 howitzer trail was analyzed for a vertical reaction force of 22,142 lb applied to the spade end and a horizontal reaction force of 43,292 lb acting on the spade blade which produces a moment of 432,920 in.-lb applied to the trail end. The reactions acting on the trail were calculated in a dynamic force analysis reported in Ref. 1 and shown in Fig. 1(*a*). The plates on the top and bottom of the trail through which the hinge is pinned to the bottom carriage carry the reactions into the carriage [see Fig. 1(*a*)]. The trail is an aluminum weldment approximately 17 ft long. It consists of a tapered box section 22 in. by 10 in. at the hinge pin end and 13 in. by 10 in. at the spade end. The box section consists of four 3-in. by 4-in. angles with side, top, and bottom plates. The top and bottom plates are tapered from 1/4 in. thick at the spade end to 1/2 in. thick at the hinge pin end. Eleven bulkheads are located at various intervals along the inside length of the trail. These bulkheads are 1/4 in. thick.

FINITE ELEMENT MODEL

The ADINA general purpose code was used for the analysis since this code is recognized for its ability to do linearized and nonlinear buckling analysis as well as having most other capabilities for the analysis of complex structural problems. The finite element model used for the analysis is shown in Fig. 1(*b*). The model contained 244 nodes and 286 four-node shell elements. The plates, angles, and bulkheads were all constructed out of shell elements.

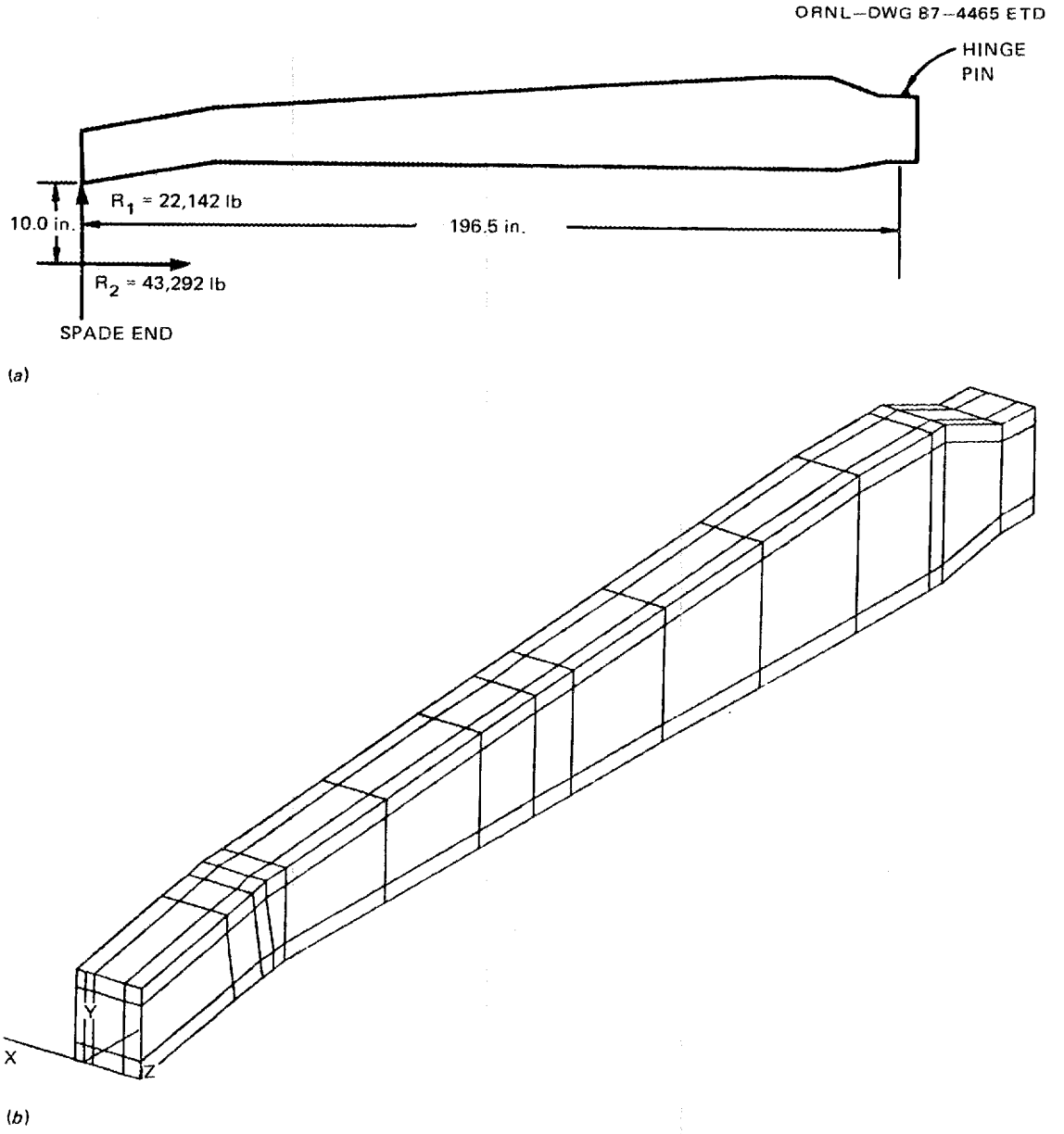

Fig. 1. (*a*) Schematic of trail showing applied loads, (*b*) finite-element model of the current M198 howitzer trail.

Stress Analysis

The calculated axial stresses for the assumed loading conditions are shown in Figs. 2 and 3. These views are looking at the side, top, and bottom of the trail. The stresses on the bottom surface are tensile since the trail is being bent in an upward direction while the stresses on the

ORNL-DWG 87-4466 ETD

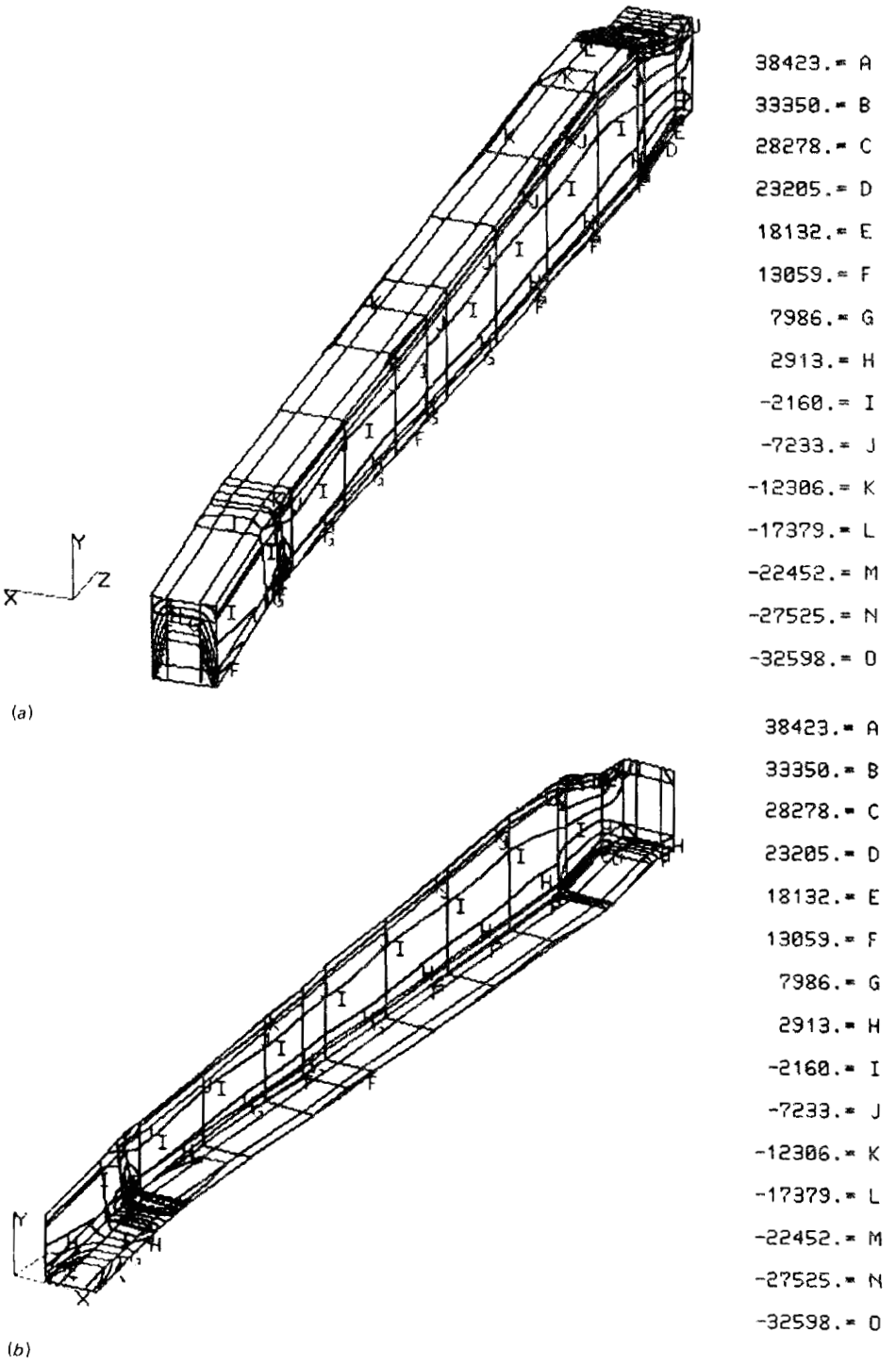

Fig. 2. (*a*) Axial stress on the inside surface of the plates, top and side view, (*b*) axial stress on the inside surface of the plates, bottom and side view.

ORNL-DWG 87-4467 ETD

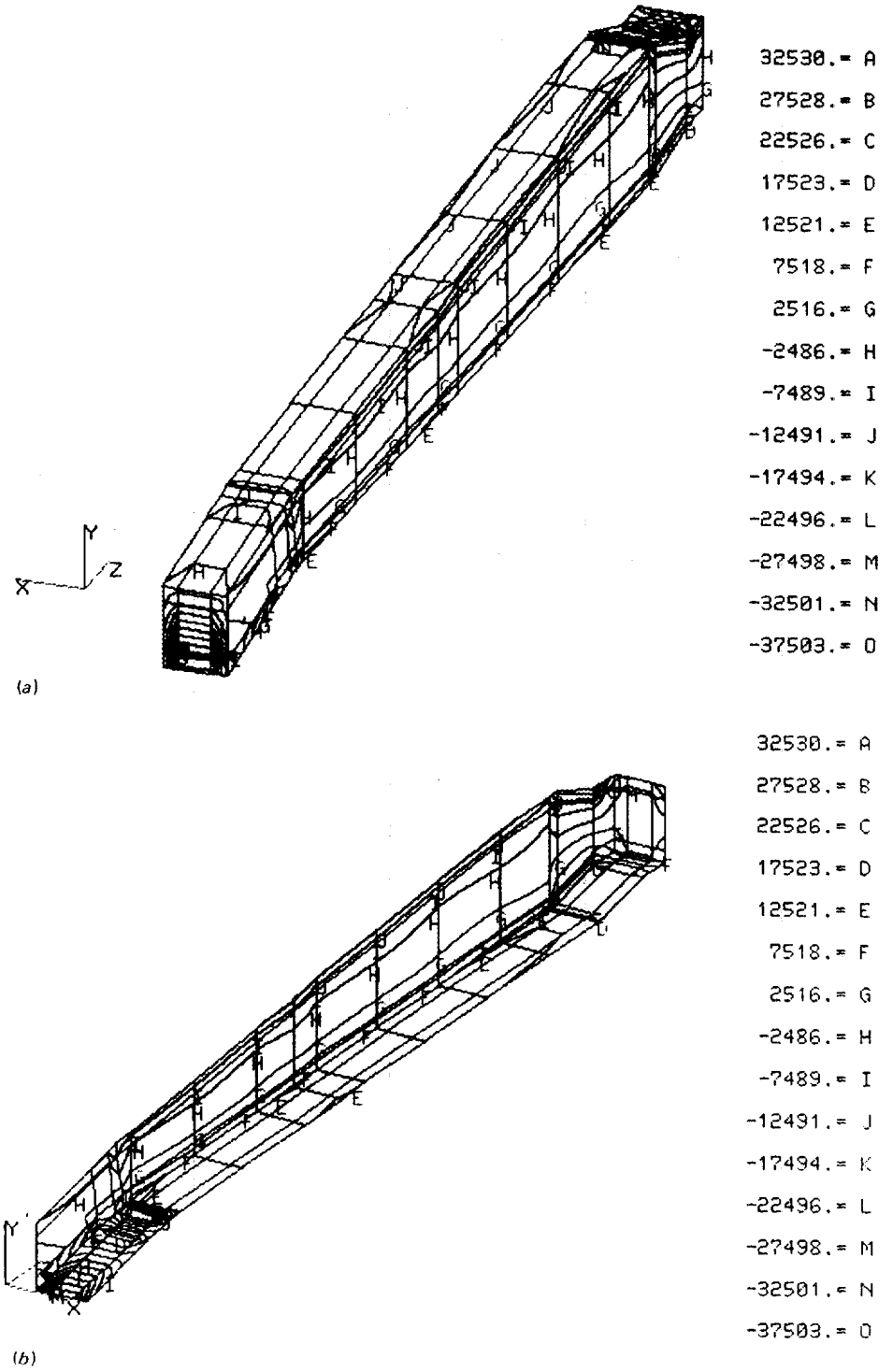

Fig. 3. (*a*) Axial stress on the outside surface of the plates, top and side view, (*b*) axial stress on the outside of the plates, bottom and side view.

top surface are compressive. The high stress regions are shown to be at the spade end, at the bottom angles between the second and third bulkhead, and around the hinge pin or bolt. The stresses at the spade end are fictional because the spade itself was not modeled and the loads are applied along the bottom edge of the end plate on the trail. The maximum stress is approximately 66,000 psi in the angles between the second and third bulkheads from the spade end. As can be seen by Figs. 2 and 3, the center region of the trail acts as a beam in bending with little variation of the stresses through the plate thickness. Only at the two ends does the stress state become much more complex. The stress state in the top and bottom plates is almost constant (the top is compressive and the bottom is tensile), but it should be remembered that the thickness of the top and bottom vary, so the forces and moments in these plates vary with length. Because of the plate bending taking place, the forces and moments in the trail are not statically determinate and the stresses can only be calculated by three-dimensional methods. However, it is obvious that the trail central region can be approximated by beam-type calculations. A sample calculation at 188 in. from the spade end using strength of materials beam equations and section properties from Ref. 1 was done, resulting in a stress of −11,047 psi in trail top surface right before the last bulkhead. The computer-calculated stress level for this area is approximately −12,300 psi as can be seen in Figs. 2 and 3.

Buckling Analysis

The buckling analysis of the trail is similar to the analysis of a box beam structure. However, the trail has internal bulkheads to increase torsional stiffness. Since the trail is loaded by a vertical force and a bending moment at one end and is fixed at the other end, it acts as a cantilevered box beam. The linearized buckling analysis encoded in the ADINA program was used to calculate the first five modes of buckling in the trail, keeping the ratio of the vertical force to the bending moment the same as in the stress analysis. Notice that the buckling deformations calculated would be different if the force to bending moment ratio were changed. Because of the kinematic relations (deformations) between the

forces and moments of the plates in the trail, the relation between the force and moment are not linear. Therefore, the buckling loads will vary somewhat as the load configuration is changed.

The computer-calculated buckling modes are shown in Figs. 4 through 8. An exaggerated factor is used to show the deformed shape of the buckled modes. The factor is such that the maximum displacement is drawn as if it were equal to one-tenth of the maximum dimension of the trail and all other displacements are scaled accordingly. The trail seems to be in a state of lateral buckling in all five modes. A cantilever beam usually collapses in a lateral buckling mode when loaded at the free end by a vertical force (like a shear force). Lateral buckling is a combined torsional and flexure buckling mode. As can be seen in Figs. 4 and 5, there is some small amount

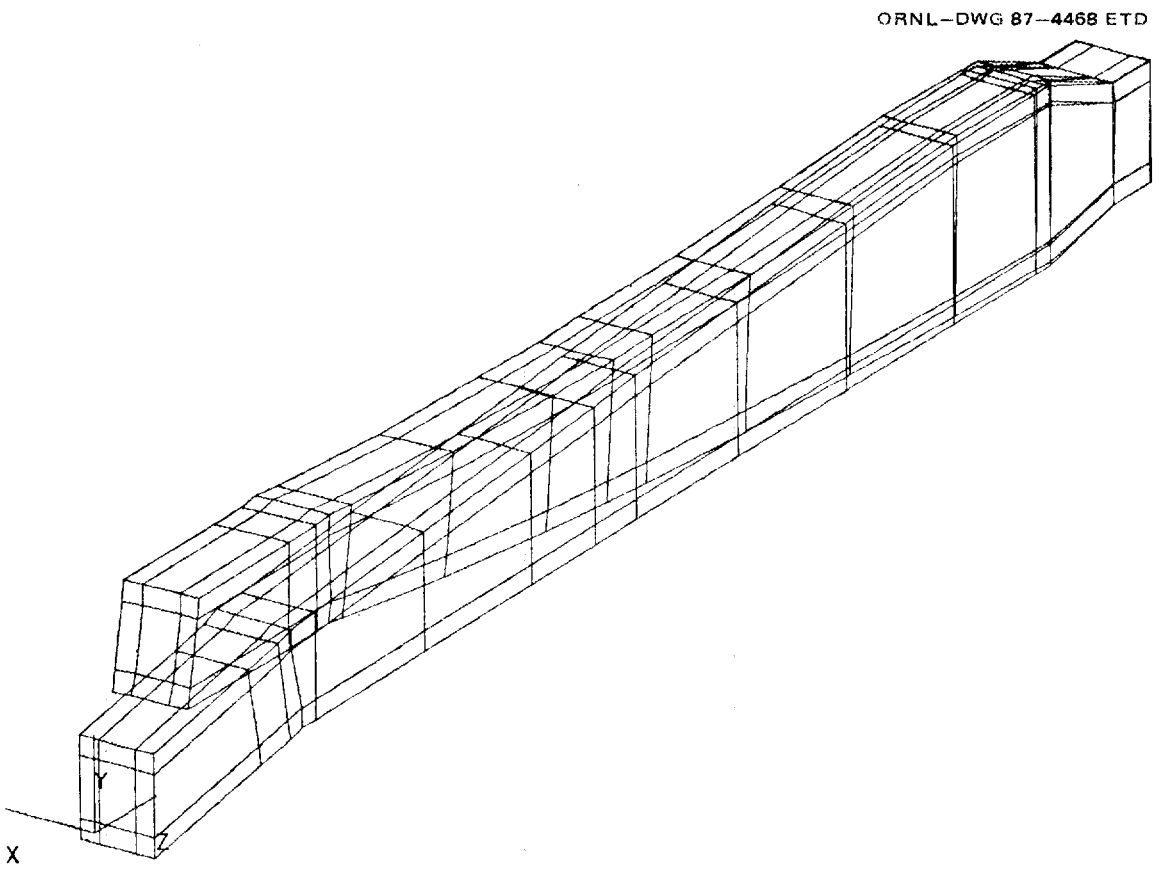

Fig. 4. First mode buckling shape of the current M198 howitzer trail.

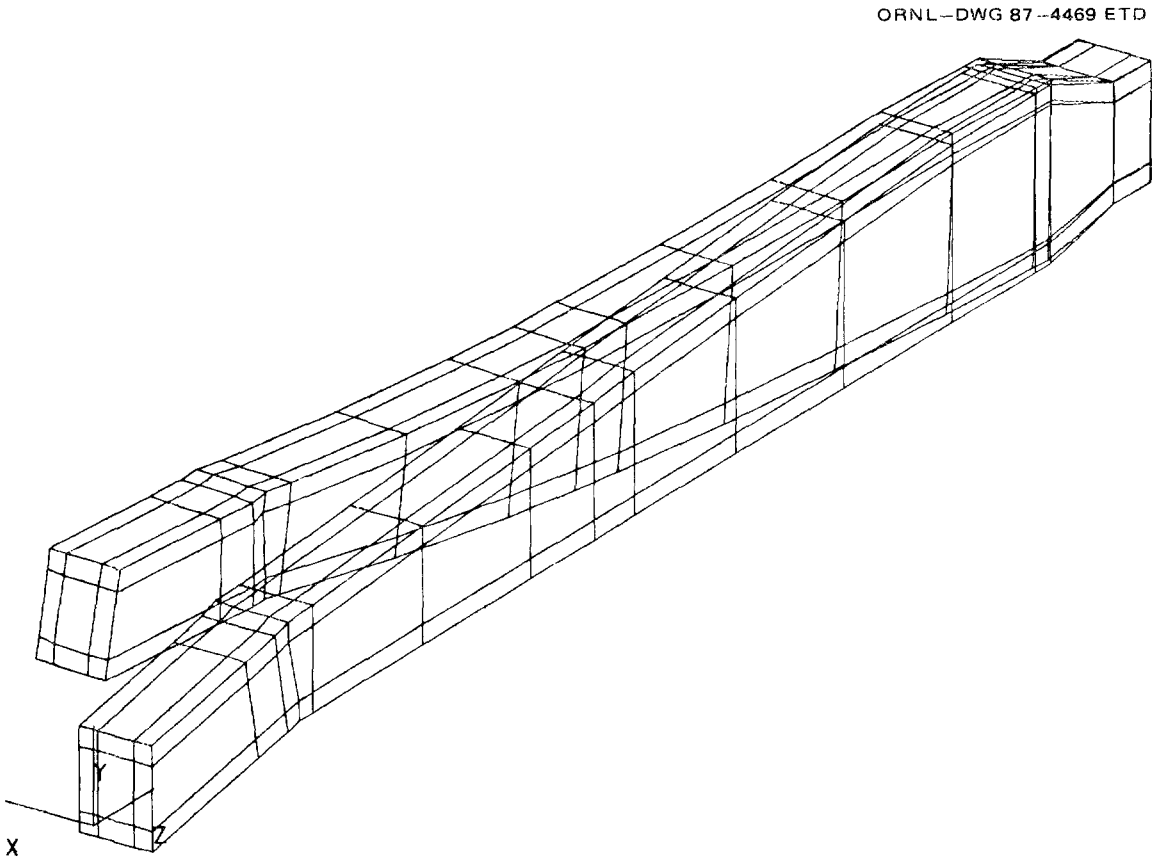

Fig. 5. Second mode buckling shape of the current M198 howitzer trail.

of twist along with the flexure deformation. The third buckling mode shape (Fig. 6) is a classic lateral buckling mode. The fourth and fifth modes show lateral buckling even though not as much twist takes place in these two modes.

Comparisons of the stresses in the uniformly stressed portion of the trail away from the ends when buckling occurred were made to the buckling stresses determined by analytical procedures and are listed in Table 1. The method due to Oplinger and Gandhi[2] for the flange calculation uses a long simply supported uniform rectangular plate to model the compression flange. This compares very well with the first two or three buckling modes. Oplinger and Gandhi's method for the web does not compare as well, but it should not, since this method is based on the shear stress in the web, a phenomenon which is negligible in the trail side or web plates.

ORNL-DWG 87-4470 ETD

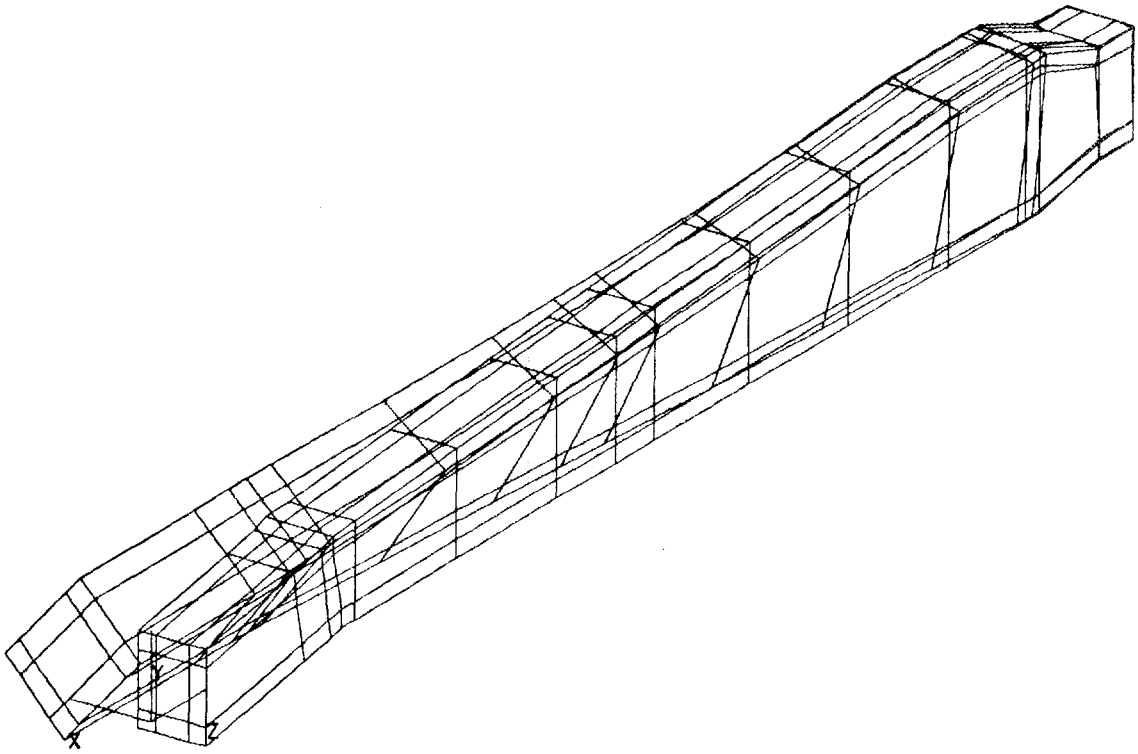

Fig. 6. Third mode buckling shape of the current M198 trail.

Table 1. Comparison of buckling stresses

Buckling mode	Flange		Web	
	ADINA	Oplinger and Gandhi procedure	ADINA	Oplinger and Gandhi procedure
First mode	−21,850	−23,075[a]	−8,800[b]	−18,300[c]
Second mode	−23,800		−9,600	
Third mode	−25,830		−10,400	
Fourth mode	−27,100		−10,930	
Fifth mode	−28,450		−11,470	

[a]The flange tapers from 1/4-in. to 1/2-in. thickness. This value is calculated using the 1/4-in. thickness (using the 1/2-in. thickness, this value is 92,300 psi).

[b]This is the average stress in the web assumed for this calculation. As Figs. 2 and 3 show the stress varies through the depth of the web.

[c]The web depth varies from 13 in. to 22 in. This value is calculated based on the 13-in. depth (using the 22-in. depth, this value is 6,390 psi). This value is a shear stress.

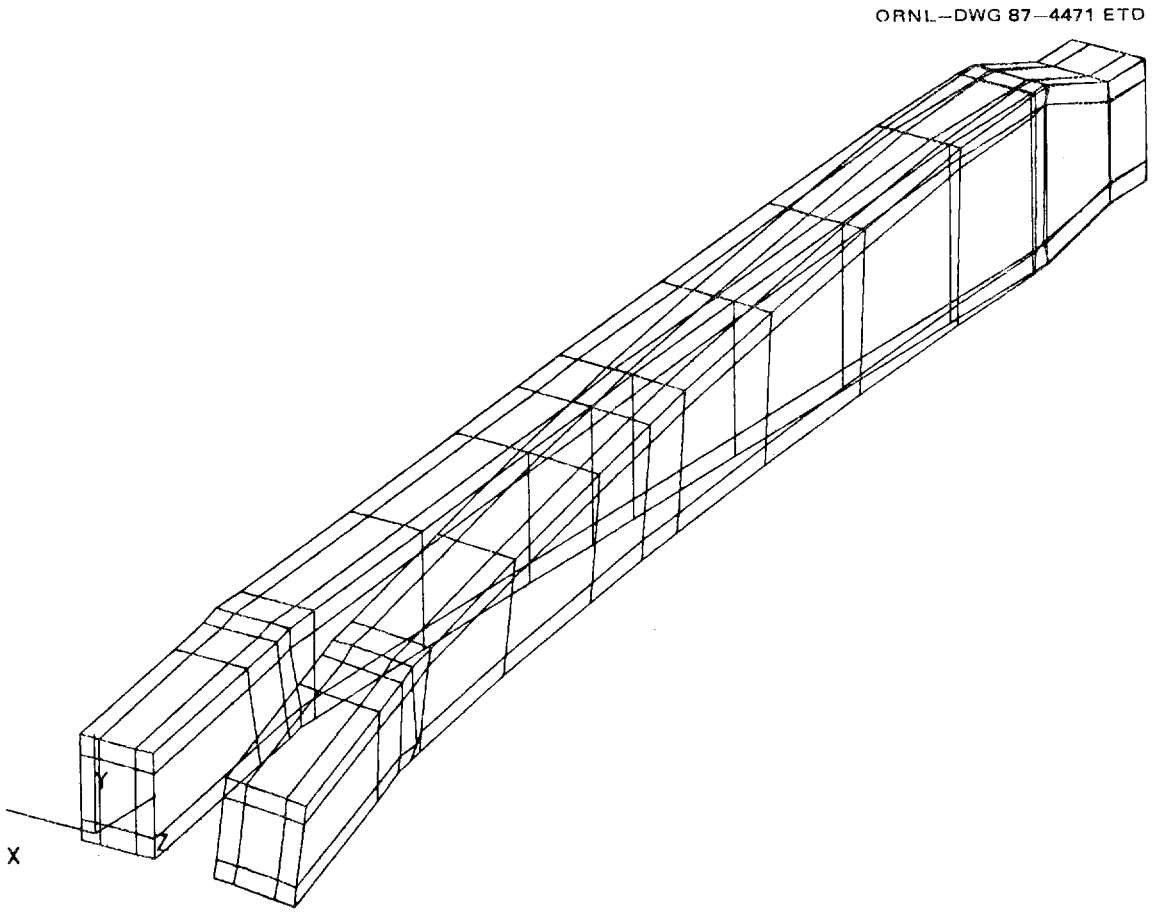

Fig. 7. Fourth mode buckling shape of the current M198 trail.

These plates may have some shear stress loading but the dominant stress state is a nonuniform longitudinal compressive stress as can be seen in Figs. 2 and 3. In the open literature, the equation for calculating the critical buckling stress in a box beam is given as:[3]

$$\sigma_{cr} = \frac{\pi^2 E}{12(1 - \nu^2)} \left(\frac{h}{b}\right)^2 K ,$$

where E is modulus of elasticity, ν is Poisson's ratio, h is plate thickness, and b is the depth of the box beam. The constant K will vary from 4.7 to 6.4 for the present trail configuration. This equation will overpredict the critical buckling stress since Oplinger and Gandhi's procedure for the flange has the same equation form except that K is equal to 4 corresponding to a plate of infinite length. The open literature equation

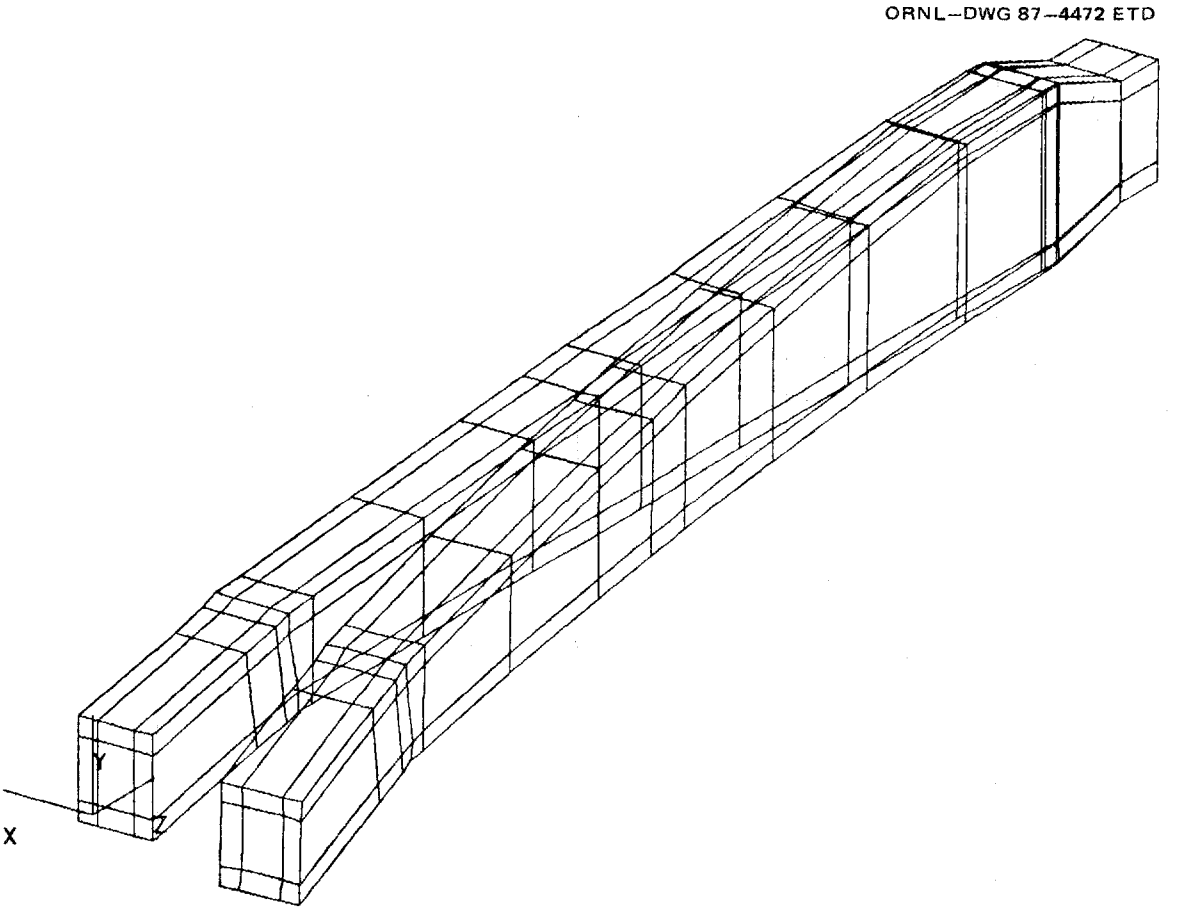

Fig. 8. Fifth mode buckling shape of the current M198 trail.

for the side plates to buckle under the nonuniform longitudinal compressive stress is of the same form, but K can vary from 8.4 to 29.1 depending upon the distribution of the nonuniform compressive stress in the side or web plates.[3,4] Again, this equation or analysis method would overpredict the critical buckling stress.

DISCUSSION OF RESULTS

The Oplinger and Gandhi procedure gave the closest approximation to the first buckling mode calculated by the computer code. However, it should be pointed out that the comparisons were made in the region of the trail that acts like a box beam. As noted earlier, localized higher stresses are calculated in the trail than are predicted by the analytical

procedures from the open literature. Also the procedures do not consider the bulkheads which helped to reduce the torsion. Without the bulkheads the buckling loads would be lower. The designers need to keep these facts in mind as they calculate preliminary sizes using these open literature procedures. The open literature equations are more suited to beam column buckling not lateral buckling.

The study presented in this report showed that the design of the current trail for the M198 howitzer is well designed, with torsional buckling taken into account. The bulkheads at various intervals along the trail provided for torsional stiffness which was needed to resist buckling and to increase the resistance to compression. It is clear from this study that torsional and lateral buckling must be considered.

ACKNOWLEDGMENTS

This work was supported by the Army Materials Technology Laboratory, Watertown, Mass. The advice and guidance of D. W. Oplinger and K. R. Gandhi are gratefully acknowledged. The author acknowledges with appreciation the contributions to this study of several individuals at Oak Ridge National Laboratory. B. L. P. Booker helped in the development of the finite element model; G. T. Yahr gave technical advice; and D. T. Godwin helped prepare the figures.

REFERENCES

1. C. M. Robinder, *Stress Analysis of 155 mm Towed Howitzer XM198 Numbers 1 and 2*, SWERR-TR-72-16, Research Directorate, Weapons Laboratory at Rock Island, U.S. Army Weapons Command, Rock Island, Illinois, March 1972.

2. D. W. Oplinger and K. R. Gandhi, *Results of Tradeoff Studies of Composite Concepts for Lightweight Towed 155 mm Howitzer*, October 21, 1982.

3. F. Bleich, *Buckling Strength of Metal Structures*, McGraw Hill Book Co., New York, 1952.

4. S. P. Timoshenko and J. M. Gere, *Theory of Elastic Stability*, McGraw Hill Book Co., New York, 1961.

Internal Distribution

1. R. L. Battiste
2. J. J. Blass
3. S.-J. Chang
4. J. A. Clinard
5. J. M. Corum
6. R. M. Davis
7. J. A. Getsi
8-12. R. C. Gwaltney
13. W. R. Hendrich
14. R. L. Huddleston
15. J. E. Jones Jr.
16. J. K. Jones
17. Y. L. Lin
18. C. R. Luttrell
19. J. A. Mayhall
20. J. R. Merriman
21. S. E. Moore
22. R. E. Norris
23. D. G. O'Connor
24. C. E. Pugh
25. W. K. Sartory
26. H. E. Trammell
27. G. T. Yahr
28. ORNL Patent Office
29. Central Research Library
30. Document Reference Section
31-32. Laboratory Records Department
33. Laboratory Records (RC)

External Distribution

34. Office of Assistant Manager for Energy Research and Development, Department of Energy, ORO, Oak Ridge, TN 37831
35. Technical Information Center, DOE, Oak Ridge, TN 37831
36. M. E. Adams, R&D Coordinator, U.S. Army Materials Technology Lab., ATTN: SLCMT-DA, Watertown, MA 02172-0001
37. R. S. Barsoum, U.S. Army Materials Technology Laboratory, ATTN: SCLMT-MS, Watertown, MA 02172-0001
38. R. Becker, ARDEC, ATTN: SMCAR-FSA-F, Dover, NJ 07801
39. G. Bishop, U.S. Army Materials Technology Laboratory, ATTN: SLCMT-MS, Watertown, MA 02172-0001
40. P. Cavallaro, U.S. Army Materials Technology Laboratory, ATTN: SLCMT-MSR-MS, Watertown, MA 02172-0001
41. M. Chan, ARDEC, ATTN: SMCAR-FSA-F, Dover, NJ 07801
42. P. C. T. Chen, U.S. Army Armament RD&E Center, Bénet Laboratory, B-115, Watervliet, NY 12189-4050
43. G. Conlon, Bénet Laboratory, ATTN: SMCAR-CCB-SE, Watervliet, NY 12189-5040
44. W. Crenshaw, U.S. Army Materials Technology Laboratory, ATTN: SLCMT-MI&SL, Watertown, MA 02172-0001
45. J. Deluca, U.S. Army Materials Technology Laboratory, ATTN: SLCMT-OMC, Watertown, MA 02172-0001
46. K. Dennis, Cpt U.S. Army West Point, Department of Mechanics, West Point, NY 10996
47. F. Diorio, ARDEC, Dover, NJ 07801
48. J. Dolowy, DWA Composite Spec., Inc., 21119 Superior Street, Chatsworth, CA 91311
49. S. G. Floroff, ARDEC, ATTN: SMCAR-FSA-F, Dover, NJ 07801
50. J. Frankel, Bénet Laboratory, Watervliet, NY 12189-4050

51. G. Friar, Bénet Laboratory, ATTN: SMCAR-CCB-RT, Watervliet, NY 12189-4050
52. A. G. Galaitsis, BBN Laboratories, 7 Burroughs Road, Lexington, MA 02173
53. K. R. Gandhi, U.S. Army Materials Technology Laboratory, ATTN: SLCMT-MSR, Watertown, MA 02172-0001
54. B. M. Halpin, Jr., U.S. Army Materials Technology Laboratory, ATTN: SLCMT-OMC, Watertown, MA 02172-0001
55. N. J. Huffington, Jr., U.S. Army Ballistic Research Laboratory, Aberdeen Proving Ground, MD 21005
56. A. R. Johnson, U.S. Army Materials Technology Laboratory, ATTN: SLCMT-MSR, Watertown, MA 02172-0001
57. D. Kiernan, U.S. Army Materials Technology Laboratory, ATTN: SLCMT-OMC, Watertown, MA 02172-0001
58. J. Lesko, Cpt. U.S. Army Materials Technology Laboratory, ATTN: SLCMT-MS, Watertown, MA 02172-0001
59. D. Lighton, U.S. Army Missile Command, ATTN: AMSMI-RD-ST-SA, Redstone Arsenal, AL 35898-5247
60. N. Lionette, ARDEC, ATTN: SMCAR-FSA-F, Dover, NJ 07801
61. F. A. McLaughlin, ARDEC, Dover, NJ 07801
62. K. Miner, Bénet Laboratory, ATTN: SMCAR-CCB-RT, Watervliet, NY 12189-4050
63. R. S. Munn, Naval Underwater Systems Center, Code 44, New London, CT 06320
64. R. B. Murray, U.S. Army Ballistic Research Laboratory, ATTN: SLCBR-IB-M, Aberdeen Proving Ground, MD 21005
65. R. Nitzsche, ARDEC, Dover, NJ 07801
66. T. O'Brien, Bénet Laboratory, ATTN: SMCAR-CCB-RT, Watervliet, NY 12189-4050
67. P. O'Hara, Bénet Laboratory, ATTN: SMCAR-CCB-RA, Watervliet, NY 12189-4050
68. D. W. Oplinger, U.S. Army Materials Technology Laboratory, ATTN: SLCMT-MS, Mechanics & Structural Integ. Lab., Watertown, MA 02172-0001
69. E. M. Patton, U.S. Army Ballistic Research Laboratory, Aberdeen, MD 21005
70. G. J. Piper, U.S. Army Materials Technology Laboratory, ATTN: SLCMT-MRS-MS, Watertown, MA 02172-0001
71. A. Tessler, U.S. Army Materials Technology Laboratory, ATTN: SLCMT-MS, Watertown, MA 02172-0001
72. P. Tong, U.S. Department of Transportation, TSC/DOT Kendall Square, Cambridge, MA 02142
73. T. Tsui, U.S. Army Materials Technology Laboratory, ATTN: SLCMT-MS, Watertown, MA 02172-0001
74. J. H. Underwood, U.S. Army Armament RD&E Center, Bénet Laboratory, Watervliet, NY 12189
75. A. Wakulenko, Bénet Laboratory, ATTN: SMCAR-CCB-SE, Watervliet, NY 12189-4050
76. M. D. Witherell, Bénet Laboratory, Watervliet, NY 12189-4050