MARTIN MARIETTA ENERGY SYSTEMS LIBRARIES

3 4456 0278649 3

ORNL/TM-10385

MARTIN MARIETTA

Machine Readable Identification Systems—An Overview

Fred J. Smith
Stanley Cantor

OAK RIDGE NATIONAL LABORATORY
CENTRAL RESEARCH LIBRARY
CIRCULATION SECTION
4500N, ROOM 175
LIBRARY LOAN COPY
DO NOT TRANSFER TO ANOTHER PERSON
If you wish someone else to see this report, send in name with report and the library will arrange a loan.

OPERATED BY
MARTIN MARIETTA ENERGY SYSTEMS, INC.
FOR THE UNITED STATES
DEPARTMENT OF ENERGY

Printed in the United States of America. Available from
National Technical Information Service
U.S. Department of Commerce
5285 Port Royal Road, Springfield, Virginia 22161
NTIS price codes—Printed Copy: A03; Microfiche A01

This report was prepared as an account of work sponsored by an agency of the United States Government. Neither the United States Government nor any agency thereof, nor any of their employees, makes any warranty, express or implied, or assumes any legal liability or responsibility for the accuracy, completeness, or usefulness of any information, apparatus, product, or process disclosed, or represents that its use would not infringe privately owned rights. Reference herein to any specific commercial product, process, or service by trade name, trademark, manufacturer, or otherwise, does not necessarily constitute or imply its endorsement, recommendation, or favoring by the United States Government or any agency thereof. The views and opinions of authors expressed herein do not necessarily state or reflect those of the United States Government or any agency thereof.

ORNL/TM-10385

MACHINE READABLE IDENTIFICATION SYSTEMS - AN OVERVIEW

Fred J. Smith
Stanley Cantor

Date Published: September 1987

Report prepared for
Naval Aviation Logistics Center
of U. S. Navy
Under Interagency Agreement 1363-1363-A1
and
Installation & Logistics Department
of the U. S. Marine Corps
Under Interagency Agreement 1214-1214-A1

by

Data Systems Engineering Organization
Data Systems Research and Development Program

at

Oak Ridge National Laboratory
Oak Ridge, Tennessee 37831
operated by
MARTIN MARIETTA ENERGY SYSTEMS, INC.
for the
U. S. DEPARTMENT OF ENERGY
Under Contract No. DE-AC05-84OR21400

MARTIN MARIETTA ENERGY SYSTEMS LIBRARIES

3 4456 0278649 3

TABLE OF CONTENTS

Page

Abstract..... V

Introduction..... 1

Overview of Non Bar Code Systems..... 2

Optical Character Recognition..... 2

Magnetic-Strip Technology..... 2

Magnetic-Ink Character Recognition..... 3

Bar Code Systems..... 4

Technical considerations..... 8

Printers..... 10

Readers..... 10

Decoders..... 11

Bar Code Applications..... 12

Bar Code labeling techniques for use in Life-Cycle Tracking..... 15

Advanced Identification Systems..... 17

Identification of Etching on Metal Parts via Infrared Sensing..... 17

Large-Memory Media:"Smart Cards; Optical Memory Cards..... 18

Smart Cards..... 18

Optical Memory Cards..... 21

References..... 24

ABSTRACT

The application of automated identification of an item by the use of machine readable methods is improving the accuracy and speed of data capture. Bar codes, optical character recognition, magnetic strips, and magnetic-ink recognition are all current machine readable methods which are used for data collection. Bar code data collection is designed for repetitive identification of large numbers of items, locations, people or procedures in an active environment. It is the most used technology for real time inventory control, tracking, and point of sale applications. Magnetic strip coding is used for highly compact data identification on ID cards and on tags; the density of stored information can be greater than on bar codes and it has the added capability for updating the recorded information. However, magnetic code-identifiers are generally more expensive and may be degraded by stray magnetic fields. Optical character recognition is generally used today to capture documents for computer storage and recall. It has seen limited use for product identification in the retail sales industry. Magnetic-ink character recognition, though used widely in banking, has limited applications elsewhere owing to inherent limitations in the number of characters and in the sensing equipment.

Bar code methods are currently experiencing a faster rate of growth than are the other technologies mentioned above. The emphasis of this paper is on bar coding because of its popularity. The fundamentals of bar coding are discussed and labeling and scanning techniques are presented. Bar-coding shows the most promise of the currently available techniques for labeling an item that may be exposed to harsh environments during its life-cycle. In many applications this includes labeling items that will be subjected to abrasion, exposed to corrosive and/or dirty, oily environment, and/or will experience high temperatures (e.g., jet-engine combustion chambers).

New, automatic data-collection techniques are being developed, utilizing microcircuits and compact-disk memory media. The greatly increased memory capacity of these systems will likely lead to identification in terms of definitive characteristics of the item.

INTRODUCTION

There is a need for information to be more timely and more accurate than ever before. The intent of this paper is to provide a general survey of the different methods of labeling an item in such a way that it can be identified by an instrument (machine) in an automatic fashion. Included will be a discussion of the advantages and disadvantages of each of these machine readable methods, the types of equipment used and areas of application. An important consideration will be how well an identifier can survive under harsh environmental conditions. Automatic data capture using machine readable information improves efficiency, reduces data processing time and costs, eliminates excess handling thus reducing human error, and diminishes the problems of paper recorded information.

Machine readable information systems now allow factory workers and clerical personnel to quickly and accurately provide needed information at every strategic point during production, distribution, and sales.

To facilitate the management of inventory, as well as to track the maintenance and reliability of components or parts, automatic data capture techniques, which remain functional throughout the life cycle of the components or parts, are being developed.

The word identification as it is used in this paper may be defined as:

> a description and/or representation of one or more definitive characteristics of an inanimate object or living thing along with other data of interest such as time, location, and event.

Using this definition, we can arbitrarily divide machine readable identification systems into two general categories:

(1) small memory systems, used mainly to represent a limited number of definitive characteristics. These systems include:

a) bar codes - data encoded in alternating light and dark bars of varying thickness.

b) optical character recognition - machine identification of alphanumeric characters

c) magnetic ink recognition - use of a special ink to print numerical data which becomes magnetic upon passing through a magnetic field and then can be identified by the resulting magnetic pattern.

d) magnetic strip - A coded message is programmed onto a strip of magnetic film attached to a special card.

(2) large memory systems (microcircuits, optical memory cards) which are (or can be) used to describe and represent a large number of

definitive characteristics as well as other data; with optical memory cards the storage capacity is so great that the description of definitive characteristics can encompass the origin, function, and nature of the item or individual; also, the listing of events associated with the item or individual can be virtually limitless.

OVERVIEW OF COMMERCIALLY AVAILABLE NON-BAR-CODE SYSTEMS

In this section we discuss three types of systems: Optical Character Recognition; Magnetic-Stripe Technology; Magnetic-Ink Character Recognition.

Optical Character Recognition:

Optical Character Recognition (OCR) is the process by which printed characters are machine-read by means of electro-optical instruments. In OCR, the characters to be read are arbitrarily divided into small areas, commonly called pixels.[1,2] The light reflected from an illuminated pixel is sensed by a phototransducer. A particular character is identified by matching the characteristic bit map or shape pattern of ink-containing and non-ink-containing pixels.

One of the principal advantages of the OCR technique is that the human eye and the scanning device recognize the same symbol. Therefore, no printing redundancy is required to satisfy each on an independent basis. Also, many printing techniques are available to produce OCR documents. Included are typewriters, serial impact, and dot matrix printers as well as various printing press processes. Thus, the end user has a great deal of flexibility. Characters can be encoded with a density of 10 characters per inch.[2] The encoded data can be scanned in either direction: a right to left or left to right.

The main disadvantage of OCR is that the physical size and shape of each character must be very precise.[2] OCR characters must be horizontally and vertically printed to satisfy very rigid specifications. Another disadvantage to OCR is that scanning with hand held devices is relatively difficult; operators must keep the scanner very straight. Even a small deviation can lead to a misreading. The longer the data field, the more difficult it will be to retain operator efficiency. Difficulties in discriminating between similar characters (like D and O) lead to an error rate of approximately one error for every 10,000 characters read.[2] Although this error rate is certainly less than would be the case for manual data entry, it is greater than for other automatic systems.

The retail sales sector has been the largest user of hand held OCR scanners. However, success has been limited. Most users of this technology are now examining other alternatives. One of their key objectives is to implement a coding system that is considerably more "user friendly."

Magnetic-Stripe Technology:

In some regards magnetic-stripe recording is conceptually similar to bar codes. The magnetic strip contains magnetic areas structured against non-magnetic backgrounds analogous to black bars on white backgrounds.[1] In both cases information is recognized by the locations on recording media where there are either magnetic flux or black/white color changes. Just as with bar codes, information is recovered from magnetic stripes by sweeping read heads across coded surfaces and converting positional information into pulse-width modulated voltages. There is no inherent first read rate or substitution error rate difference between the two technologies.[1]

Because magnetic materials are more homogeneous than most printing materials, information can be packed more densely on magnetic stripes than bar codes can be printed on conventional papers.[1] The encoded data field can be scanned in either a right to left or left to right direction.

The magnetic sensing elements used in the read units have a very small depth of field.[3] This means that the scanning device must be in surface contact, or near surface contact, with the encoded data. This limitation precludes many applications that require the scanning of objects at a distance of several feet. For example, industrial applications that require the automatic tracking and distribution of cartons on conveyor lines cannot effectively use magnetic-stripe systems. Magnetically encoded media are also considerably more expensive than the paper media that can be used with competitive technologies.[3]

Magnetic-Ink Character Recognition:

Magnetic-ink character recognition (MICR) is used almost universally by banks for rapid sorting and recording of checks, deposit slips, and other transaction documents. The process uses a stylized numerical font and a special oxide ink for printing the customer's account number, the bank in which the account is held, and other coded data; the ink can take and hold a magnetic "charge" when passed through a magnetic field.[1] Each printed numeral is sensed by a reading head in the processing machine. The signal from the reading head can trigger the sorting mechanism in the processor, and can also be used to punch cards, write on magnetic tapes or disks, etc. The qualities of MICR which make this system especially attractive for banking are as follows:

"The magnetic-ink character reading system is secure against most of the common types of defacement. Overprinting, dirt, or writing across the numbers causes no trouble. Embossing, for example, by a ballpoint pen, causes no difficulty, nor does wrinkled or sharply creased paper. Even though during the reading process close contact with the read-head is desirable, a layer of transparent adhesive tape over the numbers does not prevent desirable results. This means that torn checks can be repaired without detriment to the reading system. Imprinting with magnetic ink is highly durable and can withstand thousands of transits across the read-head with no impairment of the signal." (quoted from ref.4, pp. 146-147)

The main disadvantages of MICR are: (1) the highly stylized font required to ensure character discrimination, (2) limitation to numbers and only about four other characters, (3) difficulty in scanning with hand held devices, and (4) a very shallow depth of field.[3]

BAR CODE SYSTEMS

Bar code systems are rapidly becoming the most widespread machine-readable identification techniques available for inputting data directly into computing systems. Most individuals encounter bar coding only in local supermarkets. However, bar-code systems are used for many other businesses, improving the data collection process by simplifying data collection procedures and increasing the accuracy of the data collected. To promote greater efficiencies in certain business operations, the U. S. Department of Defense (DOD) issued MIL-STD-1189 (in 1982) requiring a bar-code label on all items shipped to the U. S. Department of Defense; this may effect as many as 50,000 companies acting as suppliers.[5] The auto industry, in 1983, joined forces to standardize bar-code labels on every item moved between organizations in their environment, a decision involving at least 25,000 companies.[6]

Bar Codes represent a true machine language. They are a printable machine language that reproduces the ones and zero bit streams that are the basic computer language.[6] A "Bar Code" is nothing more than a group of parallel dark bars of varying widths separated by white spaces. Variations in the width of the bars and the spaces between them are used to encode different information. While many different bar-code formats have been proposed, the only difference between one coding scheme and another is their byte or cipher formats, i.e., the way bits are organized into bytes.

Two of the most used codes are "Code 39" (developed by Intermec Corporation) and "United Product Code" (UPC). The characters of code 39 and the UPC are shown in Figs. 1 and 2 respectively. Code 39 can generate 43 different characters: 0-9, A-Z, -, ., $, 1, +, %, and space; an additional common character (*) is used at the start and the end of a bar-code string. Each character in code 39 is made up of nine elements: 5 bars and 4 spaces.

Three of the elements must be wide bars or spaces. The wide bars and spaces encode a "1", while the narrow bars and spaces encode a "0". Each character starts and ends with a bar. Code 39 has been adopted for use by the Department of Defense.

The UPC coding logic utilizes bars and spaces whose widths are one, two, three, and four times the width of the basic element (See Fig. 2.). The UPC coded message is represented by a bit stream where each elemental space is a "0" and an elemental bar is a "1". Each character is formed by ciphers of two bars and two spaces, where the total number of elements used is always seven. The UPC format is limited to 12 ciphers (characters) divided into two halves of 6 ciphers each where the right hand cipher will have odd parity and the left even parity. The UPC will support only numerical characters 0 through 9.

Each bar coding format has its pros and cons. It is difficult to discuss the advantages and disadvantages of bar codes without discussion of a particular code; however, some of the general advantages are:[3,5,6]

(1) Bar codes are machine language, therefore, facilitating "communicating" with digital computers networks, and database management systems.

(2) Codes can be fully alpha/numeric in addition to other special characters. The result is flexibility in accord with existing database systems.

(3) When scanning bar code, the chances of an erroneous character being entered is very low (less than 1 in 10^6).

(4) The encoded data filed can be scanned in either a right to left or left to right direction from distances varying from inches to feet. The benefit, for example, is the ability to have a fully automated tracking and sorting system. Also, variable densities can be employed. This becomes significant when trying to condense a lot of data into a small area or when trying to read encoded data several feet from the scanner.

(5) A wide variety of printing techniques can be used, leading to great flexibility in terms of document size, cost, and system interfaces. No special high cost medium is required to encode data. Standard paper stocks can be used for many applications. Scanning devices rank among the least expensive of any technology. Therefore, capital investment is relatively small.

In the past, the main disadvantage of bar codes has been the lack of industry standardization. But the food industries' adoption of the United Product Code has served to catalyze the use of bar codes. The pattern is now being repeated in other industries such as automobile and military suppliers. The other disadvantage sometimes cited for bar codes is that they are not readily readable by humans. This is overcome in many cases by printing both the bar code and standard characters on the labels. (In fact,

ORNL–DWG 87-6626

CHAR	PATTERN	BARS	SPACES
1		10001	0100
2		01001	0100
3		11000	0100
4		00101	0100
5		10100	0100
6		01100	0100
7		00011	0100
8		10010	0100
9		01010	0100
0		00110	0100
A		10001	0010
B		01001	0010
C		11000	0010
D		00101	0010
E		10100	0010
F		01100	0010
G		00011	0010
H		10010	0010
I		01010	0010
J		00110	0010
K		10001	0001
L		01001	0001
M		11000	0001
N		00101	0001
O		10100	0001
P		01100	0001
Q		00011	0001
R		10010	0001
S		01010	0001
T		00110	0001
U		10001	1000
V		01001	1000
W		11000	1000
X		00101	1000
Y		10100	1000
Z		01100	1000
-		00011	1000
●		10010	1000
Space		01010	1000
*		00110	1000
$		00000	1110
/		00000	1101
+		00000	1011
%		00000	0111

Figure 1. Code 39 Character Patterns

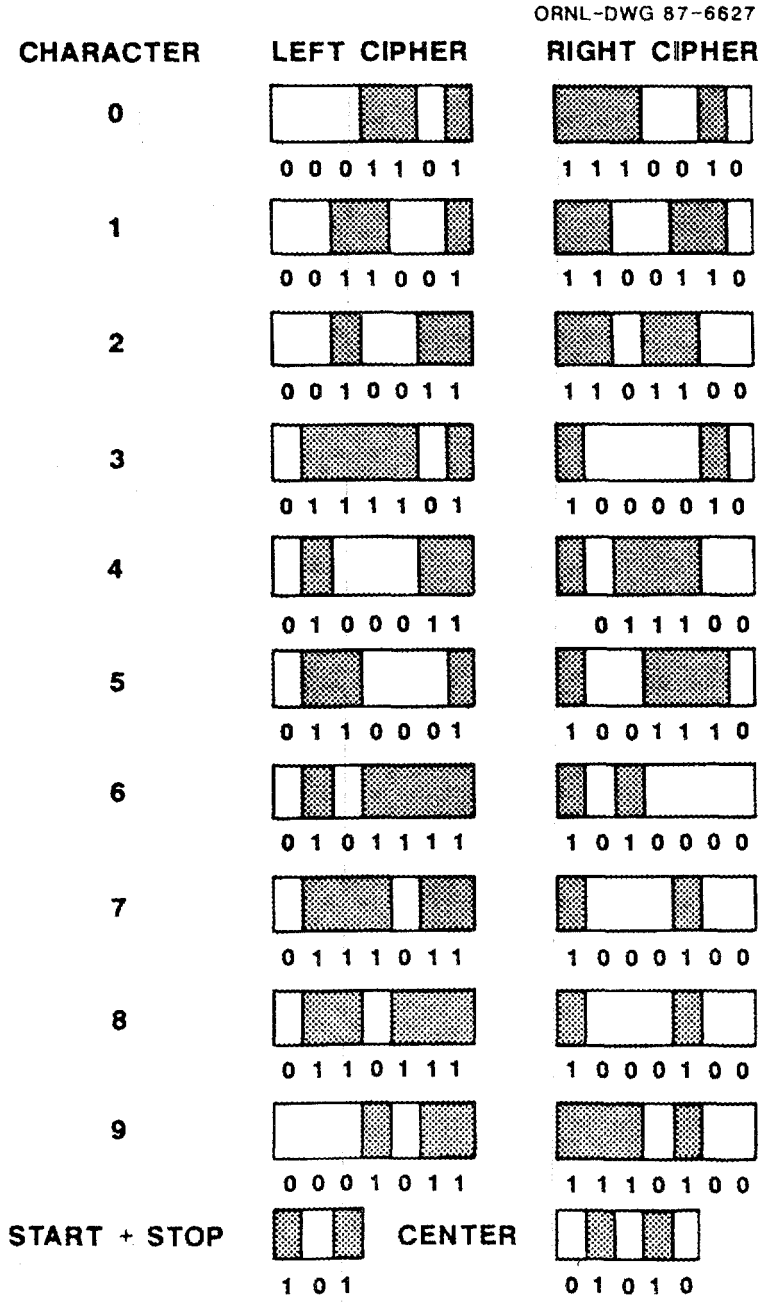

Figure 2. The UPC Character Patterns

MIL-STD-1189 specified that bar codes must have "human-readable interpretation", i.e, alphanumeric characters printed above or (preferably) below the bar code.)

Technical Considerations:

The bar-code scanning process is basically simple. A light beam is shined onto the surface of the encoded media. As this light crosses the printed bars and spaces, the light is either absorbed (by the bar) or reflected (by the spaces) and transmitted back to a "light detector" (See Fig. 3). As the reflected light is detected, an analog signal is generated which is then converted to a square wave pattern of high and low voltages. The square wave pattern is then digitized and decoded using a computer. Fig 3 represents the process of scanning the number "1" in code 39.

The sensing transducers commonly used to detect the reflected light in bar code scanners all have their maximum sensitivity in the red to infrared spectral region (700 to 960 nanometers).[5] It would be ideal if the energy from the light source used to illuminate the bar code peaked at the same frequency as the peak sensitivity of the sensor. It is for this reason that red or infrared light-emitting diodes (LED) and red or infrared lasers are used as the illuminating light.

Most laser scanners used to scan bar-coded messages are based on helium-neon gas which lases at 633 nanometers.[6] If a label is to be both laser-scanned and wand-scanned during various stages of its useful life, a wand should "see" that label in a manner similar to the way a laser views the situation. Considering the variables of ink reflectivities and LED emission efficiencies, plus the constant 633 nanometer laser wavelength, many hand-held wands now on the market operate at around 700 nanometers. While the reflectances of most inks are not exactly the same at both 633 and at 700 nanometers, these wavelengths are close enough to allow reasonably reliable performance.[1]

This leads to the issue of the ink used in printing bar codes. Here the criterion involved in choosing both inks and background material is one of reflectivity. Some inks (and dyes) have low reflectivities (they absorb the illuminating light), whereupon they look like bars (which is the objective), while others have high reflectivities and look like background. Unfortunately, many inks do not absorb red or infrared light. Inks and background must be chosen to maximize the difference in reflectivity in the 633 to 700 nanometer spectral region. An ideal ink should absorb more than 85% of all of the 633-700 nanometer light while the background should reflect 85% of the illuminating light.[5]

A very important factor in bar-code technology is the spot size of the light emitted from the scanner.[3,6] The relationship between the width of the narrowest printed bar or space to the spot of light is the key to successful reading. Both should be approximately the same size. If the light spot is considerably larger, then the decoding process will be

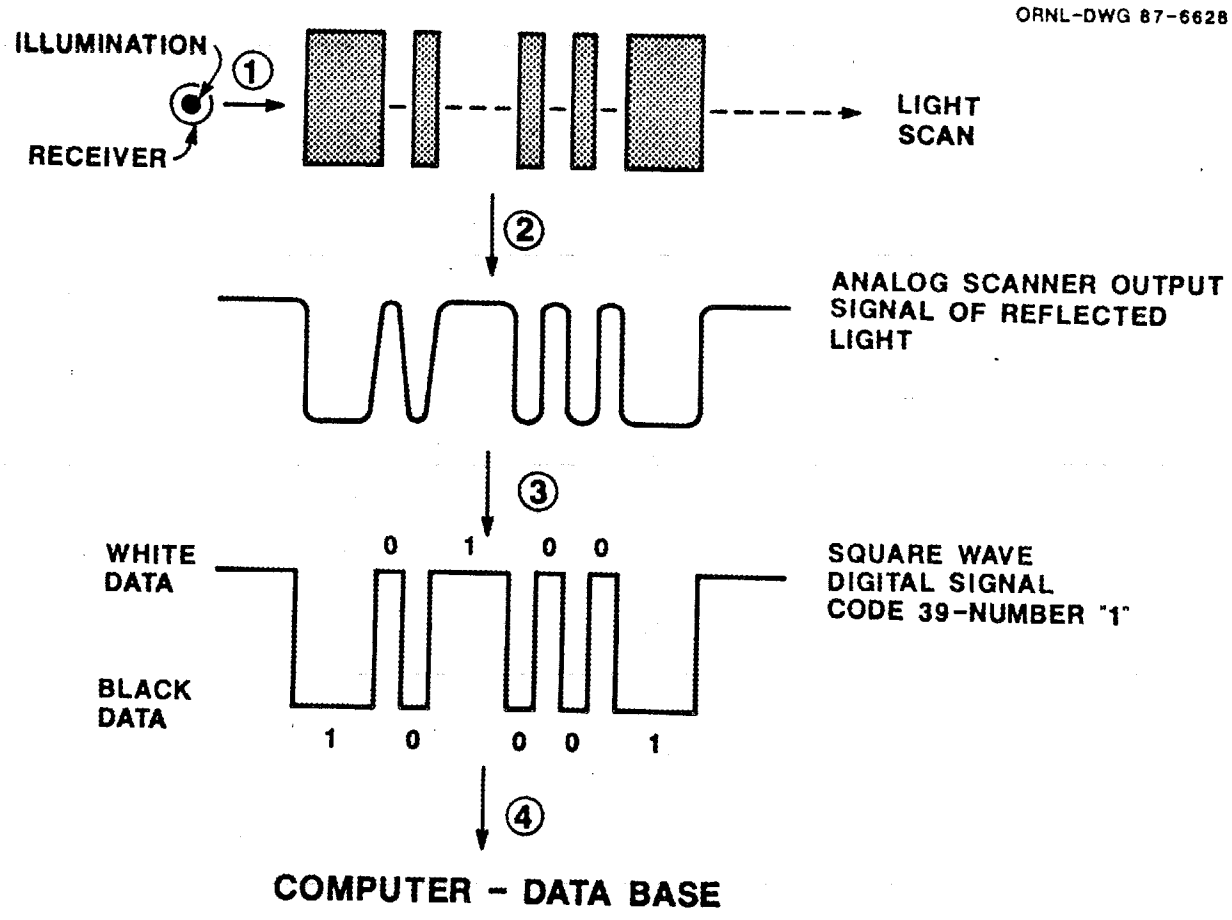

Figure 3. Bar Code Reading System for the Number "1" in Code 39.

distracted by signals from neighboring bars or spaces. If the light spot is too small, voids or specks can cause misinterpretations. Also, the aperture in the wand that accepts reflected light must be no larger than the width of the smallest bar being read. If the aperture is too small, it may detect an ink speck and erroneously report it as a narrow bar.

Printers:

Standard printing and photographic processes can be used to produce high quality bar code labels. Either process can produce small high resolution labels with densities of up to 17 characters per inch.[3] But, there are major cost constraints. The cost for each piece of bar coded media can be quite high unless substantial volumes in single batch sizes are associated with a given production run. Since production is generally not done by the user, long lead times may be encountered and advance planning and coordination are required. Also, the encoded labels must be inventoried and controlled like any other product component adding to the total inventory cost.

Inexpensive dot matrix printers are the most widely used printers[3] in conjunction with bar-code graphics packages. They serve perfectly well for many bar code applications in factories, shops, offices, and stores. It provides for complete document flexibility and can produce full pages of data with graphics and rotated (horizontal and vertical) bar code patterns. Also, small ticket sized media can be printed. However, most dot matrix printers cannot print the high-density (300dpi),high-resolution labels necessary in some applications.[1] Laser printing has not seen large scale use yet, but it meets most of the primary requirements including density, quality, format flexibility, and speed.[4] Unfortunately, laser printing requires capital investment substantially greater than for dot matrix printers.

Readers:

There are two primary types of scanners. These are hand held "wands" and fixed position scanners. The more common type, hand held scanners, are known as "light pens." With properly encoded media successful scanning will usually occur on the first pass. However, if there are a series of voids or specks, then multiple attempts may be required. Light pens have a limited depth of field, typically not exceeding 40 mils (.040 inches).[1,3] The tip of the pen should be off the surface of the encoded media by no more than this distance to achieve successful scanning. This is just enough to provide ease of scanning as well as the ability to scan through protective material such as clear plastic or laminates.

Fixed position scanners commonly use a laser as their light source.[5] Because of the intensity and nondivergent nature of laser light beams, laser light can be used to read bar codes at a distance. For instance, codes in a hazardous area can be scanned through a glass partition. Laser scanners can also "read" through plastic wrap and detect poorly printed bar code more

accurately than hand-held wands. The ability to make many scans (cross through multiple tracks) over encoded media in search of a valid pattern with a single operator motion is a prime feature of laser scanners. The laser scanners used in supermarket checkout lanes make hundreds of scans per second.[1] Also, since the beam is very thin, the height of the bar-code can be very small. Recently, small hand-held laser scanners have been developed and are in common use.[1,5] Generally, the laser scanner is faster than the light pen and can read higher resolution codes. However, laser readers are larger, heavier, and quite a bit more expensive.

Laser scanners have an excellent depth of field. Depending upon the size and density of the bar code, encoded media can be read from very close range (inches) on up to approximately four feet.[3] This makes it very easy for an operator, as well as providing the capability for automatic tracking and sorting systems.

Decoders:

Both wands and laser scanners are connected by cable to a small decoder box which is, in turn, connected to a computer. The decoder box contains electronic controls and converts bar code to ASCII code.[5] Most decoders can read and convert a variety of bar code schemes, such as Code 39, UPC, 2 of 5, and Codabar. The associated electronics on most units also enable the reader to scan code upside down, right to left, or left to right.

Several companies manufacture decoder boxes that plug into the PC's keyboard port and can receive input from both the keyboard and a bar code reader so that data can be inputted alternately from both sources.[5] In many inventory situations there is a need to move around to gather data, in which case a battery-powered, hand-held computer may be called for. After collecting data with the hand-held computer, it can cable the data to a larger computer. Several companies sell bar code readers attached to two-way radio systems, so that bar code data can be transmitted and read instantly by a larger computer.[5]

Once bar code has been decoded to ASCII, the computer can't distinguish it from keyboard data or any other data in the computer system.[1,3,4,5] Any software, such as a database management system, that works with keyboard data will work with bar code data. Specific bar code application will be discussed in the next section.

SOME BAR CODE APPLICATIONS

A number of software packages have been developed and marketed for standard bar code applications. BARSOFT (sold by ASAP Systems, Soquel, Ca.) is a database management system that can be used for inventory control, work tracking, quality control, warehouse and shipment control, and product warranty tracking.[5] Another package is DART 5 (marketed by Hillblom, Los Gatos, Ca.) which can be used for inventory tracking, shop orders, work center scheduling, route control, and shipping.[5]

The Universal Product Code in grocery stores (point-of-sale application) is a particular success.[1,3] Numerous other applications of bar code technology is spread across industry in production and/or information management.[7,8,9] Some specific applications are discussed in the following sections.

Defense Logistics:

In 1976, the Department of Defense (DoD) established a committee called Logistics Applications of Automatic Marking and Reading System (LOGMARS) to study the application of bar-coding to aid in keeping track of the tremendous numbers and varieties of parts and assemblies that the military buys.[5]

In January 1982 LOGMARS issued the technical publication, MIL-STD-1189, defining the standard DoD bar code symbols for marking materiel, containers, and documentation. LOGMARS also revised packaging requirements to include bar code markings on all packages coming into the military stock system. In September 1984, a revised document, MIL-STD-1189A, was issued. These documents specify the 3 of 9 bar code (Code 39 shown in Figure 1 and discussed on pages 5 and 6), with human-readable printed characters appearing just below the bar code, but without the start and stop asterisks.

The application of LOGMARS bar coding technology has been successfully tested in a DoD-wide documentation test that incorporated bar code technology into shipping and receiving documentation.[10]

LOGMARS technology is also used in support of the Maritime Preposition Ships (MPS) Program. Through the use of bar code labels affixed to Principal End Items (PEIs) and containers, the Marine Corps is able to track the movement of equipment for beach/port operations. Labels affixed to the PEIs and containers are scanned each time the equipment changes location. This data is transmitted to a microcomputer, thus providing update data to the Maritime Decision Support System (MDSS).[10]

Two relatively new Marine Corps LOGMARS efforts concern bar coded cloth labels and laser etching of small arms. The cloth labels would be attached to tents, field jackets, cold weather clothing, NBC (Nuclear, Biological,

Chemical) protective gear, etc. The laser-etched system would be used to control and track pistols and other small weapons;* the etched bar code would not be supplemented by human-readable characters.

Management of Work in Progress:

The need for sound, effective work in progress (WIP) planning and management can be addressed by: (a) good forward planning to release work to WIP with all necessary resources; (b) accurate and fast feedback of progress and hold-ups into the forward planning cycle and to trigger corrective action when required.[11] To maximize the accuracy and feedback speed of WIP achievement information, it was necessary to move away from conventional data collection techniques and use machine readable documentation and labeling of WIP. Bar code "point of operation" feedback systems have demonstrated that they can provide a cost effective and resilient means of data capture and the microcomputer can be used to highlight hold ups and delays immediately.[11]

Postal Service:

The U. S. Postal Service has chosen a horizontally oriented clocked code for automated mail sorting. Figure 4 shows an example with the "Bar-Zip" in the lower right hand corner of the envelope. In this application, envelopes move in the direction of their long axis through a sorting system where such movement is referenced to each envelope's lower edge. When the clocked code is used, one photosensor reads the lower clock track as an envelop is moved by a read station, while a second photosensor simultaneously reads the upper information track. A disadvantage of this system is that there is only one shot at reading each Bar-Zip as the envelopes go zipping past. Further, such a Bar-Zip must be printed with fair precision in relation to an envelope's lower edge to be sure that both clock and information tracks line up with their appropriate read heads. Clocked codes such as that used by the postal service are restricted to a few tasks.

*The application of a similar scheme in the civilian sphere might have very important ramifications. One of these could be to deter theft (and subsequent "fencing") of small arms and rifles.

ORNL DWG 87-7167

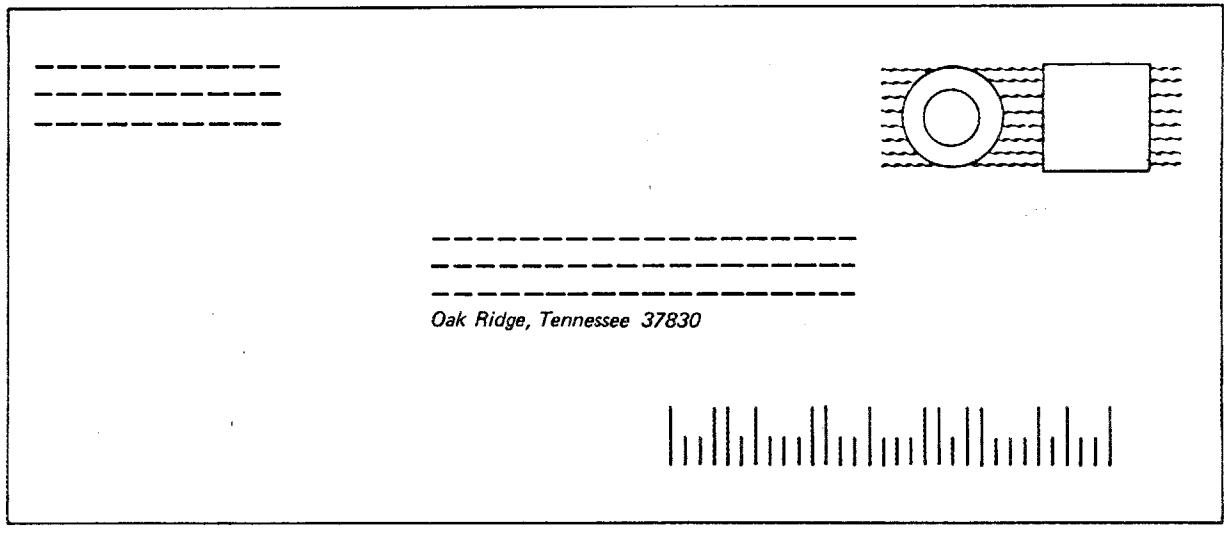

Figure 4. Illustration of U S Postal Service "Bar Zip" System. The clocked bar code in the lower right corner represents the zip code 37830.

Nuclear Industry:

Numerous routine, but crucial, in-service equipment inspections are required at operating nuclear power plants. Data from these inspections must be collected and reduced to a permanent record status in a timely manner. One example is Wyle Laboratories TRISIC-PLUS System.[12] This system combines a database management system for TRacking the In-Service Inspection of Components with a bar-code data collection unit. During a typical application of this system the examiner utilizes a portable, environmentally-sealed data collection unit in the field which provides visual prompts and allows visual inspection results to be entered via bar code laser scanner and alphanumeric keyboard entry. The examiner first confirms the identification of the part by using a laser scanner attached to the data collection unit to read the bar code symbol tagged to the part to be inspected. The bar code identifies the part to the data collection unit which, in turn, prompts the examiner through the inspection procedure. Examination results are entered by pressing response keys or simply laser-scanning a response menu. Alphanumeric information regarding anomalous conditions or other comments can also be entered via the keyboard. After a series of exams, the results can be automatically transferred to the plant's TRISIC database which is operated on an IBM PC-AT or compatible system. The transfer is accomplished by plugging each data collection unit into the PC's serial port, upon which the database is updated.

Other Applications:

A new application combines bar code labels, polymer chemistry, optics, portable microcomputers, and telecommunications to provide a convenient, reliable method for monitoring thermal history of temperature-sensitive items. Polymers that change color on exposure to different temperature are attached to the bar code label. The spectral changes are observed at the same time that the bar code is read. Previously determined time-temperature tolerance curves are used to calculate the remaining shelf life of the item.[12]

A bar-coded Automatic Tool Inventory Central and Tracking System (ATICTS) has been developed for Todd Pacific Shipyards.[14] The system aids in an efficient flow of tools to the right people at the right time, it expedites tool transfers, and simplifies the monitoring of tool inventories.

BAR CODE LABELING TECHNIQUES FOR USE IN LIFE-CYCLE TRACKING

A primary benefit of automatic identification systems is timely, accurate data capture. To facilitate the management of inventory, to track the maintenance, as well as to monitor the reliability of components or

parts, it is desirable to have bar code labeling systems which are functional throughout the life-cycle of the component or part. In many applications this includes items that have been subjected to abrasion, exposed to corrosive and/or dirty oily environment, and/or experienced high temperatures. A specific example might be the combustion chamber of a Naval jet engine which may have sustained temperatures up to 1100°C as well as having been exposed to a salt water mist.

For optically read systems the utility of a bar code message is determined by the bar space contrast ratio. Most systems require maintaining a difference in reflectivity of at least 40%;[1] this is referred to as the "print-contrast ratio." Depending on the environment where the part or component is used, the label material and printing methods will vary. Paper and ink labels are limited to temperatures below about 45°C.[3] With a clear plastic laminate covering, the label can be protected from dirt and grease. Bar code labels, impact-printed on a polyester material, have been used in nuclear power plants where they were exposed to high humidities as well as to temperatures of about 100°C.[12] Pre-fabricated, bar-coded metal tags are made by The Pannier Corporation (451 Pannier Building, Pittsburgh, PA 15212)[15] for a variety of industrial applications: steel tags for general purpose application where the temperature does not exceed 250°C; aluminum tags for corrosion resistance; and "heat resistant" stainless steel tags for applications up to 1093°C (2000°F).

According to the Pannier Corp., the coated aluminum tags have good corrosion and chemical resistance;[15] these tags showed good resistance to oil, but only moderate resistance to gasoline. Independent testing led to the following results:[15] the tags, after 800 hours exposure to simulated outdoor conditions (ultraviolet irradiation and 40-50% relative humidity), showed only slight darkening of its white background; when exposed for 720 hours to a 5% salt spray solution, the coating could be scratched with a fingernail and the ink was slightly lighter but the label was still legible; twenty (20) temperature cycles of 20 hrs at 150°C followed by 4 hrs at -40°C produced only a slight darkening of color.

A white ceramic-coated stainless steel tag has been developed by Pannier Corp. specifically for high temperature applications, with the bar code impact-printed with special ink stated by Pannier to be good to 1093°C (2000°F).[15] Tests were conducted at ORNL by placing a bar-coded tag in a bench-scale laboratory oven. At 500°C (932°F), the tag showed only a slight darkening of the white coating after 10 hrs. However, at 1093°C (2000°F) the tag failed after only 2 hrs. The "heat resistant" stainless tag became brittle and had rolled up at the edges (probably as a result of sintering and crystallization within the alloy). The white coating had darkened to a light tan color and the ink faded slightly. Although the bar code was still legible, it was useless as a machine-readable identifier due to the deterioration of the stainless alloy.

Other solutions to the problem of finding a satisfactory high-temperature-resistant labeling method have been proposed. Laser-etching methods can be used to engrave (print) bar codes on metals.[1] Print-contrast

ratios of 40% may be difficult to achieve, but there are ways around this problem. For instance, bar codes printed on aluminum and steel have been read with off-axis, laser-driven illumination, in instances where their print-contrast ratio would otherwise have been much less than 50 percent.[1]

Another possibility is through the use of mechanical read heads. If the bars of a bar code message are either raised above or engraved below a background surface, an appropriately designed force-sensitive reader will detect the pattern much the same as an optical system does.[1] This technique has been compared to running (banging) a stick along a picket fence.[1] The "picket fence" can be read with units containing piezoelectric or magnetostrictive elements without concern for optical print contrast.[1] Examples of applications of this technique are: bars die-struck on engine blocks, raised-ciphered serial numbers on tire sidewalls, laser engraved tracks, and even printed labels (if the ink is thick enough.)[1]

ADVANCED IDENTIFICATION SYSTEMS

Identification of Etching on Metal Parts via Infrared Sensing:

A new method is under development by Lockheed, Marietta, Georgia, in which an infrared (IR) system reads part numbers etched electrochemically on metal parts.[16] The method, called the Positive Parts Marking System, is reported to be "saving money by reducing labor and material costs associated with constant rematching of parts that have become separated from their paperwork.*" With this system, markings electrochemically etched on aluminum can be differentiated from unetched metal even after parts have been painted and the markings are no longer visible to the unaided eye.

The reading apparatus consists of an infrared (IR) detector, a computer monitor, a coolant (at present, liquid nitrogen) and a table with crosshairs for aligning the part number under the detector. Presumably, the difference in thermal conductance between etched and unetched aluminum, when the part is in contact with liquid nitrogen, is the basis by which the IR sensor detects the difference.

The marking apparatus consists of an electrochemical etching machine, a computer for generating the identification stencils, and a letter quality printer that reproduces the part or reference number on a dye-impression stencil.

As of September 1986, Lockheed was only applying the process (i.e., electrochemical etching and IR identification) to sheet metal parts, but they plan to apply the method to extrusions and to machined parts. Lockheed has applied for a patent on the system.

Large-Memory Media: "Smart" Cards; Optical Memory Cards

This section of the report deals with automatic identification systems with large memories thereby permitting much more description of definitive characteristics and historical (events, times, locations) data of an item or an individual.

"Smart" Cards[17,18,19]

A typical "smart" card is a conventional credit card with a wafer thin one-inch diameter silicon integrated circuit embedded in the plastic (see Fig. 5). Smart cards can be divided into two catagories: storage only cards, and storage plus logic cards. Currently, 80 percent of all smart cards produced are for information storage only. This type of smart card uses the chip solely to store information. The storage plus logic combines storage with a microprocessor and program steps so that the card can communicate with another microprocessor in an electronic interface device, such as a point-of-sale terminal. The integrated circuit has three parts:

(a) a microprocessor which executes programs to monitor the use of memory, authenticate users and validate transactions;

(b) a memory (for data storage) with two main security features: (b.1) no external paths to the memory; (b.2) EPROM (erasable programmable read-only memory) with floating gate circuitry; attempts to read the memory (say, with an electron microscope) will discharge the floating gate, thereby clearing the memory; the chip also contains two other types of memory: a non-volatile read only memory (ROM) containing the operating system and other permanent information; a volatile random access memory (RAM) used for storing intermediate results of calculations by the central processing units.

(c) a system interface through which power is provided and data is transferred when the card is inserted into a reader. The reader provides the physical and electrical contact for the read/write function. It serves as a communication link between the card and a controller (personal computer, dedicated computer, etc.).

Placing the integrated circuit (chip) in the upper left hand corner allows the combination of the new smart or chip technology with the more conventional technology of magnetic stripe and embossing. The chip is on an area of the card that is stressed less frequently. More than one chip could be used but putting two chips in a setting that endures as much physical stress (bending, torque, extreme temperatures and spilled liquids) as a credit card does would more than double the chances of failure. The electrical connector between the chips would be especially vulnerable. The environment in which the smart card's microcircuitry must operate places very tight constraints on the chip design. First, the embedded chip must be thinner than standard silicon chips, 0.011 inch as compared to 0.015 inch.

ORNL-DWG 87-13670

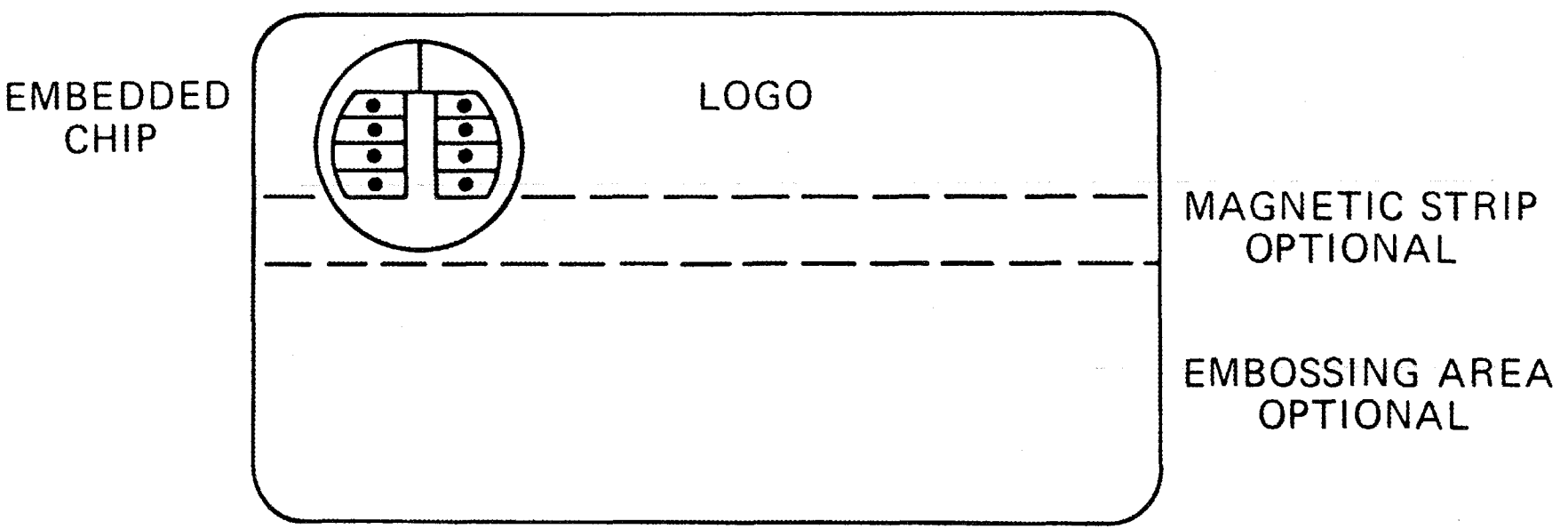

Figure 5. Smart Cards; standard credit card size cards which contain an embedded chip. The chip contains a microprocessor and several kinds of memory. The chip communicates with other machinery through eight metal contacts on the front of the card. Magnetic strips and embossing can be used along with the chip if desired.

Second, the area of the chip should be as small as possible to minimize physical stress when the card is bent. Third, the chip should be able to operate in an electronically "noisy" environment: for example, a credit card must be able to function even when it is near other electronic devices such as cash registers. Fourth, it must use as little power as possible and fifth, it should be inexpensive to manufacture.

The microcircuit in today's smart cards have a memory of 8 kilobytes, over 50 times the memory capacity of standard magnetic stripe cards.

Smart cards may become common in the very near future. Mastercard is testing them in pilot programs in Columbia, Maryland, and in Palm Beach, Florida as successors to conventional magnetic stripe cards. The testing has focused on potential applications as fraud-proof credit cards or personal-entry keys to electronic cash networks.

Another trial application area has the noble purpose of reducing governmental paperwork and red tape. U. S. farmers fill out (and the U. S. Department of Agriculture processes) some 400,000 six-part forms per year. To test a way of reducing this burden, the U. S. Department of Agriculture has distributed smart cards to 300 peanut and tobacco farmers in three Georgia counties to simplify two things: rapid information exchange between buyers, sellers, and Federal offices administering loan and subsidy programs; automatic updating of information as deals are struck.

In this pilot study, each time a farmer delivers a load to market, he inserts his own smart card into a reader on a personal computer, itself connected to a central processing mainframe. The farmer keys in his secret identification code and tells the computer how much produce he is delivering. The PC records the transaction, updates the data on the smart card, and transmits its own store of information to Washington once a day. Federal records can thereby be checked against data stored on the smart cards when they are relinquished at the end of the harvest season; the farmer can scan his own records at any time he has access to a PC. If the trial proves successful, it could lead to a distribution of smart cards to 50,000 peanut and tobacco farmers and perhaps half a million more later on.

For military logistics applications, the use of microcircuits is in an early (conceptual design) stage. (As would be expected, the program already has an acronym, MITLA, which stands for Microcircuit Technology in Logistics Applications.) An obvious logistics application that would use currently available smart-card technology would be in the tracking of materiel. One can imagine smart cards attached to equipment assemblies (such as aircraft engines) as a substitute for log books.

A not-so-obvious application would be in conjunction with new-generation automated test equipment (ATE). Present ATEs are single purpose, i.e., a different ATE is used for checking printed circuit boards in communication gear, in tanks, in artillery, in air-defense systems and so forth; projected ATE would be used for testing circuit boards across many weapons systems. In this application, the microcircuit identifier would be attached to the circuit board and the read/write unit would be part of the ATE.

Thus far, an impediment to more wide scale use of 8k-bit smart cards has been their production cost, currently about $5 per card (versus $0.50 per card for the conventional magnetic stripe card). However, Mastercard is confident that with mass production, the cost will decrease to $1 per card.

Optical Memory Cards[20]

In this section we discuss a system whose function goes beyond the storage and retrieval of identification information; indeed, the main function is in the distribution of information. The system is based on a plastic card holding a stripe of optically reflective material (similar to that on a compact disk) through which one can store and distribute digital information such as numerical data, text, graphics, and voice. The stripe is composed of metal reflective layers into which digital information os burned with a laser. Cards are currently available with typical storage capacities of 1 or 2 megabytes (2MB).* The present design is for spots or pits on the optical surface to be 5 microns in size, but the spot size in the future will be decreased to 3 microns, thereby yielding more than 10MB capacity. To reiterate, this massive storage capacity is (or will be) held on a wallet-sized plastic credit card.

*This much memory on a wallet-size card is truly impressive. Two MB capacity would correspond to about 600 single-spaced typewritten pages, 40 lines per page, 70 characters per line, 10 bits per character, including 2 for "overhead" (start, stop, checking, and other control purposes).

The media for optical memory cards is manufactured exclusively by the Drexler Technology Corporation (2557 Charleston Road, Mountain View, CA 94043 (415/969-7277)). Drexler markets the cards under the trademark, LaserCard. The company has concentrated its resources on the development and large scale manufacturing of the media itself and invested only so far into the development of user hardware and systems to demonstrate the media's potential and to attract licensees. As of mid-1986, there were 22 LaserCard licensees, half being Japanese companies (including some high-tech giants: Canon, Sharp, Toshiba, Matsushita); there are 4 U. S. licensees: Honeywell, NCR, Wang, and Blue Cross of Maryland.

All optical memory cards are preformatted by Drexler whether or not they are prerecorded. User equipment is expected to be of three types:

(a) readers which simply retrieve prerecorded data; these would be relatively inexpensive, as low as $200; such readers would have either a halogen lamp or high-intensity LED light source with either a photodetector or a charge-coupled device (CCD) array; this equipment would be capable of reading entire tracks one at a time, and would almost certainly be connected to a computer,

(b) simple read/write equipment for encoding unique data onto each card; this equipment would cost $500-$1000 and would include a 5 milliwatt semi-conductor diode laser operating in a direct-read-after-write (DRAW) recording process, (in fact, Canon will supply up to 60,000 read/write units to Blue Cross of Maryland for $41.3 million, indicating that the average cost to Blue Cross will be very close to $700 per unit),

(c) equipment for making low volume duplicate cards which in turn would be used to produce under-500 copy runs of publications with quick turn around and complete data input security; such equipment is expected to cost $10,000 or more.

The application areas under development by LaserCard licensees encompass:

1. publishing/education/software
2. office automation
3. medical information systems (especially personal medical history and types of insurance benefits authorized)
4. cashless transactions
5. government/defense (listed for Elbit Computers Ltd, an Israeli firm)

Another application, not presently being developed, but in a conceptual stage, would be a "super" driver's license. Besides the conventional identification information (including photo) the super license might contain (to quote two Drexler employees, R. B. Barnes and L. J. Kilty, from a presentation they made to the American Association of Motor Vehicle Administrators at the International Driver License/Driver Control Workshop, Reno, Nevada, March 1986) "a portable and personal database segmented into independently secure digital files dedicated to specific issues of interest. These might include:

Emergency Medical Information
Other Biometric Identifiers as required
Additional Family Member Identification (Spouse, Children, Other Dependents)
Information Relating to Elderly/Handicapped Drivers
Automobile Insurance Information

Personal Driving History
Welfare Benefits Authorization
Other State Benefits Authorization".

Transponders and Surface Acoustical Wave Device[16,21]

Radio frequency transponders (RFT) and surface acoustical wave (SAW) systems are similar in function and applications to the "Smart" cards. They are small credit card size devices containing microchips which are powered by external radio frequency transmission or surface acoustical waves.

Central to the RFT is an integrated circuit encased in a card (or tag) and capable of storing 8 kilobytes of information. In SAW the information is stored in a lithium niobate crystal. The amount of information is limited to only 10 bytes in SAW systems. Both types of cards contain an antenna which absorbs energy when exposed to a radio-frequency transmission (in the case of RFT) or a surface acoustical wave (in the case of SAW). This energy is used to power the cards which then transmit a signal. The coded information carried in the signal is received and deciphered by a reader-decoder. The cards can be read at distances of several feet. In addition the RFT cards can be fitted with read/write capabilities. Because the cards do not have to be seen or physically contacted to transmit data, RFT and SAW are suitable for applications in which the cards may become coated with dirt, grease, or paint. Both RFT and SAW are relatively expensive among the automatic identification technologies. At present, their high cost currently limits these devices to special applications such as automotive body and paint shop carriers, rail cars, and over-the-road trailers.

References

1. Burke, H. E., Handbook of Bar Coding Systems, Van Nostrand Reinhold Company, N. Y., N. Y., 1984.

2. "Optical Character Recognition," Auerbach Publishers, N. Y., N. Y., 1971.

3. Meyers, R. B., "Bar Code for Industrial Systems," Bar Coding Seminar Proceedings, Published by American Production and Inventory Control Society (1983), pp. 28-39.

4. Wilson, R. A., "Optical Page Reading Devices" Reinhold Publishing Corporation. London, U.K. (1966), pp. 146-147

5. Pilgrim, A., "Bar Code Bonanza," PC World, 3, pp. 198-207 (1985).

6. Brooks, R. W., "Bar Coding - An Overview," Bar Coding Seminar Proceedings, Published by American Production and Inventory Control Society (1983), pp. 1 - 8.

7. Rahn, E., "Bar Codes for Libraries," Libr. Hi Tech, 2, pp. 73-77 (1984).

8. Kom, D., "Bar Codes in Production Control," Manuf. Chem., 55, pp. 38-39 (1984).

9. Fetter, J., "Use of Bar Codes Technology in Production Oriented Applications," Product. Invent. Manage, 25, pp. 1-20 (1984).

10. "LOGMARS", MC Logistics Newsletter, 25 (1986), Published by Marine Corps Logistics Base, Albany, Ga.

11. Pinwell, D. A., "Computer Control of Work in Progress," Proceedings of Computer Aided Production Management Conference, Wembly, London, U. K., April 30, 1985.

12. Griffiths, G., and Coffey, R., "The Use of Computerized Bar Code Data Collection Systems in Plant Systems Status Monitoring." American Nuclear Society Maintenance Conference, Salt Lake City, March 1986.

13. Fields, S. C., "Computerized Freshness Monitoring System," American Institute of Chemical Engineers 1985 Annual Meeting, Chicago, Ill., Nov. 10-15, 1985.

14. "Systems Eases Inventory Maintenance for Shipyard," Computerworld, 18, pp. 60,62 (1984).

15. Personal communication and Product Information sheets supplied by the Pannier Corporation, Pittsburgh, Pa.

16. "Parts Identification Improved with System of Electrochemical etching," Industrial Engineering, September 1986, pp 93-4.

17. "The intelligent manager's guide to smart cards." International Management, McGraw Hill Company.

18. Micro Card Technologies, Inc., Dallas, Texas 1985, marketing literature obtained from Major R. Maestas and Mr. D. Mathews, USMC Headquarters, Installation and Logistics Department, Washington, DC 20380.

19. R. McIvor, "Smart Cards",: Scientific American, Nov. 1985, pp 152-159.

20. J. B. Schwerin, "The Potential Role of Drexon LaserCards in Optical Publishing,: Videodisc and Optical Disk, Vol.5, No.4. July-August 1985, pp 288-292.

21. "Automatic Identification Takes Hold in Manufacturing," Modern Materials Handling, Fall 1985, pp 82-84.

INTERNAL DISTRIBUTION

1-10.	Cantor, Stan	4500N	MS 270
11.	Carr, K. R.	4500N	MS 207
12.	Dailey, George	4500N	MS 230
13.	Doty, Charles	K-1001	MS 170
14.	Duncan, Lynn	4500N	MS 207
15.	Handler, B. H.	4500N	MS 207
16.	Klein, Al	4500N	MS 270
17.	Pfuderer, Helen	2001	MS 050
18.	Phillips, John T.	4500N	MS 181
19-29.	Smith, Fred	4500N	MS 270
30.	Streetman, Kibbee	K-1037	MS 346
31.	Trotter, Ellie	9104-1	MS 001
32.	Twitty, Alice	4500N	MS 207
33.	Warner, J. F.	K-1001	MS 170
34.	Westley, Gary	K-1037	MS 346
35.	White, Archie	4500N	MS 270
36.	Worthington, J. C.	4500N	MS 270
37.	Central Research Library		
38.	ORNL Y-12 Technical Library		
39.	Document Reference Section		
40.	Laboratory Records		
41.	Laboratory Records-RC		
42.	ORNL Patent Section		

EXTERNAL DISTRIBUTION

43. Office of Assistant Manager for Energy Research and Development, Department of Energy, Oak Ridge Operations Office, Oak Ridge, TN 37831

44-74. Technical Information Center