MARTIN MARIETTA ENERGY SYSTEMS LIBRARIES

3 4456 0155140 7

ORNL/TM-10315

ornl

OAK RIDGE
NATIONAL
LABORATORY

MARTIN MARIETTA

Ideal Fluid Properties for Optimizing Absorption Heat Pump Performance

H. Perez-Blanco
M. R. Patterson
J. Braunstein

OAK RIDGE NATIONAL LABORATORY
CENTRAL RESEARCH LIBRARY
CIRCULATION SECTION
4500N ROOM 175
LIBRARY LOAN COPY
DO NOT TRANSFER TO ANOTHER PERSON
If you wish someone else to see this report, send in name with report and the library will arrange a loan.

OPERATED BY
MARTIN MARIETTA ENERGY SYSTEMS, INC.
FOR THE UNITED STATES
DEPARTMENT OF ENERGY

Printed in the United States of America. Available from
National Technical Information Service
U.S. Department of Commerce
5285 Port Royal Road, Springfield, Virginia 22161
NTIS price codes—Printed Copy: A04 Microfiche A01

This report was prepared as an account of work sponsored by an agency of the United States Government. Neither the United States Government nor any agency thereof, nor any of their employees, makes any warranty, express or implied, or assumes any legal liability or responsibility for the accuracy, completeness, or usefulness of any information, apparatus, product, or process disclosed, or represents that its use would not infringe privately owned rights. Reference herein to any specific commercial product, process, or service by trade name, trademark, manufacturer, or otherwise, does not necessarily constitute or imply its endorsement, recommendation, or favoring by the United States Government or any agency thereof. The views and opinions of authors expressed herein do not necessarily state or reflect those of the United States Government or any agency thereof.

ORNL/TM-10315

Energy Division

IDEAL FLUID PROPERTIES FOR OPTIMIZING ABSORPTION HEAT PUMP PERFORMANCE

H. Perez-Blanco
Energy Division

M. R. Patterson
Computing and Telecommunications Division

J. Braunstein
Chemistry Division

Date Published-April 1987

OAK RIDGE NATIONAL LABORATORY
Oak Ridge, Tennessee 37831
operated by
MARTIN MARIETTA ENERGY SYSTEMS, INC.
for the
U.S. DEPARTMENT OF ENERGY
under contract DE-AC05-84OR21400

MARTIN MARIETTA ENERGY SYSTEMS LIBRARIES
3 4456 0155140 7

Publications Staff

Editor:
S. H. McConathy
Graphic Artist:
L. D. Gilliam
Word Processors:
T. Simmons
F. G. Farrell
Makeup Artist:
G. G. Ross

CONTENTS

NOMENCLATURE v

ACKNOWLEDGMENTS ix

EXECUTIVE SUMMARY xi

ABSTRACT xiii

1. INTRODUCTION 1

1.1 BACKGROUND 1
1.2 SUMMARY OF MODEL 3

2. GENERAL THERMODYNAMIC RELATIONSHIPS 5

2.1 PRELIMINARY CONCEPTS 5
2.2 PARTIAL PRESSURES 6
2.3 MOLAR EXCESS MAGNITUDES 7
2.4 MARGULES EQUATION 9
2.5 STABILITY CONDITIONS 10

3. CYCLE EQUATIONS AND COMPUTER MODEL 12

3.1 HEAT AND MASS BALANCES 12
3.2 OVERALL DESCRIPTION OF COMPUTER PROGRAM 17

4. RESULTS 21

4.1 OPTIMIZATION FOR A GIVEN SET OF TEMPERATURES 21
4.2 CONCLUSION 23

REFERENCES 27

Appendix: A NOVEL APPROACH FOR CYCLE PERFORMANCE PREDICTION 29

NOMENCLATURE

A	coefficient
A_{LPHAH}	coefficient in Margules equation
C_{PLA}	specific heat of liquid absorbent
C_{PVA}	specific heat of vapor absorbent
C_{PVR}	specific heat of refrigerant vapor
C_{PLR}	specific heat of refrigerant liquid
D_{ELHA}	heat of vaporization of absorbent at reference temperature
D_{ELHR}	heat of vaporization of refrigerant at reference temperature
f	functional dependence
G	Gibbs free energy function
HAV	partial molal enthalpy of absorbent on vapor
HAS	partial molal enthalpy of absorbent in solution
HLR	enthalpy of liquid refrigerant
HRV	partial molal enthalpy of refrigerant in vapor
HRS	heat partial molal enthalpy of refrigerant in solution
HOV	heat of vaporization of the mixture
h	specific enthalpy
H	enthalpy
h_R^E	refrigerant excess partial molar enthalpy
h_A^E	absorbent excess partial molar enthalpy
K	Margules equation coefficient
L	heat of vaporization, Margules equation coefficient
M	Margules equation coefficient
P	vapor pressure

P_R	refrigerant partial pressure
P_A	absorbent partial pressure
P_R^o	pure refrigerant vapor pressure
P_A^o	pure absorbent vapor pressure
P_{ZR}	pressure scale factor
Q_a	heat exchanged in absorber
Q_c	heat exchanged in condenser
Q_e	heat exchanged in evaporator
Q_g	heat exchanged in generator
R	universal gas constant
R_x	reflux ratio
T	temperature
T_{REF}	reference temperature
x	refrigerant mole fraction

Superscripts

o	pure fluid
E	excess
l	liquid
X	mole fraction
m	mixture

Subscripts

A	absorbent
D	delivery
F	function
R	refrigerant
W	sink

Greek Symbols

α interaction coefficient in Margules equation

B term in Margules coefficient

γ activity coefficient

μ partial molar Gibbs function or chemical potential

ACKNOWLEDGMENTS

The authors wish to acknowledge the Department of Energy Office of Industrial Programs for its support of this work. The comments and revisions of S. I. Kaplan are greatly appreciated, as are discussions with J. M. Simonson and S. K. Fischer and the efforts of the publications staff toward the completion of this report.

EXECUTIVE SUMMARY

Within the technology area of absorption heat pumps, two broad issues are being pursued vigorously. One is the development of advanced cycles, and the other is the search for new fluids. The ultimate result sought by the research organizations involved in these issues is to raise the thermal performance of absorption cycles to generate cost-effective alternatives to currently employed systems. With few exceptions, advanced cycles call for additional hardware and levels of complexity over existing cycles. The search for new fluids, on the other hand, focuses on producing alternatives that can withstand high temperatures, are compatible with common construction materials, or have a range of solubility appropriate for new advanced cycles.

The present work takes a radically different route than the ones currently being pursued. At the request of the DOE Office of Industrial Programs, this work aimed at answering the following questions: Which type of working fluids will improve the performance of existing, simple heat pump systems? How can these fluids be defined? What are the potential performance improvements? The answers to these questions are relevant from the following standpoint: an alternative route other than the development of advanced cycles may exist for enhancing thermal performance, and that alternative could very well be fluids with properties similar to those unearthed by this study.

A simple model of a single-effect heat pump was formulated, with adequate provisions for calculating the distillation and pumping energy requirements. The working fluid was modeled parametrically, employing a thermodynamically consistent equation of state. An optimization subroutine was used to calculate the parameter values that maximize the coefficient of performance (COP) of the heat pump. The set of parameters thus arrived at defines an ideal fluid combination that can reach COPs on the order of 90% of Carnot at typical heat recovery industrial temperatures. This value compares with 66% of Carnot obtainable with current systems.

The Margules equation defines a thermodynamically consistent fluid pair in the sense that, to the best of our understanding, none of the basic laws of thermodynamics are violated. Yet, the best that can be hoped for is to find solutions that approach the ideal fluid properties, and this is by no means a simple undertaking. A way to simplify this search could be to thin out the numbers of defining parameters by carrying out a sensitivity analysis. This work, which remains to be done, could prove very useful for defining research directions.

ABSTRACT

This report focuses on defining the fluid properties that will optimize the performance of a heat pump cycle. A simple heat pump computer model in conjunction with a parametric binary solution model is coupled to a computer code that searches for optimum values. The code determines the values of the parameters that maximize the thermal performance of the heat pump. The set of parameters is thermodynamically consistent. This set describes an ideal fluid with which single-effect cycle performance of 90% of Carnot is possible. The ideal fluid properties are a guide toward the properties that real fluids must exhibit in order to enhance the thermal performance of single-effect cycles.

1. INTRODUCTION

1.1 BACKGROUND

The Office of Industrial Programs (OIP) of the Department of Energy is developing advanced chemical heat pumps for industrial applications. The search for new working fluids for heat pumps is an active part of this program. The search focuses on fluids for high temperature applications.[1] The OIP defined the strategy for a fluids search in the following way: the properties of an ideal fluid must be defined. Those properties may then be used as a guide in the search for new, real fluids. The methodology employed for defining the fluid as well as the ideal fluid properties are described in this report.

The general approach undertaken was based on well-known facts: some properties are desirable for virtually any heat pump cycle considered, whereas the desirable values of other properties are highly cycle specific.[2] For instance, low corrosivity and chemical stability at high temperatures are desirable fluid features that apply to virtually any cycle. However, high or low heats of solution are desirable depending on the type of cycle under consideration.[2] The desirability of positive or negative deviations from Raoult's Law has been investigated before, with conflicting results.[3,4] Maximizing cycle performance by means of operation at critical pressures has also been proposed.[5] In this report, we focus on a heat amplifier cycle. Thus, the desirable trends of thermodynamic properties defined here are specific to the heat amplifier cycle, which is explained below.

In a heat amplifier cycle, also known as a refrigeration cycle, a working solution formed by an absorbent and a refrigerant is employed. In the generator (Fig. 1), heat is applied to boil off refrigerant from the solution. If the absorbent is volatile, a distillation column with a reflux condenser is employed to obtain nearly pure refrigerant. The refrigerant is condensed in the condenser (state point 6), where heat is removed. The pressure of the refrigerant liquid is then reduced, and the refrigerant is evaporated in the evaporator. The heat for evaporation is furnished by waste heat. The refrigerant vapor (state point 8) is absorbed in the solution coming from the generator (state point 3) via a recuperative heat exchanger. In the absorber, the heat evolved during absorption is removed as process heat. The solution, rich in refrigerant (state point 4), returns to the generator (state point 1), after being preheated in the solution heat exchanger by the solution flowing into the absorber. In the heat amplifier cycle just described, heat is delivered in the condenser and in the absorber, and heat is furnished in the generator and evaporator.

To define the guiding criteria for the new fluid search for heat amplifier cycles, we chose the following approach. Simple, pure-fluid models were formulated for both absorbent and refrigerant. These models

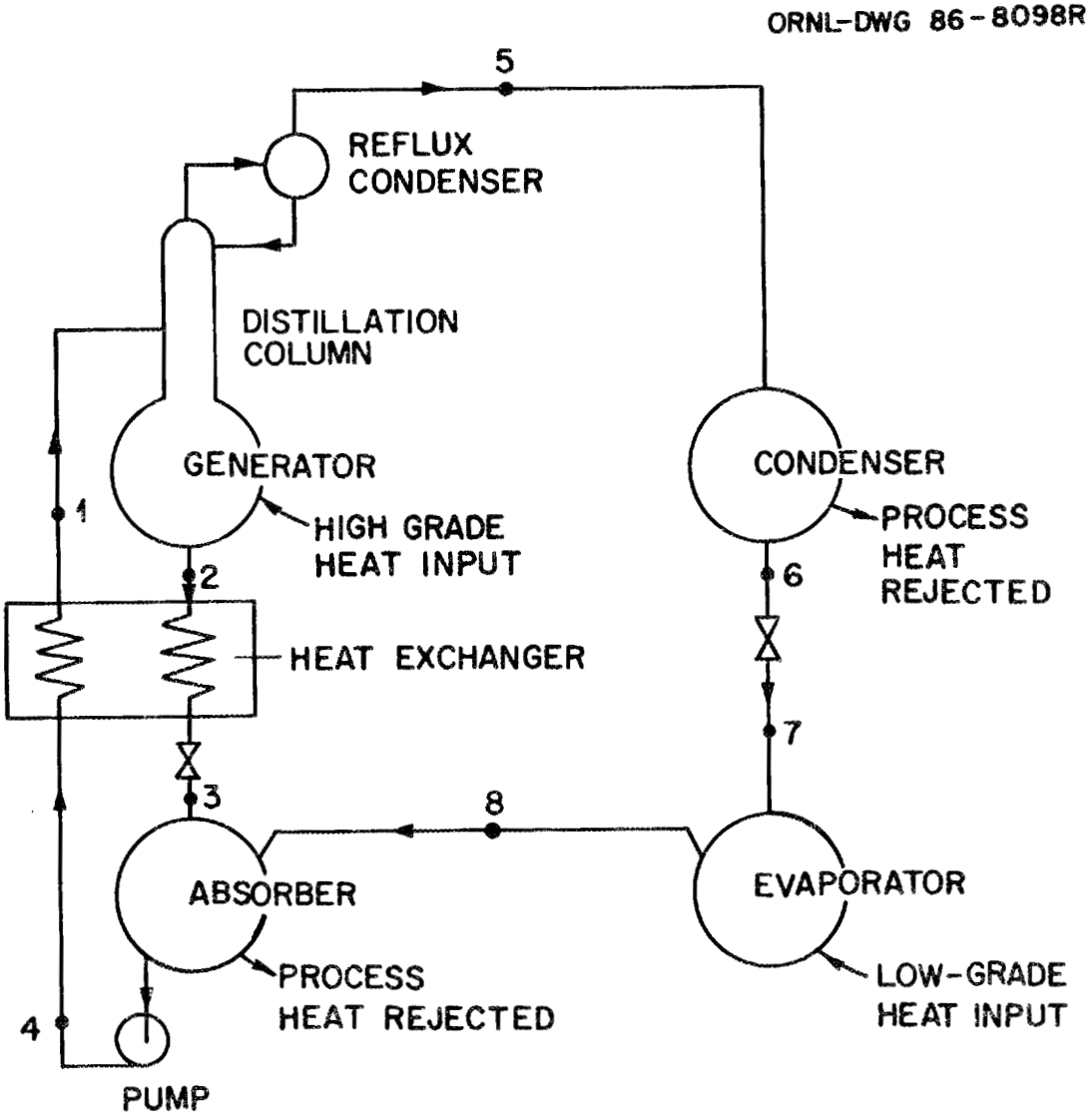

Fig. 1. Schematic of a heat amplifier cycle.

are thermodynamically consistent. Key properties such as specific heats and heats of vaporization were cast in parametric form. The absorbent and refrigerant form a solution. The thermodynamic properties of this solution (i.e., vapor pressure, enthalpy) are a function of the pure fluid properties and of the type of molecular interactions that take place in mixing. The properties of the solution strongly influence cycle performance. To characterize the solution properties, a parametric model of the solution was formulated. The model is also thermodynamically consistent.

The fluid parametric models were combined with a computer model of a heat amplifier cycle. Special features of this model were the distillation column, formulated as per the Ponchon Savarit method, and the capability of varying heat exchanger effectiveness. The energy spent in distillation in the case of a volatile absorbent was thus taken into account.

The parametric fluid model and the heat amplifier cycle were then combined with an optimizer subroutine. The objective function was formulated as the coefficient of performance (COP) of the cycle. The optimizer then defined the parameters of the fluid models that maximize the thermal performance of the cycle. The values of the parameters thus defined were employed to formulate criteria for the search of new fluids.

1.2 SUMMARY OF MODEL

A basis for investigation of the characteristics of an ideal binary mixture of fluids for heat pump applications was established by the selection of a simple heat amplifier cycle, in which the optimization of the model fluid could be examined. The selection of this simple cycle allows one to study the working fluid without the larger number of complications brought about by using an advanced design of the heat amplifier. The advantage of being able to focus on the characteristics of the fluid is apparent.

The temperatures at the outlet of the generator, the absorber, the condenser, and the evaporator were fixed at constant values. These temperatures define the upper, middle, and low operating temperatures for the cycle. The reference temperature was established at 273 K.

Standard mass and energy balances were used to obtain the cycle equations, supplemented by properties such as vapor pressures, latent heats, and specific heats that were varied to determine their values for an ideal binary fluid.

The model was gradually increased in complexity by allowing more properties to be included in the optimization. Twelve variables eventually were changed from a fixed value to variables that are determined by the optimization process. Each addition of a parameter to the list to be optimized adds to the amount of computer time required to

find the optimum, so we attempted to keep the number of parameters as low as was practical to yield valid and useful information. The current set probably includes enough parameters to characterize many working fluids but constitutes a minimum number of parameters.

Once the values for these twelve parameters are obtained by optimization, the inverse problem is to identify a working fluid, a binary pair of fluids, that corresponds as nearly as possible to those properties. This problem is just as demanding as that of finding the optimum properties and requires skill and insight into the relationships among these variables for realizable substances. This problem is not part of the scope of this work and will not be addressed herein at any great length. Instead, the results of the optimization will be presented and the findings will be summarized. These results will serve to guide the search for a realizable working fluid.

The twelve fluid properties chosen as parameters for the optimization are defined in Chap. 3. They include specific heats, latent heats, vapor pressures, and interaction parameters that govern the temperature dependence and composition dependence of the activity coefficient and the structural effect of the binary interaction on the activity coefficient. The objective is to maximize the COP of the heat pump by varying these twelve parameters. A pattern search optimization program was employed to perform this optimization, and the results are given in a later section. The optimization results conform with intuitive expectation on those properties for which such an expectation can be formulated.

The overall results of the analysis are reasonable: a set of properties has been determined that can furnish guidance in determining the actual substances that come closest to realizing this desired set.

2. GENERAL THERMODYNAMIC RELATIONSHIPS

2.1 PRELIMINARY CONCEPTS

In an absorption heat pump cycle, as in an absorption refrigerator, principal heat consuming (and heat evolving) steps that depend strongly on thermophysical properties of the components include the vaporization (and condensation) of pure refrigerant and the vaporization (and condensation) of refrigerant in a liquid mixture of refrigerant and absorbent components at different temperatures in the cycle.[1] The properties on which the heat evolved or absorbed in each of the steps depends are the enthalpy of vaporization, the heat capacities of liquid and vapor, and the enthalpies of mixing of refrigerant and absorbent, as functions of temperature and of solution composition.[2,6,7] The need to operate the cycles at manageable pressures constrains the magnitude of acceptable vapor pressures. So that a range of operating conditions can be provided that will permit the pumping of the desired quantity of thermal energy at the desired temperatures, the solution field or range of temperatures, pressures, and compositions must be sufficiently broad.

The thermodynamic information needed to describe the above characteristics and requirements is contained in the Gibbs free energy and its temperature and pressure dependence for the pure components along with temperature, pressure, and composition dependence for their solution.[8-10]

The smallest set of parameters that can account for most of the thermochemical properties of mixtures in a cycle is made up of vapor pressures and heats of vaporization of refrigerant and of absorbent at a reference temperature (four parameters); heat capacities of liquid and gaseous refrigerant and absorbent (four parameters); activity coefficients and their composition and temperature dependence for solutions of refrigerant in absorbent (minimum of three parameters, one each for an interaction parameter, a temperature dependence that is proportional to reciprocal temperature, and a composition asymmetry factor). Not included are fugacity coefficients of the mixed vapors or the volumetric and kinetic properties that are related to heat and mass transfer.

Below is a summary of the important thermodynamic relations that must be satisfied by the model. Complete derivations are not given, but they may be found in ref. 9.

The heats of vaporization of the pure components, usually pure absorbent A and refrigerant R, are

$$L_R^o(T) = D_{ELHR} + (C_{PVR} - C_{PLR})\cdot(T - T_{REF}) \ , \qquad (2.1)$$

$$L_A^o(T) = D_{ELHA} + (C_{PVA} - C_{PLA})\cdot(T - T_{REF}) \ . \tag{2.2}$$

The heat capacities have been assumed to be independent of temperature in order to reduce the number of parameters and because data are scarce. In the more general case of temperature-dependent heat capacities,

$$L_R^o(T) = D_{ELHR} + \int_{T_{REF}}^{T} (C_{PVR} - C_{PLR})dT \ . \tag{2.3}$$

For mixtures of composition mole fraction of refrigerant x, the heats of vaporization are composition dependent also and may be written

$$L_R^x(T,x) = L_R^o(T) - h_R^E(x,T) \ ,$$

$$L_A^x(T,x) = L_A^o(T) - h_A^E(x,T) \ .$$

The terms h_R^E and h_A^E are excess partial molar enthalpies to be discussed later. The heat of vaporization of the mixture may be written

$$HOV = y[HRV(x,T) - HRS(x,T)] + (1 - y)\ [HAV(x,T) - HAS(x,T)] \ , \tag{2.4}$$

where y is the mole fraction of refrigerant in the vapor in equilibrium with solution of composition x.

2.2 PARTIAL PRESSURES

The total pressure is calculated as the sum of the partial pressures of refrigerant and of absorbent as a function of temperature and composition,

$$P = P_R + P_A \ , \tag{2.5}$$

$$P_R + P_A = xP_R^o\gamma_R + (1 - x)P_A^o\gamma_A = xP_R^o\ e^{\mu_R^E/RT} + (1 - x)\ P_A^o\ e^{\mu_A^E/RT} \ , \tag{2.6}$$

where P_R^o and P_A^o are the vapor pressures of pure liquid refrigerant and of pure liquid absorbent. The liquid state activity coefficients, γ_i,

or excess chemical potentials, μ_i^E, are derivable from the excess free energy function for the solution. Note that

$$xP_R^o\gamma_R = yP \ ,$$

$$(1 - x)P_A^o\gamma_A = (1 - y)P \ . \tag{2.7}$$

Since the total pressure is not high, the vapor phase is assumed to be ideal.

The dependence of the vapor pressure of pure refrigerant (P_R) on temperature is

$$P_R = P_1^o(T) = P_R^o(T_{REF}) \exp \{\frac{1}{R} \cdot [-D_{ELHR} \cdot (\frac{1}{T} - \frac{1}{T_{REF}}) - \Delta C_R \cdot (1 - \frac{T_{REF}}{T} + \ln \frac{T_{REF}}{T})]\} \ , \tag{2.8}$$

where $P_R^o(T_{REF})$ is the pressure scale factor, D_{ELHR} is the heat of vaporization at the reference temperature (T_{REF}), and ΔC_R is the heat capacity difference between vapor and liquid refrigerant. Equation 2.8 applies to $P_A^o(T)$, for absorbent, with the substitution $P_{AZ} = P_A^o(T_{REF})$, (D_{ELHA}), and ΔC_A for P_R^o, D_{ELHR}, and ΔC_R.

2.3 MOLAR EXCESS MAGNITUDES

The thermodynamic properties of a mixture are described by the Gibbs free energy function and its derivatives with respect to composition and temperature.[9] This function consists of an ideal part and an excess part. The ideal part leads to expressions such as Raoult's Law for the vapor pressures of the mixtures, zero heat of mixing, and random entropy of mixing. The excess (i.e., nonideal or excess over ideal) free energy function describes the deviations from ideality of the mixture. These include the deviations from Raoult's Law for the vapor pressures, the heat of mixing of the components, and the change of heats of vaporization with composition. These deviations can be described in terms of activity coefficients of the components or, in equivalent form, in terms of excess chemical potentials. The excess free energy per mole of mixture is an intensive quantity. It depends on temperature, composition, and pressure, but the dependence on pressure is weak for condensed phases at ordinary pressures. The excess free energy function may be written in the form

$$G^E(T,x,P) = Ax(1 - x) \ [1 + f(x)] \ , \tag{2.9}$$

where f may be a polynomial in x, and A and the coefficients in f may be temperature dependent.[11-13]

The coefficient A expresses the principal part of the composition dependence of the excess thermodynamic properties of the mixture. It is sometimes referred to as the interaction parameter since, in molecular theories of mixing, it arises from the difference of energy between pairs of like and of unlike molecules.

The excess chemical potential of a component in a mixture is the partial molar excess free energy. It is related logarithmically to the activity coefficient and may be derived from the excess free energy function.

$$\mu_R^E = RT \ln \gamma_R = G^E + (1 - x)(\partial G^E/\partial x)_T \ , \tag{2.10}$$

$$\mu_A^E = RT \ln \gamma_A = G^E - x(\partial G^E/\partial x)_T \ . \tag{2.11}$$

The chemical potentials of refrigerant and of absorbent in the liquid mixture are μ_R^l and μ_A^l; superscripts o and Δ designate standard states of pure liquid or pure gas at 1 atm (101.325 kPa) pressure. The composition dependence may be expressed as follows:

$$\mu_R^l = \mu_R^o + RT \ln x + \mu_R^E \ ,$$

$$\mu_A^l = \mu_A^o + RT \ln (1 - x) + \mu_A^E \ . \tag{2.12}$$

The first term on the right hand side is temperature dependent but composition independent, the second term is the ideal composition dependence, and the third term describes the nonideality. The chemical potentials of refrigerant and of absorbent in the vapor phase are represented by μ_R^v and μ_A^v, where P_R and P_A designate the partial pressures above the liquid. Assuming ideal gas behavior in the vapor phase $[\mu_R^E(\text{vapor}) = \mu_A^E(\text{vapor}) = 0]$,

$$\mu_R^v = \mu_R^\Delta + RT \ln P_R \ ; \tag{2.13}$$

$$\mu_A^v = \mu_A^\Delta + RT \ln P_A \ .$$

Enthalpies are related to the free energy function through the Gibbs-Helmholtz equation. The excess partial molal enthalpies and the heat of mixing, ΔH_M, thus follow from the temperature dependence of the chemical potentials.

$$h_R^E = \partial(\mu_R^E/T)/\partial(1/T) = (\partial/\partial \frac{1}{T}) \{[G^E + (1 - x)\partial G^E/\partial x]/T\} , \qquad (2.14)$$

$$h_A^E = \partial(\mu_A^E/T)/\partial(1/T) = (\partial/\partial \frac{1}{T}) \{[G^E - x(\partial G^E/\partial x)]/T\} ,$$

$$\Delta H_M = (1 - x)h_A^E + xh_R^E = (1 - x) H_A^X + x H_R^X . \qquad (2.15)$$

2.4 MARGULES EQUATION

A minimum of twelve coefficients is needed to characterize the thermodynamic properties of the binary fluid - eight for the pure components and four for the mixtures. Although many other formulations of the activity coefficients have been reported,[14-19] the Margules equation provides a relatively simple and thermodynamically consistent representation of the mixture excess properties as functions of temperature and composition. In a three-coefficient representation, two of the coefficients are needed for the temperature dependence of the interaction parameter; this interaction parameter determines the major part of the composition dependence at each temperature. A third coefficient accounts for possible distortion of the composition dependence, shifting the maximum (or minimum) heat of mixing to compositions other than $x = 0.5$. In such a three-coefficient formulation, the excess partial molar enthalpies and excess chemical potentials are linear in reciprocal temperature (but with differing coefficients). In the current study, the excess partial molar enthalpies were taken as linear in temperature, which requires a four-coefficient expression. The term $(K + LT)$ is the symmetric part of the enthalpy interaction parameter and β is the skewing factor.

$$h_R^E = (K + LT) [1 + 2 (\beta - 1)x] (1 - x)^2 , \qquad (2.16)$$

$$h_A^E = (K + LT) [\beta - 2 (\beta - 1)(1 - x)] x^2 , \qquad (2.17)$$

where $(K + LT) = A_{LPHAH}$.

Integration of the Gibbs-Helmholz equation (Eq. 2.14) leads to the form of the excess chemical potential consistent with the form of the excess enthalpy.

$$\mu_R^E = RT \ln \gamma_R = [K - MT + LT(1 - \ln T)] \cdot [1 + 2 (\beta - 1)x] (1 - x)^2 , \qquad (2.18)$$

$$\mu_A^E = RT \ln \gamma_A = [K - MT + LT(1 - \ln T)]$$
$$\cdot [\beta - 2(\beta - 1)(1 - x)]\, x^2 , \qquad (2.19)$$

where the symmetric part of the excess chemical potential interaction parameter is

$$\alpha = [K - MT + LT(1 - \ln T)] .$$

The term $\beta - 1$ represents the asymmetry of the composition dependence. With β equal to 1, the equation represents a symmetrical composition dependence of the deviations from ideality. With β equal to 1 and L equal to M equal to 0, the equations reduce to those for a regular solution,*

$$RT \ln \gamma_R = K(1 - x)^2 = h_R^E , \qquad RT \ln \gamma_A = Kx^2 = h_A^E . \qquad (2.20)$$

2.5 STABILITY CONDITIONS

A number of auxiliary conditions must be imposed on the parameters during cycle calculation to ensure thermodynamic consistency and physically realistic properties.[9] Thus, since the material balances and flow equations in the model of the absorption cycle are based on a single-liquid phase and a vapor phase, the parameters in the composition and temperature dependence must satisfy the Gibbs condition for stability of a phase:

$$(\partial \mu_i / \partial x_i)_T > 0 . \qquad (2.21)$$

The system is presumed to be below the critical temperature. Thus the heat capacity difference between vapor and liquid, which is negative since vapor heat capacities are generally of the order of one-half to two-thirds of liquid heat capacities, should not be large enough to permit the heat of vaporization to become zero or negative at any point in the cycle.

$$L_R^o(T) = D_{ELHR} + (C_{PVR} - C_{PLR})\,(T - T_{REF}) > 0; \quad C_{PVR} < C_{PLR} ,$$

$$H_A^o(T) = D_{ELHA} + (C_{PVA} - C_{PLA})\,(T - T_{REF}) > 0; \quad C_{PVA} < C_{PLA} . \qquad (2.22)$$

---

* Data sources for mixtures are widely scattered in the literature. Compilations include refs. 11 and 19 through 22.

Additional conditions relating to solubilities or other physical characteristics may also be required.

3. CYCLE EQUATIONS AND COMPUTER MODEL

3.1 HEAT AND MASS BALANCES

For the cycle diagram shown in Fig. 1, certain operating values are fixed during the current study. The four operating temperatures, namely T_2, T_4, T_6, and T_8, are fixed. In addition, the effectiveness E of the heat exchanger is fixed at 0.6.

The vapor pressure of the refrigerant at a given temperature is given by the equivalent of Eq. 2.8:

$$P_R(T) = P_{ZR} \exp[(-A + BT_{REF}) \cdot (1/T - 1/T_{REF}) + B \ln(T/T_{REF})] \quad ,(3.1)$$

where

P_{ZR} = pressure scale factor,
$A = D_{ELHR}/R$,
$B = (C_{PVR} - C_{PLR})/R$.

Using the above, we calculate

$$P_6 = P_R(T_6) \tag{3.2}$$

and

$$P_8 = P_R(T_8) \ . \tag{3.3}$$

Knowing the pressure and temperature at these points in the cycle, we can solve for x_2 and x_4 by using a function to zero the following equation,

$$x_F = \ln x + \alpha[1 + 2(\beta - 1)x] \ (1 - x)^2/RT - \ln (P/P_{ZR}) = 0 \ , \tag{3.4}$$

and solve for the molar concentration of refrigerant x. The parameter α in Eq. 3.4 can have a temperature and concentration dependence. The nature of this function is explained in Sect. 4. In this manner, given P_6 and T_2 as the pressure and temperature at state point 2 in the cycle, we solve for

$$x_2 = Z[x_F(x, T_2, P_6)] \ , \tag{3.5}$$

where Z is the operator that zeros the function x_F. In a similar manner, we find that

$$x_4 = Z[x_F(x, T_4, P_8)] \ . \tag{3.6}$$

Having found x_2 and x_4, we can find the molar flow rates given unit rates at four nodes:

$$n_5 = 1 = n_6 = n_7 = n_8 \ . \tag{3.7}$$

From mass balances on the generator for refrigerant and total flows, we get

$$n_1 x_1 = n_2 x_2 + 1 \tag{3.8}$$

and

$$n_1 = n_2 + 1 \ . \tag{3.9}$$

These two equations yield a value for the flow at node 2,

$$n_2 = (1 - x_4)/(x_4 - x_2) \ , \tag{3.10}$$

which can be substituted in the above equation to find n_1.

The specific enthalpy of the refrigerant vapor relative to the pure liquid is represented by the function

$$HRV(T) = D_{ELHR} + C_{PVR}(T - T_{REF}) \ . \tag{3.11}$$

From this expression we obtain

$$h_5 = HRV(T_1) \tag{3.12}$$

and

$$h_8 = HRV(T_8) \ . \tag{3.13}$$

The corresponding extensive enthalpies are

$$H_5 = n_5 h_5 = h_5 \tag{3.14}$$

and

$$H_8 = n_8 h_8 = h_8 \ . \tag{3.15}$$

Representing the intensive enthalpy for liquid refrigerant by the function

$$HLR = C_{PLR}(T - T_{REF}) \ , \tag{3.16}$$

we obtain

$$h_6 = HLR(T_6) \ , \tag{3.17}$$

$$H_6 = h_6 \ , \tag{3.18}$$

and

$$H_7 = H_6 \ . \tag{3.19}$$

Solution enthalpies are functions of both concentrations and temperatures. We represent the specific enthalpy of the refrigerant in solution by

$$HRS(T,x) = C_{PLR}(T - T_{REF}) + (K + LT)[1 + 2(\beta - 1)x](1 - x)^2 \tag{3.20}$$

and that of the absorbent in solution by

$$HAS(T,x) = C_{PLA}(T - T_{REF}) + (K + LT)[\beta - 2(\beta - 1)(1 - x)]x^2 \ . \tag{3.21}$$

From these two, we can express the total enthalpy of the mixture at a given node i as

$$H_m(n_i^o, x_i^o, T_i^o) = n_i^o x_i^o HRS(T_i^o, x_i^o) + n_i^o(1 - x_i^o)HAS(T_i^o, x_i^o) \ . \tag{3.22}$$

Because we know T_2, x_2, T_4, and x_4, we can find the total enthalpy of those two points directly:

$$H_2 = H_m(n_2, x_2, T_2) \tag{3.23}$$

and

$$H_4 = H_m(n_4, x_4, T_4) \quad . \tag{3.24}$$

To find the total enthalpy at nodes 1 and 3, we need T_1 and T_3. The value for T_3 can be found from the value given for the recuperator efficiency $E = 0.6$:

$$E = (T_2 - T_3)/(T_2 - T_4) \quad , \tag{3.25}$$

from which

$$T_3 = T_2(1 - E) + T_4 E \quad . \tag{3.26}$$

From continuity,

$$x_3 = x_2 \tag{3.27}$$

and

$$x_1 = x_4 \quad . \tag{3.28}$$

We calculate H_3 from

$$H_3 = H_m(n_3, x_3, T_3) \quad , \tag{3.29}$$

and an energy balance around the recuperator yields

$$H_1 = H_2 + H_4 - H_3 \quad . \tag{3.30}$$

The temperature T_1 can now be found by zeroing the enthalpy function because the flow n_1 and the concentration x_1 are known,

$$T_1 = Z(H_3, n_1, x_1, T) \quad . \tag{3.31}$$

The total enthalpy of the vapor emerging from the generator is calculated at the average temperature of the other two generator flows,

$$h_5 = HRV(T_6) \tag{3.32}$$

and

$$H_5 = h_5 \ . \tag{3.33}$$

The energy required for distillation is a function of the reflux. For the present model, the minimum reflux ratio was determined by assuming a refrigerant concentration of 0.99. Then, the minimum reflux R_x was calculated by determining the operating line that coincides with the vapor/liquid isotherm that corresponds to the feed inlet conditions. It can be shown[23] that the intersection of that operating line with the constant concentration line, x = 0.99, in the enthalpy concentration diagram determines a point. The enthalpy difference between this point and the saturated vapor of the same concentration is the heat removed to condense the reflux. From this enthalpy value and from the heat of condensation of the refrigerant, the reflux ratio can be calculated.

The heat flows can be calculated for the generator as follows:

$$Q_g = H_2 + (1 + R_x)H_5 - H_1 - R_x H_6 \ , \tag{3.34}$$

where R_x = reflux ratio. The absorber heat flow is

$$Q_a = H_3 + H_8 - H_4 \ , \tag{3.35}$$

the heat flow for the condenser is

$$Q_c = (H_5 - H_6)(1 + R_x) \ , \tag{3.36}$$

and the evaporator heat flow is

$$Q_e = H_8 - H_7 \ . \tag{3.37}$$

The pump work is

$$W = (P_6 - P_8)m_4 V_{sol} \ , \tag{3.38}$$

where the specific volume of the solution is V_{sol} taken constant and equal to 0.01. That is, no correction due to solution volume change was adopted. Finally, the COP is

$$COP = (Q_a + Q_c)/(Q_g + 4W) \ . \tag{3.39}$$

The COP is the measure of performance that we choose to optimize in order to determine several thermodynamic properties of the refrigerant-absorbent solution. Its optimization is discussed in the following

section. The factor of 4 is employed to convert the work required by the pump to equivalent thermal energy.

3.2 OVERALL DESCRIPTION OF COMPUTER PROGRAM

The computer program CALS12 is written in Fortran 77 in double precision and executes on the Digital Equipment Corporation (DEC) PDP10 computer. All of the routines in the program are locally written and nonproprietary. The code can readily be transported from one type of computer to another. Its development began on an International Business Machine personal computer (IBM PC) and continued on the IBM PC through the optimization of four parameters.

The complete program is made up of three files. The first file, about 450 lines long, contains the main program, the cycle equations, and the thermodynamic property routines. The second file, about 200 lines long, includes the optimization routine. The third file holds a routine to find a root of a nonlinear equation and has about 130 lines. The overall length of the program is about 780 lines. Because there are no large arrays in the program, the storage requirements for the code are small, about 100 kilobytes.

The running time for the longest running case that has been tried was about 15 min on the PDP10. Different starting values for the 12 parameters being optimized can lead to longer running times, if the starting values are far from the final values that are obtained as a solution. On the other hand, the 15-min maximum could well be less, because there could be fewer time-sharing programs executing simultaneously.

The cycle equations, presented in Sect. 3.1, form the nucleus of the program. The cycle equations are solved in each iteration of the search, producing the COP as a summary of the overall efficiency for that particular set of parameters. The cycle is assumed to be optimized when the COP is maximized. Because the optimizer attempts to minimize the function on which it operates, the quantity

$$F_{test1} = (2.2 - COP)^2$$

is returned to the optimizer as the function value. Note that by minimizing the value of F_{test1}, the value of COP will be maximized and the value 2.2 is larger than the upper limit expected for the COP. The value of F_{test1} should be small in the vicinity of large COPs, but never zero. Squaring the quantity (2.2 − COP) helps convergence near the optimum by exaggerating the larger size of values farther from the optimum.

The function evaluation F_{test1} defined above is returned to the SEARCH optimization routine. The SEARCH routine is a pattern search type of optimization that systematically explores most of the space

within the limits defined for each parameter, gravitating toward those parameters that make the function F_{text1} a minimum. The present study examines the following 12 parameters:

1. K = a Margules parameter
2. L = a Margules parameter
3. M = a Margules parameter
4. CPVR = specific heat for refrigerant vapor [kJ/(kmol.K)]
5. DELHR = latent heat for refrigerant (kJ/kmol)
6. DELHA = latent heat for absorbent (kJ/kmol)
7. CPLR = specific heat for liquid refrigerant [kJ/(kmol.K)]
8. CPLA = specific heat for absorbent liquid [kJ/(kmol.K)]
9. CPVA = specific heat for absorbent vapor [kJ/(kmol.K)]
10. PZA = multiplier for absorbent pressure (kPa)
11. PZR = multiplier for refrigerant pressure (kPa)
12. BETA = β, a Margules parameter

The SEARCH routine allows each of these parameters to be limited to a definite range; however, no other inequality constraints are allowed. The solution is also required to satisfy the condition for nonseparation of the two liquids. This constraint is not imposed on the program by the SEARCH routine; instead, the values for the separation criteria are printed both during and at the end of the run for evaluation by the user.

A flowchart for the program is given in Fig. 2. This flowchart shows that the main program CALS12 has the functions of reading the parameter estimates for all twelve parameters, setting the lower and upper limits for each parameter, calling the optimization routine SEARCH, and printing the final results.

The SEARCH routine requires 14 arguments including initial estimates for the parameters, upper and lower limits on each parameter, the name of the function to be evaluated (IDEAL), and convergence criteria. In turn, SEARCH calls IDEAL with two arguments: XARG, the vector of parameter values, and FTEST1, the function value returned to SEARCH. IDEAL calls nine functions that evaluate various thermodynamic properties, including vapor pressure for the refrigerant (PR), partial pressure for the refrigerant and absorbent (PRF and PAF), enthalpy of the refrigerant vapor and liquid (HRV and HRL), and the extensive enthalpy of the mixture (HMIX). The HMIX function calls solution enthalpy routines for refrigerant and absorbent (HRS and HAS). Several of these routines call the routines ALPHAF and ALPHAH to evaluate the contribution of the Margules' equation to the activity coefficient and, in turn, to the property being calculated, for example, the pressure.

The function ZERDOB is used to find the values of concentration given the values of solution pressure and temperature or to find the temperature corresponding to total enthalpy, concentration, and amount of refrigerant. It solves for the root of a nonlinear equation, thus

ORNL-DWG 86-8015

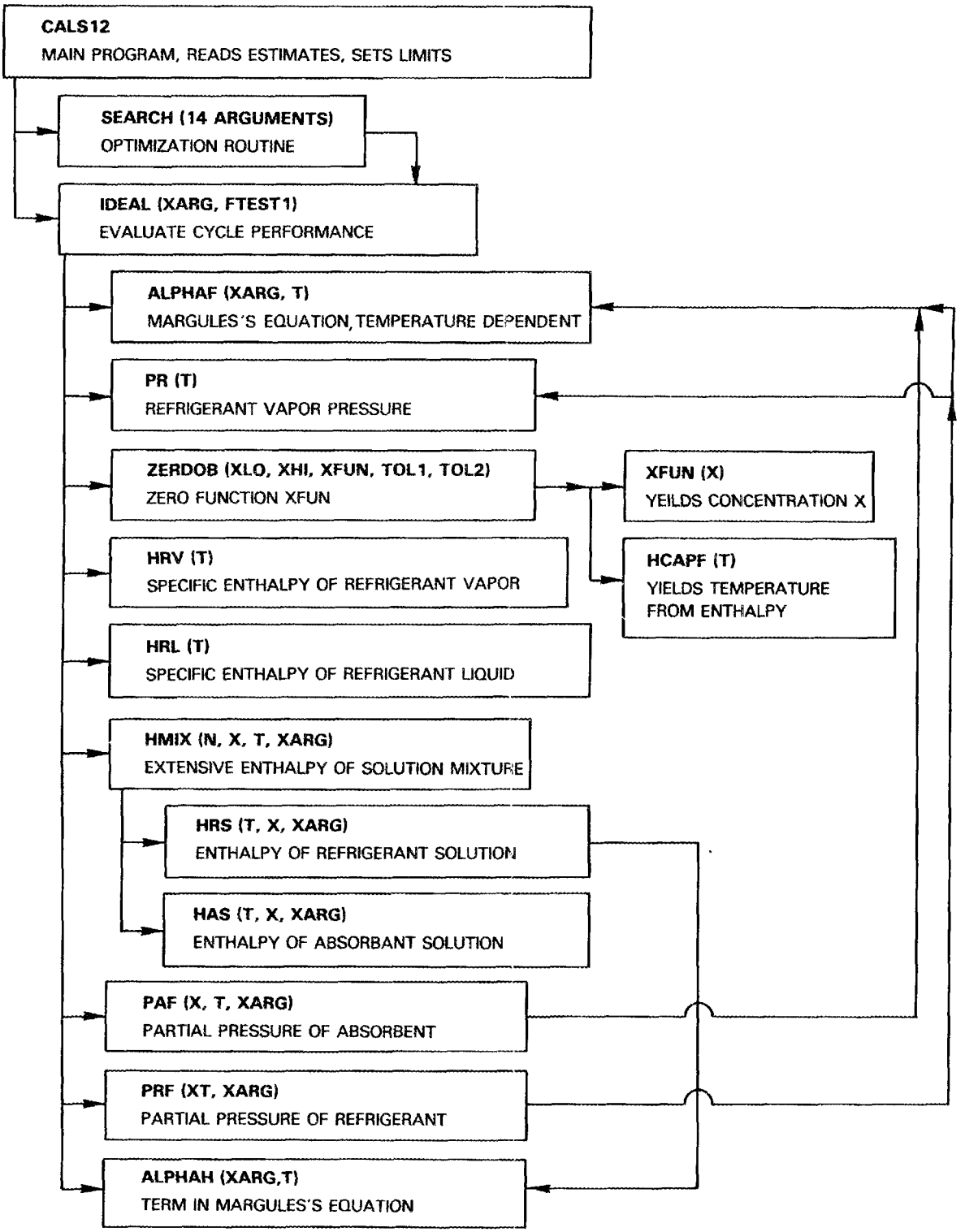

Fig. 2. Flowchart of computer program.

zeroing the function, in the range XLO to XHI within the tolerance on X of TOL1 and the tolerance on the function value of TOL2.

In operation the optimizer SEARCH calls the function evaluation IDEAL several hundred times during a run. Despite the lack of inequality constraints, the SEARCH routine has proven to be reliable for this problem. The SEARCH routine found the optimum in fewer iterations than a gradient search routine that also was tried. The computer time required for twelve variables on the PDP10 in double precision is not so large as to inhibit trying other starting values or other configurations of the heat pump. The results of the optimization for two independent variables were checked by plotting the COP for several values of the variables. In addition, SEARCH had been employed before in a relatively large number of problems, yielding reasonable results.

4. RESULTS

4.1 OPTIMIZATION FOR A GIVEN SET OF TEMPERATURES

When the temperatures at state points 6, 8, 4, and 2 are given (see Fig. 1), the program arrives at the values of the parameters that define the fluid properties. These values optimize the thermal performance of the cycle. The parameters, described in Chap. 2, influence the activity coefficient of the refrigerant as follows:

$$RT \ln(\gamma) = \{K - MT + LT[1 - \ln(T)]\} \cdot [1 + 2(\beta - 1)x] . (1 - x)^2 .$$

The results of the optimization run are given in Table 1 for the parameters that occur in the program, in the order that they occur, along with the limits that were imposed during the run.

The values of Table 1 define the thermodynamic characteristics of the ideal fluids and of their solutions. The calculated COP for this heat pump is 2.18, which is high for a single-effect cycle. The Carnot COP for those temperatures is 2.43. Single-effect cycles with conventional fluids have calculated COPs ranging from 1.4 to 1.7. The "ideal" fluid does enhance the cycle thermal efficiency.

Regarding the pure refrigerant properties, the results of Table 1 are somewhat surprising. The optimizer could vary the heat of vaporization, but related to the specific heats as per Eqs. 2.1 and 2.2. Although a large heat of vaporization would reduce the circulation losses, large values of the specific heats would increase them. One would expect then that the heat of vaporization would turn out to be large, with the specific heats following suit. This turned out not to be the case. The specific heats, or rather the circulation losses associated with them, are of such magnitude that the optimizer reduced the specific heats to their minimum value, with the heat of vaporization following suit.

The specific heats of the absorbent, its vapor pressure, and its heat of vaporization were minimized. These would appear to be the reasonable steps toward reducing the rectification and circulation losses. The number of parameters in the program could be reduced by specifying a nonvolatile absorbent, but the more general equations have been retained to cover the possibility of volatile absorbents.

The optimizer, then, for this particular cycle and set of conditions produces a positively deviating solution, both in the free energy (i.e., positive deviations from Raoult's Law) and in the enthalpy (endothermic mixing), decreasing the heat required in the generator and released in the absorber. The detrimental effect of the increased circulation rates is offset by minimization of the specific heats.

Table 1. Optimization results for temperatures
T_2 = 420 K, T_4 = T_6 = 340 K, T_8 = 300 K

Identification	Range allowed	Final value
Margules K	$-5000 < K < 5000$	1701
Margules L	$-4 < L < 4$	-2.766
Margules M	$-20 < M < 20$	17.91
Refrigerant vapor/specific heat	$10 < C_{PVR}$	3 kJ/(kmol.K)
Refrigerant latent heat	$10,000 < D_{ELHR} < 50,000$	10,051 kJ/(kmol.K)
Absorbent latent heat	$5000 < D_{ELHA} < 20,000$	5000 kJ/(kmol.K)
Refrigerant liquid specific heat	$5 < C_{PLA} < 100$	5.44 kJ/(kmol.K)
Absorbent liquid specific heat	$5 < C_{PLA} < 80$	5 kJ/(kmol.K)
Absorbent vapor specific heat	$5 < C_{PVA} < 1.5$	1.50
Absorbent pressure multiplier	$0 < P_{ZA} < 10$	0 Pa
Refrigerant pressure multiplier	$100 < P_{ZR} < 400$	100 Pa
Margules β	$-20 < BETA < 20$	12.04

Clearly, as the ranges allowed for each parameter or the solution heat exchanger effectiveness is varied, the type of solution changes. Negatively deviating solutions can then be obtained. However, the results presented here for a positively deviating solution are for the best COP. Concerning the solution properties, it is clear that of all the Margules coefficients, only L is negative. Yet, the value of K is large enough that the solution deviates positively from Raoult's Law. The heats of vaporization of the solution and the heats of mixing are shown in Table 2, for exit generator and absorber conditions. The heat of vaporization from the generator is reduced by the heat of mixing, namely, 881 kJ/kmol. As the solution absorbs refrigerant in the absorber, the heat delivered is reduced by the heat of mixing, or 1314 kJ/kmol. Systems showing positive deviations from Raoult's Law include mixtures of low-melting salts, such as tetra-m-butylammonium picrate, with alcohols, such as 1-butenol.[24] However, enthalpy data are not available for that system, and the vapor pressure is lower than that of the optimized fluid.

In any case, it would be premature at this stage to try to identify a fluid having the characteristics found with the optimizer. Additional effort is needed first in matching the equations to real systems. A cursory comparison with known refrigerants shows that the vapor pressure of the pure refrigerant at the upper temperature of the cycle is not far from that of water and is much lower than that of ammonia. The heat of vaporization, however, is smaller even than that of ammonia, leading to a weak dependence of vapor pressure on temperature. The excess entropy of mixing is positive and surprisingly large.

4.2 CONCLUSION

The present study shows that optimization techniques are an adequate tool for determining fluid properties in order to optimize cycle performance. For the particular set of conditions considered here, and for the heat amplifier cycle, it was found that positive deviations from Raoult's Law enhance the COP. Calculated COP values of 2.18 show that the performance of the single-effect cycle could be increased from the current 1.6 if the right fluids could be found or developed.

Clearly, developing new fluids for the single-effect cycle requires being able to "tailor" fluid properties. Basic chemistry of polymers has developed to the point that some properties can be related to molecular characteristics, and a real possibility exists of developing polymers with sought properties. Perhaps the same type of development could be carried out in searching for new heat pump fluids.

This work has demonstrated that the ideal fluid model approach taken can be a useful guide in the search for fluid pairs giving improved COPs in absorption heat pumps. Within the imposed constraints, the optimizer selected properties that if not yet identified among known

Table 2. Heats of vaporization and mixing at typical generator and absorber conditions

	Generator	Absorber
Heat of vaporization, kJ/kmol	8076	7806
Heat of mixing, kJ/kmol	881	1314

substances, are not physically implausible. A number of additional steps are required, however, before successful implementation of the approach can be expected.

The first additional step would be a sensitivity analysis of the parameters in the model. This analysis would serve several purposes.

1. **Uniqueness.** It would indicate whether some of the parameters contribute little to variations in the COP and could therefore be eliminated or fixed to simplify the optimization. It could indicate correlations among the parameters which again could simplify the optimization. It could indicate the kinds of incremental changes in parameters that would be needed for significant improvement of COP that could be correlated with incremental changes of parameters in series of homologous compounds.

2. **Completeness.** The numbers of parameters chosen to represent nonideality of the mixtures is nearly a minimum set. One parameter, M, could be eliminated without loss of generality by choosing the temperature dependence of the interaction parameter to be linear, not in temperature but in reciprocal temperature. On the other hand, the Margules type representation chosen for simplicity accounts for the magnitude, temperature dependence, and composition dependence, including composition asymmetry of the excess thermodynamic quantities. Because the maximum in the excess quantities occurs at the same composition at all temperatures, the change of excess enthalpy, and therefore the change of heat of vaporization, with temperature at a fixed composition is somewhat restricted. An additional parameter to represent the possible shift of the composition of maximum excess enthalpy would remove this restriction and should be included in the sensitivity analysis.

3. **Matching to Real Systems.** Data are reported in the literature on real systems in many different forms. For systems with extensive data, many more parameters are used than in the ideal fluid model (including, for example, temperature-dependent heat capacities) to provide a complete representation. For systems with sparse data, however, the number of parameters would have to be reduced. Data representations for real systems need to be recast in the parametric form of the ideal fluid model so that comparisons are meaningful. This needs to be done in the light of the sensitivity analysis so that the best parametric representation is chosen. This representation, then, should account for the shifts, with composition and temperature, in partial pressures, heats of mixing, and vaporization, which ultimately determine the COP.

4. **Identification of Key Thermodynamic Quantities.** An analysis such as that outlined in the appendix should be extended. This would assist in matching the shifts of heats of vaporization with composition and temperature to the model parameters and choosing the most appropriate data representations for real systems and for the model.

5. **Molecular Thermodynamics**. An implied goal of the effort is to develop criteria for kinds of substances, in terms of molecular characteristics, expected to provide improved COP. This has not yet been addressed in the current approach, which has been phenomenological in nature. The reason is that there is no strong correlation of molecular characteristics with many of the thermodynamic properties that contribute to the COP. Thus the composition dependence of activity coefficients and of heats of mixing may show similar forms whether the interactions arise from ion-ion forces as in simple molten salts, from ion-polarizable ion forces as in more complex molten salts, from ion-dipole forces as in water-salt systems (detailed theory of the limiting law region is not considered here), or from dipole-dipole forces. Thus, a cursory examination of Raoult's Law deviation plots is insufficient to distinguish among systems of salts and water, mixed molten salts, organic liquids, or even intermetallic mixtures. Once the analyses of steps 1 through 4 have been carried out, molecular thermodynamics may become useful in identifying incremental changes of thermodynamic properties in homologous series, possibly including compounds not yet synthesized. As pointed out by Simonson and Pitzer,[25] especially for multicomponent systems, a first principle theory of electrolyte solutions is impractically complex. Instead, simple equations are chosen to represent the data in which the parameters have a general but not precise meaning at the molecular level.

REFERENCES

1. S. I. Kaplan et al, *A Survey and Assessment of Chemical Heat Pumps*, ORNL/TM-9544, Oak Ridge National Laboratory, December 1985.

2. H. Perez-Blanco, Working Mixtures for Industrial Chemical Heat Pumps, *Proceedings of Second BHRA International Symposium on the Large-Scale Applications of Heat Pumps, York, England*, 1984.

3. R. A. Macriss et al, Analysis of Advanced Conceptual Designs for Single Family Size Chillers, Institute of Gas Technology Report to DOE, Contract EG-TI-C-03, 1979.

4. H. Perez-Blanco, Absorption Heat Pump Performance for Different Types of Solution, *Int. J. Refrig.* **7**(2): 115-122 (1984).

5. E. Dietrich, P. LeGoff, and M. Barkaoui, Maximum Value of the Coefficient of Performance of an Absorption Heat Pump, *Entropie* **20**: 8-23 (1984).

6. P. D. Iedema, Mixtures for Absorption Heat Pump, *Int. J. of Refrig.* **5**: 262 (1982).

7. W. M. Raldow and W. E. Wentworth, Chemical Heat Pumps—A Basic Thermodynamic Analysis, *Solar Energy* **23**: 75 (1979).

8. J. Prausnitz, *Molecular Thermodynamics of Fluid Phase Equilibria*, Printice Hall, Englewood, New Jersey, 1969.

9. I. Prigogine and R. Defay, *Chemical Thermodynamics*, Longman's Green, London, 1954, p. 375.

10. H. C. Van Ness and M. M. Abbott, *Classical Thermodynamics of Non-electrolyte Solutions with Applications to Phase Equilibria*, McGraw Hill, New York, 1982.

11. J. Mehling and C. U. Onken, *Vapor-Liquid Equilibrium Data Collection: Aqueous Organic Systems, Chemistry Data Series*, Vol. 1, Part 1, Dechema Publishers, Dortmund, Germany, 1977.

12. G. Nicolaides and C. A. Eckert, Optimal Representation of Binary Liquid Mixture Nonidealities, *Ind. Eng. Chem. Fundam.* **17**: 331 (1978).

13. H. F. Halliwell and L. E. Strong, Obtaining ΔC_p and Its Temperature Coefficients from Equilibrium Constants. A Tested Procedure, *J. Phys. Chem.* **89**: 4137-4146 (1985).

14. A. Fredenslund and P. Rasmussen, From UNIFAC to SUPERFAC and Back? *Fluid Phase Equilibria* **24**: 115-150 (1985).

15. G. Maurer and J. M. Prausnitz, On the Derivation and Extension of the UNIQUAC Equation, *Fluid Phase Equilibria* **2**: 91-99 (1978).

16. K. S. Pitzer, Electrolytes. From Dilute Solutions to Fused Salts, *J. Am. Chem. Soc.* **102**: 2902 (1980).

17. K. S. Pitzer, Ionic Fluids, *J. Phys. Chem.* **88**: 2689-2697 (1984).

18. J. Braunstein, Statistical Thermodynamics of Molten Salts and Concentrated Aqueous Electrolytes, pp. 179-260 in *Ionic Interactions*, Vol. 1, S. Petrucci, ed., Academic Press, New York, 1979.

19. C. P. Hicks, ed., A Bibliography of Thermodynamic Quantities for Binary Fluid Mixtures, Chap. 9 in *Chemical Thermodynamics*, Vol. 2: *A Specialist Periodical Report*, The Chemical Society, London, 1978.

20. W. Linke, *Seidell's Solubilities: Inorganic and Metal Organic Compounds*, American Chemical Society, Vol. 1, 1958; Vol. 2, 1965.

21. A. Tamir, E. Tamir, and K. Stephan, Heats of Phase Change of Pure Components and Mixtures: A Literature Guide, *Physical Sciences Data 14*, Elsevier, Amsterdam, 1983.

22. J. Timmermans, The Physico-chemical Constants of Binary Systems in Concentrated Solutions, Vol. 3, *Systems with Metallic Compounds*, Interscience, N.Y., 1960.

23. F. Bosjankovic, *Technical Thermodynamics*, Holt, Rinehart, and Winston, N.Y., 1965.

24. K. S. Pitzer and J. M. Simonson, Ion Pairing in a System Continuously Miscible from the Fused Salt to Dilute Solution, *J. Amer. Chem. Soc.* **106**: 1973 (1984).

25. J. M. Simonson and K. S. Pitzer, Thermodynamics of Multicomponent, Miscible, Ionic Systems: The System $LiNO_3$-KNO_3-H_2O, *J. Phys. Chem.* **90**: 3009 (1986).

Appendix

A NOVEL APPROACH FOR CYCLE PERFORMANCE PREDICTION

Given a parametric form for the free energy function, it is possible to derive expressions, in terms of those parameters, for the various thermodynamic quantities that occur in a heat pump cycle. These quantities may include the overall coefficient of performance (COP), heats of mixing, vaporization or condensation, or combinations of heat inputs and heat outputs at various points in the cycle. Such expressions facilitate identification of the critical parameters, and thus the critical properties, to which performance (or economics) of the cycle is most sensitive. Although Dietrich et al. have tried to identify critical enthalpy terms, their analysis was not carried through to the coefficients in the equations characterizing the thermodynamic properties.

The following section, taken from a report in preparation by one of the authors of the present report at Oak Ridge National Laboratory, indicates how such identification can be made. Although the analysis is not complete, the section is included to demonstrate the approach. Isothermal enthalpy changes, per mole of refrigerant, are derived for the phase changes (absorption, distillation, condensation and evaporation) occurring at differing temperatures and differing solution compositions in the absorber, generator, condenser, and evaporator. An expression is then derived for the excess of heat, per mole of refrigerant, required to distill refrigerant from the generator, in addition to the heat delivered in the absorber.

In the absorber, at temperature $T_D = T_4$, solution is replenished in refrigerant, $X^- \rightarrow X^+$. The isothermal process may be written

$$R(v) + \text{solution } (X^-) \rightarrow \text{solution } (X^+) \ .$$

For addition of one mole of refrigerant to a solution of n_R moles of refrigerant in n_A moles of absorbent, the enthalpy change, in terms of the partial molar enthalpies of refrigerant and absorbant, $\bar{H}_R$ and $\bar{H}_A$, are

$$\Delta H_{T_D} = (n_R + 1)\ \bar{H}_R\ (X^+, T_4) + n_A \bar{H}_A (X^+, T_4) - n_R \bar{H}_R (X^-, T_4)$$

$$- n_A \bar{H}_A (X^-, T_4) - \bar{H}_R^o (T_4) \ ,$$

$$\Delta H_{T_D} = [\bar{H}_R(X^+, T_4) - \bar{H}_R^o(T_4)] + n_R[\bar{H}_R(X^+,T_4) - \bar{H}_R(X^-,T_4)]$$

$$+ n_A[\bar{H}_A(X^+,T_4) - \bar{H}_A(X^-,T_4)] \ , \tag{A.1}$$

$$\Delta H_{T_D} = -L_R^X(X^+,T_4) + n_R[h_R^E(X^+,T_4) - h_R^E(X^-,T_4)]$$

$$+ n_A[h_R^E(X^+,T_4) - h_R^E(X^-,T_4)] \ ,$$

$$\Delta H_{T_D}^{abs} = -L_R^o(T_4) + h_R^E(X^+,T_4) + n_R\delta_x h_R^E(T_4) + n_A\delta_x h_A^E(T_4) \ ,$$

where $L_R^o(T_4)$ is heat of vaporization of pure refrigerant at temperature T_4, and h_R^E and h_A^E are partial molar excess enthalpies of refrigerant and absorbent in solution, at the composition and temperature indicated in parentheses. The term X^+ is the mole fraction of refrigerant in replenished* solution, and X^- is the mole fraction of refrigerant in the depleted† solution. Since $X^- = n_R/(n_A + n_R)$ and $X^+ = (n_R + 1)/(n_R + 1 + n_A)$, the mole numbers of R and A, per mole of vaporized refrigerant, are

$$n_A = (1 - X^-)(1 - X^+)/(X^+ - X^-) \ , \tag{A.1a}$$

$$n_R = X^-(1 - X^+)/(X^+ - X^-) \ . \tag{A.1b}$$

The operator δ_x indicates the isothermal difference between the excess partial molar enthalpies at the compositions X^+ and X^- at the designated temperature; e.g.,

$$\delta_x h_R^E(T_4) = h_R^E(X^+,T_4) - h_R^E(X^-,T_4) \ . \tag{A.1c}$$

For the reverse, desorption process, at the generator temperature $T_H = T_2$, with a nonvolatile absorbent,

solution $(X^+) \rightarrow$ solution (X^-) + R(v) ,

---

* Leaving absorber and entering generator.

† Leaving generator and entering absorber.

$$\Delta H^{gen}_{T_H} = L^o_R(T_2) - h^E_R(X^+,T_2) - n_R\delta_x h^E_R(T_2) - n_A\delta_x h^E_A(T_2) \ . \qquad (A.2)$$

The heats of vaporization of pure refrigerant [first term on right-hand side of Eqs. 2.1 and 2.2] may be written

$$L^o_R(T_2) = L^o_R(T_{REF}) + (C_{PVR} - C_{PLR})(T_2 - T_{REF})$$

and

$$L^o_R(T_4) = L^o_R(T_{REF}) + (C_{PVR} - C_{PLR})(T_4 - T_{REF}) \ ,$$

where $L^o_R(T_{REF}) = D_{ELHR}$.

In the condenser, at $T_D = T_4$,

$$R(v) \rightarrow R(l) \ ,$$

$$\Delta H^{cond}_{T_D} = -L^o_R(T_D) = -L^o_R(T_{REF}) - (C_{PVR} - C_{PLR})(T_4 - T_{REF}) \ . \qquad (A.3)$$

In the evaporator, at $T_W = T_8$,

$$R(l) \rightarrow R(v) \ ,$$

$$\Delta H^{evap}_{T_W} = L^o_R(T_8) = L^o_R(T_{REF}) + (C_{PVR} - C_{PLR})(T_8 - T_{REF}) \ . \qquad (A.4)$$

In the subsequent equations, $(C_{PVR} - C_{PLR})$ is designated by the constant ΔC_R. Since the results must be independent of T_{REF}, the equations are simplified by eliminating T_{REF} and referring all L^o_R to the value at the lowest temperature of the cycle, $T_W = T_8$. Thus,

$$L^o_R(T_4) = L^o_R(T_{REF}) + (T_4 - T_{REF})\Delta C_R = L^o_R(T_8) + (T_4 - T_8)\Delta C_R \ ,$$

$$L^o_R(T_2) = L^o_R(T_{REF}) + (T_2 - T_{REF})\Delta C_R = L^o_R(T_8) + (T_2 - T_8)\Delta C_R \ ,$$

$$L^o_R(T_8) = L^o_R(T_{REF}) + (T_8 - T_{REF})\Delta C_R = D_{ELHR} + (T_8 - T_{REF})\Delta C_R \ .$$

Thus (noting that $T_H = T_2$, $T_D = T_4$, $T_W = T_8$),

$$\Delta H^{evap}_{T_W} = L^o_R\ (T_W) \tag{A.5}$$

$$\Delta H^{gen}_{T_H} = L^o_R(T_W) + (T_H - T_W)\Delta C_R - h^E_R(X^+, T_H) - n_R\delta_x h^E_R(T_H) - n_A\delta_x h^E_A(T_H) \tag{A.6}$$

$$\Delta H^{cond}_{T_D} = -L^o_R(T_W) - (T_D - T_W)\Delta C_R \tag{A.7}$$

$$\Delta H^{abs}_{T_D} = -L^o_R(T_W) - (T_D - T_W)\Delta C_R + h^E_R(X^+, T_D) + n_R\delta_x h^E_R(T_D) + n_A\delta_x h^E_A(T_D) \tag{A.8}$$

Additional heat terms needed to complete the cycle include the following.

Temperature change of depleted liquid from generator temperature to absorber temperature:

$$h = (n_R + n_A)\ C_{soln\ (X^-)}\ (T_H - T_D)\ ; \tag{A.9}$$

Temperature change of vapor from generator to condenser:

$$h = -C_{PVR}\ (T_H - T_D)\ ; \tag{A.10}$$

Temperature change of replenished solution from absorber to generator:

$$h = (n_A + n_R + 1)\ C_{soln\ (X^+)}\ (T_H - T_D)\ . \tag{A.11}$$

With these equations, differences of heat inputs and outputs in different physical processes in the cycle can be characterized in terms of the parameters that are used to represent the thermodynamic properties. For example, *excess of heat required to distill refrigerant in generator over heat delivered in absorber*:

$$\Delta H^{gen}_{T_H} + \Delta H^{abs}_{T_D} = (T_H - T_D)\Delta C_R + h^E_R(X^+,T_D) - h^E_R(X^+,T_H)$$

$$+ n_R[\delta_x h^E_R(T_D) - \delta_x h^E_R(T_H)] \qquad (A.12)$$

$$+ n_A[\delta_x h_A(T_D) - \delta_x h^E_A(T_H)] \ .$$

Defining $\delta_T h^E_i(X_j) = h^E_i(X_j,T_H) - h^E_i(X_j,T_D)$, Eq. A.12 may be rewritten

$$\Delta H^{gen}_{T_H} + \Delta H^{abs}_{T_D} = (T_H - T_D)\Delta C_R - \delta_T h^E_R(X^+) + n_R[\delta_x h^E_R(T_D) - \delta_x h^E_R(T_H)]$$

$$+ n_A[\delta_x h^E_A(T_D) - \delta_x h^E_A(T_H)] \ .$$

In terms of the parameters of the temperature-dependent Margules equation, the difference may be written

$$\Delta H^{gen}_{T_H} + \Delta H^{abs}_{T_D} = (T_H - T_D)\Big[\Delta C_R + L([1 + 2(\beta - 1)X^+]\ (1 - X^+)^2$$

$$- n_R\{[1 + 2(\beta - 1)X^+](1 - X^+)^2$$

$$- [1 + 2(\beta - 1)X^-](1 - X^-)^2\} \qquad (A.13)$$

$$- n_A\{[\beta - 2(\beta - 1)(1 - X^+)](X^+)^2$$

$$- [\beta - 2(\beta - 1)(1 - X^-)](X^-)^2\})\Big]$$

The terms involving L, $n_R L$, and $n_A L$ in the above equations are the partial molal excess heat capacities (e.g., $L\ [1 + 2(\beta - 1)X^+]\ .(1 - X^+)^2$ is the partial molal excess heat capacity of refrigerant at composition X^+.) The value of the enthalpy interaction parameter K does not appear, nor does D_{ELHR}, the heat of vaporization of refrigerant. For a regular solution, ($\beta = 1$, $L = M = 0$), $\Delta H_{T_H} + \Delta H_{T_D} = (T_H - T_D)\Delta C_R$, as for an ideal solution. Thus the temperature dependence of the enthalpy interaction parameter (given by L) and the composition dependence of the enthalpy interaction parameter (given by β, the asymmetry parameter) lead to differences between the heats of

vaporization in the generator and in the absorber beyond the difference found for an ideal or regular solution.

Other combinations of enthalpy terms in the cycle, and presumably the COP, also may be expressed in terms of the parameters representing the physical properties of the components; such expressions, together with a sensitivity analysis, should prove useful in identifying key parameters for improvement of COP.

INTERNAL DISTRIBUTION

1. M. R. Ally
2. R. L. Anderson
3. S. J. Ball
4. V. D. Baxter
5-8. J. Braunstein
9. R. S. Carlsmith
10. N. C. Chen
11. F. A. Creswick
12. R. C. DeVault
13. N. Domingo
14. P. D. Fairchild
15. F. G. Farrell
16. L. M. Ferris
17. S. K. Fischer
18. W. Fulkerson
19. R. O. Johnson
20. S. I. Kaplan
21. M. A. Kuliasha
22. R. S. Loffman
23. F. C. Maienschein
24. J. F. Martin
25. S. H. McConathy
26. H. A. McLain
27. V. C. Mei
28. R. E. Mesmer
29. H. Perez-Blanco
30. M. L. Poustma
31. C. K. Rice
32. B. K. Seivers
33. P. G. Shipp
34. J. M. Simonson
35. J. J. Tomlinson
36. C. D. West
37-51. Energy Conservation Distribution, Bldg. 9102-2, Room 218
52-53. Central Research Library
54. Document Reference Section
55-56. Laboratory Records–RC
57. Laboratory Records
58. ORNL Patent Office

EXTERNAL DISTRIBUTION

59. W. J. Biermann, 45 Foxcroft Drive, Fayetteville, NY 13066
60. J. M. Calm, Electric Power Research Institute, P. O. Box 10412, 3412 Hillview Avenue, Palo Alto, CA 94303
61. J. G. Carbonell, Associate Professor of Computer Science, Carnegie-Mellon University, Pittsburgh, PA 15213
62. G. Douglas Carver, TVA, 703 Power Building, Chattanooga, TN 37402
63. R. N. Chappell, Program Manager, Energy Conservation Branch, Energy and Technology Division, DOE Idaho Operations Office, 785 DOE Place, Idaho Falls, ID 83402
64. D. C. Erickson, Energy Concepts Company, 627 Ridgely Avenue, Annapolis, MD 21401
65. R. J. Fiskum, Program Manager, Energy Conversion Equipment Branch, CE-132, Room GF-217/FORS, Department of Energy, 1000 Independence Avenue SW, Washington, DC 20585
66. Joel Gilbert, Dames and Moore, Inc., 7101 Wisconsin Avenue, Suite 700, Bethesda, MD 20814

67. S. M. Gillis, Professor, Public Policy and Economics, Duke University, 4875 Duke Station, Durham, NC 27706
68. G. Grossman, Technion Institute of Technology, Faculty of Mechanical Engineering, Haifa, Israel
69. W. T. Hanna, Battelle Columbus Laboratories, 505 King Avenue, Columbus, OH 43201
70. F. C. Hayes, Trane Company, 3600 Pammel Creek Road, LaCrosse, WI 54601
71. F. R. Kalhammer, Vice President, Electric Power Research Institute, P.O. Box 10412, Palo Alto, CA 94303
72. Alan Karp, Electric Power Research Institute, Energy Management and Utilization Division, P.O. Box 10412, Palo Alto, CA 94303
73. R. E. Kasperson, Professor of Government and Geography, Graduate School of Geography, Clark University, Worcester, MA 01610
74. M. Lessen, Consulting Engineer, 12 Country Club Drive, Rochester, NY 14618
75. R. Macriss, Institute of Gas Technology, 3424 South State Street, Chicago, IL 60616
76. L. A. McNeely, 7310 Steinmeier Drive, Indianapolis, IN 46250
77. D. K. Miller, Borg-Warner Air Conditioning, Inc., P.O. Box 1592, York, PA 17405
78. J. I. Mills, EG&G Idaho, Inc., P.O. Box 1625-WCB, Idaho Falls, ID 83415
79. B. A. Phillips, Phillips Engineering Company, 721 Pleasant Street, St. Joseph, MI 49085
80. R. Radermacher, University of Maryland, Mechanical Engineering Department, College Park, MD 20742
81. W. J. Rebello, PAR Enterprises, 11928 Appling Valley Road, Fairfax, VA 22030
82. R. C. Reimann, Carrier Corporation, P. O. Box 4808, Syracuse, NY 13221
83. S. L. Richlen, Office of Industrial Programs, CE-141, FORSTL, Department of Energy, 1000 Independence Avenue SW, Washington, DC 20585
84. U. Rockenfeller, Rocky Research Company, 1453 Rawhide Road, Boulder City, NV 89005
85. J. D. Ryan, Energy Conversion Equipment Branch, CE-132, FORSTL, Department of Energy, 1000 Independence Avenue SW, Washington, DC 20585
86. D. S. Severson, Gas Research Institute, 8800 West Bryn Mawr Avenue, Chicago, IL 60631
87. S. V. Shelton, Department of Mechanical Engineering, Georgia Institute of Technology, Atlanta, GA 30332
88. T. B. Tripp, NRC Inc., 45 Industrial Place, Newton, MA 02164
89. J. J. Tuzson, Gas Research Institute, 8800 West Bryn Mawr Avenue, Chicago, IL 60631

90. G. C. Vliet, Taylor Hall 116, The University of Texas, Austin, TX 78712
91. M. Wahlig, Lawrence Berkeley Laboratory, University of California, Berkeley, CA 94720
92. Office of the Assistant Manager for Energy R&D, U.S. Department of Energy, Oak Ridge Operations, Oak Ridge, TN 37831

93-122. Technical Information Center, U.S. Department of Energy, P.O. Box 62, Oak Ridge, TN 37831

☆U.S. GOVERNMENT PRINTING OFFICE 1987—748-168/60008