MARTIN MARIETTA ENERGY SYSTEMS LIBRARIES
3 4456 0153630 0

ORNL/TM-10261

ornl

OAK RIDGE NATIONAL LABORATORY

MARTIN MARIETTA

Demonstration of the Iodine and NO_x Removal Systems in the Oak Ridge National Laboratory Integrated Equipment Test Facility

B. E. Lewis
R. T. Jubin

OAK RIDGE NATIONAL LABORATORY
CENTRAL RESEARCH LIBRARY
CIRCULATION SECTION
4500N ROOM 175
LIBRARY LOAN COPY
DO NOT TRANSFER TO ANOTHER PERSON
If you wish someone else to see this report, send in name with report and the library will arrange a loan.

CONSOLIDATED FUEL REPROCESSING PROGRAM

OPERATED BY
MARTIN MARIETTA ENERGY SYSTEMS, INC.
FOR THE UNITED STATES
DEPARTMENT OF ENERGY

Printed in the United States of America. Available from
National Technical Information Service
U.S. Department of Commerce
5285 Port Royal Road, Springfield, Virginia 22161
NTIS price codes—Printed Copy: A03 Microfiche A01

This report was prepared as an account of work sponsored by an agency of the United States Government. Neither the United States Government nor any agency thereof, nor any of their employees, makes any warranty, express or implied, or assumes any legal liability or responsibility for the accuracy, completeness, or usefulness of any information, apparatus, product, or process disclosed, or represents that its use would not infringe privately owned rights. Reference herein to any specific commercial product, process, or service by trade name, trademark, manufacturer, or otherwise, does not necessarily constitute or imply its endorsement, recommendation, or favoring by the United States Government or any agency thereof. The views and opinions of authors expressed herein do not necessarily state or reflect those of the United States Government or any agency thereof.

ORNL/TM-10261
Dist. Category UC-86

Consolidated Fuel Reprocessing Program

DEMONSTRATION OF THE IODINE AND NO_x REMOVAL SYSTEMS IN THE OAK RIDGE NATIONAL LABORATORY INTEGRATED EQUIPMENT TEST FACILITY

B. E. Lewis
R. T. Jubin

Fuel Recycle Division

Date Published: March 1987

Prepared for the
Office of Facilities, Fuel Cycle,
and Test Programs

Prepared by the
OAK RIDGE NATIONAL LABORATORY
Oak Ridge, Tennessee 37831
operated by
MARTIN MARIETTA ENERGY SYSTEMS, INC.
for the
U.S. DEPARTMENT OF ENERGY
under Contract No. DE-AC05-84OR21400

MARTIN MARIETTA ENERGY SYSTEMS LIBRARIES
3 4456 0153630 0

CONTENTS

ABSTRACT v

1. INTRODUCTION 1

2. THE DUAL CONDENSER DESIGN 3

3. IODINE DISTRIBUTION COEFFICIENTS 5

4. DESCRIPTION OF EXPERIMENTS 7
   - 4.1 Phase One 7
   - 4.2 Phase Two 7
   - 4.3 Phase Three 9

5. DISCUSSION OF RESULTS 19
   - 5.1 Phase One 19
   - 5.2 Phase Two 19
   - 5.3 Phase Three 23

6. CONCLUSIONS 29

REFERENCES 31

ABSTRACT

This report summarizes the findings from three sets of experiments on iodine and NO_x removal performance using dual downdraft condensers in the dissolver off-gas line. The initial experiments were conducted in the laboratory using glassware in proof-of-principle tests. Two additional sets of condenser experiments were conducted using equipment prototypical for a 0.5-t/d plant in the Integrated Equipment Test (IET) facility at the Oak Ridge National Laboratory. This report also describes the NO_x removal performance of a packed scrubber in the IET during the dissolution of depleted uranium oxides.

The overall iodine pass-through efficiency of the condensers in the IET was high as desired. Removal efficiencies ranged from only 0.35 to 6.29%, indicating that the bulk of the iodine in the off-gas will be transferred on through the condensers to the Iodox process for final disposal rather than recycled to the dissolver. The optimum operating temperature for the first condenser was in the range of 50 to 70°C, with the temperature of the second condenser held near 20°C.

The NO_x removal performance of the combined dual condensers and packed scrubber resulted in effluent off-gas stream NO_x compositions of ~0.4 to 1.0%, which are acceptable levels for the Iodox process. The NO_x removal efficiency of the condensers ranged from ~5 to 58%, but was generally around 20%. The removal efficiency of the packed tower scrubber was observed to be in the range of 40 to 60%. The NO_x removal performance of the condensers tended to complement the performance of the scrubber in that the condenser removal efficiency was high when the scrubber efficiency was low and vice versa.

1. INTRODUCTION

As part of the Consolidated Fuel Reprocessing Program, the Integrated Equipment Test (IET) facility, which was conceived in 1976 for developing and demonstrating both process and remote maintenance features of a modern fuel reprocessing facility, was completed and became fully operational in 1984. The IET facility has two major demonstration areas, the Integrated Process Demonstration (IPD) and Remote Operations and Maintenance Demonstration (ROMD).

The overall objective of the IPD is to demonstrate the integrated operation of separately developed equipment and processes prototypical of those expected to be deployed in advanced reprocessing plants. The IPD engineering-scale process equipment simulates all the head-end operations through the first cycle of a modified Purex flowsheet.

Within the scope of the IPD is the demonstration of an integrated dissolver off-gas (DOG) system to treat the gaseous products from a 0.5-t/d continuous rotary dissolver. The off-gas equipment includes a novel dual overhead condenser system, a NO_x removal system, and a full-scale iodine oxidation (Iodox) and recovery system.

The primary component of the dissolution system is the continuous rotary dissolver. The dissolver will be operated at a temperature near the boiling point of the feed solutions (~95 to 100°C) with both cell-gas inleakage and purge gas from the shear and hulls receiver. Therefore, at high gas throughput rates, the liquid loss from the dissolver and digesters due to evaporation and gas saturation may be large. Furthermore, as a result of the dissolution reactions and the presence of NO_x, iodine is liberated in the dissolution system. It is desirable to transport the iodine to the Iodox process via the DOG. It is also desirable to recycle the condensate from the DOG back to the dissolution system to maintain the heavy-metal composition in the digester tanks and to improve acid utilization.

To accomplish these tasks, a dual overhead condenser system to return condensate to the dissolver was chosen. Equilibrium calculations indicated that the dual condenser design could be operated to minimize iodine recycle and the throughput of H_2O and HNO_3. The effectiveness of this design has been tested in bench-scale experiments, but it has not been (prior to this work) verified on a pilot-plant scale using prototypical feed streams and equipment.

Once the DOG has passed through the dual condensers, it is routed through a packed-bed NO_x absorption tower designed to reduce the NO_x level to ~1%. The tower is provided with an iodine stripper that can be used to revolatilize the iodine from the acid scrub solution. The iodine-laden off-gas is then routed to the Iodox system for iodine recovery and disposal.

The development of the Iodox system was carried out at ORNL through engineering-scale tests using a 4-in.-diam Pyrex column containing eight bubble-cap trays. Following successful testing of this unit, the design was scaled up to the current 10-in.-diam column in the IET facility. The total number of stages was reduced to six, which still allows the complete demonstration of Iodox with only a slight reduction in the total iodine decontamination factor.

While the capital cost of the Iodox system would probably preclude its use in small reprocessing facilities (<0.2 t/d), its use appears to be advantageous in larger facilities where it would be used to remove the gross iodine loads from the DOG. This type of application would not require a large number of stages because a chemisorption process using a silver mordenite could be used as a final iodine removal step.

Experiments were conducted in the IPD facility with the objectives of (1) evaluating the performance of the double overhead condenser design for the recycle of condensate and passage of iodine in the DOG, (2) determining the saturation levels and concentration of condensables in the off-gas from the rotary dissolver under a variety of conditions including the dissolution of both UO_2 and U_3O_8, (3) using the data obtained from the NO_x system to verify column design, and (4) performing total-system iodine and acid material balances. This report describes the results from these tests.

2. THE DUAL CONDENSER DESIGN

The use of two condensers in series in the DOG system originated during the preconceptual design phase for the Breeder Reprocessing Engineering Test (BRET) facility, which was to have been built to process spent breeder reactor fuel from the Fast Flux Test Facility (FFTF) and the proposed Clinch River Breeder Reactor (CRBR). With the demise of the CRBR, the BRET project has been placed on indefinite hold. The BRET facility was to have been built in Richland, Washington, and was sized to handle a maximum of 0.1 t/d of heavy metal. The plans included a low-flow ventilation system and complete treatment of the DOG. The DOG was to be limited to ~15 scfm with the shear inleakage and digester agitation sparges contributing ~80% of the total DOG volume. Calculations based on the limited throughput of fuel into the rotary dissolver and relatively uniform off-gas evolution indicated that the DOG would contain a maximum of 1 to 2% NO_x. In general, the expected effluent from a relatively well-designed NO_x scrubber is on the order of 1%, and minimal deleterious effects on the Iodox process are expected if the NO_x level is held below ~2%. Therefore, little benefit was expected from the use of an NO_x scrubber other than to cool the DOG prior to introducing it into Iodox. Cooling of the DOG is needed to reduce the water content via condensation so as not to dilute the hyperazeotropic HNO_3 used in the Iodox system and seriously degrade the iodine decontamination factor (DF) on the lower stages.

If the DOG is cooled to ~20°C in a stepwise manner, ~99% of the water and acid vapor can be returned as condensate to the dissolver without recycling large quantities of iodine. Use of the condensers to recycle water and acid vapor and cool the gas can result in considerable cost savings by eliminating the NO_x scrubber and all of its associated equipment. Thus, this design and development effort was undertaken.

3. IODINE DISTRIBUTION COEFFICIENTS

Iodine liquid/gas distribution coefficients were determined from Fig. 1, taken from ref. 1. Equation (1) is a fit to this data below 6 *M* HNO_3 in the condensed phase. The iodine distribution coefficients at various temperatures and acid concentrations can be determined by:

$$\ln \alpha = [4793.4 - 150.9\,(M)]\,\frac{1}{T} + 0.547\,(M) - 11.886 \qquad (1)$$

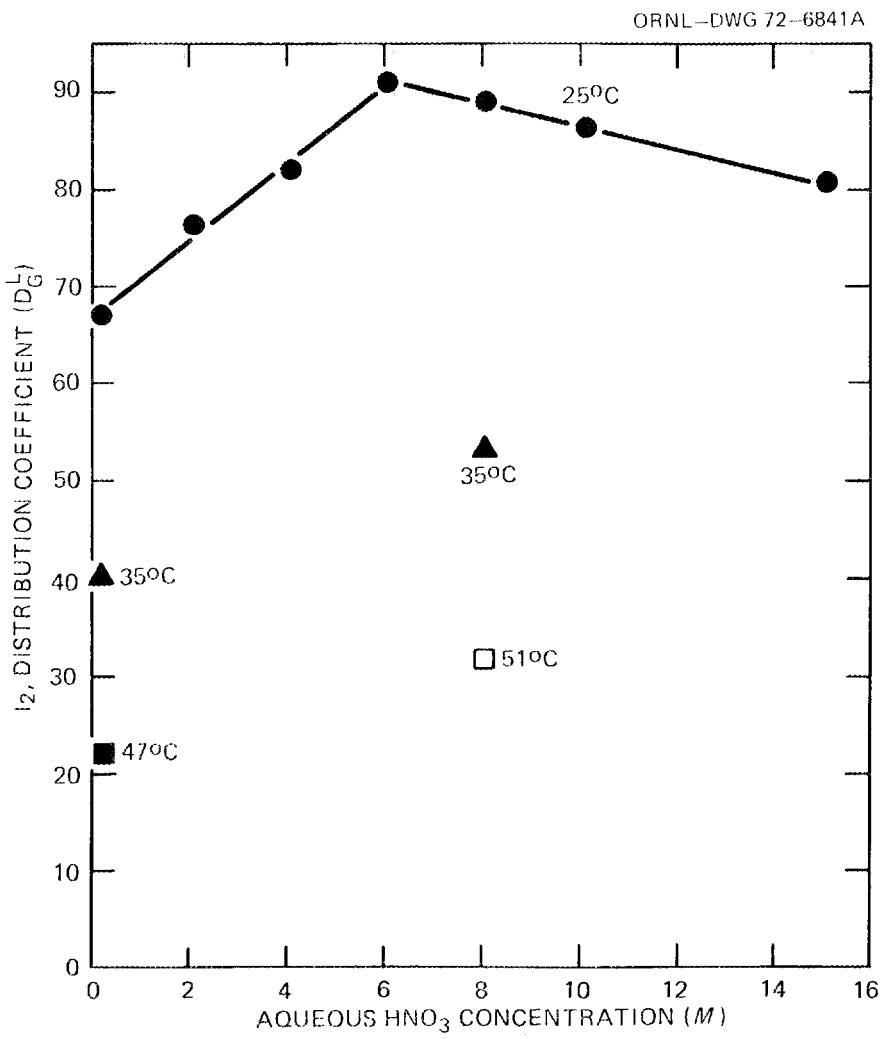

Fig. 1. Effect of acid concentration and temperature on the distribution of I_2 between air and nitric acid.

where

α = distribution coefficient for I_2, $\frac{(\text{mole } I_2/L)_{liq}}{(\text{mole } I_2/L)_{gas}}$,

T = temperature (°K),

M = acid concentration in liquid phase (moles HNO_3/L).

Calculations based on the use of the iodine distribution coefficients showed that two condensers in series operated at ~60 and 20°C could achieve excellent separation between the water/acid condensate and iodine. With the first condenser operated at 60°C, the bulk of the water is recycled (~93% of the condensables discharged from the dissolver and digester tanks), while ~96.5% of the iodine is passed on through to the second condenser, which removes an additional 6% of the total water as it cools the DOG to 20°C. At this lower temperature, the iodine DF is increased by a factor of 6; however, with the limited amount of condensate, the iodine recycle from the second condenser is ~1.5% of the total feed to the system. Thus, >99% of the water/acid vapor is recycled, while only ~5% of the iodine is recycled.

4. DESCRIPTION OF EXPERIMENTS

The experimental program, to date, has completed three phases. The first phase was the demonstration of the dual condenser operation on a simulated off-gas stream in the laboratory. This was followed by a demonstration of full-scale condenser operation using the IPD facility. The third phase incorporated the combined operation of the dissolver, condensers, and NO_x tower, while feeding either sheared UO_2 fuel assemblies or U_3O_8 powder and simulated fuel hulls and wires to the dissolver. The first and second phases examined the behavior of iodine primarily, while the third phase focused on NO_x removal characteristics.

4.1 PHASE ONE

The first phase of this work was conducted in a chemical fume hood using a glass boiling flask filled with 3 *M* HNO_3 to simulate the dissolver. Two glass downdraft condensers were operated in the off-gas line from the dissolver at various temperatures by controlling the cooling water flow. Iodine was introduced to the dissolver as KI. The dissolver temperature was maintained at 95°C by an electrical heating mantle. A 1-L/min air stream was introduced into the gas space above the liquid in the dissolver. A series of temperature combinations for the two condensers were examined to verify the iodine transport characteristics on such a system. The first condenser was operated at either 60 or 70°C, while the second was operated at either 20 or 40°C.

A higher total iodine retention in the condensate was observed when the first condenser was operated at 60°C. This is directly attributable to the higher condensation rate in the second condenser coupled with the higher I_2 DF at the low temperature. In addition, the data showed, as was expected, that the lower the second condenser temperature, the higher the I_2 retention in the condensate.

Results from the scoping tests in the first phase indicated that the concept of using a dual condenser system was, in fact, viable. The bench-top experiments qualitatively verified that the bulk iodine transport would be through the condensers and on to the NO_x scrubber and/or the Iodox process.

4.2 PHASE TWO

The second phase of this work was done to confirm the performance of the double overhead condensers (DOC) for iodine transport using the pilot-plant-scale (0.5-t/d) equipment in the IPD. The equipment used in this experiment consisted of the continuous rotary dissolver; two seal pots to isolate the DOG from the rest of the process; two downdraft condensers; a packed-tower caustic scrubber to trap the iodine from the off-gas; five sampling stations; and the associated piping, tankage, and pumps to operate the system. The continuous dissolver was fed with both 3 *M* HNO_3 and a KI-$NaNO_2$ solution. The KI-$NaNO_2$ feed-stock solution was kept slightly basic to maintain the

iodine in solution before being fed to the dissolver. The system was operated in the absence of UO_2 dissolution to provide baseline data on the performance of the dissolver-condenser system. The sodium nitrite added to the KI feed stream provided additional oxidant to ensure that the iodine was liberated from the dissolver solution. The dissolver contained ~33.6 kg of simulated, sheared stainless steel hulls and shroud material and was operated at 95 to 100°C. The sheared stainless steel remained in the dissolver throughout the experiments to provide a prototypical amount of wetted surface area for gas-liquid contact.

The experiments required several equipment modifications to the IPD dissolution system. Two single-pass, stainless steel, shell-and-tube condensers were installed in series in the DOG line as shown in Fig. 2. The condensers were installed vertically for a downdraft mode of operation as

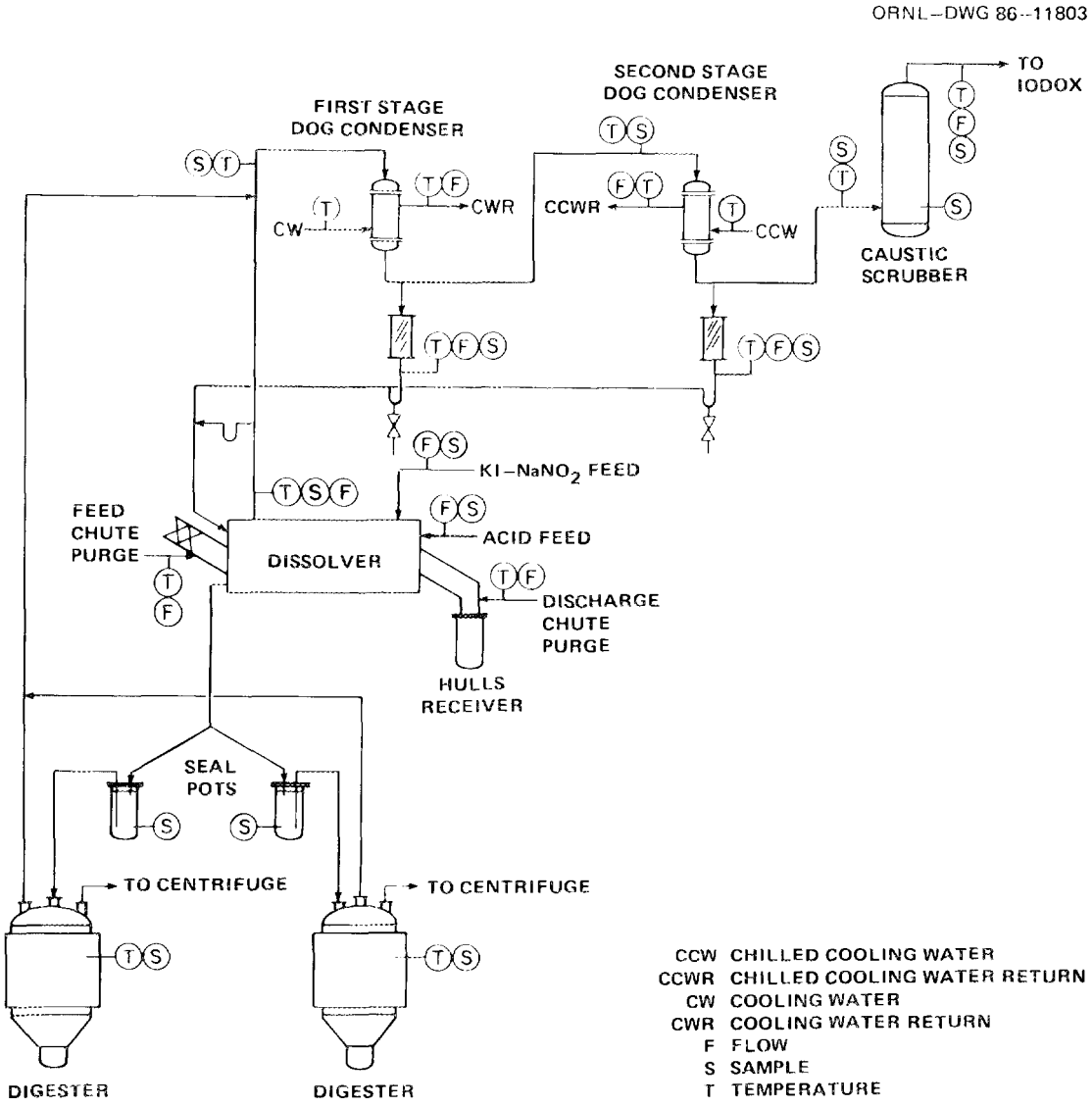

Fig. 2. Flow diagram and data collection points for the DOG iodine removal efficiency experiment.

shown in Fig. 3. Each condenser was ~6 in. in diameter and contained 31-3/4 in.-diam, 4-ft-long tubes. Two seal pots (Fig. 4) were installed in the DOG piping to ensure that the off-gas fed to the condensers originated in the dissolver. A known flow of air was metered to either the solids discharge or solids feed end of the dissolver to study the effect of gas rate and point of origin on the saturation level of the off-gas and the performance of the condensers. The NO_x scrubber, which normally receives the DOG, was converted to a caustic scrubber to contain and isolate the iodine from the rest of the off-gas system. Gas samples were taken at the dissolver, from the feed to the first condenser, from the outlet from the first condenser, from the outlet from the second condenser, and downstream of the caustic scrubber. The gas samples for iodine analysis were taken by passing a known flow rate of off-gas for a measured length of time through a bubble tower containing 200 mL of 0.1 *N* KOH. The gas-sampling station with a bubble tower in place is shown in Fig. 5. A vacuum pump preceded by an ice bath was used to pull the gas sample through the bubble tower. Stainless steel tubing was used to connect the gas-sampling stations with the operating equipment located several feet away as shown in Fig. 3. The sample lines were wrapped with heat tape to maintain the off-gas above its dew point. The bubbler solution containing the iodine gas sample was treated with urea to destroy any NO_x trapped in the KOH and then titrated with sodium thiosulfate to determine the total iodine content.

All liquid samples were analyzed for total HNO_3 and iodine. The HNO_3 analysis was done by simple titration, and the iodine analysis procedure was the same as for the gas samples. Condensate flow rates from the condensers were determined from level measurements using the sight glasses in the liquid seals at the base of the condensers shown in Figs. 2 and 3 by measuring the time interval for the level to rise a given distance in each sight glass. Liquid samples were taken from the dissolver product, KI feed solution, and condensate from each condenser. A complete sample and data collection list for the phase-two experiments is given in Table 1.

4.3 PHASE THREE

The third phase of this work was linked to an integrated run of the IET facility. During the initial portion of the run, the rotary dissolver was operated with simulated feed from the dissolver feed station to prepare three digester batches. An overhead view of the dissolver, shear, and feed station is shown in Fig. 6. The solids feed during this period consisted of U_3O_8 powder and simulated fuel segment hulls. The feed constituents were added in proportionate amounts at timed intervals that simulated the feed rate from the shear. Solids feed to the dissolver was interrupted during each simulated shear-reload period.

After the initial U_3O_8 start-up period, actual shearing of bundles of dummy fuel pins containing sintered UO_2 pellets in Zircaloy tubing, prepared as simulations of CRBR blanket assemblies, began. Each of the fuel bundles consisted of 58 fuel pins and contained 62.5 kg of uranium (depleted in ^{235}U). Each bundle was sheared into 1-in. segments during a 180-min operating cycle. A period of about 72 min of this cycle was allocated for reloading the shear with the next fuel bundle.

After a predetermined number of bundles were sheared, the dissolver was switched back to simulated feed from the feed station. Each digester batch contained 125 kg of uranium from two sheared fuel-pin bundles. Nitric acid and water feed to the dissolver were based on the complete dissolution of this quantity of uranium (as either UO_2 or U_3O_8), resulting in a solution containing ~2.6 *M* free nitric acid. The acid and water were fed continuously during the solid-feed period and

ORNL–PHOTO 0490–86A

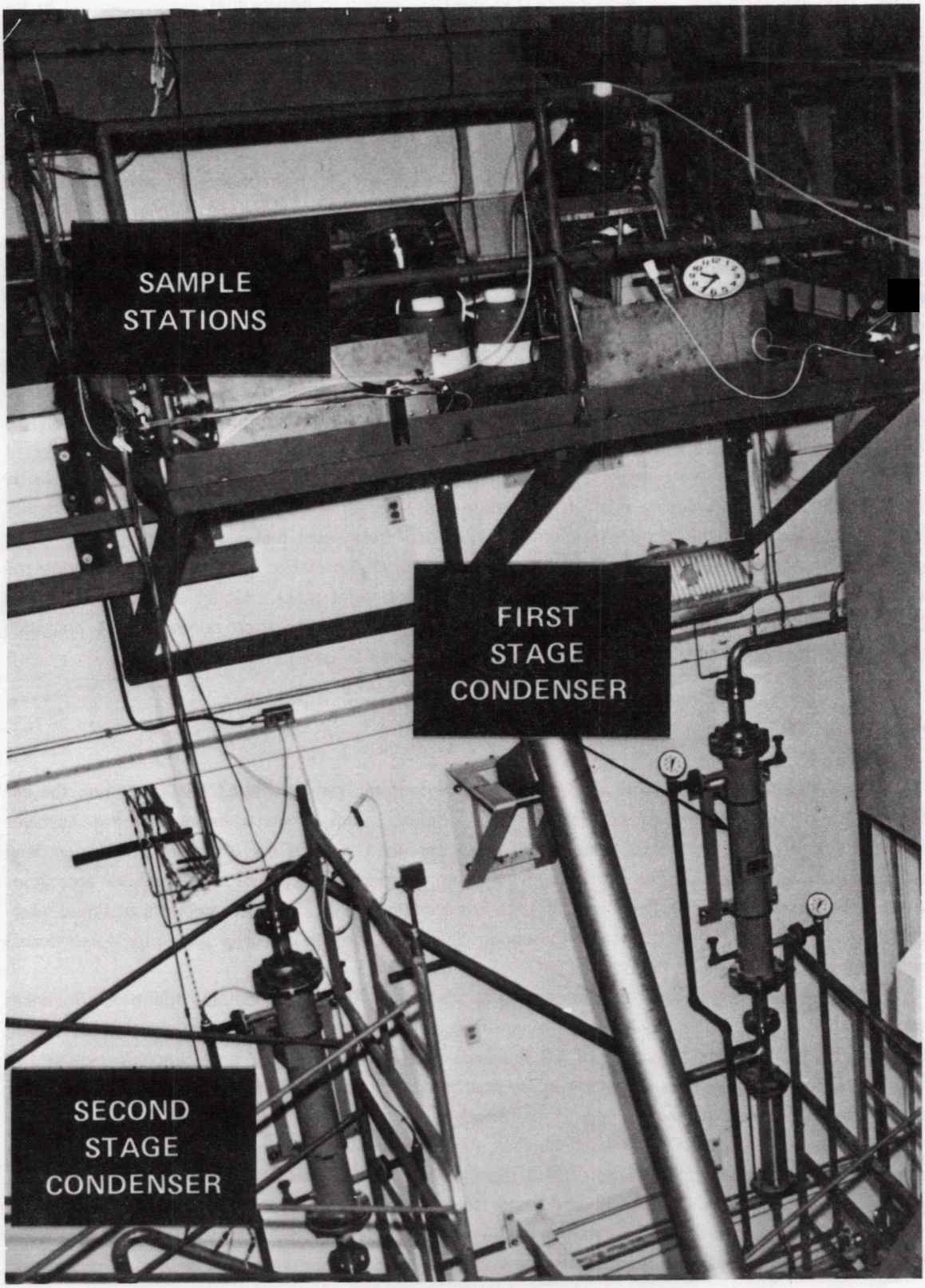

Fig. 3. Condenser orientation.

ORNL–PHOTO 0492–86

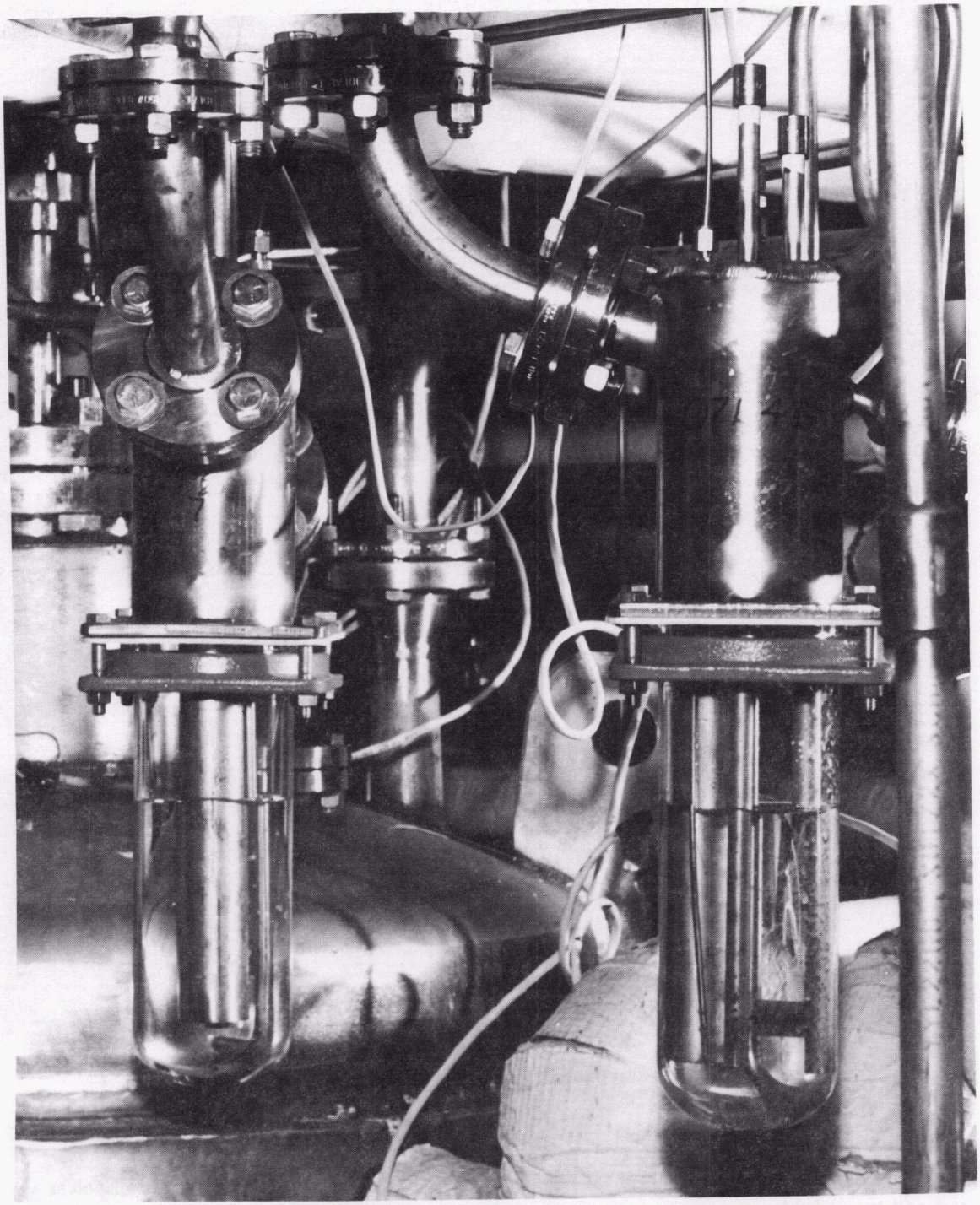

Fig. 4. Seal pots used to isolate the DOG from the digester tank off-gas.

ORNL–PHOTO 0488–86

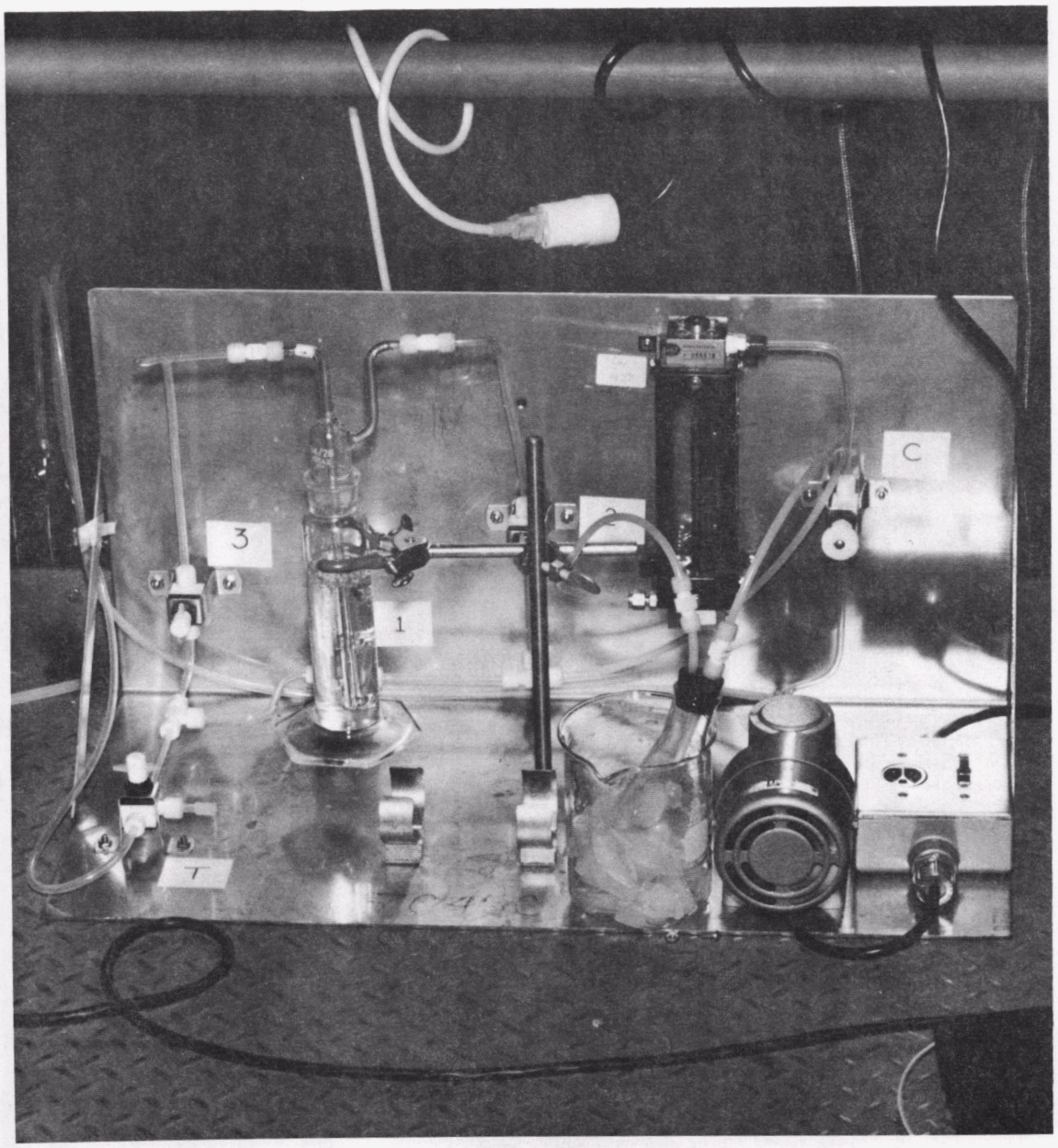

Fig. 5. Gas-sampling station with bubble tower installed.

extended about 30 min into the shear-reloading period. Aqueous flow rates to the dissolver were reduced to minimal values during the balance of the shear-reload period. The rate at which uranium was fed to the dissolver corresponded to a 500-kg/d capability. In this phase, no KI solution was introduced, and only NO_x was tracked through the off-gas system. All the sample and measurement points for the phase-three tests are shown in Fig. 7.

Gas samples were taken from three locations in the phase-three NO_x scrubbing experiments. The same gas-sampling stations used in the phase-two experiments were used in the phase-three

Table 1. Data collection and sample summary for the phase-two iodine recycle experiments

Location	Time	Volume	Temperature	Flow	Sample	Semi-continuous[a]	Once every 2 hours	At start	At end
Dissolver acid feed	X		X	X		X			
					X			X	X
Discharge chute purge	X		X	X			X		
Feed chute purge	X		X	X			X		
Digester 1 solution	X	X	X		X		X		
Digester 2 solution	X	X	X		X		X		
DOG	X		X	X		X			
					X		X		
1st-stage condenser off-gas feed	X		X		X		X		
2d-stage condenser off-gas feed	X		X			X			
					X		X		
1st-stage condensate return	X		X	X	X		X		
2d-stage condensate return	X		X	X	X		X		
1st-stage condenser cooling water feed	X		X				X		
1st-stage condenser cooling water exit	X		X	X			X		
2d-stage condenser cooling water feed	X		X				X		
2d-stage condenser cooling water exit	X		X	X			X		
DOG to NO_x scrubber	X		X		X		X		
Dissolver product	X		X		X		X		
KI feed	X		X	X	X			X	X

[a]Automatically recorded by process control computer network.

tests. Gas samples were taken from the feed to the first condenser, the outlet from the second condenser, and the outlet from the NO_x scrubber.

The gas-sampling loop shown in Fig. 8 consisted of a 250-mL gas bomb through which the off-gas was drawn by a vacuum pump, which returned the gas to the system just downstream of the withdrawal point. A 0.0°C cold trap was placed between the gas bomb and pump, as in the phase-two experiments, to protect the pump from acid vapors and condensate. At predetermined times in the dissolver cycle, the DOG was circulated through the sampling system via the vacuum pump at a rate of ~1 L/min. After 5 min, the bomb was valved out of the system, starting at the vacuum pump end. This allowed the bomb to reach the system pressure prior to closing the second valve. Two samples were taken at each sampling station to allow analysis for total NO_x and NO_2. The NO_x analysis procedure consisted of injecting a 3% solution of peroxide into the gas-sample bombs to oxidize all the NO_x to NO_3. The resulting liquid was then titrated using a standard base solution to arrive at the total nitrate concentration in the sample. The NO_2 analysis was accomplished by treating the second gas sample with 1 *N* KOH and then using colorimetric

ORNL–PHOTO 4591–84A

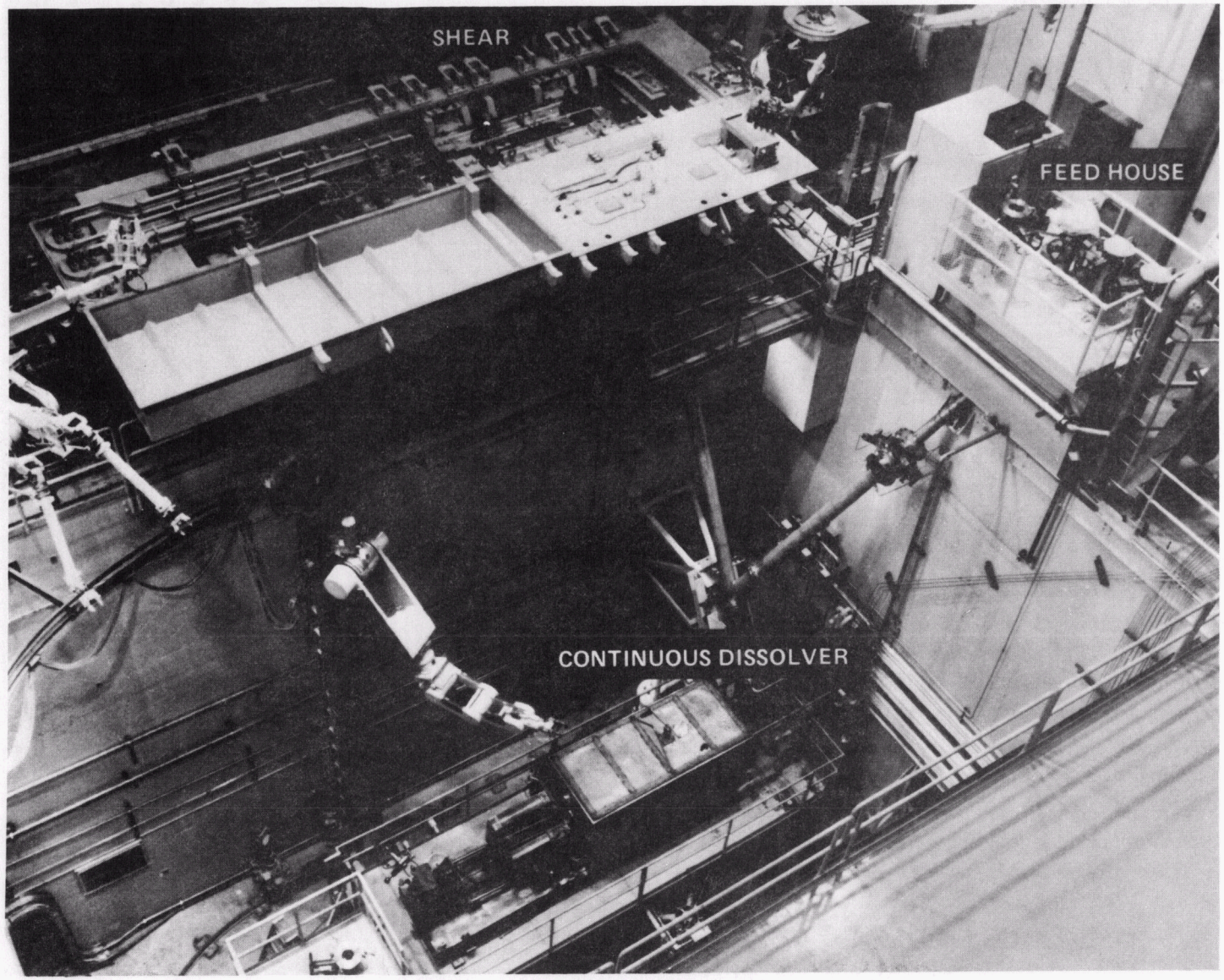

Fig. 6. Overhead view of the dissolver, shear, and feed station.

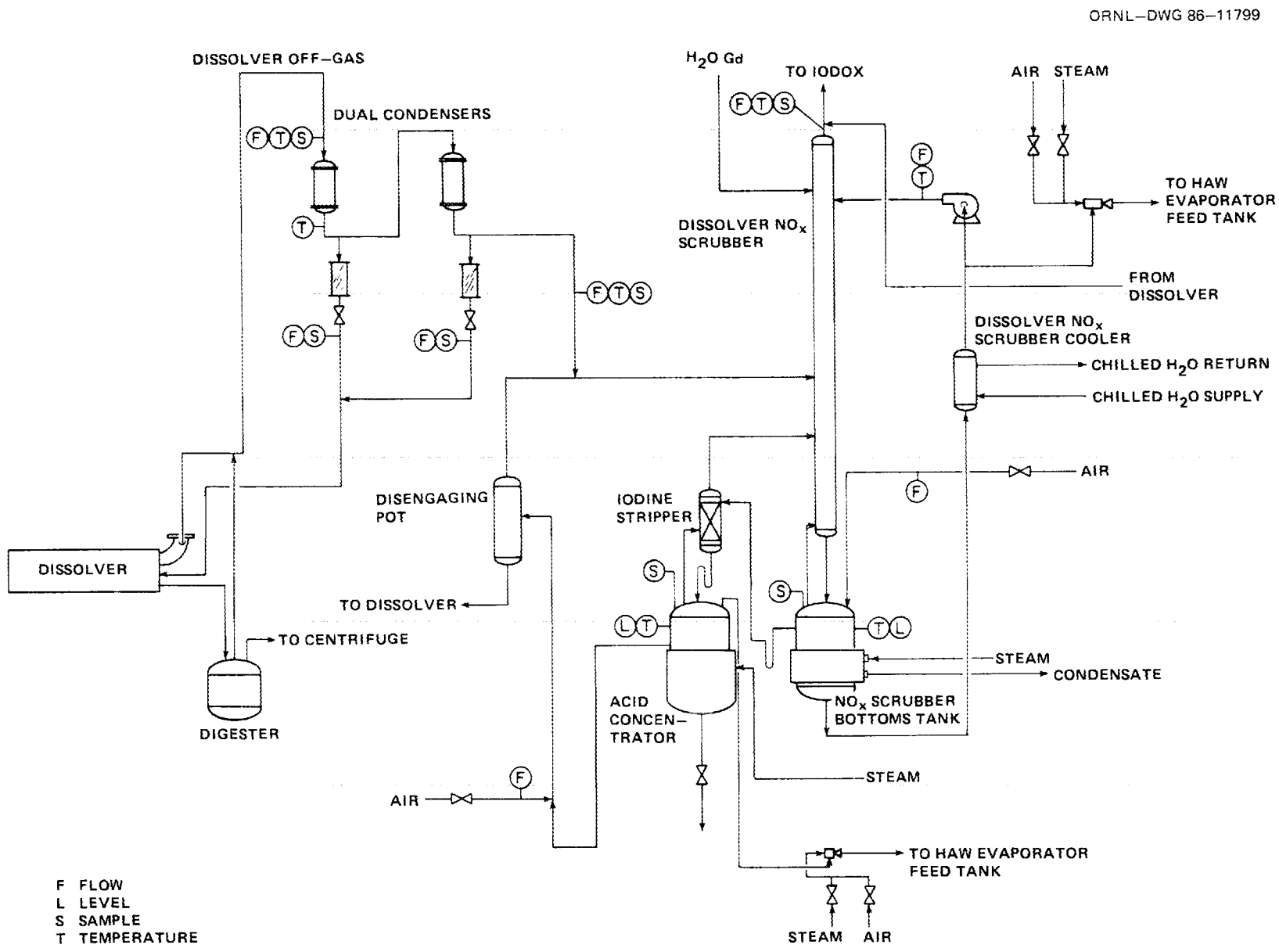

Fig. 7. Schematic of IET dissolver, NO_x scrubber, and supporting equipment.

ORNL–PHOTO 0489–86

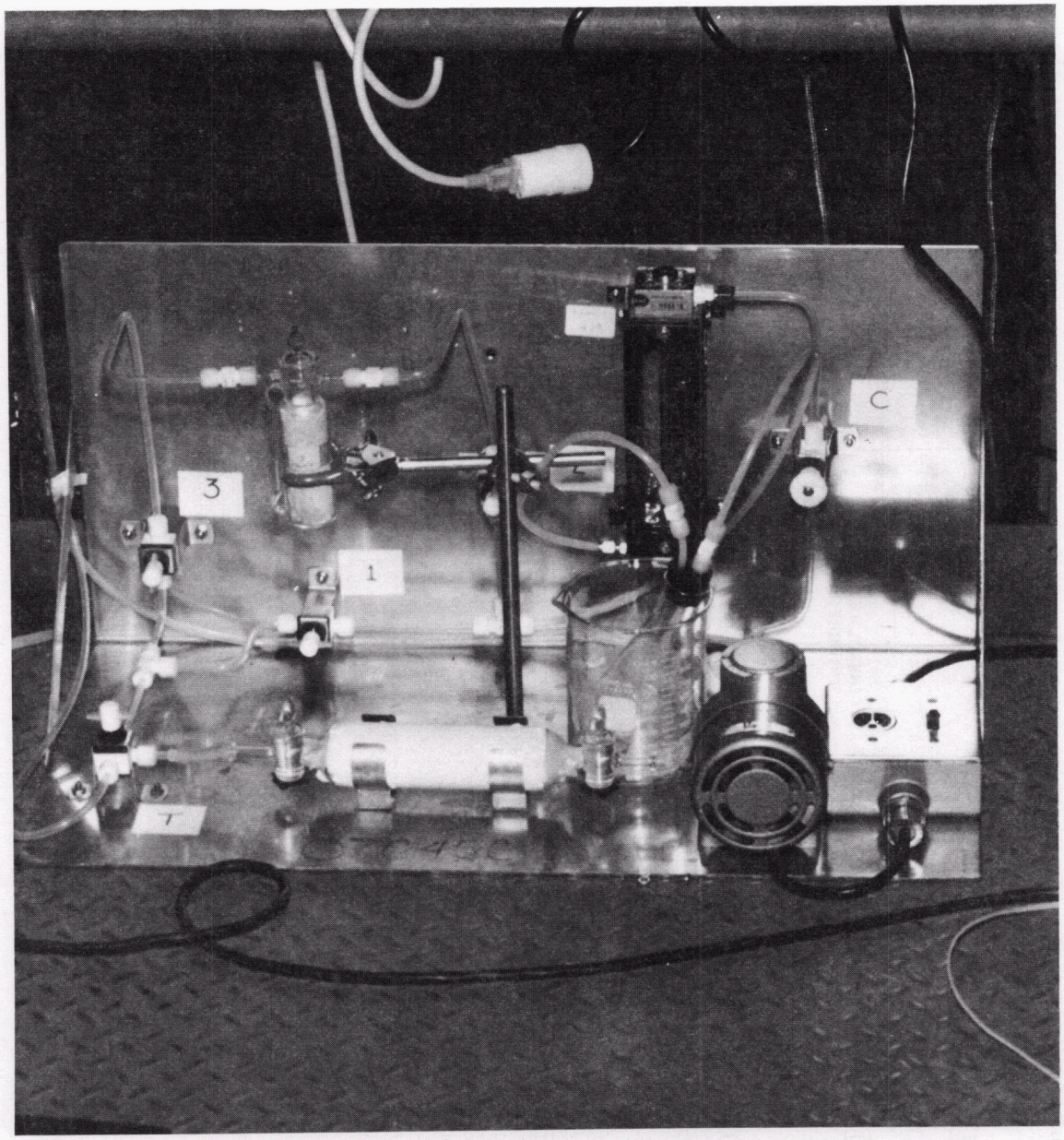

Fig. 8. Gas-sampling station with gas sample bomb and drying tower installed.

techniques sensitive to microgram quantities of NO_2 to prepare the sample for spectrophotometric analysis.

The flow rate of condensate from each condenser was determined using the sight glasses in the liquid seals from the condensers in the same manner as in the phase-two experiments.

Liquid samples were taken from the condensate from both condensers and the scrubber bottoms tank. The samples were collected in 50-mL bottles, which were filled to the top to minimize the gas volume and reduce the extent of the gas-phase reactions converting NO to NO_2. These

samples were analyzed for HNO_3 and HNO_2. The HNO_3 analysis was performed using standard base titration methods. The HNO_2 analysis was effected using the same procedures as for the NO_2 analysis for the gas samples, except that colorimetric techniques sensitive to milligram quantities instead of microgram quantities were used because of the larger amount of NO_2 present in the liquid samples.

The overall goal of this set of experiments was to reach steady-state operation during the dissolution of either U_3O_8 or UO_2. The data collection and sample plan for the phase-three experiments is summarized in Table 2.

Table 2. Data collection and sample plan for phase-three experiments

Location	Time	Volume	Temperature	Flow	Sample	Frequency		
						Semi-continuous[a]	At start	At end
Air to acid concentrator air lift	X			X		X		
Acid concentrator	X		X		X	X	X	X
Off-gas from NO_x scrubber	X		X	X	X	X		
NO_x scrubber recycle	X		X	X		X		
Scrubber bottom	X	X	X		X	X	X	X
Scrubber bottom sparge	X			X		X		
DOG to 1st condenser	X		X	X	X	X		
DOG to NO_x scrubber	X		X		X	X		
Condensate from 1st condenser	X		X	X	X	X		
Condensate from 2d condenser	X		X	X	X	X		

[a]Semicontinuous means to withdraw samples according to the following schedule:

1. At start of run—prior to adding U_3O_8 or UO_2 to dissolver, but with equipment running.
2. At end of first U_3O_8 feed period.
3. At beginning of second U_3O_8 feed period.
4. At end of second U_3O_8 feed period.
5. At beginning of third U_3O_8 feed period.
6. At end of fourth U_3O_8 feed period.
7. At end of sixth U_3O_8 feed period.
8. At end of first UO_2 feed period.
9. At beginning of second UO_2 feed period.
10. At end of second UO_2 feed period.
11. At beginning of third UO_2 feed period.
12. At end of fourth UO_2 feed period.
13. At end of sixth UO_2 feed period.
14. At end of UO_2 feed period.
15. End of every fourth feed period, thereafter, where "end" means during the last few minutes of the period but prior to the actual end of the cycle.

5. DISCUSSION OF RESULTS

5.1 PHASE ONE

The results from the phase-one experiments served to verify the utility of the iodine distribution coefficient data because the performance of the condensers at the various operating temperatures was in agreement with the predictions from Eq. (1). These experiments also qualitatively verified that the bulk of the iodine transport would be through the dual condensers and on to the NO_x scrubber and/or the Iodox process.

5.2 PHASE TWO

The iodine flow rates through the system are given in Table 3. The feed rate to the dissolver, based on chemical analysis of the feed stock, was significantly lower in most cases than that determined from a material balance around the system. The calculated feed rate was determined using the iodine concentration measurements for the off-gas from the second condenser, the condensate from the condensers, and the dissolver product. It is believed that the difference between the material balance feed rate and chemical analysis feed rate was a result of discrepancies in either the feed makeup analysis or the feed flow rate measurement.

The iodine removal efficiencies, shown in Table 4, were calculated using the iodine concentration measurements at the outlet from the second condenser and the two condensate streams. A mass balance around the second condenser was performed using the outlet gas-phase iodine concentration and the condensate iodine concentration to determine the iodine feed rate. A mass balance around the first condenser was used in a similar manner to determine the feed rate to that condenser. The gas samples from the dissolver, the feed to the first condenser, and the feed to the second condenser were not used in the efficiency calculations because they contained significant amounts of condensate. Unfortunately, because the exact amount of condensate in the samples was not always determined, there were erroneous results for the iodine material balance. Furthermore, it is suspected that small amounts of condensate may have accumulated in the areas of the sample lines, where the heat tape was ineffective, thus allowing the iodine to concentrate in the condensate and resulting in higher iodine concentrations in the samples taken from these lines.

Statistical analysis of the iodine removal efficiency data given in Table 4 indicated an inverse dependency of efficiency on temperature for the first condenser. Analysis of the efficiency data from the second condenser and the temperature from the first condenser indicated a direct correlation. These results are consistent with Eq. (1), in which lower temperatures result in higher distribution coefficients. This finding means that more iodine will be removed from the gas phase at lower temperatures. The direct correlation for the second condenser is indicative of higher operating temperatures in the first condenser, allowing more iodine to flow to the second condenser, where it then has the opportunity to be removed. The removal efficiency did not correlate as

Table 3. Iodine flow rates during the phase-two experiments

Run No.	Sample analysis feed rate (kmol/s)	Material balance feed rate (kmol/s)	Dissolver product (kmol/s)	Flow to 1st condenser (kmol/s)	Flow to 2d condenser (kmol/s)	Flow to caustic scrubber (kmol/s)
1	3.68E−08	9.44E−08	8.48E−10	9.50E−08	9.38E−08	9.35E−08
2	3.68E−08	5.99E−08	0.00E+00	6.06E−08	6.01E−08	5.99E−08
3	3.68E−08	7.02E−08	0.00E+00	7.10E−08	7.04E−08	7.02E−08
4	3.68E−08	3.64E−08	5.27E−11	3.65E−08	3.65E−08	3.63E−08
5	2.85E−08	3.93E−08	0.00E+00	3.96E−08	3.95E−08	3.93E−08
6	2.85E−08	3.70E−08	5.63E−11	3.72E−08	3.71E−08	3.69E−08
7	3.39E−08	4.22E−08	6.51E−11	4.28E−08	4.24E−08	4.22E−08
8	3.77E−08	3.96E−08	5.14E−10	4.03E−08	4.02E−08	3.91E−08
9	3.88E−08	3.40E−08	2.37E−09	3.37E−08	3.21E−08	3.16E−08
10	3.88E−08	3.39E−08	5.53E−11	3.45E−08	3.45E−08	3.38E−08
11	2.73E−08	5.46E−08	5.53E−11	5.49E−08	5.46E−08	5.46E−08
12	2.73E−08	5.34E−08	6.36E−11	5.44E−08	5.41E−08	5.34E−08
13	3.17E−08	5.82E−08	4.15E−10	5.88E−08	5.88E−08	5.78E−08
14	2.92E−08	4.01E−08	2.56E−09	3.90E−08	3.77E−08	3.76E−08
15	2.98E−08	1.95E−08	1.33E−09	1.94E−08	1.83E−08	1.82E−08
16	3.47E−08	4.08E−08	5.05E−10	4.14E−08	4.04E−08	4.03E−08
17	2.80E−08	2.57E−08	6.13E−11	2.64E−08	2.57E−08	2.56E−08
18	3.14E−08	3.63E−08	3.63E−09	3.35E−08	3.27E−08	3.27E−08
19	3.67E−08	3.78E−06	8.12E−10	3.76E−08	3.71E−08	3.70E−08
20	3.09E−08	7.44E−08	4.70E−10	7.45E−08	7.39E−08	7.39E−08
21	2.75E−08	4.16E−08	4.70E−10	4.18E−08	4.14E−08	4.11E−08
22	2.92E−08	3.94E−08	6.51E−10	3.94E−08	3.88E−08	3.87E−08
23	2.70E−08	2.95E−08	3.85E−10	3.01E−08	3.01E−08	2.91E−08
24	2.85E−08	3.72E−08	5.06E−10	3.81E−08	3.80E−08	3.67E−08
25	3.35E−08	5.24E−08	1.27E−09	5.23E−08	5.23E−08	5.12E−08
26	2.89E−08	5.12E−08	2.23E−09	4.95E−08	4.92E−08	4.89E−08
27	2.84E−08	5.73E−08	5.18E−09	5.28E−08	5.23E−08	5.21E−08
28	2.57E−08	4.18E−08	2.39E−09	4.00E−08	3.96E−08	3.94E−08

Table 4. Iodine removal efficiencies for the phase-two experiments

Run No.	Type of purge	Removal efficiencies (%) 1st condenser	2d condenser	Both condensers	Off-gas temperature from 1st condenser (°C)	Gas feed rate (L/min)
14-16	None	2.24	0.32	2.55	34.4	377.6
		5.78	0.54	6.29	38.4	398.1
		3.32	0.35	3.66	39.2	393.1
1-3	None	0.81	0.37	1.18	49.7	370.3
		1.35	0.25	1.60	49.8	378.6
		0.84	0.33	1.17	49.9	368.9
11-13	None	0.59	0.02	0.61	68.4	445.2
		0.43	1.36	1.79	69.7	439.8
		0.02	1.71	1.73	69.7	425.2
20-22	Feed	0.81	0.04	0.85	43.1	520.3
		0.96	0.66	1.61	43.9	569.1
		1.52	0.15	1.66	44.7	600.1
23-25	Feed	1.05	0.25	1.30	50.0	593.7
		1.00	0.58	1.57	50.0	594.5
		0.49	0.59	1.08	52.1	598.5
26-28	Feed	0.22	3.11	3.32	69.5	604.6
		0.28	3.42	3.69	69.8	599.8
		0.03	2.10	2.12	69.9	600.3
17-19	Discharge	2.28	0.24	2.82	40.4	522.5
		2.28	0.13	2.40	42.6	612.0
		1.51	0.17	1.68	44.5	614.2
4-7	Discharge	0.41	0.36	0.78	49.9	601.4
		0.26	0.56	0.82	50.0	571.5
		0.04	0.31	0.35	50.1	562.9
		0.84	0.67	1.50	50.1	619.9
8-10	Discharge	0.02	1.95	1.97	69.2	624.1
		0.31	2.58	2.88	69.8	590.4
		4.63	1.54	6.11	69.9	608.1

strongly with off-gas flow rate as did temperature, but there appear to be some interaction effects for temperature and flow as indicated by the noncollinearity in Figs. 9 through 11.

The overall iodine removal efficiency of the condensers was low (i.e., very little iodine was removed from the gas stream and recycled back to the dissolver system). Removal efficiency for both condensers ranged from 0.35 to 6.29%. The removal efficiency for the first condenser ranged from 0.03 to 5.78%, and for the second condenser, from 0.02 to 3.42%. In all the cases studied, the overall iodine removal efficiency appeared to be smallest with the first condenser

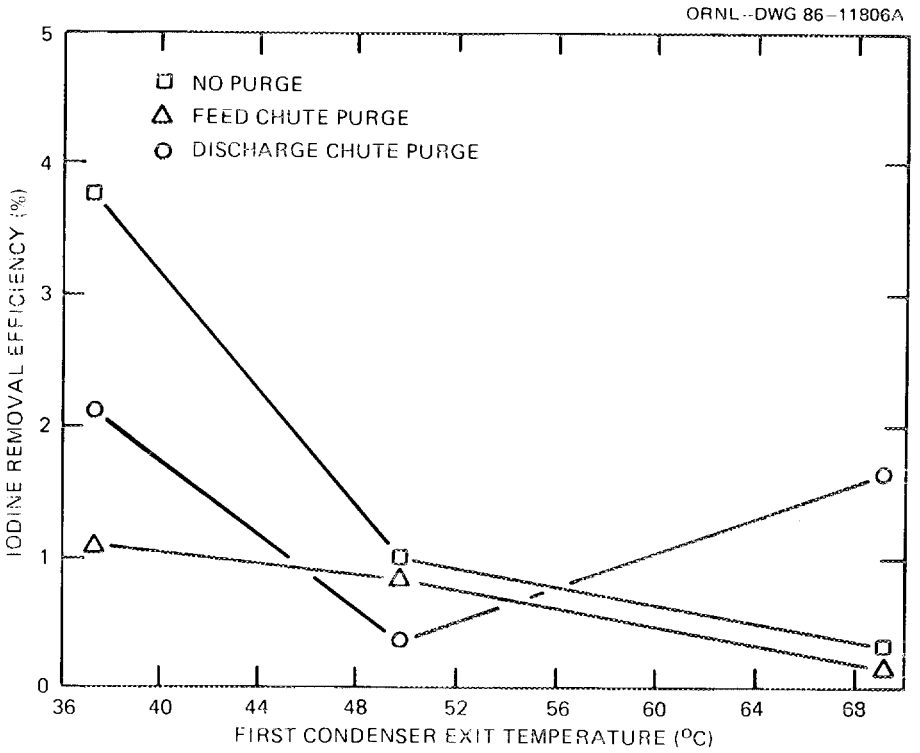

Fig. 9. Iodine removal efficiency for 1st stage DOG condenser.

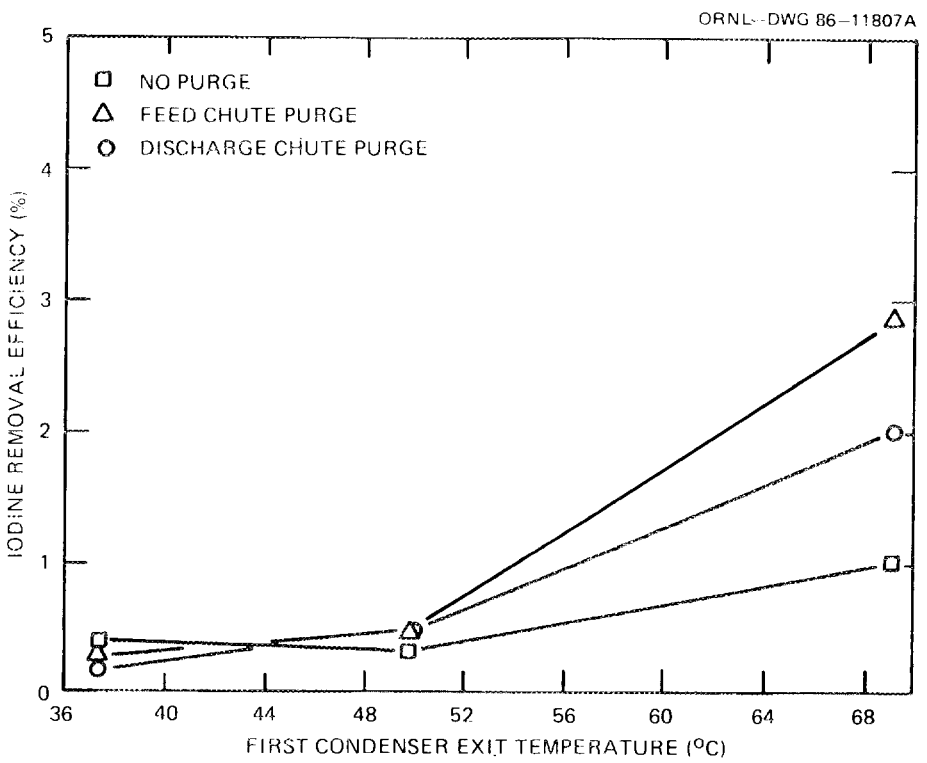

Fig. 10. Iodine removal efficiency for 2d stage DOG condenser.

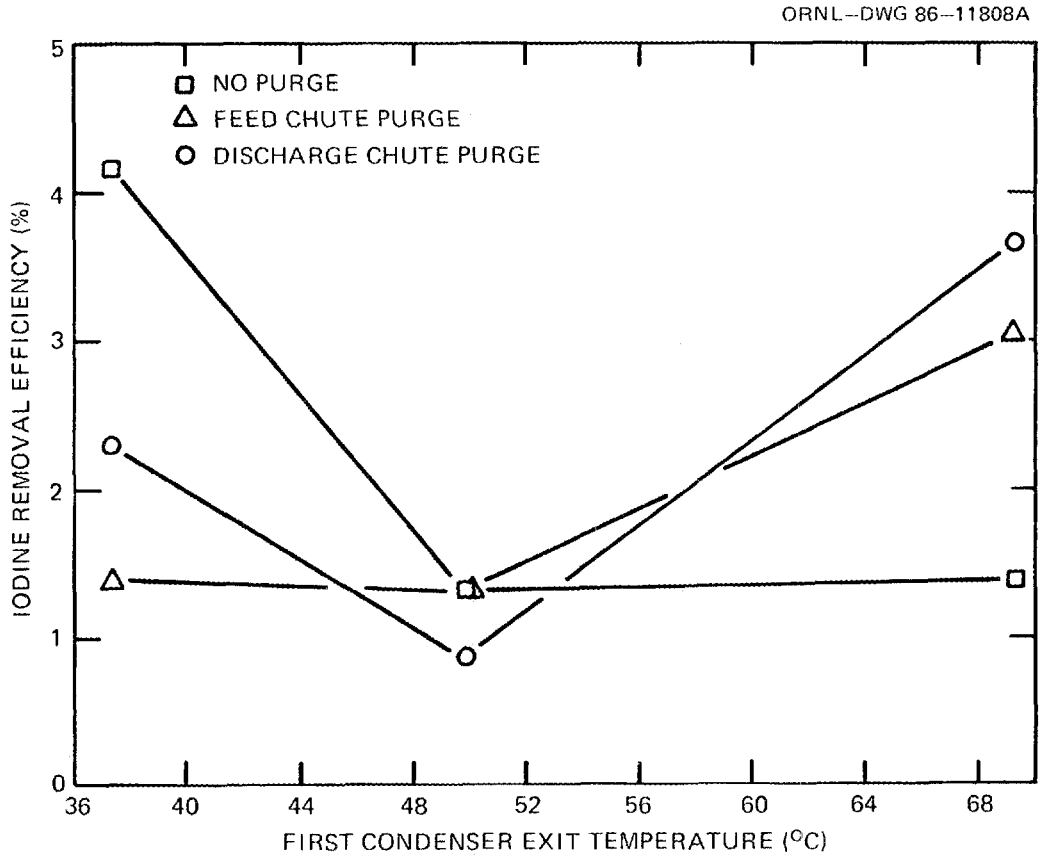

Fig. 11. Total iodine removal efficiency for two condensers in series in the DOG.

operating near ~50°C. While the 50°C operating temperature is not necessarily the optimum temperature, the data appear to indicate that the optimum is in the range of 50 to 70°C. A more refined estimate of the optimum first-stage condenser operating temperature will be the subject of additional experimental work. It is not possible to draw any significant conclusions from the data on the effects of flow rate and point of origin of the purge stream to the system because of both the variability of the off-gas rate and the interaction effects of flow rate and temperature.

5.3 PHASE THREE

Table 5 shows the NO_x feed rates to the first condenser based on chemical analysis, mass balance, and stoichiometric yields. The feed rate determination from chemical analysis was based on the gas sample taken at the inlet to the first condenser. During the sampling operation, condensation was observed in the gas bomb, and, as a result, the level of NO_x in the gas bomb is probably overestimated because of some scrubbing of the flowing gas stream during the purging operation of the sampling system. This overestimation is supported by the other two techniques.

Table 5. NO_x feed rate determinations for the first condenser

Sample No.	NO_x feed rate (kmol/s) Chemical analysis	Mass balance	Stoichiometry basis
1	3.25E−06	3.75E−06	1.81E−05
2	1.28E−05	1.03E−06	1.95E−06
3	3.84E−05	1.27E−05	1.81E−05
4	1.37E−05	2.21E−06	1.94E−06
5	1.15E−04	8.57E−06	1.81E−05
6	4.51E−05	9.61E−07	1.81E−05
7	6.77E−05	1.22E−05	1.81E−05
8	1.11E−04	3.05E−06	9.19E−07
9	2.55E−05	4.10E−06	5.47E−05
10	1.41E−04	1.05E−05	9.77E−07
11	2.25E−04	1.14E−05	5.47E−05
12	4.28E−05	6.97E−06	8.81E−07
13	3.44E−05	5.48E−06	5.47E−05
14	6.30E−06	4.30E−06	5.47E−05
15	9.29E−05	8.27E−06	1.81E−05
16	1.21E−04	3.32E−05	5.47E−05
17	1.39E−04	1.09E−05	1.81E−05
18	6.17E−05	8.40E−06	1.81E−05

The mass balance technique determined the feed rate based on the chemical analysis of the two condensate streams and the feed to the NO_x adsorber tower. The third type of determination presented in Table 5 was simply based on the stoichiometry of the dissolution reaction and the measured off-gas rate. During the dissolution period, only the evolved NO_x was considered, and during the reload period the NO_x rate was based on the vapor pressure of HNO_3 over the dissolver solution. Furthermore, during the dissolution period, these values did not give credit for HNO_3 vaporization and were always higher than the values calculated based on the overall material balance around the condensers. This results, in part, from condensation in the off-gas line leading to the first condenser. The condensate on the wall of the off-gas line allowed the pipe to act as a wetted-wall absorber and return a fraction of the NO_x to the dissolver, thus reducing the NO_x load on the condensers. Based on this analysis of the feed data, subsequent analysis of the NO_x system will use the feed stream composition determined by the overall material balance method.

Table 6 shows the NO_x scrubbing efficiencies of both the condensers together and of the NO_x scrubber as well as the overall system efficiency. In general, the overall efficiency was observed to be in the range of 40 to 60%, with the condenser efficiency around 20% but ranging from ~5 to 58%. The concentrations around the condensers and scrubber are shown in Table 7. Here the final effluent from the scrubber ranges between 0.4 and 1.0%, which is within the design specifications for this tower and with the requirements of the Iodox process. (Note that the low scrubber efficiencies correlate with the very low NO_x feed concentrations to the scrubber.) The NO_x removal efficiencies of the condensers tended to complement those for the scrubber in that the condenser efficiencies generally were high when the scrubber efficiencies were low and vice versa. The high NO_x

Table 6. NO_x removal efficiencies for the dual condensers, NO_x scrubber, and the total system based on the NO_x feed to the first condenser as determined by an overall mass balance

Sample No.	NO_x removal efficiencies (%)		
	Dual condensers	Scrubber	Overall
1	28.43	−32.54	5.15
2	16.19	100.00	100.00
3	12.46	52.66	58.56
4	17.24	*a*	*a*
5	47.27	−13.48	40.16
6	*a*	*a*	−367.66
7	12.12	42.19	49.20
8	42.59	−18.40	32.03
9	58.32	0.30	58.45
10	18.58	53.56	62.19
11	57.42	2.42	58.45
12	23.88	22.82	41.25
13	23.80	28.11	45.22
14	24.48	40.93	55.39
15	4.79	50.13	52.52
16	8.27	87.76	88.78
17	26.34	47.85	61.59
18	24.85	69.03	76.73

[a]Sample was lost.

Table 7. NO_x concentrations in vol %

Sample No.	Percent NO_x in DOG		
	To condensers	To scrubber	From scrubber
1	0.38	0.27	0.36
2	0.10	0.09	0.00
3	1.28	1.12	0.53
4	0.23	0.19	*a*
5	0.89	0.47	0.53
6	0.10	*a*	0.46
7	1.25	1.10	0.63
8	0.65	0.38	0.44
9	0.86	0.36	0.36
10	2.12	1.72	0.80
11	2.58	1.10	1.07
12	1.56	1.19	0.92
13	1.33	1.01	0.73
14	0.61	0.46	0.27
15	1.65	1.57	0.78
16	7.13	6.54	0.80
17	2.11	1.55	0.81
18	1.56	1.17	0.36

[a]Sample lost.

removal efficiencies for the condensers generally occurred when the DOG NO_x concentration was low (~1% or less). This indicates that the major NO_x constituent in the off-gas was probably HNO_3 vapor and that the removal mechanism was that of simple condensation rather than the complicated equilibrium reactions for the scrubbing of gaseous NO_x compounds from the off-gas stream.[2] The negative efficiency for sample 8 may be caused by the decomposition of HNO_2 in the scrubber solution to HNO_3 via:

$$3HNO_2\ (\ell) \leftrightarrow H_2O\ (\ell) + HNO_3\ (\ell) + 2NO\ (g)\ . \qquad (2)$$

The 100% efficiency for sample 2 is the result of the chemical analysis of the column effluent showing no NO_x. Samples were lost for sample series 4 and 6.

No definitive trends in NO_x removal efficiency could be linked to the dissolver operation. Sample series 2, 4, 7, 9, and 11 were taken during reload periods. Samples 8 through 13 were associated with the shear operation with UO_2 being fed to the dissolver. Figure 12 shows the timed operation of the system as well as the system efficiency. The somewhat erratic operation of the shear in providing UO_2 feed to the dissolver meant that for several extended periods of time early in day 2, and late in day 3, there was no dissolution to produce NO_x.

This behavior was shown clearly in the liquid analysis of the scrubber bottoms tank (see Table 8). The HNO_2 concentration in the tank gradually rose to a steady-state level of ~0.5 mg/mL prior to the extended nondissolution periods following sample point 13. The HNO_2 level

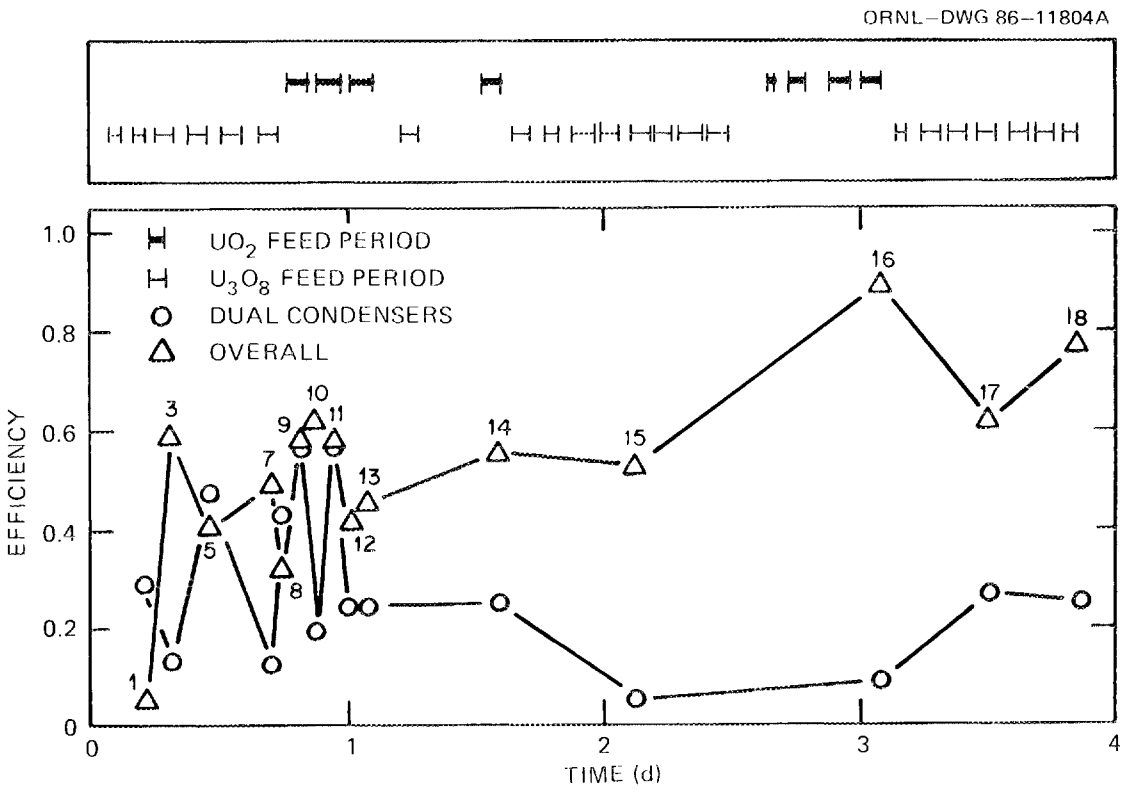

Fig. 12. NO_x removal efficiency during phase-three experiments.

Table 8. HNO_2 and HNO_3 concentrations in the NO_x scrubber bottoms tank

Sample No.	Bottoms tank acid concentration (*M*)	
	HNO_2	HNO_3
1	0.0059	2.13
2	0.0060	2.18
3	0.0086	2.00
4	0.0026	2.21
5	0.0031	1.90
6	0.0067	2.30
7	0.0065	0.40
8	0.0074	2.37
9	0.0122	2.38
10	0.0096	2.46
11	0.0120	2.54
12	0.0109	2.80
13	0.0102	2.89
14	0.0039	3.28
15	0.0080	3.20
16	0.0009	4.12
17	0.0039	3.78
18	0.0022	4.80

then dropped probably via reaction 2 during a long period with no feed to the dissolver (sample point 14). Then, with the reestablishment of feed to the dissolver, the level in the bottoms tank rose (sample point 15). Again, erratic feed was experienced just prior to sample 16, and a low level of HNO_2 was observed. Sample 17 was taken after a uniform U_3O_8 feed was established again. Figure 13 shows the HNO_2 and HNO_3 levels in the bottoms tank plotted against the dissolution feed system operation.

The analytical results for NO_2 in the gas streams were inconclusive; therefore, we were unable to determine the overall system behavior with regards to individual NO_x species. To overcome this problem, NO and NO_2 in-line analyzers will be installed at the sampling locations prior to the next major operation of this system.

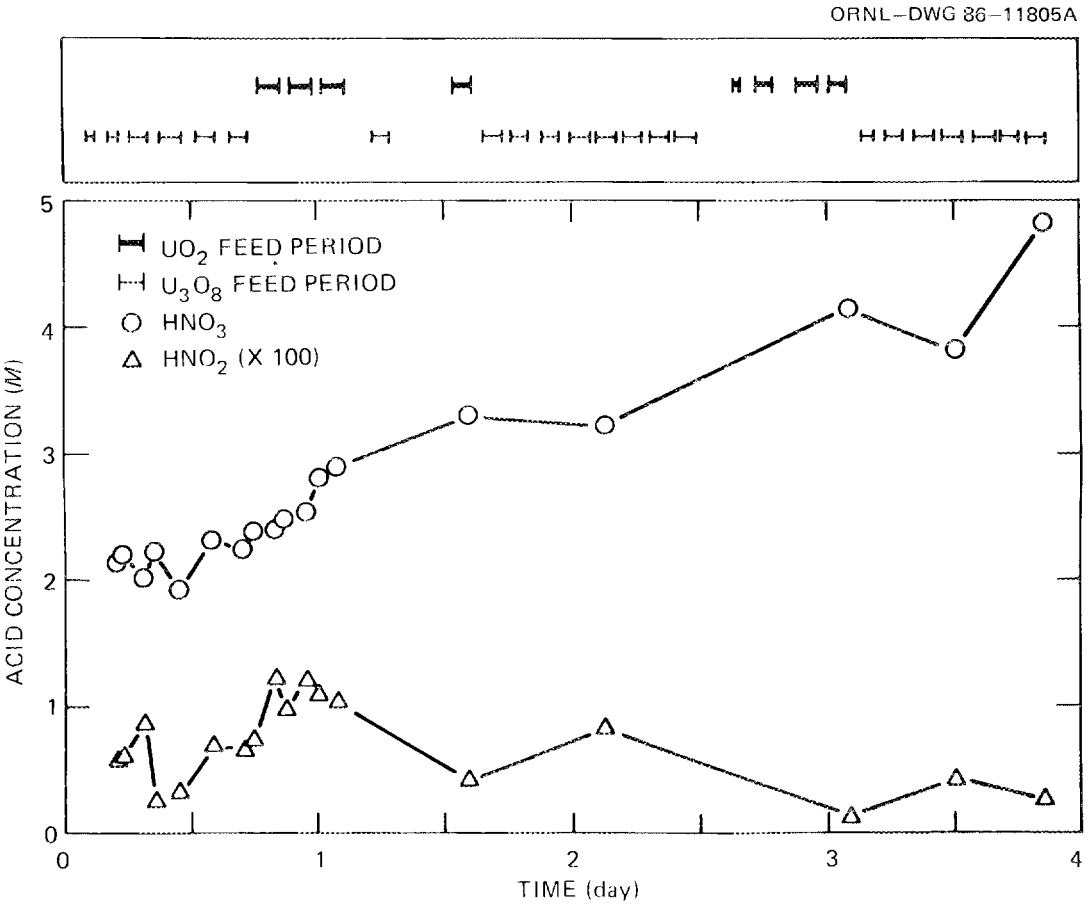

Fig. 13. NO_x scrubber bottoms tank HNO_3 and HNO_2 concentration during phase-three experiments.

6. CONCLUSIONS

The overall iodine removal efficiency of the condensers during phase-two experiments was low, indicating that only very small amounts of iodine were recycled back to the dissolver. (Total removal efficiencies for both condensers ranged from 0.35 to 6.29%). The removal efficiency for the first condenser ranged from 0.03 to 5.78%, and for the second condenser, from 0.02 to 3.42%. In all the cases studied, the overall iodine removal efficiency appeared to be smallest, with the first condenser operating near ~50°C. While the 50°C operating temperature is not necessarily the optimum temperature, the data appear to indicate that the optimum is in the range of 50 to 70°C.

Phase three of the IET DOG system tests verified the operation of the dual condensers and the NO_x scrubber column under a variety of operating conditions. The removal efficiencies of the condensers were higher than anticipated, generally ~20%. The scrubber provided an NO_x effluent of ~0.4 to 1.0% during the entire campaign, which is consistent with the acceptable NO_x levels in the off-gas to the Iodox process. In addition, this 0.4-1.0% NO_x level in the scrubber effluent confirms the BRET design decision to omit the NO_x scrubber in a system with a DOG NO_x concentration of ~1%.

REFERENCES

1. *LMFBR Fuel Cycle Studies Progress Report for May 1972*, No. 39, ORNL/TM-3888, 1982, pp. 18-21.

2. R. M. Counce, *The Scrubbing of Gaseous Nitrogen Oxides in Packed Towers*, ORNL-5676, November 1980.

ORNL/TM-10261
Dist. Category UC-86

INTERNAL DISTRIBUTION

1. J. T. Bell
2. D. E. Benker
3. J. F. Birdwell
4. J. O. Blomeke
5-7. W. D. Burch
8. D. O. Campbell
9. D. A. Costanzo
10. R. M. Counce
11. S. F. DeMuth
12. J. E. Dunn, Jr.
13. R. D. Ehrlich
14. M. J. Feldman
15. R. W. Glass
16. W. S. Groenier
17-21. R. T. Jubin
22. M. V. Keigan
23. L. J. King
24. E. H. Krieg, Jr.
25. R. E. Leuze
26-30. B. E. Lewis
31. J. C. Mailen
32. S. A. Meacham
33. D. R. Moser
34. J. H. Shaffer
35-37. R. W. Sharpe
38. B. B. Spencer
39. J. O. Stiegler
40. J. G. Stradley
41. P. Welesko
42-43. T. J. Williams
44-45. Laboratory Records
46. Laboratory Records, ORNL-RC
47. ORNL Patent Section
48. Nuclear Safety Information Center
49. Central Research Library
50. ORNL-Y-12 Technical Library Document Reference Section

EXTERNAL DISTRIBUTION

51. D. E. Bailey, Director, Division of Fuels and Reprocessing, Office of Facilities, Fuel Cycle, and Test Programs, U.S. Department of Energy, Washington, DC 20545
52. F. P. Baranowski, 1110 Dapple Grey Court, Great Falls, VA 22066
53. M. J. Ohanian, Associate Dean for Research, College of Engineering, 300 Weil Hall, University of Florida, Gainesville, FL 32611
54. J. F. Proctor, Senior Technical Specialist, E. I. du Pont de Nemours and Company, Savannah River Laboratory, Aiken, SC 29801
55. Office of Assistant Manager for Energy Research and Development, DOE-ORO, Oak Ridge, TN 37831

56-151. Given distribution as shown in TIC-4500 under UC-86, Consolidated Fuel Reprocessing Category

☆U.S. GOVERNMENT PRINTING OFFICE 1987—748-168/40128