DATE ISSUED FEB 27 1986
ORNL
MASTER COPY

NUREG/CR-4475
ORNL-6250

ornl

OAK RIDGE
NATIONAL
LABORATORY

MARTIN MARIETTA

ORMGEN.PC: A Microcomputer Program for Automatic Mesh Generation of 2-D Crack Geometries

J. W. Bryson B. R. Bass

Prepared for the U.S. Nuclear Regulatory Commission
Office of Nuclear Regulatory Research
Under Interagency Agreements DOE 40-551-75 and 40-552-75

OPERATED BY
MARTIN MARIETTA ENERGY SYSTEMS, INC.
FOR THE UNITED STATES
DEPARTMENT OF ENERGY

NOTICE

This report was prepared as an account of work sponsored by an agency of the United States Government. Neither the United States Government nor any agency thereof, or any of their employees, makes any warranty, expressed or implied, or assumes any legal liability or responsibility for any third party's use, or the results of such use, of any information, apparatus product or process disclosed in this report, or represents that its use by such third party would not infringe privately owned rights.

Available from

Superintendent of Documents
U.S. Government Printing Office
Post Office Box 37082
Washington, D.C. 20013-7982

and

National Technical Information Service
Springfield, VA 22161

NUREG/CR-4475
ORNL-6250
Dist. Category RF

Engineering Technology Division

ORMGEN.PC: A MICROCOMPUTER PROGRAM FOR AUTOMATIC MESH GENERATION OF 2-D CRACK GEOMETRIES

J. W. Bryson B. R. Bass

Manuscript Completed — January 29, 1986
Date Published — March 1986

Prepared for the
U.S. Nuclear Regulatory Commission
Office of Nuclear Regulatory Research
under Interagency Agreements DOE 40-551-75 and 40-552-75

NRC FIN No. B0119

Prepared by the
OAK RIDGE NATIONAL LABORATORY
Oak Ridge, Tennessee 37831
operated by
MARTIN MARIETTA ENERGY SYSTEMS, INC.
for the
U.S. DEPARTMENT OF ENERGY
under Contract No. DE-AC05-84OR21400

CONTENTS

	Page
LIST OF FIGURES	v
FOREWORD	vii
ABSTRACT	1
1. INTRODUCTION	1
2. ORMGEN.PC FINITE-ELEMENT MESH GENERATOR FOR 2-D CRACK GEOMETRIES	3
3. ORVIRT.PC AND ADINA/ORVIRT FRACTURE ANALYSIS PROGRAMS	6
4. SYSTEM REQUIREMENTS AND PROGRAM OPERATION	9
ACKNOWLEDGMENTS	10
REFERENCES	11
APPENDIX A. ORMGEN.PC USER INSTRUCTIONS	13
APPENDIX B. EXAMPLE PROBLEMS	21
APPENDIX C. CRACK-TIP BLOCK SUBDIVISION	71

LIST OF FIGURES

Figure		Page
1	Subdivision of regular block into its elements and nodal points	4
2	Crack-tip blocks compatible with ORVIRT.PC fracture analysis program	4
3	Crack-tip blocks compatible with ADINA/ORVIRT fracture analysis system	5
4	Crack configuration before and after crack extension	7
5	ORVIRT.PC compatible crack-tip block, ITYPE=1, and block point numbering convention	14
6	ORVIRT.PC compatible crack-tip block, ITYPE=2, and block point numbering convention	14
7	ADINA/ORVIRT compatible crack-tip block, ITYPE=3, and block point numbering convention	15
8	ADINA/ORVIRT compatible crack-tip block, ITYPE=4, and block point numbering convention	15
9	Blunting elements appropriate for ductile fracture analysis using ADINA/ORVIRT	19
10	Example problem 1 — uncracked thick cylinder	22
11	Example problem 2 — center-cracked plate, tension loading	29
12	Example problem 3 — center-cracked disk, center line point load	36
13	Example problem 4 — beam with embedded flaw, three-point bending	46
14	Example problem 5 — compact tension specimen	58
15	Element and node numbering for ORVIRT.PC compatible crack-tip block, ITYPE=1	72
16	Element and node numbering for ORVIRT.PC compatible crack-tip block, ITYPE=2	72

Figure		Page
17	Element and node numbering for ADINA/ORVIRT compatible crack-tip block, ITYPE=3, IKIND=0	73
18	Element and node numbering for ADINA/ORVIRT compatible crack-tip block, ITYPE=3, IKIND=1	74
19	Element and node numbering for ADINA/ORVIRT compatible crack-tip block, ITYPE=4, IKIND=0	75
20	Element and node numbering for ADINA/ORVIRT compatible crack-tip block, ITYPE=4, IKIND=1	76

FOREWORD

The work reported here was performed at Oak Ridge National Laboratory (ORNL) under the Heavy-Section Steel Technology (HSST) Program, C. E. Pugh, Program Manager. The program is sponsored by the Office of Nuclear Regulatory Research of the U.S. Nuclear Regulatory Commission (NRC). The technical monitor for the NRC is Milton Vagins.

This report is designated HSST Program Technical Report 85. Prior reports in this series are listed below:

1. S. Yukawa, *Evaluation of Periodic Proof Testing and Warm Prestressing Procedures for Nuclear Reactor Vessels*, HSSTP-TR-1, General Electric Company, Schenectady, New York (July 1, 1969).

2. L. W. Loechel, *The Effect of Testing Variables on the Transition Temperature in Steel*, MCR-69-189, Martin Marietta Corporation, Denver, Colorado (November 20, 1969).

3. P. N. Randall, *Gross Strain Measure of Fracture Toughness of Steels*, HSSTP-TR-3, TRW Systems Group, Redondo Beach, California (November 1, 1969).

4. C. Visser, S. E. Gabrielse, and W. VanBuren, *A Two-Dimensional Elastic-Plastic Analysis of Fracture Test Specimens*, WCAP-7368, Westinghouse Electric Corporation, PWR Systems Division, Pittsburgh, Pennsylvania (October 1969).

5. T. R. Mager and F. O. Thomas, *Evaluation by Linear Elastic Fracture Mechanics of Radiation Damage to Pressure Vessel Steels*, WCAP-7328 (Rev.), Westinghouse Electric Corporation, PWR Systems Division, Pittsburgh, Pennsylvania (October 1969).

6. W. O. Shabbits, W. H. Pryle, and E. T. Wessel, *Heavy-Section Fracture Toughness Properties of A533 Grade B Class 1 Steel Plate and Submerged Arc Weldment*, WCAP-7414, Westinghouse Electric Corporation, PWR Systems Divison, Pittsburgh, Pennsylvania (December 1969).

7. F. J. Loss, *Dynamic Tear Test Investigations of the Fracture Toughness of Thick-Section Steel*, NRL-7056, Naval Research Laboratory, Washington, D.C. (May 14, 1970).

8. P. B. Crosley and E. J. Ripling, *Crack Arrest Fracture Toughness of A533 Grade B Class 1 Pressure Vessel Steel*, HSSTP-TR-8, Materials Research Laboratory, Inc., Glenwood, Illinois (March 1970).

9. T. R. Mager, *Post-Irradiation Testing of 2T Compact Tension Specimens*, WCAP-7561, Westinghouse Electric Corporation, PWR Systems Division, Pittsburgh, Pennsylvania (August 1970).

10. T. R. Mager, *Fracture Toughness Characterization Study of A533, Grade B, Class 1 Steel*, WCAP-7578, Westinghouse Electric Corporation, PWR Systems Division, Pittsburgh, Pennsylvania (October 1970).

11. T. R. Mager, *Notch Preparation in Compact Tension Specimens*, WCAP-7579, Westinghouse Electric Corporation, PWR Systems Division, Pittsburgh, Pennsylvania (November 1970).

12. N. Levy and P. V. Marcal, *Three-Dimensional Elastic-Plastic Stress and Strain Analysis for Fracture Mechanics, Phase I: Simple Flawed Specimens*, HSSTP-TR-12, Brown University, Providence, Rhode Island (December 1970).

13. W. O. Shabbits, *Dynamic Fracture Toughness Properties of Heavy Section A533 Grade B Class 1 Steel Plate*, WCAP-7623, Westinghouse Electric Corporation, PWR Systems Division, Pittsburgh, Pennsylvania (December 1970).

14. P. N. Randall, *Gross Strain Crack Tolerance of A533-B Steel*, HSSTP-TR-14, TRW Systems Group, Redondo Beach, California (May 1, 1971).

15. H. T. Corten and R. H. Sailors, *Relationship Between Material Fracture Toughness Using Fracture Mechanics and Transition Temperature Tests*, T&AM Report 346, University of Illinois, Urbana, Illinois (August 1, 1971).

16. T. R. Mager and V. J. McLoughlin, *The Effect of an Environment of High Temperature Primary Grade Nuclear Reactor Water on the Fatigue Crack Growth Characteristics of A533 Grade B Class 1 Plate and Weldment Material*, WCAP-7776, Westinghouse Electric Corporation, PWR Systems Division, Pittsburgh, Pennsylvania (October 1971).

17. N. Levy and P. V. Marcal, *Three-Dimensional Elastic-Plastic Stress and Strain Analysis for Fracture Mechanics, Phase II: Improved Modelling*, HSSTP-TR-17, Brown University, Providence, Rhode Island (November 1971).

18. S. C. Grigory, *Tests of 6-in.-Thick Flawed Tensile Specimens, First Technical Summary Report, Longitudinal Specimens Numbers 1 through 7*, HSSTP-TR-18, Southwest Research Institute, San Antonio, Texas (June 1972).

19. P. N. Randall, *Effects of Strain Gradients on the Gross Strain Crack Tolerance of A533-B Steel*, HSSTP-TR-19, TRW Systems Group, Redondo Beach, California (June 15, 1972).

20. S. C. Grigory, *Tests of 6-Inch-Thick Flawed Tensile Specimens, Second Technical Summary Report, Transverse Specimens Numbers 8 through 10, Welded Specimens Numbers 11 through 13*, HSSTP-TR-20, Southwest Research Institute, San Antonio, Texas (June 1972).

21. L. A. James and J. A. Williams, *Heavy Section Steel Technology Program Technical Report No. 21, The Effect of Temperature and Neutron Irradiation Upon the Fatigue-Crack Propagation Behavior of ASTM A533 Grade B, Class 1 Steel*, HEDL-TME 72-132, Hanford Engineering Development Laboratory, Richland, Washington (September 1972).

22. S. C. Grigory, *Tests of 6-Inch-Thick Flawed Tensile Specimens, Third Technical Summary Report, Longitudinal Specimens Numbers 14 through 16, Unflawed Specimen Number 17*, HSSTP-TR-22, Southwest Research Institute, San Antonio, Texas (October 1972).

23. S. C. Grigory, *Tests of 6-Inch Thick Tensile Specimens, Fourth Technical Summary Report, Tests of 1-Inch-Thick Flawed Tensile Specimens for Size Effect Evaluation*, HSSTP-TR-23, Southwest Research Institute, San Antonio, Texas (June 1973).

24. S. P. Ying and S. C. Grigory, *Tests of 6-Inch-Thick Tensile Specimens, Fifth Technical Summary Report, Acoustic Emission Monitoring of One-Inch and Six-Inch-Thick Tensile Specimens*, HSSTP-TR-24, Southwest Research Institute, San Antonio, Texas (November 1972).

25. R. W. Derby, J. G. Merkle, G. C. Robinson, G. D. Whitman, and F. J. Witt, *Test of 6-Inch-Thick Pressure Vessels. Series 1: Intermediate Test Vessels V-1 and V-2*, ORNL-4895, Oak Ridge National Laboratory, Oak Ridge, Tennessee (February 1974).

26. W. J. Stelzman and R. G. Berggren, *Radiation Strengthening and Embrittlement in Heavy Section Steel Plates and Welds*, ORNL-4871, Oak Ridge National Laboratory, Oak Ridge, Tennessee (June 1973).

27. P. B. Crosley and E. J. Ripling, *Crack Arrest in an Increasing K-Field*, HSSTP-TR-27, Materials Research Laboratory, Inc., Glenwood, Illinois (January 1973).

28. P. V. Marcal, P. M. Stuart, and R. S. Bettes, *Elastic-Plastic Behavior of a Longitudinal Semi-Elliptic Crack in a Thick Pressure Vessel*, HSSTP-TR-28, Brown University, Providence, Rhode Island (June 1973).

29. W. J. Stelzman, R. G. Berggren and T. N. Jones, *ORNL Characterization of Heavy-Section Steel Technology Program Plates 01, 02 and 03*, NUREG/CR-4092 (ORNL/TM-9491), Oak Ridge Natl. Lab., Oak Ridge, Tenn. (April 1985).

30. Canceled.

31. J. A. Williams, *The Irradiation and Temperature Dependence of Tensile and Fracture Properties of ASTM A533, Grade B, Class 1 Steel Plate and Weldment*, HEDL-TME 73-75, Hanford Engineering Development Laboratory, Richland, Washington (August 1973).

32. J. M. Steichen and J. A. Williams, *High Strain Rate Tensile Properties of Irradiated ASTM A533 Grade B Class 1 Pressure Vessel Steel*, Hanford Engineering Development Laboratory, Richland, Washington (July 1973).

33. P. C. Riccardella and J. L. Swedlow, *A Combined Analytical-Experimental Fracture Study of the Two Leading Theories of Elastic-Plastic Fracture (J-Integral and Equivalent Energy)*, WCAP-8224, Westinghouse Electric Corporation, Pittsburgh, Pennsylvania (October 1973).

34. R. J. Podlasek and R. J. Eiber, *Final Report on Investigation of Mode III Crack Extension in Reactor Piping*, Battelle Columbus Laboratories, Columbus, Ohio (December 14, 1973).

35. T. R. Mager, J. D. Landes, D. M. Moon, and V. J. McLaughlin, *Interim Report on the Effect of Low Frequencies on the Fatigue Crack Growth Characteristics of A533 Grade B Class 1 Plate in an Environment of High-Temperature Primary Grade Nuclear Reactor Water*, WCAP-8256, Westinghouse Electric Corporation, Pittsburgh, Pennsylvania (December 1973).

36. J. A. Williams, *The Irradiated Fracture Toughness of ASTM A533, Grade B, Class 1 Steel Measured with a Four-Inch-Thick Compact Tension Specimen*, HEDL-TME 75-10, Hanford Engineering Development Laboratory, Richland, Washington (January 1975).

37. R. H. Bryan, J. G. Merkle, M. N. Raftenberg, G. C. Robinson, and J. E. Smith, *Test of 6-Inch-Thick Pressure Vessels. Series 2: Intermediate Test Vessels V-3, V-4, and V-6*, ORNL-5059, Oak Ridge National Laboratory, Oak Ridge, Tennessee (November 1975).

38. T. R. Mager, S. E. Yanichko, and L. R. Singer, *Fracture Toughness Characterization of HSST Intermediate Pressure Vessel Material*, WCAP-8456, Westinghouse Electric Corporation, Pittsburgh, Pennsylvania (December 1974).

39. J. G. Merkle, G. D. Whitman, and R. H. Bryan, *An Evaluation of the HSST Program Intermediate Pressure Vessel Tests in Terms of Light-Water-Reactor Pressure Vessel Safety*, ORNL-TM-5090, Oak Ridge National Laboratory, Oak Ridge, Tennessee (November 1975).

40. J. G. Merkle, G. C. Robinson, P. P. Holz, J. E. Smith, and R. H. Bryan, *Test of 6-In.-Thick Pressure Vessels. Series 3: Intermediate Test Vessel V-7*, ORNL/NUREG-1, Oak Ridge National Laboratory, Oak Ridge, Tennessee (August 1976).

41. J. A. Davidson, L. J. Ceschini, R. P. Shogan, and G. V. Rao, *The Irradiated Dynamic Fracture Toughness of ASTM A533, Grade B, Class 1 Steel Plate and Submerged Arc Weldment*, WCAP-8775, Westinghouse Electric Corporation, Pittsburgh, Pennsylvania (October 1976).

42. R. D. Cheverton, *Pressure Vessel Fracture Studies Pertaining to PWR LOCA-ECC Thermal Shock: Experiments TSE-1 and TSE-2*, ORNL/NUREG/TM-31, Oak Ridge National Laboratory, Oak Ridge, Tennessee (September 1976).

43. J. G. Merkle, G. C. Robinson, P. P. Holz, and J. E. Smith, *Test of 6-In.-Thick Pressure Vessels. Series 4: Intermediate Test Vessels V-5 and V-9 with Inside Nozzle Corner Cracks*, ORNL/NUREG-7, Oak Ridge National Laboratory, Oak Ridge, Tennessee (August 1977).

44. J. A. Williams, *The Ductile Fracture Toughness of Heavy Section Steel Plate*, NUREG/CR-0859, Hanford Engineering Development Laboratory, Richland, Washington (September 1979).

45. R. H. Bryan, T. M. Cate, P. P. Holz, T. A. King, J. G. Merkle, G. C. Robinson, G. C. Smith, J. E. Smith, and G. D. Whitman, *Test of 6-in.-Thick Pressure Vessels. Series 3: Intermediate Test Vessel V-7A Under Sustained Loading*, ORNL/NUREG-9, Oak Ridge National Laboratory, Oak Ridge, Tennessee (February 1978).

46. R. D. Cheverton and S. E. Bolt, *Pressure Vessel Fracture Studies Pertaining to a PWR LOCA-ECC Thermal Shock: Experiments TSE-3 and TSE-4 and Update of TSE-1 and TSE-2 Analysis*, ORNL/NUREG-22, Oak Ridge National Laboratory, Oak Ridge, Tennessee (December 1977).

47. D. A. Canonico, *Significance of Reheat Cracks to the Integrity of Pressure Vessels for Light-Water Reactors*, ORNL/NUREG-15, Oak Ridge National Laboratory, Oak Ridge, Tennessee (July 1977).

48. G. C. Smith and P. P. Holz, *Repair Weld Induced Residual Stresses in Thick-Walled Steel Pressure Vessels*, NUREG/CR-0093 (ORNL/NUREG/TM-153), Oak Ridge National Laboratory, Oak Ridge, Tennessee (June 1978).

49. P. P. Holz and S. W. Wismer, *Half-Bead (Temper) Repair Welding for HSST Vessels*, NUREG/CR-0113 (ORNL/NUREG/TM-177), Oak Ridge National Laboratory, Oak Ridge, Tennessee (June 1978).

50. G. C. Smith, P. P. Holz, and W. J. Stelzman, *Crack Extension and Arrest Tests of Axially Flawed Steel Model Pressure Vessels*, NUREG/CR-0126 (ORNL/NUREG/TM-196), Oak Ridge National Laboratory, Oak Ridge, Tennessee (October 1978).

51. R. H. Bryan, P. P. Holz, J. G. Merkle, G. C. Smith, J. E. Smith, and W. J. Stelzman, *Test of 6-in.-Thick Pressure Vessels. Series 3: Intermediate Test Vessel V-7B*, NUREG/CR-0309 (ORNL/NUREG-38), Oak Ridge National Laboratory, Oak Ridge, Tennessee (October 1978).

52. R. D. Cheverton, S. K. Iskander, and S. E. Bolt, *Applicability of LEFM to the Analysis of PWR Vessels Under LOCA-ECC Thermal Shock Conditions*, NUREG/CR-0107 (ORNL/NUREG-40), Oak Ridge National Laboratory, Oak Ridge, Tennessee (October 1978).

53. R. H. Bryan, D. A. Canonico, P. P. Holz, S. K. Iskander, J. G. Merkle, J. E. Smith, and W. J. Stelzman, *Test of 6-in.-Thick Pressure Vessels, Series 3: Intermediate Test Vessel V-8*, NUREG/CR-0675 (ORNL/NUREG-58), Oak Ridge National Laboratory, Oak Ridge, Tennessee (December 1979).

54. R. D. Cheverton and S. K. Iskander, *Application of Static and Dynamic Crack Arrest Theory to TSE-4*, NUREG/CR-0767 (ORNL/NUREG-57), Oak Ridge National Laboratory, Oak Ridge, Tennessee (June 1979).

55. J. A. Williams, *Tensile Properties of Irradiated and Unirradiated Welds of A533 Steel Plate and A508 Forgings*, NUREG/CR-1158 (ORNL/SUB-79/50917/2), Hanford Engineering Development Laboratory, Richland, Washington (July 1979).

56. K. W. Carlson and J. A. Williams, *The Effect of Crack Length and Side Grooves on the Ductile Fracture Toughness Properties of ASTM A533 Steel*, NUREG/CR-1171 (ORNL/Sub-79/50917/3), Hanford Engineering Development Laboratory, Richland, Washington (October 1979).

57. P. P. Holz, *Flaw Preparations for HSST Program Vessel Fracture Mechanics Testing; Mechanical-Cyclic Pumping and Electron-Beam Weld-Hydrogen Charge Cracking Schemes*, NUREG/CR-1274 (ORNL/NUREG/TM-369), Oak Ridge National Laboratory, Oak Ridge, Tennessee (May 1980).

58. S. K. Iskander, *Two Finite Element Techniques for Computing Mode I Stress Intensity Factors in Two- or Three-Dimensional Problems*, NUREG/CR-1499 (ORNL/NUREG/CSD/TM-14), Computer Sciences Div., Union Carbide Corporation, Nuclear Division, Oak Ridge, Tennessee (February 1981).

59. P. B. Crosley and E. J. Ripling, *Development of a Standard Test for Measuring K_{Ia} with a Modified Compact Specimen*, NUREG/CR-2294 (ORNL/Sub 81/7755/1), Materials Research Laboratory, Glenwood, Illinois (August 1981).

60. S. N. Atluri, B. R. Bass, J. W. Bryson, and K. Kathiresan, *NOZ-FLAW: A Finite Element Program for Direct Evaluation of Stress Intensity Factors for Pressure Vessel Nozzle-Corner Flaws*, NUREG/CR-1843 (ORNL/NUREG/CSD/TM-18), Computer Sciences Div., Oak Ridge Gaseous Diffusion Plant, Oak Ridge, Tennessee (March 1981).

61. A. Shukla, W. L. Fourney, and G. R. Irwin, *Study of Energy Loss and Its Mechanisms in Homalite 100 During Crack Propagation and Arrest*, NUREG/CR-2150 (ORNL/Sub-7778/1), University of Maryland, College Park, Maryland (August 1981).

62. S. K. Iskander, R. D. Cheverton, and D. G. Ball, *OCA-1, A Code for Calculating the Behavior of Flaws on the Inner Surface of a Pressure Vessel Subjected to Temperature and Pressure Transients*, NUREG/CR-2113 (ORNL/NUREG-84), Oak Ridge National Laboratory, Oak Ridge, Tennessee (August 1981).

63. R. J. Sanford, R. Chona, W. L. Fourney, and G. R. Irwin, *A Photoelastic Study of the Influence of Non-Singular Stresses in Fracture Test Specimens*, NUREG/CR-2179 (ORNL/Sub-7778/2), University of Maryland, College Park, Maryland (August 1981).

64. B. R. Bass, S. N. Atluri, J. W. Bryson, and K. Kathiresan, *OR-FLAW: A Finite Element Program for Direct Evaluation of K-Factors for User-Defined Flaws in Plate, Cylinders, and Pressure-Vessel Nozzle Corners*, ORNL/CSD/TM-165 (NUREG/CR-2494), Oak Ridge National Laboratory (April 1982).

65. B. R. Bass and J. W. Bryson, *ORMGEN-3D: A Finite Element Mesh Generator for 3-Dimensional Crack Geometries*, NUREG/CR-2997, Vol. 1 (ORNL/TM-8527/V1), Oak Ridge National Laboratory, Oak Ridge, Tennessee (December 1982).

66. B. R. Bass and J. W. Bryson, *ORVIRT: A Finite Element Program for Energy Release Rate Calculations for 2-Dimensional and 3-Dimensional Crack Models*, NUREG/CR-2997, Vol. 2 (ORNL/TM-8527/V2), Oak Ridge National Laboratory, Oak Ridge, Tennessee (February 1983).

67. R. D. Cheverton, S. K. Iskander, and D. G. Ball, *PWR Pressure Vessel Integrity During Overcooling Accidents: A Parametric Analysis*, NUREG/CR-2895 (ORNL/TM-7931), Oak Ridge National Laboratory, Oak Ridge, Tennessee (February 1983).

68. D. G. Ball, R. D. Cheverton, J. B. Drake, and S. K. Iskander, *OCA-II, A Code for Calculating Behavior of 2-D and 3-D Surface Flaws in a Pressure Vessel Subjected to Temperature and Pressure Transients*, NUREG/CR-3491 (ORNL-5934), Oak Ridge National Laboratory, Oak Ridge, Tennessee (February 1984).

69. A. Sauter, R. D. Cheverton, and S. K. Iskander, *Modification of OCA-I for Application to a Reactor Pressure Vessel with Cladding on the Inner Surface*, NUREG/CR-3155 (ORNL/TM-8649), Oak Ridge National Laboratory, Oak Ridge, Tennessee (May 1983).

70. R. D. Cheverton and D. G. Ball, *OCA-P, A Deterministic and Probabilistic Fracture-Mechanics Code for Application to Pressure Vessels*, NUREG/CR-3618 (ORNL-5991), Oak Ridge National Laboratory, Oak Ridge, Tennessee (May 1984).

71. J. G. Merkle, *An Examination of the Size Effects and Data Scatter Observed in Small Specimen Cleavage Fracture Toughness Testing*, NUREG/CR-3672 (ORNL/TM-9088), Oak Ridge National Laboratory, Oak Ridge, Tennessee (April 1984).

72. C. E. Pugh et al., *Heavy-Section Steel Technology Program — Five-Year Plan FY 1983—1987*, NUREG/CR-3595 (ORNL/TM-9008), Oak Ridge National Laboratory, Oak Ridge, Tennessee (April 1984).

73. D. G. Ball, B. R. Bass, J. W. Bryson, R. D. Cheverton, and J. B. Drake, *Stress Intensity Factor Influence Coefficients for Surface Flaws in Pressure Vessels* NUREG/CR-3723 (ORNL/CSD/TM-216), Oak Ridge National Laboratory, Oak Ridge, Tennessee (February 1985).

74. W. R. Corwin, R. G. Berggren, and R. K. Nanstad, *Charpy Toughness and Tensile Properties of Neutron Irradiated Stainless Steel Submerged-Arc Weld Cladding Overlay*, NUREG/CR-3927 (ORNL/TM-9309), Oak Ridge National Laboratory, Oak Ridge, Tennessee (September 1984).

75. C. W. Schwartz, R. Chona, W. L. Fourney, and G. R. Irwin, *SAMCR: A Two-Dimensional Dynamic Finite Element Code for the Stress Analysis of Moving CRacks*, NUREG/CR-3891 (ORNL/Sub/79-7778/3), University of Maryland, College Park, Maryland (November 1984).

76. W. R. Corwin, G. C. Robinson, R. K. Nanstad, J. G. Merkle, R. G. Berggren, G. M. Goodwin, R. L. Swain, and T. D. Owings, *Effects of Stainless Steel Weld Overlay Cladding on the Structural Integrity of Flawed Steel Plates in Bending, Series 1*, NUREG/CR-4015 (ORNL/TM-9390), Oak Ridge National Laboratory, Oak Ridge, Tennessee (April 1985).

77. R. H. Bryan, B. R. Bass, S. E. Bolt, J. W. Bryson, D. P. Edmonds, R. W. McCulloch, J. G. Merkle, R. K. Nanstad, G. C. Robinson, K. R. Thoms, and G. D. Whitman, *Pressurized-Thermal-Shock Test of 6-in.-Thick Pressure Vessels. PTSE-1: Investigation of Warm Prestressing and Upper-Shelf Arrest*, NUREG/CR-4106 (ORNL-6135), Oak Ridge National Laboratory, Oak Ridge, Tennessee (April 1985).

78. R. D. Cheverton, D. G. Ball, S. E. Bolt, S. K. Iskander, and R. K. Nanstad, *Pressure Vessel Fracture Studies Pertaining to the PWR Thermal-Shock Issue: Experiments TSE-5, TSE-5A, and TSE-6*, NUREG/CR-4249 (ORNL-6163), Martin Marietta Energy Systems, Inc., Oak Ridge National Laboratory, Oak Ridge, Tennessee (June 1985).

79. R. D. Cheverton, D. G. Ball, S. E. Bolt, S. K. Iskander, and R. K. Nanstad, *Pressure Vessel Fracture Studies Pertaining to the PWR Thermal-Shock Issue: Experiment TSE-7*, NUREG/CR-4304 (ORNL-6177), Martin Marietta Energy Systems, Inc., Oak Ridge National Laboratory, Oak Ridge, Tennessee (August 1985).

80. R. H. Bryan, B. R. Bass, S. E. Bolt, J. W. Bryson, J. G. Merkle, R. K. Nanstad, and G. C. Robinson, *Test of 6-in.-Thick Pressure Vessels. Series 3: Intermediate Test Vessel V-8A — Tearing Behavior of Low Upper-Shelf Material*, NUREG/CR-XXXX (ORNL-6187), Martin Marietta Energy Systems, Inc., Oak Ridge National Laboratory, Oak Ridge, Tennessee (to be published).

81. R. D. Cheverton and D. G. Ball, *A Parametric Study of PWR Pressure Vessel Integrity During Overcooling Accidents, Considering Both 2-D and 3-D Flaws*, NUREG/CR-4325 (ORNL/TM-9682), Martin Marietta Energy

Systems, Inc., Oak Ridge National Laboratory, Oak Ridge, Tennessee (August 1985).

82. E. C. Rodabaugh, *Comments on the Leak-Before-Break Concept for Nuclear Power Plant Piping Systems*, NUREG/CR-4305 (ORNL/Sub/82-22252/3), E. C. Rodabaugh Associates, Inc., Hilliard, Ohio (August 1985).

83. J. W. Bryson, *ORVIRT.PC: A 2-D Finite Element Fracture Analysis Program for a Microcomputer*, NUREG/CR-4367 (ORNL-6208), Martin Marietta Energy Systems, Inc., Oak Ridge National Laboratory, Oak Ridge, Tennessee (October 1985).

84. D. G. Ball and R. D. Cheverton, *Adaptation of OCA-P, A Probabilistic Fracture-Mechanics Code, to a Personal Computer*, NUREG/CR-4468 (ORNL/CSD/TM-233), Martin Marietta Energy Systems, Inc., Oak Ridge National Laboratory, Oak Ridge, Tennessee (January 1986).

ORMGEN.PC: A MICROCOMPUTER PROGRAM FOR AUTOMATIC MESH GENERATION OF 2-D CRACK GEOMETRIES

J. W. Bryson B. R. Bass

ABSTRACT

ORMGEN.PC (Oak Ridge Mesh GENeration. Personal Computer) automatically generates two-dimensional finite-element models for either cracked or uncracked structures. Element connectivities and nodal point coordinates are written in formats that are compatible for subsequent fracture analysis using either the ORVIRT.PC finite-element microcomputer program or the ADINA/ORVIRT mainframe system. ORMGEN.PC emphasizes generality in its design. Finite-element models can be generated for disks, plates, cylinders, and even geometries with holes, such as compact tension specimens. Either surface or embedded flaw geometries can be modeled. Detailed user instructions describe both preparation of input data and program operation. Sample problems are presented that demonstrate the flexibility of the program. ORMGEN.PC executes on an IBM PC/AT or PC/XT microcomputer; typical runtimes on an IBM PC/AT are 30 to 45 s.

1. INTRODUCTION

Automatic mesh generation is a necessity for fast, efficient finite-element analysis. Mesh generation programs alleviate much of the effort involved in data preparation and eliminate the inevitable data errors that occur during manual preparation of the nodal point coordinates and element connectivities. Applications of finite-element techniques to fracture mechanics problems require some additional considerations that make an automatic mesh generation capability all the more important. Often, special crack-tip elements are employed to model the appropriate stress singularity along the crack front. Also, a locally refined mesh is usually required in the crack front region because of the presence of large stress gradients. Finally, certain fracture analysis techniques may require a special arrangement of elements in the crack-tip region.

For these reasons, the ORMGEN.PC finite-element mesh generator program was developed to facilitate fracture studies in the Heavy-Section Steel Technology Program. ORMGEN.PC automatically generates two-dimensional (2-D) finite-element meshes for both cracked and uncracked planar geometries. Eight-noded, isoparametric, quadrilateral elements are employed everywhere in the modeling, including the crack-tip region. Element connectivities and nodal point coordinates are written to output files in a format compatible for subsequent fracture analysis, using either the microcomputer program ORVIRT.PC (Ref. 1) or the mainframe ADINA/ORVIRT system.[2-4] The ORMGEN.PC—ORVIRT.PC combination provides a

2-D stand-alone fracture analysis capability on a microcomputer for linear thermoelastic applications, while the ORMGEN.PC—ADINA/ORVIRT combination provides a 2-D elastoplastic fracture analysis capability on a mainframe computer.

Like ORVIRT.PC, ORMGEN.PC executes on either an IBM PC/AT or PC/XT microcomputer; typical runtimes on a PC/AT are 30 to 45 s. Complete user instructions are provided in Appendix A, and sample problems that demonstrate the flexibility of the program are presented in Appendix B.

2. ORMGEN.PC FINITE-ELEMENT MESH GENERATOR FOR 2-D CRACK GEOMETRIES

Program ORMGEN.PC automatically generates 2-D finite-element models for both cracked and uncracked structures. The program strategy is to divide a structure into a few large blocks or superelements for which manual input of the data is required in the usual manner. One specifies the fineness of element subdivision within each of these large blocks, and this subdivision is then performed automatically by the program. Thus, the amount of input is directly proportional to the complexity of the structure. Because each block has the general form of a quadrilateral, it is convenient to employ the shape functions for eight-noded, isoparametric quadrilaterals for locating nodal points via interpolation within a block. Figure 1 shows the subdivision of a block into its elements by specifying the number of subdivisions in the local ξ and η directions, respectively. Element subdivisions can be unequal as specified by input weighting factors; however, the user must be careful to maintain compatibility along block interfaces. Each block is an eight-noded quadrilateral, which in turn is subdivided into eight-noded, isoparametric, quadrilateral elements. The conventions for block, block point, element, and nodal point numbering are shown in Fig. 1. Block points are listed counterclockwise starting from any corner point, which implies that the global X-Y coordinate system is a right-handed one.

The outstanding feature of the large block or superelement approach employed here is its complete generality. ORMGEN.PC can generate a finite-element mesh for almost any conceivable 2-D geometry. Disks, plates, cylinders, and geometries with holes, such as the standard compact tension specimen, can be readily modeled. Either surface or embedded flaws can be analyzed; in other words, either one or two crack tips can be included in the model. For cracked geometries, the only restrictions are that the crack lie in the Y = 0 plane and that this plane be a plane of symmetry.

ORMGEN.PC writes the element connectivities and nodal point coordinates in either an ORVIRT.PC or ADINA/ORVIRT format. A user then examines these files and edits them to include the appropriate boundary conditions, material properties, applied loads, and fracture analysis data. A complete fracture analysis can be performed in a matter of minutes on an IBM PC/AT or PC/XT microcomputer using the ORMGEN.PC and ORVIRT.PC package. For ADINA/ORVIRT, the ADINA input file is transmitted to a mainframe computer via a modem and communications program. The resulting ADINA analysis is then used as input for a subsequent fracture analysis.

ORMGEN.PC employs modified versions of subroutines presented in Ref. 5 for the subdivision procedure. Additional routines have been added to provide the appropriate mesh definition at the crack tip(s) for follow-up analysis by either ORVIRT.PC or ADINA/ORVIRT. There are two types of blocks that can be employed: (1) regular blocks and (2) crack-tip blocks. Regular blocks are subdivided as described previously by specifying the number of subdivisions in the local ξ and η directions. The user may choose from a library of four crack-tip blocks or configurations as shown in Figs. 2 and 3. Two crack-tip block types are available

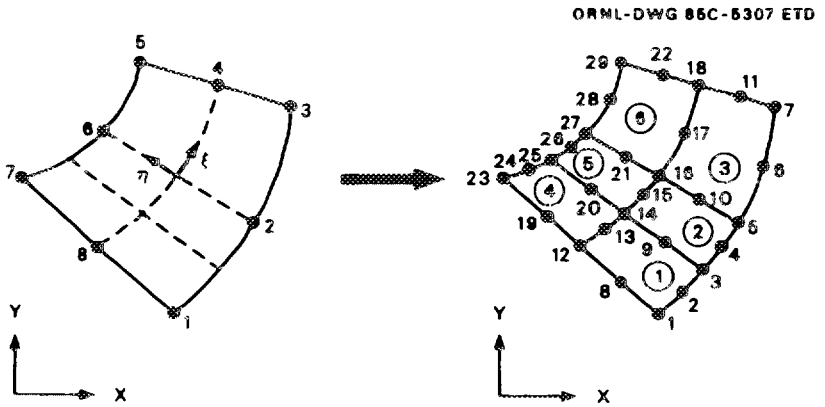

Fig. 1. Subdivision of regular block into its elements and nodal points.

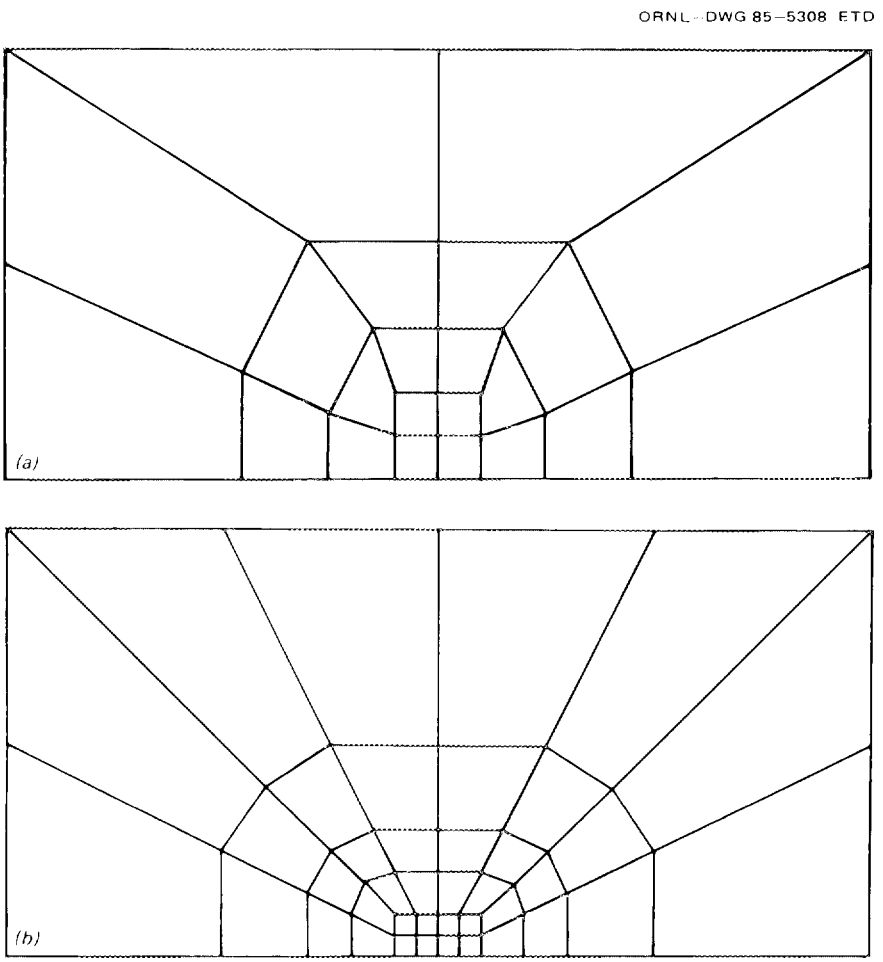

Fig. 2. Crack-tip blocks compatible with ORVIRT.PC fracture analysis program.

ORNL-DWG 85-5309 ETD

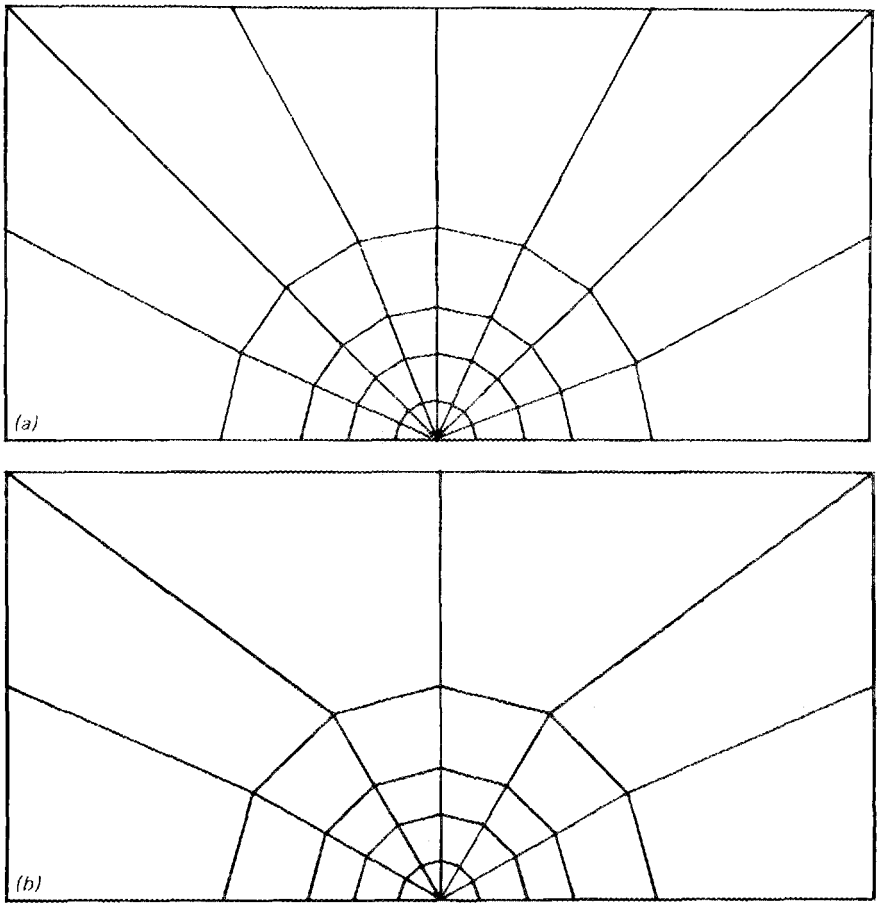

Fig. 3. Crack-tip blocks compatible with ADINA/ORVIRT fracture analysis system.

for each of the fracture analysis programs above, one geometry being somewhat coarser than the other in each case. The authors' experience indicates that both types of crack-tip blocks give essentially the same accuracy, with the coarser crack-tip block type generally being the easier to implement or merge with surrounding regular blocks.

Finally, as discussed in Ref. 5, it should be appreciated that the final nodal numbering sequence obtained from mesh generation programs seldom results in a minimum bandwidth for banded solvers (e.g., ADINA/ORVIRT) or a minimum frontwidth for frontal solvers (e.g., ORVIRT.PC). In ORMGEN.PC, each block is processed sequentially, according to the block identification numbers with crack-tip blocks always being first. Thus, a degree of banding can be attained by a judicious ordering[5] and orientation of the structural blocks.

3. ORVIRT.PC AND ADINA/ORVIRT FRACTURE ANALYSIS PROGRAMS

After deLorenzi,[6] the ORVIRT programs employ a virtual crack extension technique that has been modified to include the effects of thermal strains.[4,7] The method requires calculation of the released energy G^* corresponding to a virtual crack advance in a cracked body subjected to surface tractions F_α, body force f_α, and temperature distribution T (Fig. 4). Points of configuration I (prior to crack advance) are mapped into configuration II (after crack advance) by the mapping

$$\bar{x}_\alpha = x_\alpha + \Delta x_\alpha \ , \tag{1}$$

where x_α and $\bar{x}_\alpha$ correspond to coordinates in configurations I and II, respectively, and Δx_α is the incremental change in coordinates throughout the body accompanying a virtual crack extension Δa at the crack tip.

Using index notation, it can be shown[4,6] that the energy release parameter G^* becomes

$$G^* = \int_V \left(\sigma_{\alpha\beta} \frac{\partial u_\alpha}{\partial x_\delta} - W\delta_{\delta\beta}\right) \frac{\partial \Delta x_\delta}{\partial x_\beta} \, dV + \int_V \left(\sigma_{\alpha\beta} \frac{\partial \theta_{\alpha\beta}}{\partial x_\delta} - f_\alpha \frac{\partial u_\alpha}{\partial x_\delta}\right) \times \Delta x_\delta \, dV - \int_S t_\alpha \frac{\partial u_\alpha}{\partial x_\beta} \Delta x_\beta \, dS \ , \tag{2}$$

where

x_α = cartesian coordinate system,

V = volume,

S = surface of the cracked body,

$\sigma_{\alpha\beta}$ = stress tensor,

u_α = displacement vector,

W = strain energy density,

f_α = body force vector,

t_α = surface traction vector,

$\theta_{\alpha\beta}$ = strains of free thermal expansion,

$\delta_{\alpha\beta}$ = Kronecker's delta,

Δx_α = mapping function defined above,

and α, β, and δ take on the range 1, 2, 3, and the summation convention for repeated indices is used. The strain energy density W is given by

ORNL-DWG 82-8942

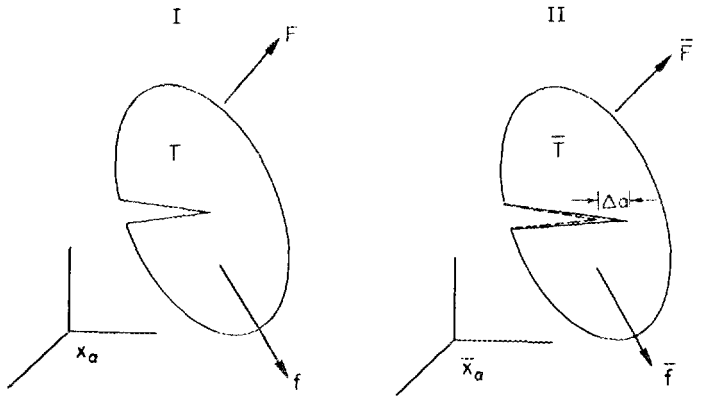

Fig. 4. Crack configuration before and after crack extension.

$$W = \int \sigma_{\alpha\beta}\, d\varepsilon'_{\alpha\beta} \ ,$$

$$\varepsilon'_{\alpha\beta} = \varepsilon_{\alpha\beta} - \theta_{\alpha\beta} \ , \tag{3}$$

where the mechanical strain components $\varepsilon'_{\alpha\beta}$ are defined in terms of the total strains $\varepsilon_{\alpha\beta}$ and the strains of free thermal expansion $\theta_{\alpha\beta}$.

The energy release rate G is given by

$$G = G^*/\Delta A \ , \tag{4}$$

where ΔA is the area increment covered by the virtual crack extension. The mode I stress-intensity factor K_I is related to G by

$$K_I = \begin{cases} \sqrt{GE} & \text{plane stress} \\ \sqrt{\dfrac{GE}{1-\nu^2}} & \text{plane strain} \end{cases} \ , \tag{5}$$

where E is the elastic modulus and ν is Poisson's ratio.

Both ORVIRT.PC and ADINA/ORVIRT utilize mappings Δx_α so that it is only necessary to evaluate Eq. (2) over a small core of elements in a

"crack-tip zone." Thus, ORMGEN.PC constrains a user to model the crack-tip region with crack-tip blocks that have the required arrangement of elements in this zone. ORVIRT.PC utilizes eight-noded, isoparametric, quadrilateral elements throughout a model, including the crack-tip zone (see Fig. 2), while ADINA/ORVIRT requires an arrangement of collapsed wedge elements near the crack tip (see Fig. 3). In addition, ORMGEN.PC is capable of generating either quarter-point elements at the crack tip for brittle fracture analysis or blunting elements for ductile fracture analysis using ADINA/ORVIRT.

4. SYSTEM REQUIREMENTS AND PROGRAM OPERATION

The system requirements for executing ORMGEN.PC are

1. IBM PC/AT or PC/XT, 512K minimum memory, hard disk;
2. math coprocessor;
3. IBM Professional Fortran Compiler, Version 1 or 2; and
4. modem and communications software for the ADINA/ORVIRT option.

Executing program ORMGEN.PC consists of installing the IBM Fortran Compiler routines, copying the ORMGEN.PC program diskette to the hard disk, preparing an input file FORT5, and running the program. An echo of the input data, as well as the element connectivities and nodal point coordinates, are written to the output file FORT6. For the ORVIRT.PC format option, both element connectivities and nodal point coordinates are written to output file FORT1. For the ADINA/ORVIRT format option, element connectivities are written to file FORT1, while nodal point coordinates are written to file FORT2. The step-by-step procedure for program execution is as follows:

1. Install IBM Professional Fortran Compiler, Version 1 or 2, according to the instructions in the compiler manual.
2. Copy the source module ORMGEN.FOR from the program diskette to the hard disk.
3. Compile the source module per the instructions in the compiler manual.
4. Create the input file FORT5 using an appropriate editor or word processor.
5. Execute the program by typing ORMGEN<cr> where <cr> is a carriage return.

ACKNOWLEDGMENTS

The support and encouragement provided by R. D. Cheverton are very much appreciated. Special thanks are due the ETD Reports Office for editing, makeup, graphics, and final processing.

REFERENCES

1. J. W. Bryson, *ORVIRT.PC: A 2-D Finite-Element Fracture Analysis Program for a Microcomputer*, NUREG/CR-4367 (ORNL-6208), Martin Marietta Energy Systems, Inc., Oak Ridge Natl. Lab., October 1985.

2. B. R. Bass and J. W. Bryson, *Applications of Energy Release Rate Techniques to Part-Through Cracks in Plates and Cylinders, Vol. 1. ORMGEN-3D: A Finite Element Mesh Generator for 3-Dimensional Crack Geometries*, NUREG/CR-2997/V1 (ORNL/TM-8527/V1), Union Carbide Corp. Nuclear Div., Oak Ridge Natl. Lab., December 1982.

3. K. J. Bathe, *ADINA — A Finite Element Program for Automatic Dynamic Incremental Nonlinear Analysis*, Report 82448-1, Massachusetts Institute of Technology, Cambridge, Mass., September 1975 (revised December 1978).

4. B. R. Bass and J. W. Bryson, *Applications of Energy Release Rate Techniques to Part-Through Cracks in Plates and Cylinders, Vol. 2. ORVIRT: A Finite Element Program for Energy Release Rate Calculations for 2-Dimensional and 3-Dimensional Crack Models*, NUREG/CR-2997/V2 (ORNL/TM-8527/V2), Union Carbide Corp. Nuclear Div., Oak Ridge Natl. Lab., February 1983.

5. E. Hinton and D. R. J. Owen, *An Introduction to Finite Element Computations*, Pineridge Press Ltd., Swansea, Wales, 1979.

6. H. G. deLorenzi, "On the Energy Release Rate and the J-Integral for 3-D Crack Configuration," *Int. J. Fract.* 19, 183–93 (1982).

7. B. R. Bass and J. W. Bryson, "Energy Release Rate Techniques for Combined Thermo-Mechanical Loading," *Int. J. Fract.* 22, R3–R7 (1983).

Appendix A

ORMGEN.PC USER INSTRUCTIONS

CARD SET 1 — TITLE CARD (18A4), one card

Cols. 1—72	TITLE	Title of the problem

CARD SET 2 — CONTROL CARD FOR MESH GENERATION (4I5), one card

Cols. 1—5	NTIPS	Number of crack tips to be modeled, $0 \leq NTIPS \leq 2$
6—10	NPONT	Total number of block points
11—15	NBLOC	Total number of blocks
16—20	NFORM	Format parameter for output 0 — ORVIRT.PC compatible 1 — ADINA/ORVIRT compatible

Notes:

1. Only eight-noded blocks are permitted.

2. There are two types of blocks: (1) regular blocks and (2) crack-tip blocks. Regular blocks are subdivided into elements by specifying the number of subdivisions in the local ξ and η directions, respectively (see Fig. 1). Crack-tip blocks are of four types as shown in Figs. 5—8. These special blocks always have the given mesh structure and must be employed at the crack tip(s).

3. For crack geometries such as $NTIPS \neq 0$, the crack must lie in the $Y = 0$ plane, and this plane must be a plane of symmetry.

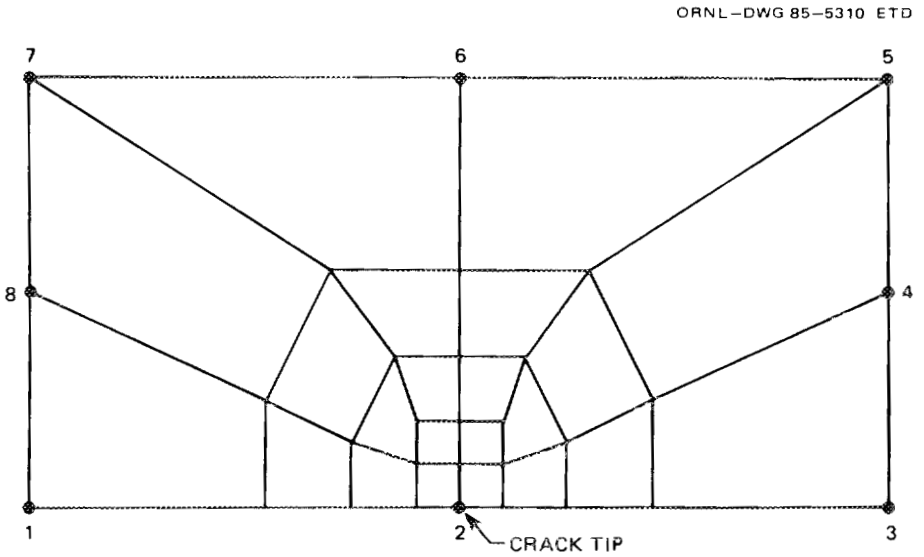

Fig. 5. ORVIRT.PC compatible crack-tip block, ITYPE=1, and block point numbering convention. KNODS(IBLOCK,2) must be at crack tip.

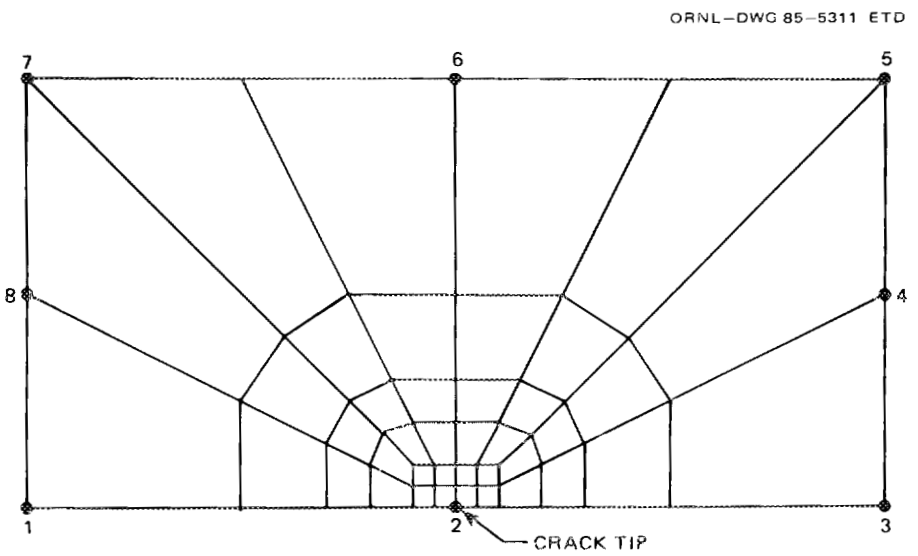

Fig. 6. ORVIRT.PC compatible crack-tip block, ITYPE=2, and block point numbering convention. KNODS(IBLOC,2) must be at crack tip.

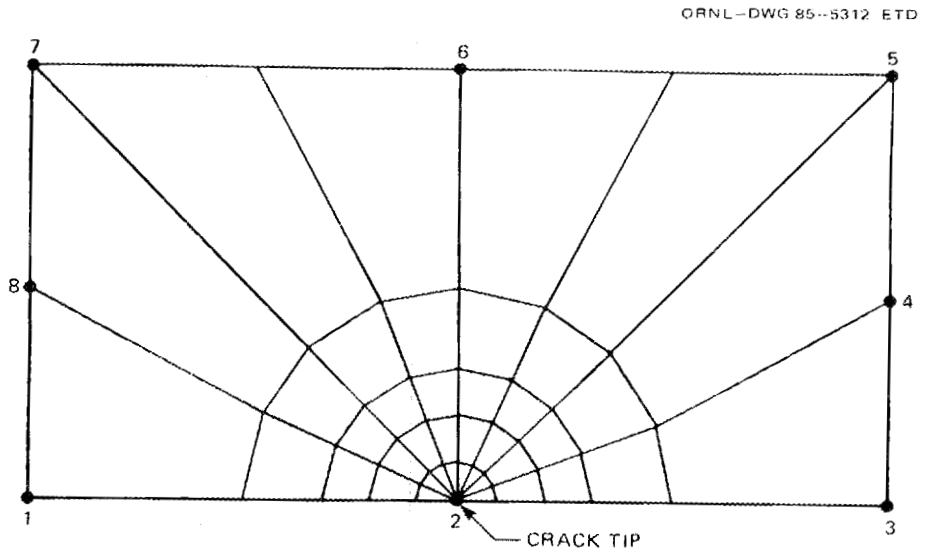

Fig. 7. ADINA/ORVIRT compatible crack-tip block, ITYPE=3, and block point numbering convention. KNODS(IBLOC,2) must be at crack tip.

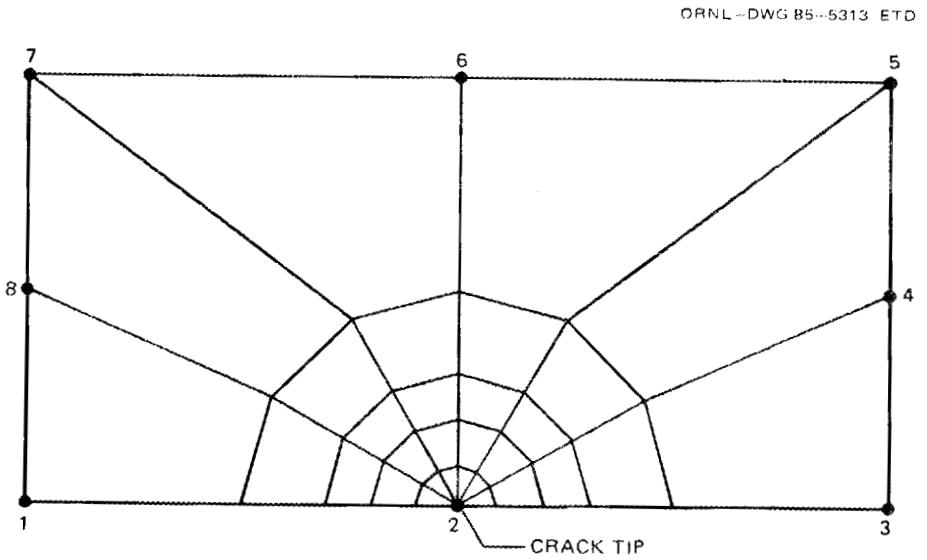

Fig. 8. ADINA/ORVIRT compatible crack-tip block, ITYPE=4, and block point numbering convention. KNODS(IBLOC,2) must be at crack tip.

CARD SET 3 — BLOCK CONNECTIVITY CARDS (10I5), NBLOC cards

Cols. 1—5	IBLOC	Block number
6—10	MATBLK(IBLOC)	Block material property number
11—15	KNODS(IBLOC,1)	1st block point connection number
16—20	KNODS(IBLOC,2)	2nd block point connection number
.		
.		
.		
49—50	KNODS(IBLOC,8)	8th block point connection number

Notes:

1. All elements within a block will be given the material property number of the block. Both ORVIRT.PC and ADINA/ORVIRT require that the material properties of all elements be assigned at the point at which the connectivities of elements are defined. For this reason, the material property numbers for the crack-tip elements are automatically assigned by ORMGEN.PC. In the case of input designated for ADINA/ORVIRT, the crack-tip element material property numbers will be positive, while for ORVIRT.PC, they will be negative.

2. The block point connection numbers must be listed counterclockwise, starting from any corner point (see Fig. 1). This implies that the global X-Y coordinate system must be a right-handed one.

3. For crack-tip blocks, block point connection numbers must be listed counterclockwise so that KNODS(IBLOC,2) is at the crack tip (see Figs. 5—8).

4. Only eight-noded, quadrilateral blocks are permitted. These will then be appropriately subdivided into eight-noded, isoparametric, quadrilateral elements. Triangular blocks formed by collapsing quadrilateral blocks are not allowed.

CARD SET 4 — BLOCK POINT COORDINATES (I5,2F10.4), one card for each block point whose coordinates are to be input

Cols. 1—5	IPONT	Block point number
6—15	BCORD(IPONT,1)	X-coordinate of point
16—25	BCORD(IPONT,2)	Y-coordinate of point

Notes:

1. The coordinates of the highest numbered block point must be input whether or not it is a corner-point.

2. The total number of cards in this set will generally be less than NPONT (see CARD SET 2) because for straight block sides it is only necessary to specify corner-point coordinates; midside point coordinates are automatically determined if on a straight side. Inclusion of midside points that are not on a straight line with the corner-points produce curved block sides via a quadratic fit from the shape functions for eight-noded isoparametric quadrilaterals. Thus, a user may model disks and cross sections of cylinders by properly choosing the midside point coordinates.

OMIT THE FOLLOWING CARD SET IF NTIPS = 0 (SEE CARD SET 2)

CARD SET 5 — CRACK-TIP BLOCK CONTROL CARD(S) (3I5), NTIPS cards, one for each crack-tip block

Cols. 1—5	KBLOC	Crack-tip block number, 0 < KBLOC ≤ 2
6—10	ITYPE	Crack-tip mesh configuration 1 — ORVIRT.PC compatible mesh as shown in Fig. 5 2 — ORVIRT.PC compatible mesh as shown in Fig. 6 3 — ADINA/ORVIRT compatible mesh as shown in Fig. 7 4 — ADINA/ORVIRT compatible mesh as shown in Fig. 8
11—15	IKIND(KBLOC)	Quarter-point or blunting option, applicable only for ITYPE = 3 or ITYPE = 4. Leave blank for ITYPE = 1 or ITYPE = 2 0 — Quarter-point wedge elements at crack tip for brittle fracture analysis 1 — Blunting elements at crack tip for ductile fracture analysis

Notes:

1. Input CARD SET 5 a total of NTIPS times.

2. It is recommended that the 2 to 1 aspect ratio shown in Figs. 5—8 be maintained for the relative dimensions of the different crack-tip block types. Block corner-point coordinates that deviate from this aspect ratio produce distorted mesh configurations, which may in turn produce erratic results in a subsequent ORVIRT.PC or ADINA/ORVIRT analysis.

3. For two crack-tip blocks, IKIND(1) must equal IKIND(2). Also, ITYPE = 2 is not allowed for two crack-tip blocks, that is, NTIPS = 2. Appropriate error messages will be activated if either of these stipulations are violated.

4. Figure 9 shows the blunting elements utilized for IKIND = 1.

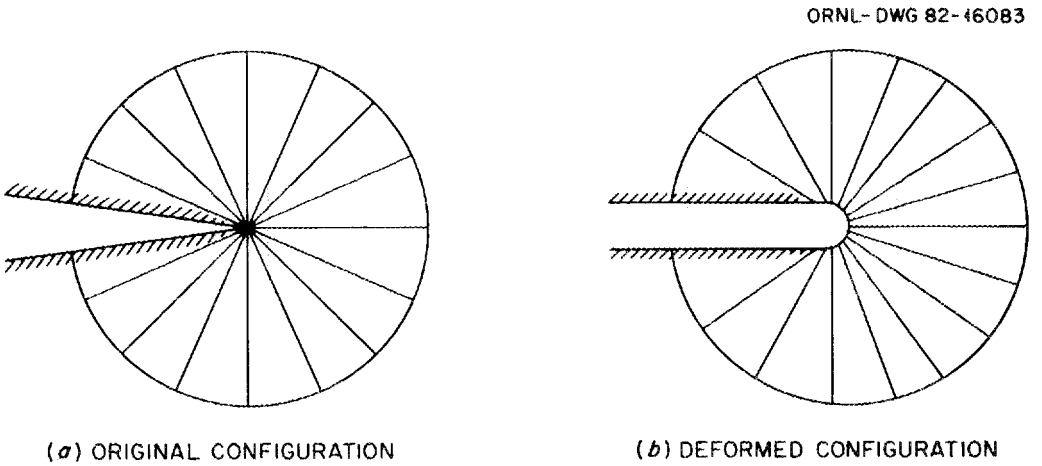

Fig. 9. Blunting elements appropriate for ductile fracture analysis using ADINA/ORVIRT.

CARD SET 6 — REGULAR BLOCK SUBDIVISION

6(a) CONTROL CARD (3I5), one card (see Fig. 1)

Cols.	1—5	JBLOC	Regular block number
	6—10	NDIVX	Number of subdivisions in local ξ direction
	11—15	NDIVY	Number of subdivisions in local η direction

6(b) WEIGHTING FACTORS FOR SUBDIVISION IN THE LOCAL ξ DIRECTION (8F10.2)

Cols.	1—10	WEITX(1)	Relative weights of subdivision proceeding
	11—20	WEITX(2)	from $\xi = -1$ to $\xi = +1$
	.		
	.		
	.		
	etc.	WEITX(NDIVX)	

6(c) WEIGHTING FACTORS FOR SUBDIVISION IN THE LOCAL η direction (8F10.2)

Cols.	1—10	WEITY(1)	Relative weights of subdivision proceeding
	11—20	WEITY(2)	from $\eta = -1$ to $\eta = +1$.
	.		
	.		
	.		
	etc.	WEITY(NDIVY)	

Notes:

1. Input CARD SET 6 a total of NREG times, where NREG = (NBLOC — NTIPS).

2. Weighting factors define the relative length of sides of elements in a particular block and, therefore, their absolute values are immaterial. For example, for the three-element subdivision in the ξ direction shown in Fig. 1,

1.0	1.0	2.0
or 0.3	0.3	0.6
or 10.	10.	20.

give the same subdivision.

3. A user must be careful to maintain compatibility along block interfaces when specifying the number of elements and weighting factors in adjacent blocks.

4. For regular blocks, node numbering (see Fig. 1) commences at $\xi = -1$, $\eta = -1$ and proceeds along $\eta = -1$ from $\xi = -1$ to $\xi = +1$. η is then incremented appropriately in the positive η direction, and nodes again are numbered from $\xi = -1$ and $\xi = +1$. This pattern continues until $\xi = +1$ and $\eta = +1$. Elements are numbered in an analogous fashion. A nodal point renumbering scheme is employed in the program that ensures a unique node number for nodes along block interfaces.

Appendix B

EXAMPLE PROBLEMS

Five example problems are presented that demonstrate the flexibility of the ORMGEN.PC program. Finite-element models are generated for an uncracked thick cylinder, a center-cracked plate, a center-cracked disk, a beam with an embedded crack, and a compact tension specimen. Schematics that show the block subdivision of the model (Figs. 10–14) are followed by listings of the input file FORT5 and output file FORT6 as produced on an EPSON FX-185 printer.

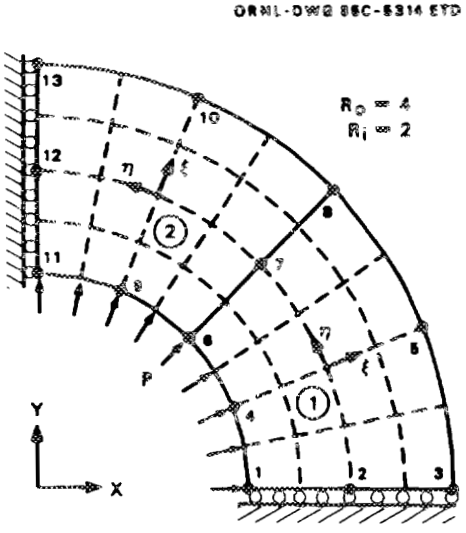

Fig. 10. Example problem 1 — uncracked thick cylinder.

Example Problem 1. User input file FORT5

```
UNCRACKED THICK CYLINDER
    0   13    2    0
    1    1    1    2    3    5    8    7    6    4
    2    1    6    7    8   10   13   12   11    9
    1        2.0        0.0
    3        4.0        0.0
    4    1.84776    0.76537
    5    3.69552    1.53073
    6    1.41421    1.41421
    8    2.82843    2.82843
    9    0.76537    1.84776
   10    1.53073    3.69552
   11        0.0        2.0
   13        0.0        4.0
    1    4    4
1.0       1.0       1.0       1.0
1.0       1.0       1.0       1.0
    2    4    4
1.0       1.0       1.0       1.0
1.0       1.0       1.0       1.0
```

Example Problem 1. Output summary file FORT6

```
UNCRACKED THICK CYLINDER

NTIPS =   0
NPONT =  13
NBLOC =   2
NFORM =   0

DATA BLOCKS

BLOCK MAT.                DEFINITION POINTS
  1    1    1    2    3    5    8    7    6    4
  2    1    6    7    8   10   13   12   11    9

LOCATION POINTS

POINT      X          Y
  1     2.0000     0.0000
  2     3.0000     0.0000
  3     4.0000     0.0000
  4     1.8478     0.7654
  5     3.6955     1.5307
  6     1.4142     1.4142
  7     2.1213     2.1213
  8     2.8284     2.8284
  9     0.7654     1.8478
 10     1.5307     3.6955
 11     0.0000     2.0000
 12     0.0000     3.0000
 13     0.0000     4.0000

DATA BLOCK NO.   1
-----------------

NO. OF DIV. IN FIRST DIRECTION =   4

NO. OF DIV. IN SECOND DIRECTION =   4

LIST OF WEIGHTING FACTORS IN FIRST DIRECTION
    1.00       1.00       1.00       1.00

LIST OF WEIGHTING FACTORS IN SECOND DIRECTION
    1.00       1.00       1.00       1.00

DATA BLOCK NO.   2
-----------------

NO. OF DIV. IN FIRST DIRECTION =   4

NO. OF DIV. IN SECOND DIRECTION =   4
```

LIST OF WEIGHTING FACTORS IN FIRST DIRECTION
1.00 1.00 1.00 1.00

LIST OF WEIGHTING FACTORS IN SECOND DIRECTION
1.00 1.00 1.00 1.00

**** GENERATED MESH DATA ****

NUMBER OF NODAL POINTS = 121

NUMBER OF ELEMENTS = 32

ELEMENT NODAL CONNECTIONS

ELE.	MAT.	NODAL POINTS							
1	1	1	2	3	11	17	16	15	10
2	1	3	4	5	12	19	18	17	11
3	1	5	6	7	13	21	20	19	12
4	1	7	8	9	14	23	22	21	13
5	1	15	16	17	25	31	30	29	24
6	1	17	18	19	26	33	32	31	25
7	1	19	20	21	27	35	34	33	26
8	1	21	22	23	28	37	36	35	27
9	1	29	30	31	39	45	44	43	38
10	1	31	32	33	40	47	46	45	39
11	1	33	34	35	41	49	48	47	40
12	1	35	36	37	42	51	50	49	41
13	1	43	44	45	53	59	58	57	52
14	1	45	46	47	54	61	60	59	53
15	1	47	48	49	55	63	62	61	54
16	1	49	50	51	56	65	64	63	55
17	1	57	58	59	67	73	72	71	66
18	1	59	60	61	68	75	74	73	67
19	1	61	62	63	69	77	76	75	68
20	1	63	64	65	70	79	78	77	69
21	1	71	72	73	81	87	86	85	80
22	1	73	74	75	82	89	88	87	81
23	1	75	76	77	83	91	90	89	82
24	1	77	78	79	84	93	92	91	83
25	1	85	86	87	95	101	100	99	94
26	1	87	88	89	96	103	102	101	95
27	1	89	90	91	97	105	104	103	96
28	1	91	92	93	98	107	106	105	97
29	1	99	100	101	109	115	114	113	108
30	1	101	102	103	110	117	116	115	109
31	1	103	104	105	111	119	118	117	110
32	1	105	106	107	112	121	120	119	111

NODAL POINT COORDINATES

NODE	X	Y
1	2.00000	0.00000
2	2.25000	0.00000
3	2.50000	0.00000
4	2.75000	0.00000
5	3.00000	0.00000
6	3.25000	0.00000
7	3.50000	0.00000
8	3.75000	0.00000
9	4.00000	0.00000
10	1.98831	0.20227
11	2.48539	0.25283
12	2.98247	0.30340
13	3.47955	0.35396
14	3.97662	0.40453
15	1.95904	0.39725
16	2.20392	0.44691
17	2.44880	0.49656
18	2.69368	0.54622
19	2.93856	0.59587
20	3.18345	0.64553
21	3.42833	0.69518
22	3.67321	0.74484
23	3.91809	0.79449
24	1.91219	0.58495
25	2.39024	0.73119
26	2.86829	0.87742
27	3.34634	1.02366
28	3.82438	1.16989
29	1.84776	0.76537
30	2.07873	0.86104
31	2.30970	0.95671
32	2.54067	1.05238
33	2.77164	1.14805
34	3.00261	1.24372
35	3.23358	1.33939
36	3.46455	1.43506
37	3.69552	1.53073
38	1.76575	0.93850
39	2.20718	1.17313
40	2.64862	1.40775
41	3.09006	1.64238
42	3.53149	1.87700
43	1.66615	1.10436
44	1.87442	1.24240
45	2.08269	1.38044
46	2.29096	1.51849
47	2.49923	1.65653
48	2.70749	1.79458

49	2.91576	1.93262
50	3.12403	2.07066
51	3.33230	2.20871
52	1.54897	1.26292
53	1.93621	1.57866
54	2.32346	1.89439
55	2.71070	2.21012
56	3.09795	2.52585
57	1.41421	1.41421
58	1.59099	1.59099
59	1.76777	1.76777
60	1.94454	1.94454
61	2.12132	2.12132
62	2.29810	2.29810
63	2.47487	2.47487
64	2.65165	2.65165
65	2.82843	2.82843
66	1.26292	1.54897
67	1.57866	1.93621
68	1.89439	2.32346
69	2.21012	2.71070
70	2.52585	3.09795
71	1.10436	1.66615
72	1.24240	1.87442
73	1.38044	2.08269
74	1.51849	2.29096
75	1.65653	2.49922
76	1.79458	2.70749
77	1.93262	2.91576
78	2.07066	3.12403
79	2.20871	3.33230
80	0.93850	1.76575
81	1.17313	2.20718
82	1.40775	2.64862
83	1.64238	3.09006
84	1.87700	3.53149
85	0.76537	1.84776
86	0.86104	2.07873
87	0.95671	2.30970
88	1.05238	2.54067
89	1.14805	2.77164
90	1.24372	3.00261
91	1.33939	3.23358
92	1.43506	3.46455
93	1.53073	3.69552
94	0.58495	1.91219
95	0.73119	2.39024
96	0.87742	2.86829
97	1.02366	3.34634
98	1.16989	3.82438
99	0.39725	1.95904
100	0.44691	2.20392

101	0.49656	2.44880
102	0.54622	2.69368
103	0.59587	2.93857
104	0.64553	3.18345
105	0.69518	3.42833
106	0.74484	3.67321
107	0.79449	3.91809
108	0.20227	1.98831
109	0.25283	2.48539
110	0.30340	2.98247
111	0.35396	3.47955
112	0.40453	3.97662
113	0.00000	2.00000
114	0.00000	2.25000
115	0.00000	2.50000
116	0.00000	2.75000
117	0.00000	3.00000
118	0.00000	3.25000
119	0.00000	3.50000
120	0.00000	3.75000
121	0.00000	4.00000

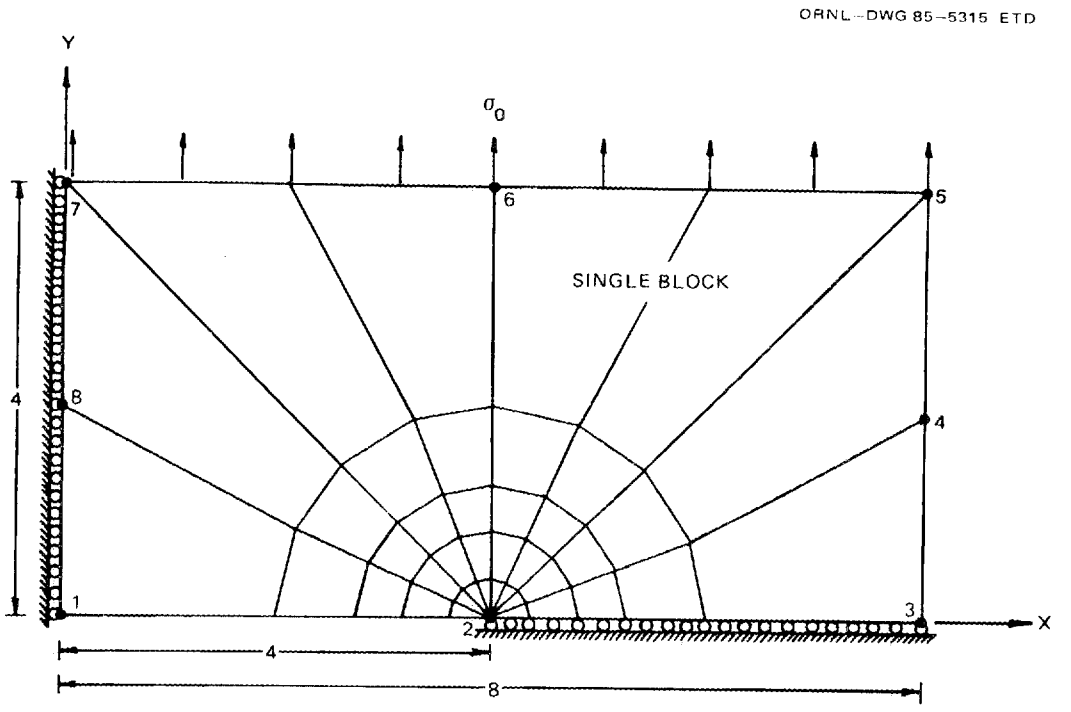

Fig. 11. Example problem 2 — center-cracked plate, tension loading.

Example Problem 2. User input file FORT5

```
CENTER CRACKED PLATE, SINGLE BLOCK
    1     8     1     1
    1     1     1     2     3     4     5     6     7     8
    1         0.0         0.0
    3         8.0         0.0
    5         8.0         4.0
    7         0.0         4.0
    8         0.0         2.0
    1     3     1
```

Example Problem 2. Output summary file FORT6

```
CENTER CRACKED PLATE, SINGLE BLOCK

NTIPS =   1
NPONT =   8
NBLOC =   1
NFORM =   1

DATA BLOCKS

BLOCK MAT.              DEFINITION POINTS
  1    1    1    2    3    4    5    6    7    8

LOCATION POINTS

POINT      X          Y
  1     0.0000     0.0000
  2     4.0000     0.0000
  3     8.0000     0.0000
  4     8.0000     2.0000
  5     8.0000     4.0000
  6     4.0000     4.0000
  7     0.0000     4.0000
  8     0.0000     2.0000

DATA BLOCK NO.  1
-----------------

CRACK TIP BLOCK, ITYPE = 3, IKIND = 1


**** GENERATED MESH DATA ****


NUMBER OF NODAL POINTS = 147

NUMBER OF ELEMENTS =  40

ELEMENT NODAL CONNECTIONS

ELE.  MAT.              NODAL POINTS
  1    1    1   27   29    3   18   28   19    2
  2    1    3   29   31    5   19   30   20    4
  3    1    5   31   33    7   20   32   21    6
  4    1    7   33   35    9   21   34   22    8
  5    1    9   35   37   11   22   36   23   10
  6    1   11   37   39   13   23   38   24   12
  7    1   13   39   41   15   24   40   25   14
  8    1   15   41   43   17   25   42   26   16
```

9	1	27	53	55	29	44	54	45	28
10	1	29	55	57	31	45	56	46	30
11	1	31	57	59	33	46	58	47	32
12	1	33	59	61	35	47	60	48	34
13	1	35	61	63	37	48	62	49	36
14	1	37	63	65	39	49	64	50	38
15	1	39	65	67	41	50	66	51	40
16	1	41	67	69	43	51	68	52	42
17	1	53	79	81	55	70	80	71	54
18	1	55	81	83	57	71	82	72	56
19	1	57	83	85	59	72	84	73	58
20	1	59	85	87	61	73	86	74	60
21	1	61	87	89	63	74	88	75	62
22	1	63	89	91	65	75	90	76	64
23	1	65	91	93	67	76	92	77	66
24	1	67	93	95	69	77	94	78	68
25	1	79	105	107	81	96	106	97	80
26	1	81	107	109	83	97	108	98	82
27	1	83	109	111	85	98	110	99	84
28	1	85	111	113	87	99	112	100	86
29	1	87	113	115	89	100	114	101	88
30	1	89	115	117	91	101	116	102	90
31	1	91	117	119	93	102	118	103	92
32	1	93	119	121	95	103	120	104	94
33	1	105	131	133	107	122	132	123	106
34	1	107	133	135	109	123	134	124	108
35	1	109	135	137	111	124	136	125	110
36	1	111	137	139	113	125	138	126	112
37	1	113	139	141	115	126	140	127	114
38	1	115	141	143	117	127	142	128	116
39	1	117	143	145	119	128	144	129	118
40	1	119	145	147	121	129	146	130	120

NODAL POINT COORDINATES

NODE	Y	Z
1	4.00000	0.00000
2	4.00000	0.00000
3	4.00000	0.00000
4	4.00000	0.00000
5	4.00000	0.00000
6	4.00000	0.00000
7	4.00000	0.00000
8	4.00000	0.00000
9	4.00000	0.00000
10	4.00000	0.00000
11	4.00000	0.00000
12	4.00000	0.00000
13	4.00000	0.00000
14	4.00000	0.00000
15	4.00000	0.00000
16	4.00000	0.00000

17	4.00000	0.00000
18	4.20000	0.00000
19	4.18480	0.07656
20	4.14144	0.14144
21	4.07656	0.18480
22	4.00000	0.20000
23	3.92344	0.18480
24	3.85856	0.14144
25	3.81520	0.07656
26	3.80000	0.00000
27	4.40000	0.00000
28	4.38480	0.07656
29	4.36956	0.15308
30	4.32620	0.21796
31	4.28284	0.28284
32	4.21796	0.32620
33	4.15308	0.36956
34	4.07656	0.38480
35	4.00000	0.40000
36	3.92344	0.38480
37	3.84692	0.36956
38	3.78204	0.32620
39	3.71716	0.28284
40	3.67380	0.21796
41	3.63044	0.15308
42	3.61520	0.07656
43	3.60000	0.00000
44	4.60000	0.00000
45	4.55432	0.22960
46	4.42428	0.42428
47	4.22960	0.55432
48	4.00000	0.60000
49	3.77040	0.55432
50	3.57572	0.42428
51	3.44568	0.22960
52	3.40000	0.00000
53	4.80000	0.00000
54	4.76956	0.15308
55	4.73912	0.30616
56	4.65240	0.43592
57	4.56568	0.56568
58	4.43592	0.65240
59	4.30616	0.73912
60	4.15308	0.76956
61	4.00000	0.80000
62	3.84692	0.76956
63	3.69384	0.73912
64	3.56408	0.65240
65	3.43432	0.56568
66	3.34760	0.43592
67	3.26088	0.30616
68	3.23044	0.15308

69	3.20000	0.00000
70	5.05000	0.00000
71	4.97008	0.40180
72	4.74248	0.74248
73	4.40180	0.97008
74	4.00000	1.05000
75	3.59820	0.97008
76	3.25752	0.74248
77	3.02992	0.40180
78	2.95000	0.00000
79	5.30000	0.00000
80	5.25052	0.24876
81	5.20104	0.49748
82	5.06016	0.70836
83	4.91924	0.91924
84	4.70836	1.06016
85	4.49748	1.20104
86	4.24876	1.25052
87	4.00000	1.30000
88	3.75124	1.25052
89	3.50252	1.20104
90	3.29164	1.06016
91	3.08076	0.91924
92	2.93984	0.70836
93	2.79896	0.49748
94	2.74948	0.24876
95	2.70000	0.00000
96	5.60000	0.00000
97	5.47820	0.61228
98	5.13136	1.13136
99	4.61228	1.47820
100	4.00000	1.60000
101	3.38772	1.47820
102	2.86864	1.13136
103	2.52180	0.61228
104	2.40000	0.00000
105	6.00000	0.00000
106	5.92388	0.38268
107	5.84776	0.76536
108	5.63096	1.08976
109	5.41420	1.41420
110	5.08976	1.63096
111	4.76536	1.84776
112	4.38268	1.92388
113	4.00000	2.00000
114	3.61732	1.92388
115	3.23464	1.84776
116	2.91024	1.63096
117	2.58580	1.41420
118	2.36904	1.08976
119	2.15224	0.76536
120	2.07612	0.38268

121	2.00000	0.00000
122	7.00000	0.00000
123	6.92388	1.38268
124	6.70712	2.70712
125	5.38268	2.92388
126	4.00000	3.00000
127	2.61732	2.92388
128	1.29288	2.70712
129	1.07612	1.38268
130	1.00000	0.00000
131	8.00000	0.00000
132	8.00000	1.00000
133	8.00000	2.00000
134	8.00000	3.00000
135	8.00000	4.00000
136	7.00000	4.00000
137	6.00000	4.00000
138	5.00000	4.00000
139	4.00000	4.00000
140	3.00000	4.00000
141	2.00000	4.00000
142	1.00000	4.00000
143	0.00000	4.00000
144	0.00000	3.00000
145	0.00000	2.00000
146	0.00000	1.00000
147	0.00000	0.00000

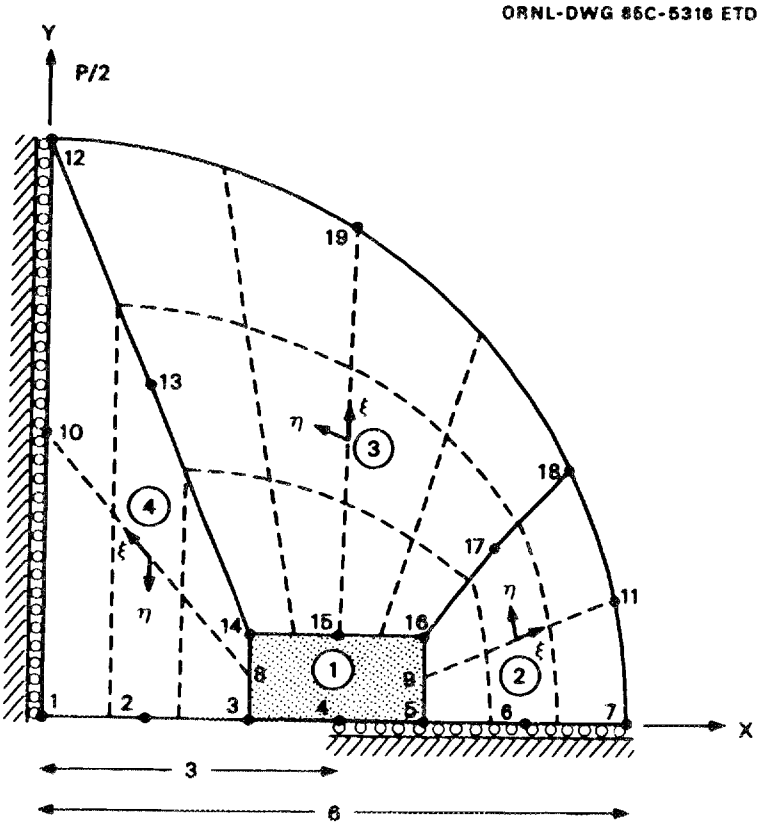

Fig. 12. Example problem 3 — center-cracked disk, center line point load.

Example Problem 3. User input file FORT5

```
DISK WITH CENTER CRACK
    1   19    4    0
    1    1    3    4    5    9   16   15   14    8
    2    1    5    6    7   11   18   17   16    9
    3    1   16   17   18   19   12   13   14   15
    4    1   14   13   12   10    1    2    3    8
    1       0.0       0.0
    3       2.1       0.0
    5       3.9       0.0
    7       6.0       0.0
   11     5.848     1.341
   12       0.0       6.0
   14       2.1       0.9
   16       3.9       0.9
   18       5.4     2.616
   19     3.186     5.084
    1    2
    2    3    2
1.0       1.0       1.0
1.0       1.0
    3    3    4
1.0       1.0       1.0
1.0       1.0       1.0       1.0
    4    3    2
1.0       1.0       1.0
1.0       1.0
```

Example Problem 3. Output summary file FORT6

```
DISK WITH CENTER CRACK

NTIPS =   1
NPONT =  19
NBLOC =   4
NFORM =   0

DATA BLOCKS

BLOCK MAT.              DEFINITION POINTS
  1     1     3     4     5     9    16    15    14     8
  2     1     5     6     7    11    18    17    16     9
  3     1    16    17    18    19    12    13    14    15
  4     1    14    13    12    10     1     2     3     8

LOCATION POINTS

POINT      X          Y
  1     0.0000     0.0000
  2     1.0500     0.0000
  3     2.1000     0.0000
  4     3.0000     0.0000
  5     3.9000     0.0000
  6     4.9500     0.0000
  7     6.0000     0.0000
  8     2.1000     0.4500
  9     3.9000     0.4500
 10     0.0000     3.0000
 11     5.8480     1.3410
 12     0.0000     6.0000
 13     1.0500     3.4500
 14     2.1000     0.9000
 15     3.0000     0.9000
 16     3.9000     0.9000
 17     4.6500     1.7580
 18     5.4000     2.6160
 19     3.1860     5.0840

DATA BLOCK NO.  1
-----------------

CRACK TIP BLOCK, ITYPE = 2

DATA BLOCK NO.  2
-----------------

NO. OF DIV. IN FIRST DIRECTION =  3

NO. OF DIV. IN SECOND DIRECTION =  2

LIST OF WEIGHTING FACTORS IN FIRST DIRECTION
```

1.00 1.00 1.00

LIST OF WEIGHTING FACTORS IN SECOND DIRECTION
1.00 1.00

DATA BLOCK NO. 3

NO. OF DIV. IN FIRST DIRECTION = 3

NO. OF DIV. IN SECOND DIRECTION = 4

LIST OF WEIGHTING FACTORS IN FIRST DIRECTION
1.00 1.00 1.00

LIST OF WEIGHTING FACTORS IN SECOND DIRECTION
1.00 1.00 1.00 1.00

DATA BLOCK NO. 4

NO. OF DIV. IN FIRST DIRECTION = 3

NO. OF DIV. IN SECOND DIRECTION = 2

LIST OF WEIGHTING FACTORS IN FIRST DIRECTION
1.00 1.00 1.00

LIST OF WEIGHTING FACTORS IN SECOND DIRECTION
1.00 1.00

**** GENERATED MESH DATA ****

NUMBER OF NODAL POINTS = 219

NUMBER OF ELEMENTS = 64

ELEMENT NODAL CONNECTIONS

ELE.	MAT.	NODAL POINTS							
1	-1	1	2	5	6	7	8	9	3
2	1	9	8	7	16	27	28	29	17
3	1	9	17	29	30	31	18	11	10
4	-1	1	3	9	10	11	12	13	4
5	1	5	14	21	22	23	15	7	6
6	1	7	15	23	24	25	26	27	16
7	1	11	18	31	32	33	34	35	19

8	1	13	12	11	19	35	36	37	20
9	1	21	38	47	48	49	39	23	22
10	1	23	39	49	50	51	40	25	24
11	1	25	40	51	52	53	41	27	26
12	1	27	41	53	54	55	42	29	28
13	1	29	42	55	56	57	43	31	30
14	1	31	43	57	58	59	44	33	32
15	1	33	44	59	60	61	45	35	34
16	1	35	45	61	62	63	46	37	36
17	1	47	64	73	74	75	65	49	48
18	1	49	65	75	76	77	66	51	50
19	1	51	66	77	78	79	67	53	52
20	1	53	67	79	80	81	68	55	54
21	1	55	68	81	82	83	69	57	56
22	1	57	69	83	84	85	70	59	58
23	1	59	70	85	86	87	71	61	60
24	1	61	71	87	88	89	72	63	62
25	1	73	90	99	100	101	91	75	74
26	1	75	91	101	102	103	92	77	76
27	1	77	92	103	104	105	93	79	78
28	1	79	93	105	106	107	94	81	80
29	1	81	94	107	108	109	95	83	82
30	1	83	95	109	110	111	96	85	84
31	1	85	96	111	112	113	97	87	86
32	1	87	97	113	114	115	98	89	88
33	1	99	116	125	126	127	117	101	100
34	1	101	117	127	128	129	118	103	102
35	1	103	118	129	130	131	119	105	104
36	1	105	119	131	132	133	120	107	106
37	1	107	120	133	134	135	121	109	108
38	1	109	121	135	136	137	122	111	110
39	1	111	122	137	138	139	123	113	112
40	1	113	123	139	140	141	124	115	114
41	1	125	142	143	148	152	151	127	126
42	1	143	144	145	149	154	153	152	148
43	1	145	146	147	150	156	155	154	149
44	1	127	151	152	157	161	160	129	128
45	1	152	153	154	158	163	162	161	157
46	1	154	155	156	159	165	164	163	158
47	1	129	160	161	166	170	169	131	130
48	1	161	162	163	167	172	171	170	166
49	1	163	164	165	168	174	173	172	167
50	1	131	169	170	175	179	178	133	132
51	1	170	171	172	176	181	180	179	175
52	1	172	173	174	177	183	182	181	176
53	1	133	178	179	184	188	187	135	134
54	1	179	180	181	185	190	189	188	184
55	1	181	182	183	186	192	191	190	185
56	1	135	187	188	193	197	196	137	136
57	1	188	189	190	194	199	198	197	193
58	1	190	191	192	195	201	200	199	194
59	1	137	196	197	202	206	205	139	138

60	1	197	198	199	203	208	207	206	202
61	1	199	200	201	204	210	209	208	203
62	1	139	205	206	211	215	214	141	140
63	1	206	207	208	212	217	216	215	211
64	1	208	209	210	213	219	218	217	212

NODAL POINT COORDINATES

NODE	X	Y
1	3.00000	0.00000
2	3.01125	0.00000
3	3.00000	0.01125
4	2.98875	0.00000
5	3.04500	0.00000
6	3.04500	0.02250
7	3.04500	0.04500
8	3.02250	0.04500
9	3.00000	0.04500
10	2.97750	0.04500
11	2.95500	0.04500
12	2.95500	0.02250
13	2.95500	0.00000
14	3.06750	0.00000
15	3.06750	0.04500
16	3.04500	0.06750
17	3.00000	0.06750
18	2.95500	0.06750
19	2.93250	0.04500
20	2.93250	0.00000
21	3.09000	0.00000
22	3.09000	0.02250
23	3.09000	0.04500
24	3.09000	0.06750
25	3.09000	0.09000
26	3.06750	0.09000
27	3.04500	0.09000
28	3.02250	0.09000
29	3.00000	0.09000
30	2.97750	0.09000
31	2.95500	0.09000
32	2.93250	0.09000
33	2.91000	0.09000
34	2.91000	0.06750
35	2.91000	0.04500
36	2.91000	0.02250
37	2.91000	0.00000
38	3.13500	0.00000
39	3.13500	0.06750
40	3.12375	0.12375
41	3.06750	0.13500
42	3.00000	0.13500
43	2.93250	0.13500

44	2.87625	0.12375
45	2.86500	0.06750
46	2.86500	0.00000
47	3.18000	0.00000
48	3.18000	0.04500
49	3.18000	0.09000
50	3.16875	0.12375
51	3.15750	0.15750
52	3.12375	0.16875
53	3.09000	0.18000
54	3.04500	0.18000
55	3.00000	0.18000
56	2.95500	0.18000
57	2.91000	0.18000
58	2.87625	0.16875
59	2.84250	0.15750
60	2.83125	0.12375
61	2.82000	0.09000
62	2.82000	0.04500
63	2.82000	0.00000
64	3.22500	0.00000
65	3.22500	0.11250
66	3.19125	0.19125
67	3.11250	0.22500
68	3.00000	0.22500
69	2.88750	0.22500
70	2.80875	0.19125
71	2.77500	0.11250
72	2.77500	0.00000
73	3.27000	0.00000
74	3.27000	0.06750
75	3.27000	0.13500
76	3.24750	0.18000
77	3.22500	0.22500
78	3.18000	0.24750
79	3.13500	0.27000
80	3.06750	0.27000
81	3.00000	0.27000
82	2.93250	0.27000
83	2.86500	0.27000
84	2.82000	0.24750
85	2.77500	0.22500
86	2.75250	0.18000
87	2.73000	0.13500
88	2.73000	0.06750
89	2.73000	0.00000
90	3.36000	0.00000
91	3.36000	0.18000
92	3.29250	0.29250
93	3.18000	0.36000
94	3.00000	0.36000
95	2.82000	0.36000

96	2.70750	0.29250
97	2.64000	0.18000
98	2.64000	0.00000
99	3.45000	0.00000
100	3.45000	0.11250
101	3.45000	0.22500
102	3.40500	0.29250
103	3.36000	0.36000
104	3.29250	0.40500
105	3.22500	0.45000
106	3.11250	0.45000
107	3.00000	0.45000
108	2.88750	0.45000
109	2.77500	0.45000
110	2.70750	0.40500
111	2.64000	0.36000
112	2.59500	0.29250
113	2.55000	0.22500
114	2.55000	0.11250
115	2.55000	0.00000
116	3.67500	0.00000
117	3.67500	0.33750
118	3.63000	0.63000
119	3.33750	0.67500
120	3.00000	0.67500
121	2.66250	0.67500
122	2.37000	0.63000
123	2.32500	0.33750
124	2.32500	0.00000
125	3.90000	0.00000
126	3.90000	0.22500
127	3.90000	0.45000
128	3.90000	0.67500
129	3.90000	0.90000
130	3.67500	0.90000
131	3.45000	0.90000
132	3.22500	0.90000
133	3.00000	0.90000
134	2.77500	0.90000
135	2.55000	0.90000
136	2.32500	0.90000
137	2.10000	0.90000
138	2.10000	0.67500
139	2.10000	0.45000
140	2.10000	0.22500
141	2.10000	0.00000
142	4.25000	0.00000
143	4.60000	0.00000
144	4.95000	0.00000
145	5.30000	0.00000
146	5.65000	0.00000
147	6.00000	0.00000

148	4.58700	0.37625
149	5.27400	0.52750
150	5.96100	0.67875
151	4.22467	0.59850
152	4.54933	0.74700
153	4.87400	0.89550
154	5.19867	1.04400
155	5.52333	1.19250
156	5.84800	1.34100
157	4.48700	1.11225
158	5.07400	1.54950
159	5.66100	1.98675
160	4.15000	1.18600
161	4.40000	1.47200
162	4.65000	1.75800
163	4.90000	2.04400
164	5.15000	2.33000
165	5.40000	2.61600
166	4.09587	1.72617
167	4.51675	2.55233
168	4.93763	3.37850
169	3.61075	1.42400
170	3.77150	1.94800
171	3.93225	2.47200
172	4.09300	2.99600
173	4.25375	3.52000
174	4.41450	4.04400
175	3.42687	2.13750
176	3.62875	3.37500
177	3.83062	4.61250
178	3.03100	1.59733
179	3.06200	2.29467
180	3.09300	2.99200
181	3.12400	3.68933
182	3.15500	4.38667
183	3.18600	5.08400
184	2.67687	2.41950
185	2.57875	3.93900
186	2.48062	5.45850
187	2.41075	1.70600
188	2.27150	2.51200
189	2.13225	3.31800
190	1.99300	4.12400
191	1.85375	4.93000
192	1.71450	5.73600
193	1.84587	2.57217
194	1.36675	4.24433
195	0.88763	5.91650
196	1.75000	1.75000
197	1.40000	2.60000
198	1.05000	3.45000
199	0.70000	4.30000

200	0.35000	5.15000
201	0.00000	6.00000
202	1.40000	1.95000
203	0.70000	3.22500
204	0.00000	4.50000
205	1.75000	0.87500
206	1.40000	1.30000
207	1.05000	1.72500
208	0.70000	2.15000
209	0.35000	2.57500
210	0.00000	3.00000
211	1.40000	0.65000
212	0.70000	1.07500
213	0.00000	1.50000
214	1.75000	0.00000
215	1.40000	0.00000
216	1.05000	0.00000
217	0.70000	0.00000
218	0.35000	0.00000
219	0.00000	0.00000

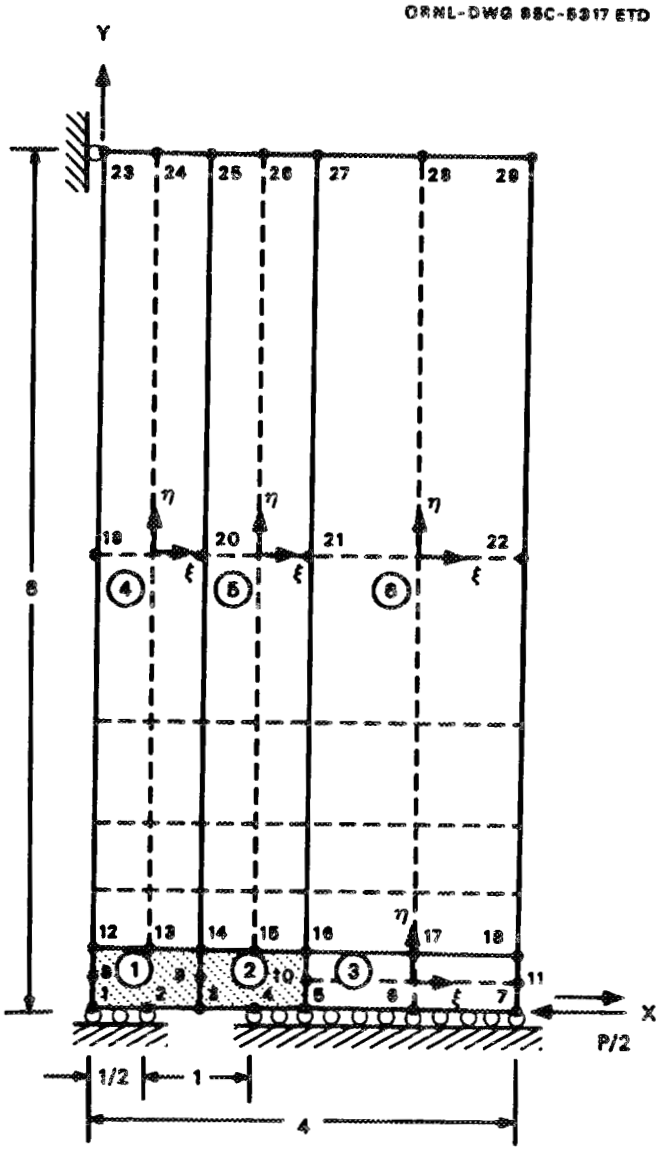

Fig. 13. Example problem 4 — beam with embedded flaw, three-point bending.

Example Problem 4. User input file FORT5

```
BEAM WITH EMBEDDED CRACK
    2   29    6    0
    1    1    1    2    3    9   14   13   12    8
    2    1    3    4    5   10   16   15   14    9
    3    1    5    6    7   11   18   17   16   10
    4    1   12   13   14   20   25   24   23   19
    5    1   14   15   16   21   27   26   25   20
    6    1   16   17   18   22   29   28   27   21
    1       0.0       0.0
    3       1.0       0.0
    5       2.0       0.0
    7       4.0       0.0
   12       0.0       0.5
   14       1.0       0.5
   16       2.0       0.5
   18       4.0       0.5
   23       0.0       8.0
   25       1.0       8.0
   27       2.0       8.0
   29       4.0       8.0
    1    1
    2    1
    3    2    2
1.0       1.0
1.0       1.0
    4    2    5
1.0       1.0
1.0       1.5       2.0       3.0       7.5
    5    2    5
1.0       1.0
1.0       1.5       2.0       3.0       7.5
    6    2    5
1.0       1.0
1.0       1.5       2.0       3.0       7.5
```

Example Problem 4. Output summary file FORT6

BEAM WITH EMBEDDED CRACK

NTIPS = 2
NPONT = 29
NBLOC = 6
NFORM = 0

DATA BLOCKS

BLOCK	MAT.	DEFINITION POINTS							
1	1	1	2	3	9	14	13	12	8
2	1	3	4	5	10	16	15	14	9
3	1	5	6	7	11	18	17	16	10
4	1	12	13	14	20	25	24	23	19
5	1	14	15	16	21	27	26	25	20
6	1	16	17	18	22	29	28	27	21

LOCATION POINTS

POINT	X	Y
1	0.0000	0.0000
2	0.5000	0.0000
3	1.0000	0.0000
4	1.5000	0.0000
5	2.0000	0.0000
6	3.0000	0.0000
7	4.0000	0.0000
8	0.0000	0.2500
9	1.0000	0.2500
10	2.0000	0.2500
11	4.0000	0.2500
12	0.0000	0.5000
13	0.5000	0.5000
14	1.0000	0.5000
15	1.5000	0.5000
16	2.0000	0.5000
17	3.0000	0.5000
18	4.0000	0.5000
19	0.0000	4.2500
20	1.0000	4.2500
21	2.0000	4.2500
22	4.0000	4.2500
23	0.0000	8.0000
24	0.5000	8.0000
25	1.0000	8.0000
26	1.5000	8.0000
27	2.0000	8.0000
28	3.0000	8.0000
29	4.0000	8.0000

DATA BLOCK NO. 1

```
-----------------

CRACK TIP BLOCK, ITYPE = 1

DATA BLOCK NO.  2
-----------------

CRACK TIP BLOCK, ITYPE = 1

DATA BLOCK NO.  3
-----------------

NO. OF DIV. IN FIRST DIRECTION =  2

NO. OF DIV. IN SECOND DIRECTION =  2

LIST OF WEIGHTING FACTORS IN FIRST DIRECTION
    1.00       1.00

LIST OF WEIGHTING FACTORS IN SECOND DIRECTION
    1.00       1.00

DATA BLOCK NO.  4
-----------------

NO. OF DIV. IN FIRST DIRECTION =  2

NO. OF DIV. IN SECOND DIRECTION =  5

LIST OF WEIGHTING FACTORS IN FIRST DIRECTION
    1.00       1.00

LIST OF WEIGHTING FACTORS IN SECOND DIRECTION
    1.00       1.50       2.00       3.00       7.50

DATA BLOCK NO.  5
-----------------

NO. OF DIV. IN FIRST DIRECTION =  2

NO. OF DIV. IN SECOND DIRECTION =  5

LIST OF WEIGHTING FACTORS IN FIRST DIRECTION
    1.00       1.00

LIST OF WEIGHTING FACTORS IN SECOND DIRECTION
    1.00       1.50       2.00       3.00       7.50

DATA BLOCK NO.  6
-----------------

NO. OF DIV. IN FIRST DIRECTION =  2
```

NO. OF DIV. IN SECOND DIRECTION = 5

LIST OF WEIGHTING FACTORS IN FIRST DIRECTION
1.00 1.00

LIST OF WEIGHTING FACTORS IN SECOND DIRECTION
1.00 1.50 2.00 3.00 7.50

**** GENERATED MESH DATA ****

NUMBER OF NODAL POINTS = 273

NUMBER OF ELEMENTS = 78

ELEMENT NODAL CONNECTIONS

ELE.	MAT.	NODAL POINTS							
1	-1	1	2	9	10	11	6	5	3
2	1	5	6	11	12	13	14	15	7
3	1	5	7	15	16	17	18	19	8
4	-1	1	3	5	8	19	20	21	4
5	1	9	22	29	30	31	23	11	10
6	1	11	23	31	32	33	24	13	12
7	1	13	24	33	34	35	25	15	14
8	1	15	25	35	36	37	26	17	16
9	1	17	26	37	38	39	27	19	18
10	1	19	27	39	40	41	28	21	20
11	1	29	42	49	50	51	43	31	30
12	1	31	43	51	52	53	44	33	32
13	1	33	44	53	54	55	45	35	34
14	1	35	45	55	56	57	46	37	36
15	1	37	46	57	58	59	47	39	38
16	1	39	47	59	60	61	48	41	40
17	1	49	62	69	70	71	63	51	50
18	1	51	63	71	72	73	64	53	52
19	1	53	64	73	74	75	65	55	54
20	1	55	65	75	76	77	66	57	56
21	1	57	66	77	78	79	67	59	58
22	1	59	67	79	80	81	68	61	60
23	-1	82	83	90	91	92	87	86	84
24	1	86	87	92	93	94	95	96	88
25	1	86	88	96	97	98	99	100	89
26	-1	82	84	86	89	100	101	102	85
27	1	90	103	110	111	112	104	92	91
28	1	92	104	112	113	114	105	94	93
29	1	94	105	114	115	116	106	96	95

30	1	96	106	116	117	118	107	98	97
31	1	98	107	118	119	120	108	100	99
32	1	100	108	120	121	122	109	102	101
33	1	110	123	130	131	132	124	112	111
34	1	112	124	132	133	134	125	114	113
35	1	114	125	134	135	136	126	116	115
36	1	116	126	136	137	138	127	118	117
37	1	118	127	138	139	140	128	120	119
38	1	120	128	140	141	142	129	122	121
39	1	130	143	150	151	152	144	132	131
40	1	132	144	152	153	154	145	134	133
41	1	134	145	154	155	156	146	136	135
42	1	136	146	156	157	73	147	138	137
43	1	138	147	73	72	71	148	140	139
44	1	140	148	71	70	69	149	142	141
45	1	150	158	159	162	165	164	152	151
46	1	159	160	161	163	167	166	165	162
47	1	152	164	165	168	171	170	154	153
48	1	165	166	167	169	173	172	171	168
49	1	77	76	75	175	179	178	177	174
50	1	75	74	73	176	181	180	179	175
51	1	177	178	179	183	187	186	185	182
52	1	179	180	181	184	189	188	187	183
53	1	185	186	187	191	195	194	193	190
54	1	187	188	189	192	197	196	195	191
55	1	193	194	195	199	203	202	201	198
56	1	195	196	197	200	205	204	203	199
57	1	201	202	203	207	211	210	209	206
58	1	203	204	205	208	213	212	211	207
59	1	73	157	156	214	217	216	181	176
60	1	156	155	154	215	219	218	217	214
61	1	181	216	217	220	223	222	189	184
62	1	217	218	219	221	225	224	223	220
63	1	189	222	223	226	229	228	197	192
64	1	223	224	225	227	231	230	229	226
65	1	197	228	229	232	235	234	205	200
66	1	229	230	231	233	237	236	235	232
67	1	205	234	235	238	241	240	213	208
68	1	235	236	237	239	243	242	241	238
69	1	154	170	171	244	247	246	219	215
70	1	171	172	173	245	249	248	247	244
71	1	219	246	247	250	253	252	225	221
72	1	247	248	249	251	255	254	253	250
73	1	225	252	253	256	259	258	231	227
74	1	253	254	255	257	261	260	259	256
75	1	231	258	259	262	265	264	237	233
76	1	259	260	261	263	267	266	265	262
77	1	237	264	265	268	271	270	243	239
78	1	265	266	267	269	273	272	271	268

NODAL POINT COORDINATES

NODE	X	Y
1	0.50000	0.00000
2	0.51250	0.00000
3	0.50000	0.01250
4	0.48750	0.00000
5	0.50000	0.05000
6	0.52500	0.05000
7	0.50000	0.07500
8	0.47500	0.05000
9	0.55000	0.00000
10	0.55000	0.02500
11	0.55000	0.05000
12	0.55000	0.07500
13	0.55000	0.10000
14	0.52500	0.10000
15	0.50000	0.10000
16	0.47500	0.10000
17	0.45000	0.10000
18	0.45000	0.07500
19	0.45000	0.05000
20	0.45000	0.02500
21	0.45000	0.00000
22	0.58750	0.00000
23	0.58750	0.06250
24	0.56250	0.13750
25	0.50000	0.13750
26	0.43750	0.13750
27	0.41250	0.06250
28	0.41250	0.00000
29	0.62500	0.00000
30	0.62500	0.03750
31	0.62500	0.07500
32	0.60000	0.12500
33	0.57500	0.17500
34	0.53750	0.17500
35	0.50000	0.17500
36	0.46250	0.17500
37	0.42500	0.17500
38	0.40000	0.12500
39	0.37500	0.07500
40	0.37500	0.03750
41	0.37500	0.00000
42	0.67500	0.00000
43	0.67500	0.10000
44	0.61250	0.22500
45	0.50000	0.22500
46	0.38750	0.22500
47	0.32500	0.10000
48	0.32500	0.00000
49	0.72500	0.00000
50	0.72500	0.06250
51	0.72500	0.12500

52	0.68750	0.20000
53	0.65000	0.27500
54	0.57500	0.27500
55	0.50000	0.27500
56	0.42500	0.27500
57	0.35000	0.27500
58	0.31250	0.20000
59	0.27500	0.12500
60	0.27500	0.06250
61	0.27500	0.00000
62	0.86250	0.00000
63	0.86250	0.18750
64	0.82500	0.38750
65	0.50000	0.38750
66	0.17500	0.38750
67	0.13750	0.18750
68	0.13750	0.00000
69	1.00000	0.00000
70	1.00000	0.12500
71	1.00000	0.25000
72	1.00000	0.37500
73	1.00000	0.50000
74	0.75000	0.50000
75	0.50000	0.50000
76	0.25000	0.50000
77	0.00000	0.50000
78	0.00000	0.37500
79	0.00000	0.25000
80	0.00000	0.12500
81	0.00000	0.00000
82	1.50000	0.00000
83	1.51250	0.00000
84	1.50000	0.01250
85	1.48750	0.00000
86	1.50000	0.05000
87	1.52500	0.05000
88	1.50000	0.07500
89	1.47500	0.05000
90	1.55000	0.00000
91	1.55000	0.02500
92	1.55000	0.05000
93	1.55000	0.07500
94	1.55000	0.10000
95	1.52500	0.10000
96	1.50000	0.10000
97	1.47500	0.10000
98	1.45000	0.10000
99	1.45000	0.07500
100	1.45000	0.05000
101	1.45000	0.02500
102	1.45000	0.00000
103	1.58750	0.00000

104	1.58750	0.06250
105	1.56250	0.13750
106	1.50000	0.13750
107	1.43750	0.13750
108	1.41250	0.06250
109	1.41250	0.00000
110	1.62500	0.00000
111	1.62500	0.03750
112	1.62500	0.07500
113	1.60000	0.12500
114	1.57500	0.17500
115	1.53750	0.17500
116	1.50000	0.17500
117	1.46250	0.17500
118	1.42500	0.17500
119	1.40000	0.12500
120	1.37500	0.07500
121	1.37500	0.03750
122	1.37500	0.00000
123	1.67500	0.00000
124	1.67500	0.10000
125	1.61250	0.22500
126	1.50000	0.22500
127	1.38750	0.22500
128	1.32500	0.10000
129	1.32500	0.00000
130	1.72500	0.00000
131	1.72500	0.06250
132	1.72500	0.12500
133	1.68750	0.20000
134	1.65000	0.27500
135	1.57500	0.27500
136	1.50000	0.27500
137	1.42500	0.27500
138	1.35000	0.27500
139	1.31250	0.20000
140	1.27500	0.12500
141	1.27500	0.06250
142	1.27500	0.00000
143	1.86250	0.00000
144	1.86250	0.18750
145	1.82500	0.38750
146	1.50000	0.38750
147	1.17500	0.38750
148	1.13750	0.18750
149	1.13750	0.00000
150	2.00000	0.00000
151	2.00000	0.12500
152	2.00000	0.25000
153	2.00000	0.37500
154	2.00000	0.50000
155	1.75000	0.50000

156	1.50000	0.50000
157	1.25000	0.50000
158	2.50000	0.00000
159	3.00000	0.00000
160	3.50000	0.00000
161	4.00000	0.00000
162	3.00000	0.12500
163	4.00000	0.12500
164	2.50000	0.25000
165	3.00000	0.25000
166	3.50000	0.25000
167	4.00000	0.25000
168	3.00000	0.37500
169	4.00000	0.37500
170	2.50000	0.50000
171	3.00000	0.50000
172	3.50000	0.50000
173	4.00000	0.50000
174	0.00000	0.75000
175	0.50000	0.75000
176	1.00000	0.75000
177	0.00000	1.00000
178	0.25000	1.00000
179	0.50000	1.00000
180	0.75000	1.00000
181	1.00000	1.00000
182	0.00000	1.37500
183	0.50000	1.37500
184	1.00000	1.37500
185	0.00000	1.75000
186	0.25000	1.75000
187	0.50000	1.75000
188	0.75000	1.75000
189	1.00000	1.75000
190	0.00000	2.25000
191	0.50000	2.25000
192	1.00000	2.25000
193	0.00000	2.75000
194	0.25000	2.75000
195	0.50000	2.75000
196	0.75000	2.75000
197	1.00000	2.75000
198	0.00000	3.50000
199	0.50000	3.50000
200	1.00000	3.50000
201	0.00000	4.25000
202	0.25000	4.25000
203	0.50000	4.25000
204	0.75000	4.25000
205	1.00000	4.25000
206	0.00000	6.12500
207	0.50000	6.12500

208	1.00000	6.12500
209	0.00000	8.00000
210	0.25000	8.00000
211	0.50000	8.00000
212	0.75000	8.00000
213	1.00000	8.00000
214	1.50000	0.75000
215	2.00000	0.75000
216	1.25000	1.00000
217	1.50000	1.00000
218	1.75000	1.00000
219	2.00000	1.00000
220	1.50000	1.37500
221	2.00000	1.37500
222	1.25000	1.75000
223	1.50000	1.75000
224	1.75000	1.75000
225	2.00000	1.75000
226	1.50000	2.25000
227	2.00000	2.25000
228	1.25000	2.75000
229	1.50000	2.75000
230	1.75000	2.75000
231	2.00000	2.75000
232	1.50000	3.50000
233	2.00000	3.50000
234	1.25000	4.25000
235	1.50000	4.25000
236	1.75000	4.25000
237	2.00000	4.25000
238	1.50000	6.12500
239	2.00000	6.12500
240	1.25000	8.00000
241	1.50000	8.00000
242	1.75000	8.00000
243	2.00000	8.00000
244	3.00000	0.75000
245	4.00000	0.75000
246	2.50000	1.00000
247	3.00000	1.00000
248	3.50000	1.00000
249	4.00000	1.00000
250	3.00000	1.37500
251	4.00000	1.37500
252	2.50000	1.75000
253	3.00000	1.75000
254	3.50000	1.75000
255	4.00000	1.75000
256	3.00000	2.25000
257	4.00000	2.25000
258	2.50000	2.75000
259	3.00000	2.75000

260	3.50000	2.75000
261	4.00000	2.75000
262	3.00000	3.50000
263	4.00000	3.50000
264	2.50000	4.25000
265	3.00000	4.25000
266	3.50000	4.25000
267	4.00000	4.25000
268	3.00000	6.12500
269	4.00000	6.12500
270	2.50000	8.00000
271	3.00000	8.00000
272	3.50000	8.00000
273	4.00000	8.00000

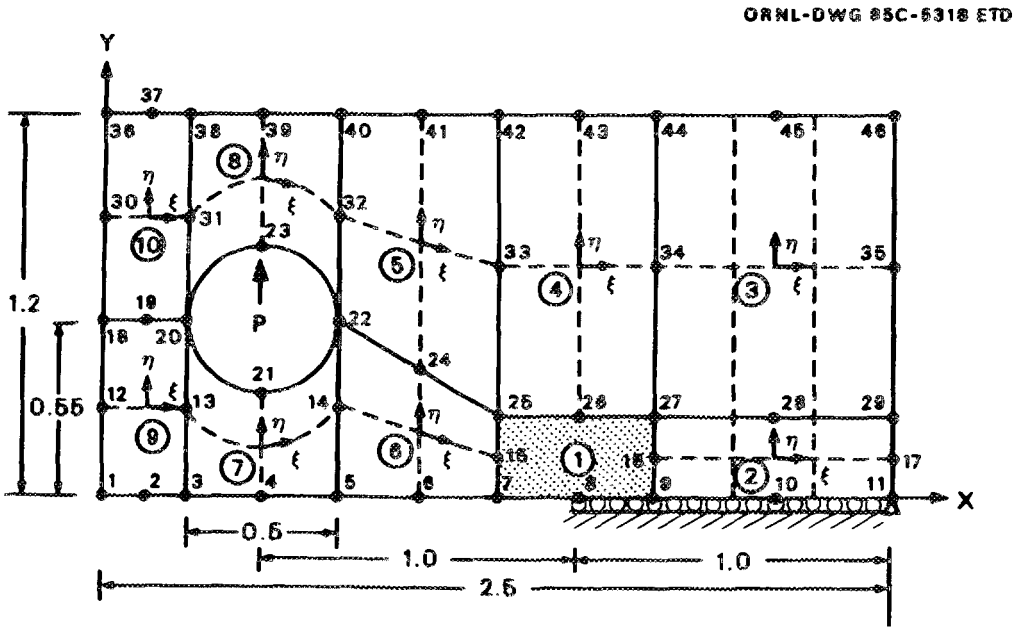

Fig. 14. Example problem 5 — compact tension specimen.

Example Problem 5. User input file FORT5

```
STANDARD COMPACT TENSION SPECIMEN
    1   46   10    0
    1    1    7    8    9   16   27   26   25   15
    2    1    9   10   11   17   29   28   27   16
    3    1   27   28   29   35   46   45   44   34
    4    1   25   26   27   34   44   43   42   33
    5    1   22   24   25   33   42   41   40   32
    6    1    5    6    7   15   25   24   22   14
    7    1    3    4    5   14   22   21   20   13
    8    1   20   23   22   32   40   39   38   31
    9    1    1    2    3   13   20   19   18   12
   10    1   18   19   20   31   38   37   36   30
    1       0.0       0.0
    3      0.25       0.0
    5      0.75       0.0
    7      1.25       0.0
    9      1.75       0.0
   11       2.5       0.0
   18       0.0      0.55
   20      0.25      0.55
   21       0.5       0.3
   22      0.75      0.55
   23       0.5       0.8
   25      1.25      0.25
   27      1.75      0.25
   29       2.5      0.25
   36       0.0       1.2
   38      0.25       1.2
   40      0.75       1.2
   42      1.25       1.2
   44      1.75       1.2
   46       2.5       1.2
    1    1
    2    3    2
1.0       1.0       1.0
1.0       1.0
    3    3    2
1.0       1.0       1.0
1.0       1.0
    4    2    2
1.0       1.0
1.0       1.0
    5    2    2
1.0       1.0
1.0       1.0
    6    2    2
1.0       1.0
1.0       1.0
    7    2    2
```

```
1.0         1.0
1.0         1.0
    8     2     2
1.0         1.0
1.0         1.0
    9     1     2
1.0
1.0         1.0
   10     1     2
1.0
1.0         1.0
```

Example Problem 5. Output summary file FORT6

STANDARD COMPACT TENSION SPECIMEN

NTIPS = 1
NPONT = 46
NBLOC = 10
NFORM = 0

DATA BLOCKS

BLOCK	MAT.	DEFINITION POINTS							
1	1	7	8	9	16	27	26	25	15
2	1	9	10	11	17	29	28	27	16
3	1	27	28	29	35	46	45	44	34
4	1	25	26	27	34	44	43	42	33
5	1	22	24	25	33	42	41	40	32
6	1	5	6	7	15	25	24	22	14
7	1	3	4	5	14	22	21	20	13
8	1	20	23	22	32	40	39	38	31
9	1	1	2	3	13	20	19	18	12
10	1	18	19	20	31	38	37	36	30

LOCATION POINTS

POINT	X	Y
1	0.0000	0.0000
2	0.1250	0.0000
3	0.2500	0.0000
4	0.5000	0.0000
5	0.7500	0.0000
6	1.0000	0.0000
7	1.2500	0.0000
8	1.5000	0.0000
9	1.7500	0.0000
10	2.1250	0.0000
11	2.5000	0.0000
12	0.0000	0.2750
13	0.2500	0.2750
14	0.7500	0.2750
15	1.2500	0.1250
16	1.7500	0.1250
17	2.5000	0.1250
18	0.0000	0.5500
19	0.1250	0.5500
20	0.2500	0.5500
21	0.5000	0.3000
22	0.7500	0.5500
23	0.5000	0.8000
24	1.0000	0.4000
25	1.2500	0.2500
26	1.5000	0.2500
27	1.7500	0.2500

28	2.1250	0.2500
29	2.5000	0.2500
30	0.0000	0.8750
31	0.2500	0.8750
32	0.7500	0.8750
33	1.2500	0.7250
34	1.7500	0.7250
35	2.5000	0.7250
36	0.0000	1.2000
37	0.1250	1.2000
38	0.2500	1.2000
39	0.5000	1.2000
40	0.7500	1.2000
41	1.0000	1.2000
42	1.2500	1.2000
43	1.5000	1.2000
44	1.7500	1.2000
45	2.1250	1.2000
46	2.5000	1.2000

DATA BLOCK NO. 1

CRACK TIP BLOCK, ITYPE = 1

DATA BLOCK NO. 2

NO. OF DIV. IN FIRST DIRECTION = 3

NO. OF DIV. IN SECOND DIRECTION = 2

LIST OF WEIGHTING FACTORS IN FIRST DIRECTION
1.00 1.00 1.00

LIST OF WEIGHTING FACTORS IN SECOND DIRECTION
1.00 1.00

DATA BLOCK NO. 3

NO. OF DIV. IN FIRST DIRECTION = 3

NO. OF DIV. IN SECOND DIRECTION = 2

LIST OF WEIGHTING FACTORS IN FIRST DIRECTION
1.00 1.00 1.00

LIST OF WEIGHTING FACTORS IN SECOND DIRECTION
1.00 1.00

DATA BLOCK NO. 4

```
-----------------

NO. OF DIV. IN FIRST DIRECTION =  2

NO. OF DIV. IN SECOND DIRECTION =  2

LIST OF WEIGHTING FACTORS IN FIRST DIRECTION
    1.00       1.00

LIST OF WEIGHTING FACTORS IN SECOND DIRECTION
    1.00       1.00

DATA BLOCK NO.  5
-----------------

NO. OF DIV. IN FIRST DIRECTION =  2

NO. OF DIV. IN SECOND DIRECTION =  2

LIST OF WEIGHTING FACTORS IN FIRST DIRECTION
    1.00       1.00

LIST OF WEIGHTING FACTORS IN SECOND DIRECTION
    1.00       1.00

DATA BLOCK NO.  6
-----------------

NO. OF DIV. IN FIRST DIRECTION =  2

NO. OF DIV. IN SECOND DIRECTION =  2

LIST OF WEIGHTING FACTORS IN FIRST DIRECTION
    1.00       1.00

LIST OF WEIGHTING FACTORS IN SECOND DIRECTION
    1.00       1.00

DATA BLOCK NO.  7
-----------------

NO. OF DIV. IN FIRST DIRECTION =  2

NO. OF DIV. IN SECOND DIRECTION =  2

LIST OF WEIGHTING FACTORS IN FIRST DIRECTION
    1.00       1.00

LIST OF WEIGHTING FACTORS IN SECOND DIRECTION
    1.00       1.00

DATA BLOCK NO.  8
```

```
-----------------

NO. OF DIV. IN FIRST DIRECTION =  2

NO. OF DIV. IN SECOND DIRECTION =  2

LIST OF WEIGHTING FACTORS IN FIRST DIRECTION
    1.00       1.00

LIST OF WEIGHTING FACTORS IN SECOND DIRECTION
    1.00       1.00

DATA BLOCK NO.  9
-----------------

NO. OF DIV. IN FIRST DIRECTION =  1

NO. OF DIV. IN SECOND DIRECTION =  2

LIST OF WEIGHTING FACTORS IN FIRST DIRECTION
    1.00

LIST OF WEIGHTING FACTORS IN SECOND DIRECTION
    1.00       1.00

DATA BLOCK NO. 10
-----------------

NO. OF DIV. IN FIRST DIRECTION =  1

NO. OF DIV. IN SECOND DIRECTION =  2

LIST OF WEIGHTING FACTORS IN FIRST DIRECTION
    1.00

LIST OF WEIGHTING FACTORS IN SECOND DIRECTION
    1.00       1.00



**** GENERATED MESH DATA ****


NUMBER OF NODAL POINTS = 212

NUMBER OF ELEMENTS =  58

ELEMENT NODAL CONNECTIONS

ELE.  MAT.              NODAL POINTS
```

1	-1	1	2	9	10	11	6	5	3
2	1	5	6	11	12	13	14	15	7
3	1	5	7	15	16	17	18	19	8
4	-1	1	3	5	8	19	20	21	4
5	1	9	22	29	30	31	23	11	10
6	1	11	23	31	32	33	24	13	12
7	1	13	24	33	34	35	25	15	14
8	1	15	25	35	36	37	26	17	16
9	1	17	26	37	38	39	27	19	18
10	1	19	27	39	40	41	28	21	20
11	1	29	42	49	50	51	43	31	30
12	1	31	43	51	52	53	44	33	32
13	1	33	44	53	54	55	45	35	34
14	1	35	45	55	56	57	46	37	36
15	1	37	46	57	58	59	47	39	38
16	1	39	47	59	60	61	48	41	40
17	1	49	62	69	70	71	63	51	50
18	1	51	63	71	72	73	64	53	52
19	1	53	64	73	74	75	65	55	54
20	1	55	65	75	76	77	66	57	56
21	1	57	66	77	78	79	67	59	58
22	1	59	67	79	80	81	68	61	60
23	1	69	82	83	88	92	91	71	70
24	1	83	84	85	89	94	93	92	88
25	1	85	86	87	90	96	95	94	89
26	1	71	91	92	97	101	100	73	72
27	1	92	93	94	98	103	102	101	97
28	1	94	95	96	99	105	104	103	98
29	1	73	100	101	107	112	111	110	106
30	1	101	102	103	108	114	113	112	107
31	1	103	104	105	109	116	115	114	108
32	1	110	111	112	118	123	122	121	117
33	1	112	113	114	119	125	124	123	118
34	1	114	115	116	120	127	126	125	119
35	1	77	76	75	129	132	131	130	128
36	1	75	74	73	106	110	133	132	129
37	1	130	131	132	135	138	137	136	134
38	1	132	133	110	117	121	139	138	135
39	1	140	141	142	145	148	147	146	144
40	1	142	143	77	128	130	149	148	145
41	1	146	147	148	151	154	153	152	150
42	1	148	149	130	134	136	155	154	151
43	1	156	157	158	161	164	163	162	160
44	1	158	159	81	80	79	165	164	161
45	1	162	163	164	167	142	141	140	166
46	1	164	165	79	78	77	143	142	167
47	1	168	169	170	173	176	175	174	172
48	1	170	171	156	160	162	177	176	173
49	1	174	175	176	179	182	181	180	178
50	1	176	177	162	166	140	183	182	179
51	1	180	184	185	188	191	190	189	187
52	1	185	186	140	144	146	192	191	188

53	1	189	190	191	194	197	196	195	193
54	1	191	192	146	150	152	198	197	194
55	1	199	200	168	172	174	203	202	201
56	1	202	203	174	178	180	206	205	204
57	1	205	206	180	187	189	209	208	207
58	1	208	209	189	193	195	212	211	210

NODAL POINT COORDINATES

NODE	X	Y
1	1.50000	0.00000
2	1.50625	0.00000
3	1.50000	0.00625
4	1.49375	0.00000
5	1.50000	0.02500
6	1.51250	0.02500
7	1.50000	0.03750
8	1.48750	0.02500
9	1.52500	0.00000
10	1.52500	0.01250
11	1.52500	0.02500
12	1.52500	0.03750
13	1.52500	0.05000
14	1.51250	0.05000
15	1.50000	0.05000
16	1.48750	0.05000
17	1.47500	0.05000
18	1.47500	0.03750
19	1.47500	0.02500
20	1.47500	0.01250
21	1.47500	0.00000
22	1.54375	0.00000
23	1.54375	0.03125
24	1.53125	0.06875
25	1.50000	0.06875
26	1.46875	0.06875
27	1.45625	0.03125
28	1.45625	0.00000
29	1.56250	0.00000
30	1.56250	0.01875
31	1.56250	0.03750
32	1.55000	0.06250
33	1.53750	0.08750
34	1.51875	0.08750
35	1.50000	0.08750
36	1.48125	0.08750
37	1.46250	0.08750
38	1.45000	0.06250
39	1.43750	0.03750
40	1.43750	0.01875
41	1.43750	0.00000
42	1.58750	0.00000

43	1.58750	0.05000
44	1.55625	0.11250
45	1.50000	0.11250
46	1.44375	0.11250
47	1.41250	0.05000
48	1.41250	0.00000
49	1.61250	0.00000
50	1.61250	0.03125
51	1.61250	0.06250
52	1.59375	0.10000
53	1.57500	0.13750
54	1.53750	0.13750
55	1.50000	0.13750
56	1.46250	0.13750
57	1.42500	0.13750
58	1.40625	0.10000
59	1.38750	0.06250
60	1.38750	0.03125
61	1.38750	0.00000
62	1.68125	0.00000
63	1.68125	0.09375
64	1.66250	0.19375
65	1.50000	0.19375
66	1.33750	0.19375
67	1.31875	0.09375
68	1.31875	0.00000
69	1.75000	0.00000
70	1.75000	0.06250
71	1.75000	0.12500
72	1.75000	0.18750
73	1.75000	0.25000
74	1.62500	0.25000
75	1.50000	0.25000
76	1.37500	0.25000
77	1.25000	0.25000
78	1.25000	0.18750
79	1.25000	0.12500
80	1.25000	0.06250
81	1.25000	0.00000
82	1.87500	0.00000
83	2.00000	0.00000
84	2.12500	0.00000
85	2.25000	0.00000
86	2.37500	0.00000
87	2.50000	0.00000
88	2.00000	0.06250
89	2.25000	0.06250
90	2.50000	0.06250
91	1.87500	0.12500
92	2.00000	0.12500
93	2.12500	0.12500
94	2.25000	0.12500

95	2.37500	0.12500
96	2.50000	0.12500
97	2.00000	0.18750
98	2.25000	0.18750
99	2.50000	0.18750
100	1.87500	0.25000
101	2.00000	0.25000
102	2.12500	0.25000
103	2.25000	0.25000
104	2.37500	0.25000
105	2.50000	0.25000
106	1.75000	0.48750
107	2.00000	0.48750
108	2.25000	0.48750
109	2.50000	0.48750
110	1.75000	0.72500
111	1.87500	0.72500
112	2.00000	0.72500
113	2.12500	0.72500
114	2.25000	0.72500
115	2.37500	0.72500
116	2.50000	0.72500
117	1.75000	0.96250
118	2.00000	0.96250
119	2.25000	0.96250
120	2.50000	0.96250
121	1.75000	1.20000
122	1.87500	1.20000
123	2.00000	1.20000
124	2.12500	1.20000
125	2.25000	1.20000
126	2.37500	1.20000
127	2.50000	1.20000
128	1.25000	0.48750
129	1.50000	0.48750
130	1.25000	0.72500
131	1.37500	0.72500
132	1.50000	0.72500
133	1.62500	0.72500
134	1.25000	0.96250
135	1.50000	0.96250
136	1.25000	1.20000
137	1.37500	1.20000
138	1.50000	1.20000
139	1.62500	1.20000
140	0.75000	0.55000
141	0.87500	0.47500
142	1.00000	0.40000
143	1.12500	0.32500
144	0.75000	0.71250
145	1.00000	0.60000
146	0.75000	0.87500

147	0.87500	0.83750
148	1.00000	0.80000
149	1.12500	0.76250
150	0.75000	1.03750
151	1.00000	1.00000
152	0.75000	1.20000
153	0.87500	1.20000
154	1.00000	1.20000
155	1.12500	1.20000
156	0.75000	0.00000
157	0.87500	0.00000
158	1.00000	0.00000
159	1.12500	0.00000
160	0.75000	0.13750
161	1.00000	0.10000
162	0.75000	0.27500
163	0.87500	0.23750
164	1.00000	0.20000
165	1.12500	0.16250
166	0.75000	0.41250
167	1.00000	0.30000
168	0.25000	0.00000
169	0.37500	0.00000
170	0.50000	0.00000
171	0.62500	0.00000
172	0.25000	0.13750
173	0.50000	0.07500
174	0.25000	0.27500
175	0.37500	0.18125
176	0.50000	0.15000
177	0.62500	0.18125
178	0.25000	0.41250
179	0.50000	0.22500
180	0.25000	0.55000
181	0.37500	0.36250
182	0.50000	0.30000
183	0.62500	0.36250
184	0.37500	0.73750
185	0.50000	0.80000
186	0.62500	0.73750
187	0.25000	0.71250
188	0.50000	0.90000
189	0.25000	0.87500
190	0.37500	0.96875
191	0.50000	1.00000
192	0.62500	0.96875
193	0.25000	1.03750
194	0.50000	1.10000
195	0.25000	1.20000
196	0.37500	1.20000
197	0.50000	1.20000
198	0.62500	1.20000

199	0.00000	0.00000
200	0.12500	0.00000
201	0.00000	0.13750
202	0.00000	0.27500
203	0.12500	0.27500
204	0.00000	0.41250
205	0.00000	0.55000
206	0.12500	0.55000
207	0.00000	0.71250
208	0.00000	0.87500
209	0.12500	0.87500
210	0.00000	1.03750
211	0.00000	1.20000
212	0.12500	1.20000

Appendix C

CRACK-TIP BLOCK SUBDIVISION

Reference Figs. 15—20 showing the subdivisions of each type of crack-tip block that may be employed in ORMGEN.PC are provided here. These figures are helpful for specifying boundary conditions and for determining elements that occupy the crack-tip zone.

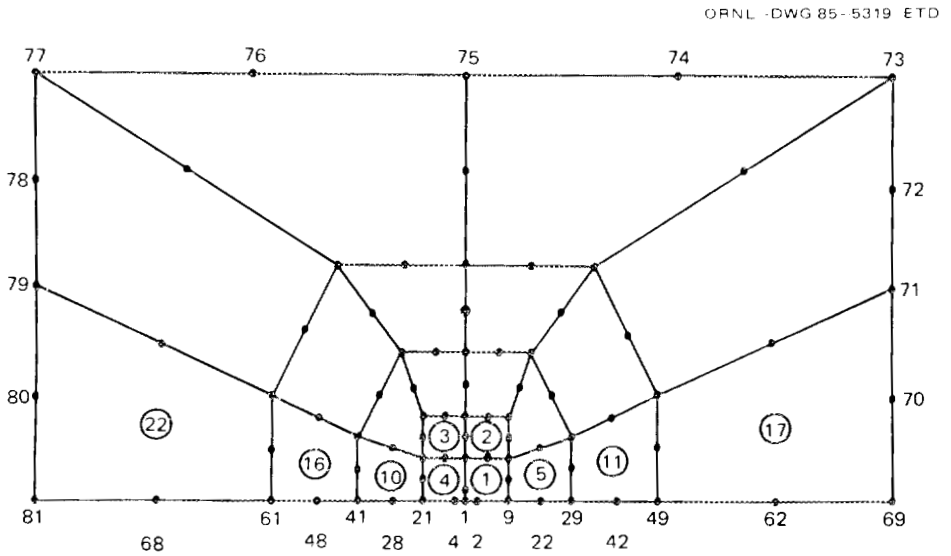

Fig. 15. Element and node numbering for ORVIRT.PC compatible crack-tip block, ITYPE=1.

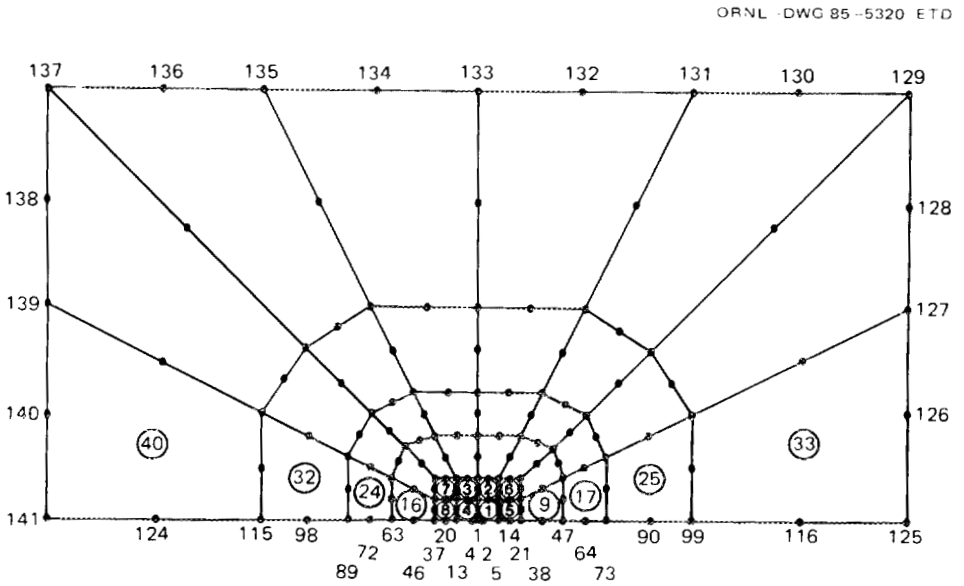

Fig. 16. Element and node numbering for ORVIRT.PC compatible crack-tip block, ITYPE=2.

ORNL-DWG 85-5321 ETD

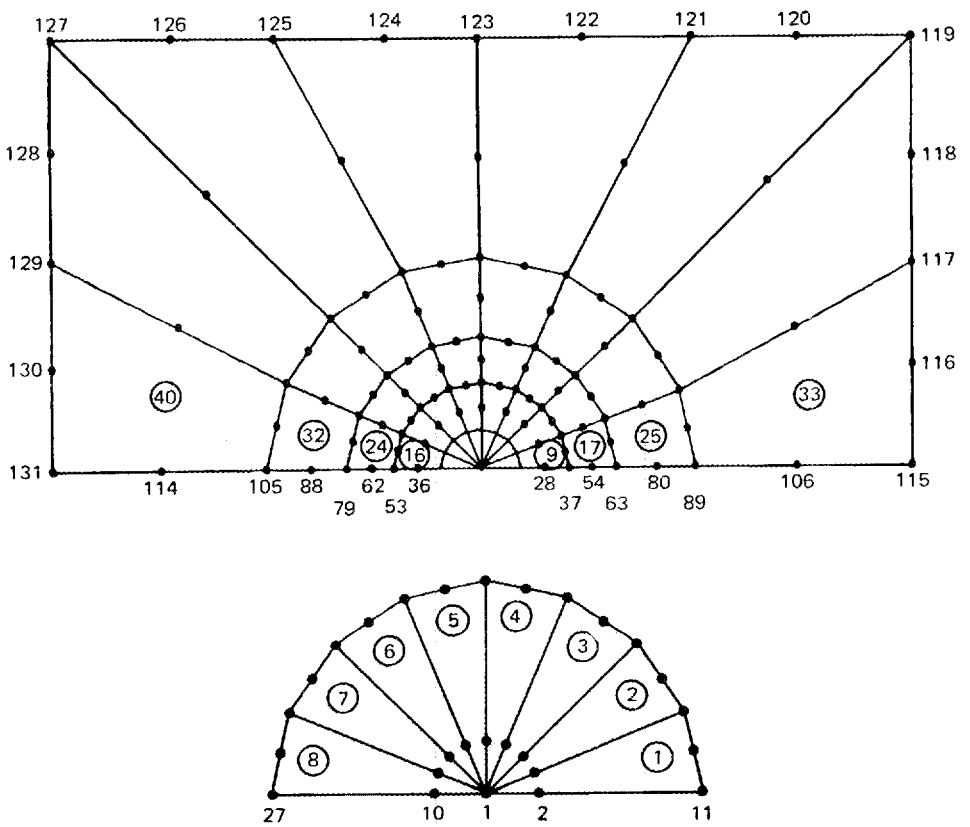

Fig. 17. Element and node numbering for ADINA/ORVIRT compatible crack-tip block, ITYPE=3, IKIND=0.

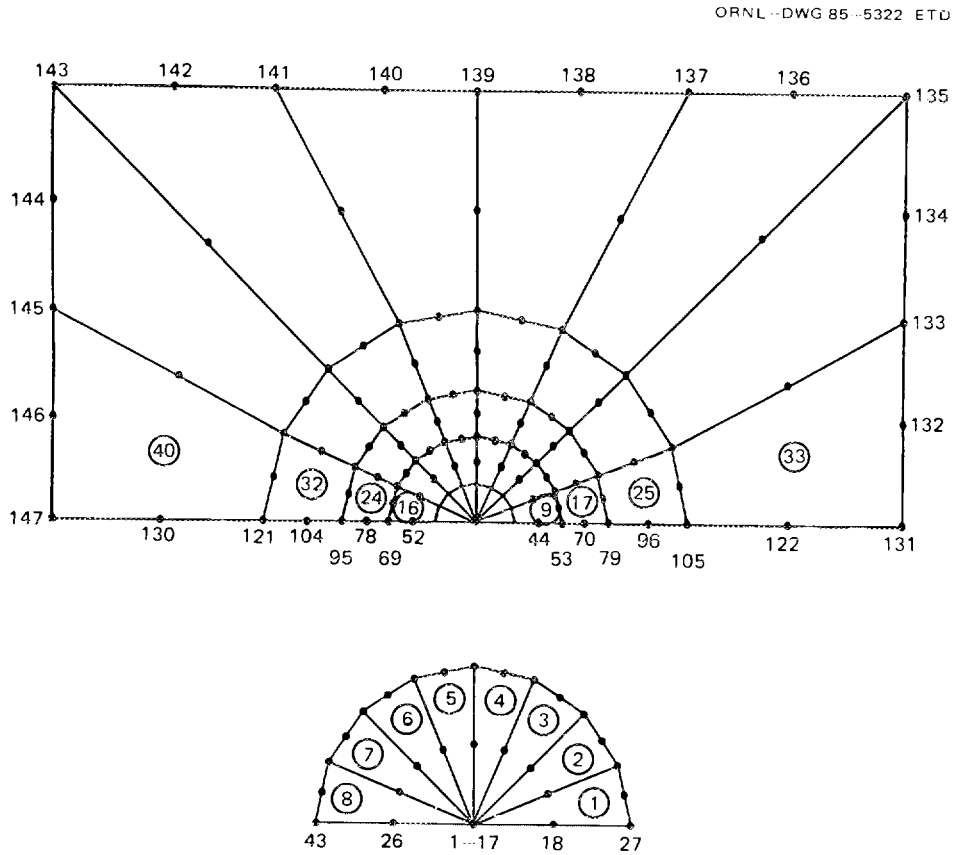

Fig. 18. Element and node numbering for ADINA/ORVIRT compatible crack-tip block, ITYPE=3, IKIND=1.

ORNL-DWG 85-5323 ETD

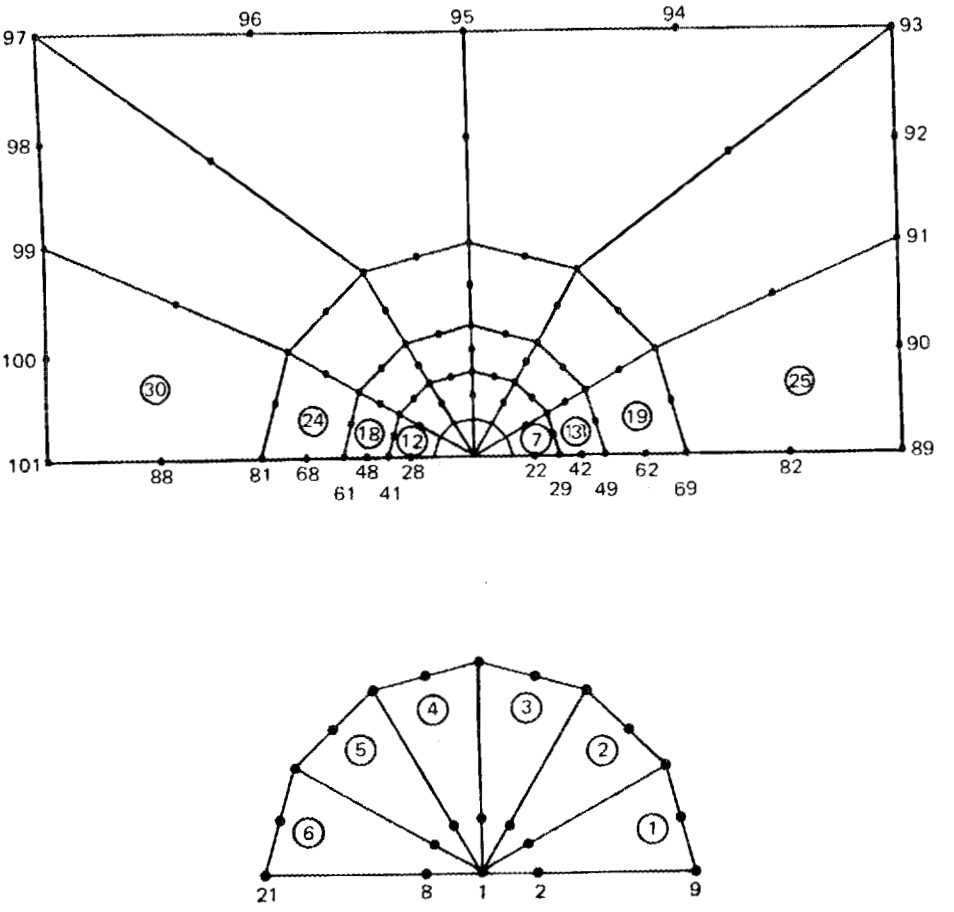

Fig. 19. Element and node numbering for ADINA/ORVIRT compatible crack-tip block, ITYPE=4, IKIND=0.

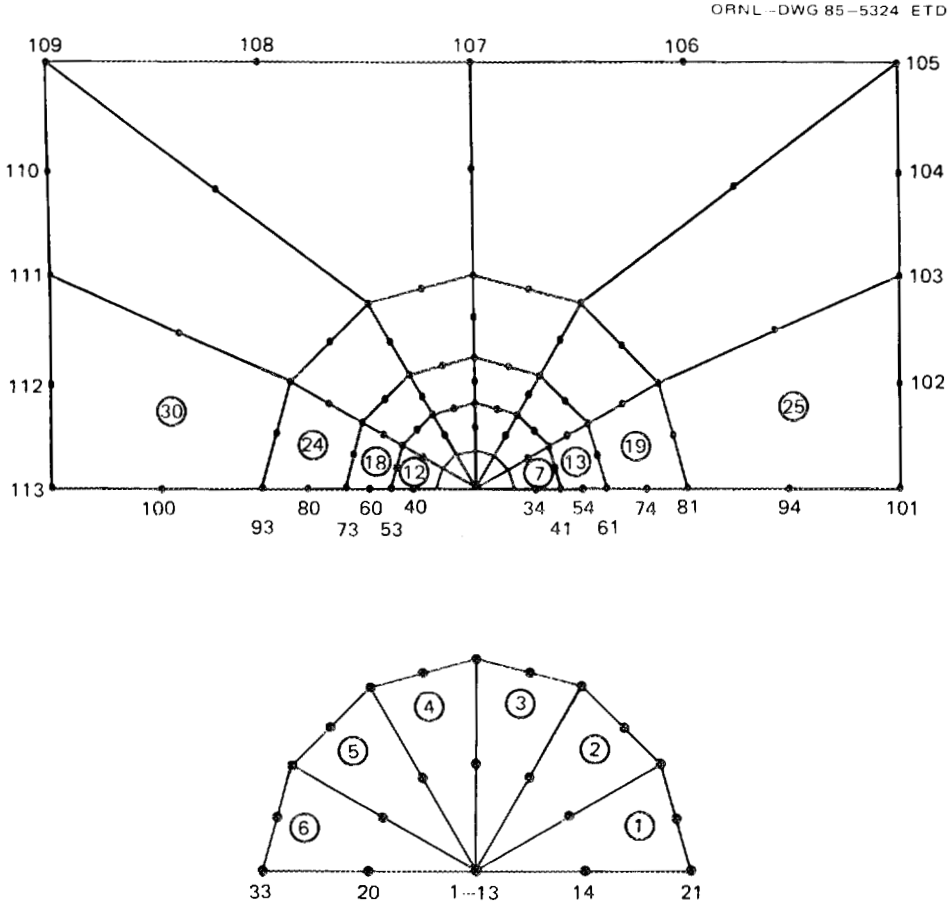

Fig. 20. Element and node numbering for ADINA/ORVIRT compatible crack-tip block, ITYPE=4, IKIND=1.

NUREG/CR-4475
ORNL-6250
Dist. Category RF

Internal Distribution

1. D. G. Ball
2-4. B. R. Bass
5. R. H. Bryan
6-10. J. W. Bryson
11. S. J. Chang
12. R. D. Cheverton
13. J. A. Clinard
14. J. M. Corum
15. W. R. Corwin
16. D. M. Eissenberg
17. J. A. Getsi
18. R. C. Gwaltney
19. S. K. Iskander
20. A. P. Malinauskas
21. J. J. McGowan
22. J. G. Merkle
23. R. K. Nanstad
24. D. J. Naus
25-27. C. E. Pugh
28. G. C. Robinson
29. W. K. Sartory
30. D. A. Steinert
31. H. E. Trammell
32-33. G. D. Whitman
34. G. T. Yahr
35. ORNL Patent Office
36. Central Research Library
37. Document Reference Section
38-39. Laboratory Records Department
40. Laboratory Records (RC)

External Distribution

41. C. Z. Serpan, Division of Engineering Technology, Nuclear Regulatory Commission, Washington, DC 20555
42. M. Vagins, Division of Engineering Technology, Nuclear Regulatory Commission, Washington, DC 20555
43. R. A. Fields, Fracture and Deformation Division, National Bureau of Standards, Gaithersburg, MD 20899
44. W. L. Fourney, Department of Mechanical Engineering, University of Maryland, College Park, MD 20742
45. C. E. Schwartz, Department of Civil Engineering, University of Maryland, College Park, MD 20742
46. M. F. Kanninen, Engineering and Material Science Division, Southwest Research Institute, San Antonio, TX 78284
47. Office of Assistant Manager for Energy Research and Development, DOE, ORO, Oak Ridge, TN 37831
48-49. Technical Information Center, DOE, Oak Ridge, TN 37831
50-324. Given distribution as shown in category RF (NTIS-10)

NRC FORM 335 (2-84) NRCM 1102 3201 3202

U.S. NUCLEAR REGULATORY COMMISSION

BIBLIOGRAPHIC DATA SHEET

SEE INSTRUCTIONS ON THE REVERSE

1. REPORT NUMBER (Assigned by TIDC, add Vol. No., if any)

NUREG/CR-4475
ORNL-6250

2. TITLE AND SUBTITLE

ORMGEN.PC: A Microcomputer Program for Automatic Mesh Generation of 2-D Crack Geometries

3. LEAVE BLANK

4. DATE REPORT COMPLETED

MONTH	YEAR
January	1986

5. AUTHOR(S)

J. W. Bryson and B. R. Bass*

6. DATE REPORT ISSUED

MONTH	YEAR
February	1986

7. PERFORMING ORGANIZATION NAME AND MAILING ADDRESS (Include Zip Code)

Oak Ridge National Laboratory
P.O. Box X
Oak Ridge, Tennessee 37831

8. PROJECT/TASK/WORK UNIT NUMBER

9. FIN OR GRANT NUMBER

B0119

10. SPONSORING ORGANIZATION NAME AND MAILING ADDRESS (Include Zip Code)

Division of Engineering Technology
Office of Nuclear Regulatory Research
U.S. Nuclear Regulatory Commission
Washington, DC 20555

11a. TYPE OF REPORT

b. PERIOD COVERED (Inclusive dates)

12. SUPPLEMENTARY NOTES

13. ABSTRACT (200 words or less)

ORMGEN.PC (Oak Ridge Mesh GENeration. Personal Computer) automatically generates two-dimensional finite-element models for either cracked or uncracked structures. Element connectivities and nodal point coordinates are written in formats that are compatible for subsequent fracture analysis using either the ORVIRT.PC finite-element microcomputer program or the ADINA/ORVIRT mainframe system. ORMGEN.PC emphasizes generality in its design. Finite-element models can be generated for disks, plates, cylinders, and even geometries with holes, such as compact tension specimens. Either surface or embedded flaw geometries can be modeled. Detail user instructions describe both preparation of input data and program operation. Sample problems are presented that demonstrate the flexibility of the program. ORMGEN.PC executes on an IBM PC/AT or PC/XT microcomputer; typical runtimes on an IBM PC/AT are 30 to 45 s.

14. DOCUMENT ANALYSIS - a. KEYWORDS/DESCRIPTORS

Finite-element analysis
Fracture mechanics
Microcomputer software
Stress analysis

b. IDENTIFIERS/OPEN-ENDED TERMS

15. AVAILABILITY STATEMENT

Unlimited

16. SECURITY CLASSIFICATION

(This page)
Unclassified

(This report)
Unclassified

17. NUMBER OF PAGES

18. PRICE

*Computing and Telecommunications Division