MARTIN MARIETTA ENERGY SYSTEMS LIBRARIES

3 4456 0167513 8

ORNL/TM-9927

ornl

OAK RIDGE NATIONAL LABORATORY

MARTIN MARIETTA

Thicknesses, Densities, and Calculated Thermal Resistances for Loose-Fill Rock Wool Installed in Two Attic Sections of a Manufactured House

R. S. Graves
D. W. Yarbrough

OAK RIDGE NATIONAL LABORATORY
CENTRAL RESEARCH LIBRARY
CIRCULATION SECTION
4500N ROOM 175
LIBRARY LOAN COPY
DO NOT TRANSFER TO ANOTHER PERSON
If you wish someone else to see this report, send in name with report and the library will arrange a loan.

OPERATED BY
MARTIN MARIETTA ENERGY SYSTEMS, INC.
FOR THE UNITED STATES
DEPARTMENT OF ENERGY

Printed in the United States of America. Available from
National Technical Information Service
U.S. Department of Commerce
5285 Port Royal Road, Springfield, Virginia 22161
NTIS price codes—Printed Copy: A03; Microfiche A01

This report was prepared as an account of work sponsored by an agency of the United States Government. Neither the United States Government nor any agency thereof, nor any of their employees, makes any warranty, express or implied, or assumes any legal liability or responsibility for the accuracy, completeness, or usefulness of any information, apparatus, product, or process disclosed, or represents that its use would not infringe privately owned rights. Reference herein to any specific commercial product, process, or service by trade name, trademark, manufacturer, or otherwise, does not necessarily constitute or imply its endorsement, recommendation, or favoring by the United States Government or any agency thereof. The views and opinions of authors expressed herein do not necessarily state or reflect those of the United States Government or any agency thereof.

ORNL/TM-9927
Distribution
Category UC-95d

METALS AND CERAMICS DIVISION

THICKNESSES, DENSITIES, AND CALCULATED THERMAL RESISTANCES FOR LOOSE-FILL ROCK WOOL INSTALLED IN TWO ATTIC SECTIONS OF A MANUFACTURED HOUSE

R. S. Graves
D. W. Yarbrough

Date Published — February 1986

Prepared for Office of
Buildings and Community Systems

Part of
The National Program for
Building Thermal Envelope Systems and Materials

NOTICE: This document contains information of preliminary nature. It is subject to revision or correction and therefore does not represent a final report.

Prepared by the
OAK RIDGE NATIONAL LABORATORY
Oak Ridge, Tennessee 37831
operated by
MARTIN MARIETTA ENERGY SYSTEMS, INC.
for the
U.S. DEPARTMENT OF ENERGY
under Contract No. DE-AC05-84OR21400

MARTIN MARIETTA ENERGY SYSTEMS LIBRARIES
3 4456 0167513 8

CONTENTS

ABSTRACT 1
INTRODUCTION 1
DESCRIPTION OF THE TEST 3
RESULTS OF THE TEST 3
CONCLUSIONS 9
RECOMMENDATIONS 10
ACKNOWLEDGMENTS 10
REFERENCES 10
APPENDIX A. SI METRIC EQUIVALENTS OF ENGLISH UNITS USED IN THIS REPORT 13
APPENDIX B. TEST RESULTS 15

THICKNESSES, DENSITIES, AND CALCULATED THERMAL RESISTANCES OF LOOSE-FILL ROCK WOOL INSTALLED IN TWO ATTIC SECTIONS OF A MANUFACTURED HOUSE*

R. S. Graves and D. W. Yarbrough

ABSTRACT

The effect of vibrations due to manufacturing and transport on the thickness, density, and calculated thermal resistance (R-value) of loose-fill rock wool insulation installed in two manufactured home units has been determined. Thickness and density measurements on blown attic insulation were made after installation, at the end of the manufacturing process, and after the units were towed 265 miles. These measurements were used to calculate R-values for the attic insulation. The end sections of the two units showed an overall insulation thickness decrease of about 16% and an average R-value change from 31.2 to 28.8 $ft^2 \cdot h \cdot °F/Btu$. An estimated R-value greater than 30 $ft^2 \cdot h \cdot °F/Btu$ resulted from averaging the end and middle sections of the two units. The effect of reduced thickness along the edges of the attic space was not included in the estimate.

INTRODUCTION

The thermal resistance of a loose-fill thermal insulation installed in an attic depends on thickness and density for a specific type of fiber. A test method for predicting the settled density of loose-fill cellulosic insulation has been in use for several years,[1] and efforts have been under way to collect data that define the extent of settling of loose-fill mineral fiber products in attics.[2-4] Thickness and density measurements are used to quantify settling, but thermal resistance (R-value) is the most important property and must be considered. Field examination of loose-fill attic insulation involves long-term monitoring of materials installed in accordance with label

*Research sponsored by the Office of Buildings and Community Systems, U.S. Department of Energy, under contract DE-AC05-84OR21400 with Martin Marietta Energy Systems, Inc.

specifications and amounts. Observed settling of above-label-density materials, such as loose-fill fiberglass at densities above 1.0 lb/ft^3 or loose-fill rock wool above 2.9 lb/ft^3, has been negligible.[2]

[Note: Although the policy of the Oak Ridge National Laboratory is to report its work in SI metric units, this report uses English units. The justification for doing so is that the U.S. insulation industry at present operates entirely with English units, so use of the SI units would limit the usefulness of this report for the primary readership. The SI equivalents of units used in this report are listed in Appendix A.]

The manufactured housing industry is providing an increasing percentage of new houses, and available data on the behavior of insulation in their structures are scarce. The study reported here was undertaken to add to the data available for attic insulation in manufactured houses.[5]

A limited study of the potential settlement of insulation blown into attics in manufactured houses was undertaken in cooperation with American Rockwool, Inc.,* and Mascot Homes, Inc.† Mascot Homes builds single- and double-wide houses in a manufacturing plant, and the manufactured units are then highway transported to buyers.

Mascot Homes utilizes American Rockwool blowing wool product, and they advertise an R-value of 30 ($ft^2 \cdot h \cdot °F/Btu$) in the attics of their manufactured houses. This insulation is used as one feature to satisfy the heat transmission resistance requirements related to manufactured housing. The information on the American Rockwool label indicates that the material should be installed at a density of 1.7 lb/ft^3. At this density an insulation thickness of 9.71 in. is specified for R-30.

Normally, the number of bags of insulation blown into an attic is calculated on the basis of the area of the attic. The objective of the test reported here was to determine the extent of settling of the blown-in insulation in the attics of two units (1) after witnessing the installation at 1.7 lb/ft^3 density, (2) after completion of the manufacturing process, and (3) after the units had been towed to the buyer.

---

*American Rockwool, Inc., Spring Hope Division, P.O. Box 880, Spring Hope, NC 27882.

†Mascot Homes, Inc., P.O. Box 127, Gramling, SC 29348.

DESCRIPTION OF THE TEST

The test house consisted of two units identified by Serial Numbers 2125A and B. Each unit was 64.1 ft long and 11.8 ft wide. The total attic area was 756 ft^2, and the insulation label showed that 36 twenty-nine-pound bags of insulation per unit would be required for an R-30 installation. There were 49 trusses that formed 48 bays in each attic (Fig. 1). The trusses were numbered from 1 to 49 starting from the front of the structure. Only seven bays at the front and eleven bays at the rear could be examined at the end of the test because of the way the attic is enclosed. Those accessible attic areas were designated as the primary test sites. Wooden rulers 18 in. long were attached to trusses as shown in Fig. 1(*b*) to measure the depth of insulation at the time of installation and later.

The insulation was blown into the attics on August 15, 1985, with a KSI Model 1230 machine. The machine was equipped with 130 ft of 4-in.-diam hose. The gate and air settings were made by the American Rockwool area manager (T. Hinson) to ensure installation that was consistent with the product label. As a preliminary test of machine settings approximately one bag of insulation was blown into a boxed-in area in the plant, and two density determinations were made with a cylindrical cutter. Analysis of in-situ loose-fill insulation density data indicates that the average measured density of 1.56 lb/ft^3 was satisfactory for the test. Attic application was done by the Mascot Homes crew with the exception of one-third of unit A in which the insulation was installed by Mr. Hinson. Thirty-seven bags of insulation were installed in each unit on the basis of nominal dimensions of 64 ft by 12 ft. In addition to the attic insulation, two 2-ft by 2-ft boxes, each with an attached ruler, were filled to a depth of approximately 12 in. with the same product. One box was placed inside each unit to determine if floor vibration would produce settling different from that in the attics.

RESULTS OF THE TEST

After the insulation was installed, manila file folders with centered slots were slipped over the seven rulers in the accessible regions

ORNL-DWG 85-15654R

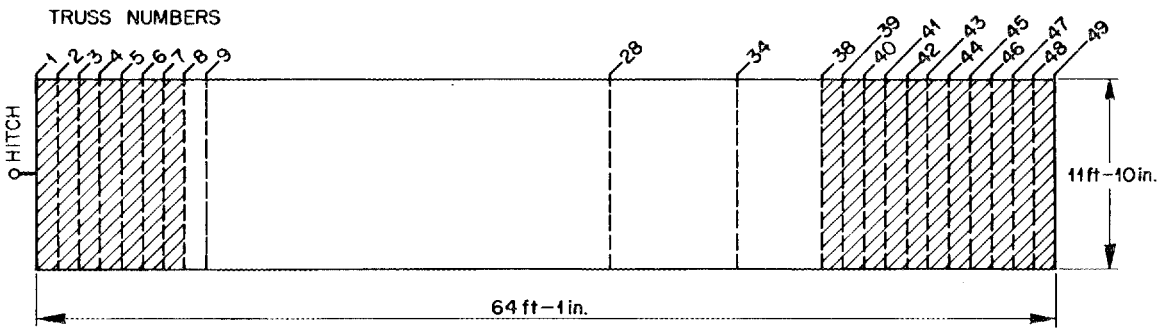

NOTES:

a. WHEELS ARE BETWEEN TRUSSES 28 AND 34

b. HATCHED AREAS ARE PRIMARY TEST ZONES

(*a*)

ORNL-DWG 85-15656R

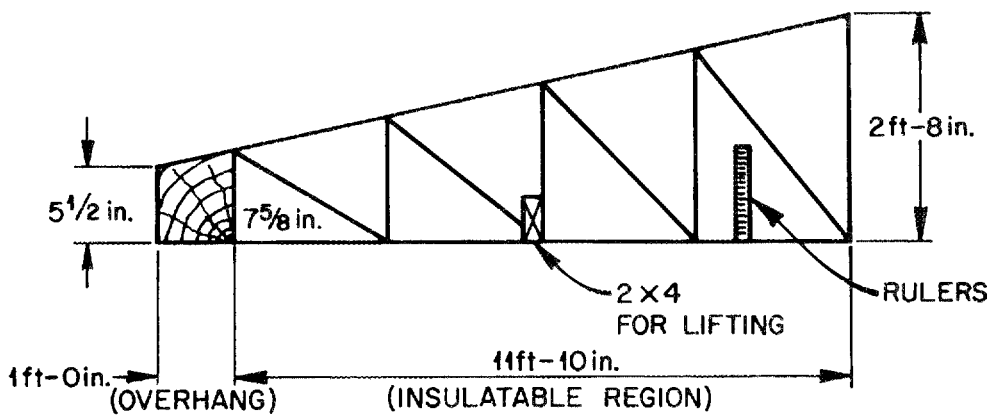

(*b*)

Fig. 1. Diagram showing accessible part of attic. (*a*) Top view. (*b*) End view.

in each unit. The purpose of the folders was to provide a thickness average over an area and to define the ruler reading. In unit B five density determinations were made with a cylindrical cutter. These were along the length of the unit, but only three were in the primary test areas shown in Figs. 1 and 2. The three in the test areas averaged 1.64 lb/ft^3, which was very close to the label density of 1.7 lb/ft^3. The two densities in the center area were 2.08 and 2.56 lb/ft^3. An average thickness of 10.17 in. was derived from 22 end-section thickness measurements. The average density in the end sections of unit A as determined with a cylindrical cutter was 1.77 lb/ft^3 at an average thickness of 10.04 in., and the middle section had an average density of 2.49 lb/ft^3 at an average thickness of 10.38 in. Equations (1) and (2) were used to calculate the R-values corresponding to the insulation density and thickness measurements in the end sections and middle sections of the two test units.

$$\text{R-value} = \text{thickness (in.)/apparent thermal conductivity } (k_a) \quad (1)$$

$$k_a = 0.0524 + 0.0246\rho + 0.3906/\rho \quad (2)$$

Equation (2) was obtained from published data for loose-fill rock wool insulation[2] and gives k_a in Btu•in./ft^2•h•°F at a mean temperature of 75°F with density, ρ, in lb/ft^3. The third term in the equation was adjusted to match American Rockwool's label information. Calculated end-section R-values as installed were 31.7 and 30.7 ft^2•h•°F/Btu for units A and B, respectively. All results from tests of units A and B are given in Appendix B and summarized in Tables 1 and 2.

The manufacturing steps that follow the attic insulation installation induce considerable vibration in the structure. Consequently, the thicknesses indicated by the in-situ rulers in the accessible end sections were observed at the end of manufacturing, and additional thickness measurements were made with probes as shown in Appendix B. Equation (3) was used to calculate the density, ρ_2, after a change in thickness to t_2, giving the information needed for the calculation of R-value.

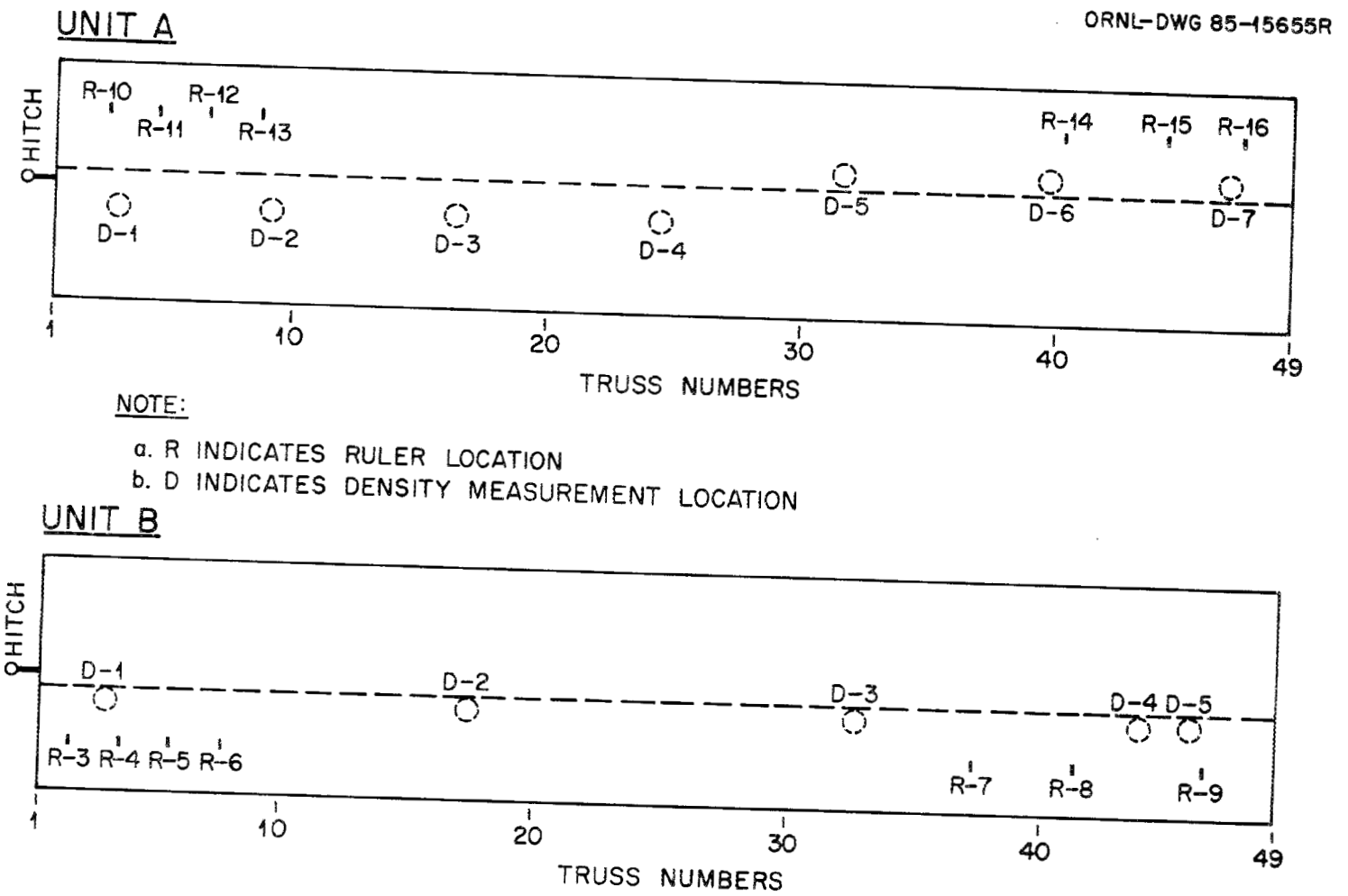

Fig. 2. Diagram of attic showing locations of thickness and density measurements.

Table 1. Density and thickness measurements

Location	Initial density (lb/ft^3)	Initial thickness (in.)	Thickness at end of manufacturing (in.)	Thickness at destination (in.)
		Unit A		
End section	1.77	10.04	9.31	8.35
Mid section	2.49	10.38		
		Unit B		
End section	1.64	10.17	9.47	8.55
Mid section	2.32	10.37		

Table 2. Calculated thermal resistances

Location	Initial value ($ft^2 \cdot h \cdot °F/Btu$)	At end of manufacturing ($ft^2 \cdot h \cdot °F/Btu$)	At destination ($ft^2 \cdot h \cdot °F/Btu$)	Change in R-Value (%)
		Unit A		
End section	31.7	30.6	29.0	−8.5
Mid section	38.4		33.7[a]	−12.2
		Unit B		
End section	30.7	29.8	28.4	−7.5
Mid section	37.3		33.3[a]	−10.7

[a]Calculated by using percent decrease in thickness from end sections.

$$\rho_2 = \rho_1 t_1 / t_2 \tag{3}$$

Six end-section rulers remained in place in unit B at completion of construction, and seven end-section rulers remained in place in unit A. The average end-section thickness in unit A was 9.31 in., and the average end-section thickness in unit B was 9.47 in. The end-section R-values corresponding to the end-of-manufacture thicknesses are 30.6 and 29.8 $ft^2 \cdot h \cdot °F/Btu$ for units A and B, respectively.

The file folder at one location showed an indentation at the end of manufacturing, so the folders were removed to prevent compression due to folder movement. The insulation thicknesses determined in the end sections after removal of the folders represent a starting point for evaluating the effect of transport. The two units were towed from Gramling, S.C., to Princeton, W. Va., by Mascot Home drivers following normal delivery procedure. The units were towed 265 miles in 5 h for an average speed of 53 mph.

Thicknesses in the accessible end sections of both units were determined after the 265-mile trip. Unit A end-section thicknesses averaged 8.35 in. for an R-value of 29.0 $ft^2 \cdot h \cdot °F/Btu$, and unit B end-section thicknesses averaged 8.55 in. for an R-value of 28.5 $ft^2 \cdot h \cdot °F/Btu$. The end sections of the manufactured units are believed to provide a severe test because movement results from wheel vibrations and flexing of the structure.

The insulation in boxes on the floors of the two units showed little settlement. The boxes in units A and B were positioned 6 and 20 ft, respectively, from the hitch end. Average initial insulation thicknesses determined by 10 probes and a fixed ruler in each box were 12.56 in. and 14.21 in. in units A and B, respectively. Similarly determined thicknesses in units A and B after transport were 12.15 in. and 14.04 in., respectively. A measurement at the end of the test showed that the insulation in the boxes was at a density of about 2.5 lb/ft^3.

The measurements completed after installation, end of construction, and after transport are summarized in Table 1 along with initial densities. Calculated R-values for the three examinations are listed in Table 2. The results in Tables 1 and 2 show that there was a 16% decrease in the thickness of insulation in the test sections. The calculated decrease in R-value in the test sections was 8%. The higher-density material in the unit mid sections should be less affected by vibration,[3] and this was demonstrated by the boxed materials. If, however, mid-section R-values are reduced by the values derived for the ends and an overall R-value is obtained by averaging the end values and mid-section values, then unit A has a final value of 31.4 $ft^2 \cdot h \cdot °F/Btu$ and unit B has a final value of 30.9 $ft^2 \cdot h \cdot °F/Btu$. These averages are for the central region of the structure and do not include corrections for tapering of the insulation near the edges.

CONCLUSIONS

This test was limited to observations on two manufactured units with most of the measurements being made in the end sections. The thickness of the rock wool in the end sections decreased by about 16% between installation and delivery. Calculated thermal resistances in the end sections, however, decreased by about 8% after adjustments were made for increased density. The calculated R-values of the mid sections of the units were initially greater than end-section R-values because of higher density and greater thickness. Final R-values for the mid sections were calculated on the assumption that settling of the high-density insulation would not exceed that of the lower-density end-section insulation. Equal weighing of calculated end-section and mid-section R-values resulted in an average destination value exceeding 30 $ft^2 \cdot h \cdot °F/Btu$ near the high point in the attic.

RECOMMENDATIONS

The results of this study indicate a need for additional data on thermal resistances present in manufactured housing units after transport to the consumer. The data base for loose-fill insulations in attic applications should be expanded to include all candidate materials installed to provide representative R-values. Future measurement plans should include provisions for repeated density and thickness measurements throughout the attic. Computer simulations and additional field data could provide thermal performance predictions for insulations installed at different thicknesses and densities because of the sometimes limited attic space.

ACKNOWLEDGMENTS

The authors extend thanks to R. A. Sullivan and T. Hinson of American Rockwool, Inc., for coordinating this attic insulation test program and to R. L. Camp, Jr., of Mascot Homes, Inc., for participating in the tests. The report profitted from reviews by D. L. McElroy, T. S. Lundy, S. L. Matthews, and W. Gerken. The suggestions of the reviewers and the work done by Brenda Hickey, Sherry Samples, and Carolyn Whitus to prepare the draft are acknowledged and appreciated. O. A. Nelson edited the draft, and A. R. McDonald prepared the manuscript for publication.

REFERENCES

1. *Federal Specification, Insulation Thermal (Loose-Fill for Pneumatic or Poured Application): Cellulosic or Wood Fiber*, Specification GSA HH-I-515D.

2. D. L. McElroy, D. W. Yarbrough, and R. S. Graves, "The Thickness and Density of Loose-Fill Insulations After Installation in Residential Attics," in proceedings of DOE/ASTM Conference, Dallas, Dec. 2–6, 1984, American Society for Testing and Materials, Philadelphia, in press.

3. D. W. Yarbrough, J. H. Wright, D. L. McElroy, and T. F. Scanlan, "Settling of Loose-Fill Insulations Due to Vibration," pp. 703–74 in *Thermal Insulation, Materials and Systems for Energy Conservation in the '80s*, ASTM STP 789, F. A. Govan, D. M. Greason, and J. D. McAllister, eds., American Society for Testing and Materials, Philadelphia, 1983.

4. D. L. McElroy, D. W. Yarbrough, and R. S. Graves, "An In-Situ Study of Attic Loose-Fill Thermal Insulation in Residential Applications," pp. 343–57 in *Thermal Performance of the Exterior Envelopes of Buildings II*, ASHRAE SP-38, American Society of Heating, Refrigerating and Air-Conditioning Engineers, Inc., New York, 1983.

5. *An Investigation of Settling of Blown Rockwool Insulation*, Test Report RAD-319, RADCO, Carson, Calif., 1982.

Appendix A

SI METRIC EQUIVALENTS OF ENGLISH UNITS USED IN THIS REPORT

Property	English unit	SI equivalent
Dimension	in.	25.4 mm
Dimension	ft	0.3048 m
Density	lb/ft^3	16.02 kg/m^3
Thermal conductivity	$Btu \cdot in./ft^2 \cdot h \cdot °F$	0.144 W/m K
Thermal resistance	$ft^2 \cdot h \cdot °F/Btu$	0.1762 K m^2/W
Temperature	°F	°C = (5/9)(°F − 32)
Temperature difference	°F	°C = (5/9)°F
Distance	mile	1.6 km

Appendix B

TEST RESULTS

Table B.1. Density (lb/ft^3) and thickness (in.) measurements for unit A

Location[a]	Initial	At end of manufacture	At destination
		Density (thickness)[b]	
3–4	1.863 (10.33)		
9–10	1.614 (9.12)		
39–40	1.742 (9.41)		
45–46	1.866 (11.02)		
16–17	2.578 (9.83)		
24–25	2.333 (11.21)		
32–33	2.571 (10.09)		
		Thickness with probes[b]	
3–4		8.02	7.32
5–6		8.76	7.85
39–40		10.62	9.50
45–46		9.68	8.68
		Thickness with rulers	
3	9.06	8.50	8.00
5	10.00	8.75	7.25
7	10.00	9.00	8.00
9	10.56	10.00	9.50
41	10.25	9.25	8.12
44	10.62	10.25	9.00
47	11.06	10.25	8.75

[a]See Fig. 1 for truss numbering system.

[b]Thickness values are the average of five measurements.

Table B.2. Density (lb/ft^3) and thickness (in.) measurements for unit B

Location[a]	Initial	At end of manufacture	At destination
		Density (thickness)[b]	
3–4	1.560 (8.86)		
43–44	1.644 (9.20)		
45–46	1.726 (12.59)		
17–18	2.077 (10.24)		
32–33	2.563 (10.50)		
		Thickness with probes[b]	
3–4		8.64	8.27
6–7		9.83	8.92
39–40		10.33	9.24
48–49		10.16	8.68
		Thickness with rulers	
2	10.00	7.50	7.00
4	9.69	8.75	8.25
6	10.56	9.50	8.88
8	10.62	[c]	
37	9.94	8.50	7.88
41	9.31	8.62	7.38
46	10.38	8.50	7.38

[a]See Fig. 1 for truss numbering system.

[b]Thickness values are the average of five measurements.

[c]Ruler was damaged.

ORNL/TM-9927
Distribution
Category UC-95d

INTERNAL DISTRIBUTION

1–2. Central Research Library
3. Document Reference Section
4–5. Laboratory Records Department
6. Laboratory Records, ORNL RC
7. ORNL Patent Section
8. R. W. Barnes
9. E. E. Bloom
10. R. S. Carlsmith
11. J. A. Carpenter
12. K. W. Childs
13. J. E. Christian
14. G. E. Courville
15. W. Fulkerson
16–25. R. S. Graves
26. W. R. Huntley
27. M. A. Karnitz
28. T. S. Lundy
29–38. M. C. Matthews
39. D. L. McElroy
40. H. McLain
41. J. W. Michel
42. W. R. Mixon
43. M. W. Rosenthal
44. A. C. Schaffhauser
45. J. O. Stiegler
46–48. P. T. Thornton
49. T. J. Wilbanks
50–59. D. W. Yarbrough
60. R. J. Charles (Consultant)
61. G. Y. Chin (Consultant)
62. H. E. Cook (Consultant)
63. Alan Lawley (Consultant)
64. W. D. Nix (Consultant)
65. J. C. Williams (Consultant)

EXTERNAL DISTRIBUTION

66. P. R. Achenbach, 1322 Kurtz Road, McLean, VA 22101
67. R. L. Alumbaugh, Code L52 Naval Civil Engineering Laboratory, Port Hueneme, CA 93043
68. R. W. Anderson, 7090 Tecumseh Lane, Chanhassen, MN 55317
69. F. Arumi-Noe, School Of Architecture, University of Texas, Austin, TX 78712
70. G. L. Askew, Tennessee Valley Authority, 2S51 D Signal Place, 1101 Market Street, Chattanooga, TN 37402-2801
71. E. L. Bales, School of Architecture, New Jersey Institute of Technology, Newark, NJ 07102
72. C. G. Bankvall, Associate Professor, Swedish National Testing Institute, P.O. Box 857 S-501, Boras, Sweden
73. G. B. Barney, Portland Cement Association, Construction Technology Laboratory, 5420 Old Orchard Road, Skokie, IL 60077
74. J. M. Barnhart, Thermal Insulation Manufacturers Association, 7 Kirby Plaza, P.O. Box 686, Mount Kisco, NY 10549
75. J. R. Blasius, No-Tox Products, Inc., P.O. Box 6532, 50 North 41st Avenue, Phoenix, AZ 85009
76. M. Bomberg, National Research Council of Canada, Building M-24, Montreal Road, Ottawa, Ontario, Canada K1A 0R6
77. B. Bromley, American Rockwool, Inc., P.O. Box 880, Spring Hope, NC 27882
78. W. C. Brown, National Research Council of Canada, Division of Building Research, Ottawa, Ontario, Canada K1A 0R6
79. R. D. Busch, AREA Inc, Union Square, 111 Gold Avenue, SE, Albuquerque, NM 87102

80. H. W. Busching, 214 Lowry Hall, Department of Civil Engineering, Clemson University, Clemson, SC 29631
81. J. H. Cable, John Cable Associates, Inc., Architects and Planners, 510 Fontaine Street, Alexandria, VA 22302
82. S. H. Cady, Executive Vice President, Mineral Insulation Manufacturers Association, 382 Springfield Avenue, Summit, NJ 07901
83. T. J. Cardenas, Steven Winter Associates, 6100 Empire State Building, New York, NY 10001
84. W. Carroll, Lawrence Berkeley Laboratory, Building 90, Room 2056, Berkeley, CA 94720
85. P. Cleary, Lawrence Berkeley Laboratory, Building 90-3074, Berkeley, CA 94720
86. H. I. Cohen, Consumer Product Safety Commission, 5401 Westbard Ave., Washington, DC 20207
87. A. B. Coleman, Tennessee Valley Authority, 1101 Market Street, Chattanooga, TN 37402-2801
88. G. Coleman, ACEC Research & Management Foundation, 1015 15th Street, NW, Suite 802, Washington, DC 20005
89. R. Davis, 3073 Willoughby Road, Mason, MI 48854
90. B. J. Dempsey, Civil Engineering Laboratory, 1205 New Mark, 208 N. Romine, Urbana, IL 61801
91. M. W. Dizenfeld, P.E., Office of Public Housing, Department of Housing and Urban Development, 451 7th Street SW, Washington, DC 20410-5000
92. D. Dorius, U.S. House of Representatives, Subcommittee of Housing and Community Development of the Committee on Banking, Finance and Urban Affairs, Ninety-Eighth Congress, 2128 Rayburn House Office Building, Washington, DC 20515
93. J. G. Driggans, Tennessee Valley Authority, 2S55 D. Signal Place, Chattanooga, TN 37402-2801
94. R. S. Dougall, University of Pittsburgh, Department of Mechanical Engineering, Pittsburgh, PA 15261
95. W. P. Ellis, Standards Consultant, 754 Bob-Bea Lane, Harleysville, PA 19438
96. D. M. Evans, Jr., Steven Winter Associates, Inc., 6100 Empire State Building, New York, NY 10001
97. P. W. Fairey III, Florida Solar Energy Center, 300 State Road 401, Cape Canaveral, FL 32920
98. J. Fandey, Consumer Products Safety Commission, Room 760, WTB, Washington, DC 20207
99. H. A. Fine, 949 Wishbone Circle, Lexington, KY 40502
100. D. M. Firman, Headquarters, Air Force Engineering and Services Center, HQ AFESC/DEMM, Tyndall AFB, FL 32403
101. W. E. Fitch, P.E., Southwest Certification Services Inc., 6800 Alamo Downs Parkway, San Antonio, TX 78238
102. R. R. Gerace, W. R. Grace Co., 62 Whittemore, Cambridge, MA 02140
103. C. F. Gilbo, Journal of Thermal Insulation, 201 East Ross Street, Lancaster, PA 17602
104. G. Gillette, American Institute of Architects Foundation, 1735 New York Avenue, NW, Washington, DC 20006
105. B. F. Gilmartin, Government Marketing, Owens-Corning Fiberglas, 900 17th St. NW, Washington, DC 20006
106. L. R. Glicksman, Massachusetts Institute of Technology, Department of Mechanical Engineering, Room 3-164, Cambridge, MA 02139

107. R. D. Godfrey, Owens-Corning Fiberglas, Technical Center, P.O. Box 415, Granville, OH 43023
108. W. P. Goss, Mechanical Engineering Department, University of Massachusetts, Amherst, MA 01003
109. F. A. Govan, ZBA, Inc., 23 East 7th St., Cincinnati, OH 45202
110. A. Greenberg, 24 Mercer Road, Murray Hill, NJ 07974
111. E. I. Griggs, Tennessee Technological University, Department of Mechanical Engineering, Box 5014, Cookeville, TN 38505
112. R. A. Grot, National Bureau of Standards, Building 226, Room B114, Gaithersburg, MD 20899
113. C. Guilford, 20427 73rd Court, NE, Bothell, WA 98011
114. P. Guttmann, U.S. Borax and Chemical, 3075 Wilshire Blvd., Los Angeles, CA 90010
115. D. Harris, National Institute of Building Sciences, 1015 15th Street, NW, Washington, DC 20005
116. D. T. Harrje, 24 Autumn Hill Road, Princeton, NJ 08540
117. R. Hauser, Hauser Laboratories, P.O. Box G, Boulder, CO 80306
118. J. L. Heldenbrand, National Bureau of Standards, Building 226, Room A313, Gaithersubrg, MD 20899
119. W. C. Hitchings, National Forest Products Association, 1619 Massachusetts Avenue, NW, Washington, DC 20036
120. B. Howard, National Concrete Masonry Association, P.O. Box 781, Herndon, VA 22070
121. K. C. Howerton, Federal Trade Commission, 6th and Pennsylvania Avenue, NW, (425 Bicentennial), Washington, DC 20580
122. J. R. Hughes, Solar Age, Solar Vision, Inc., Harrisville, NH 03450
123. J. G. Hust, Chemical Engineering Science Division, National Engineering Laboratory, National Bureau of Standards, Boulder, CO 80303
124. C. W. Jennings, P.E., Tennessee Valley Authority, 3S46D-C Signal Place, 1101 Market Street, Chattanooga, TN 37402-2801
125. J. F. Kimpflen, CertainTeed Corporation, P.O. Box 860, Valley Forge, PA 19482
126. W. Kleinfelder, Underwriters Laboratories, Inc., 333 Pfingston Road, Northbrook, IL 60062
127. P. G. Klemens, University of Connecticut, Box U-46, Storrs, CT 06268
128. J. Klems, Lawrence Berkeley Laboratory, Building 90, Room 3111, Berkeley, CA 94720
129. K. E. Kneidel, Babcock & Wilcox Company, Research and Development Division, 1562 Beeson Street, Alliance, OH 44601
130. C. J. Korhonen, U.S. Army Cold Regions Research and Engineering Laboratory, 72 Lyme Road, Hanover, NH 03755
131. W. M. Kroner, Rensselaer Polytechnic Institute, Center for Architectural Research, Troy, NY 12181
132. F. Kubovich, Electra Manufacturing Corporation, 1133 S. McCord Road, Holland, OH 43528
133. R. A. LaCosse, National Roofing Contractors Association, 8600 Bryn Mawr Avenue, Chicago, IL 60631
134. A. Lannus, Residential & Commercial Program, ECUT/EMU, Electric Power Research Institute, P.O. Box 10412, Palo Alto, CA 94303
135. D. C. Larson, Department of Physics and Atmospheric Science, Drexel University, 32nd and Chestnut Streets, Philadelphia, PA 19104

136. E. Leger, P.O. Box 409, New Ipswich, NH 03071
137. R. Leuthold, Fiber-Chem, Inc., Box 448, Bucyrus, OH 44820
138. W. Linander, EURIMA, Association Sans But Lucratif, Algade 5-K, DK-4000, Roskilde, Denmark
139. J. Lind/B. Nelson, Minnesota Department of Energy and Economic Development, 900 American Center Building, 150 East Kellogg Boulevard, St. Paul, MN 55101
140. G. W. Lou, Engineered Nonwoven Structures Division, E. I. Du Pont De Nemours & Co., Inc., Textile Fibers Department, Old Hickory, TN 37138
141. M. D. Lyberg, SIB Box 785, Gavle, Sweden
142. H. R. Marien, Headquarters, Air Force Engineering & Services Center, HQ AFES/DEMM, Tyndall AFB, FL 32403
143. P. C. Martin, Manville Service Corporation, Research and Development Center, P.O. Box 5108, Denver, CO 80217
144. S. L. Matthews, 701 Cresta Road, Colorado Springs, CO 80906
145. G. A. Matzkanin, Southwest Research Institute, P.O. Drawer 28510, San Antonio, TX 78284
146. R. McCluney, Florida Solar Energy Center, 300 State Road 401, Cape Canaveral, FL 32920
147. R. E. McCommons, Association of Collegiate Schools of Architecture, 1735 New York Avenue, NW, Washington, DC 20006
148. J. McCorkle, 6720 S. Steele Street, Littleton, CO 80122
149. D. R. McCullough, Urethane Foam Contractors Association, 4302 Airport Boulevard, Austin, TX 78722-1099
150. D. McGuire, Regal Industries, Route 1, Box 46, Crothersville, IN 47229
151. P. E. McNall, National Bureau of Standards, Building 226, Room B226 Gaithersburg, MD 20899
152. K. Mentzer, MIMA, 382 Springfield Avenue, Summit, NJ 07901
153. R. Milanese, Perlite Institute, 6268 Jericho Turnpike, Commack, NY 11725
154. G. Miller, Jim Walter Research Corp., 10301 9th Street, N, St. Petersburg, FL 33702
155. M. Millspaugh, Reflectix, Inc., P.O. Box 108, Markeville, IN 46056
156. M. Milne, Graduate School of Architecture and Urban Planning, UCLA, Los Angeles, CA 90024
157. M. P. Modera, Lawrence Berkeley Laboratory, Building 90, Room 3074, Berkeley, CA 94720
158. E. Mohler, University of Pennsylvania, The Graduate School of Fine Arts, 102 Meyerson Hall CJ, Philadelphia, PA 19104
159. D. E. Morgenroth, 27880 White Road, Perrysburg, OH 43551
160. P. Mullins, Tennessee Valley Authority, Box 99, Jackson, TN 38301
161. P. G. Mulroney, VVKR, Inc., 901 North Pitt St., Alexandria, VA 22314
162. E. Nowman, Fi-Foil Company, Inc., 1620 12th Avenue, N, Great Falls, MT 59401
163. J. Ohi, Solar Energy Research Institute, 1617 Cole Boulevard, Golden, CO 80401
164. T. J. Ohlemiller, National Bureau of Standards, Center for Fire Research, Gaithersburg, MD 20899

165. C. M. Pelanne, 4900 Pinyon Drive, Littleton, CO 80123
166. L. Peterson, Technical Services, Division of Thermoguard Insulation Company, 1040 Andover Park West, Seattle, WA 98188
167. F. J. Powell, National Bureau of Standards, Building 226, Room B218, Gaithersburg, MD 20899
168. P. Rains, Residential Technical Program Administrator, 444 Metroplex Drive, P.O. Box 110140, Nashville, TN 37222-0140
169. M. Reitz, New England Builder, P.O. Box 278, Montpelier, VT 05602
170. B. Rennex, National Bureau of Standards, Building 226, Room B114, Gaithersburg, MD 20899
171. D. Robertson, Energy R&D Information Center, Suite M, 457 Washington, SE, Albuquerque, NM 87108
172. J. M. Roehm, Jack M. Roehm & Associates, P.O. Box 887, Virginia Beach, VA 23451
173. W. J. Rossiter, Jr., Building Materials Division, Center for Building Technology, National Bureau of Standards, National Engineering Laboratory, Gaithersburg, MD 20899
174. M. W. Rupp, DSET Laboratories, Inc., Box 1850, Black Canyon Stage 1, Phoenix, AZ 85029
175. J. Samos, NASA Langley Research Center, Mail Stop 139A, Hampton, VA 23665
176. E. Schaffer, PFS, 2402 Daniels Street, Madison, WI 53716
177. T. R. Schneider, Energy Utilization, Conservation and Technology Department, Electric Power Research Institute, P.O. Box 10412, Palo Alto, CA 94303
178. R. C. Schroter, Product Technical Service Associates, 120 Village Square, Suite 121, Orinda, CA 94563
179. M. Schuetz, Massachusetts Institute of Technology, 77 Mass. Avenue, Room 7-038B, Cambridge, MA 02139
180. W. W. Seaton, ASHRAE, 1791 Tullie Circle, NE, Atlanta, GA 30329
181. S. Selkowitz, Lawrence Berkeley Laboratory, Building 90, Room 3111, Berkeley, CA 94720
182. M. Sherman, Jim Walter Corporation, 10301 9th Street North, St. Petersburg, FL 33702
183. P. H. Shipp, Owens-Corning Fiberglas Corporation, Technical Center, Building 20-3, Granville, OH 43023
184. C. J. Shirtliffe, Building R-105, UFFI Unit, National Research Council of Canada, Ottawa, Ontario, Canada K1A 0R6
185. T. T. Shishman, Area, Inc., Union Square, 111 Gold Avenue, SE, Albuquerque, NM 87102
186. H. S. Smith, Cellin Manufacturing Inc., P.O. Box 224, 9610 Gunston Cove Road, Lorton, VA 22079
187. S. E. Smith, Dynatech R/D Company, 99 Erie Street, Cambridge, MA 02139
188. M. K. Snyder, Butler Mfg. Co. Research Center, 135th and Botts Road, Grandview, MO 64030
189. L. G. Spielvogel, Wyncote House, Wyncote, PA 19095-1499
190. K. Spittle, Spittle Industries, Inc., P.O. Box 828, Belmot, NC 28012
191. E. Stamper, New Jersey Institute of Technology, 323 High Street, Newark, NJ 07102
192. R. Sterling, University of Minnesota, Underground Space Center, 790 Civil and Mineral Engineering Building, 500 Pillsbury Drive, SE, Minneapolis, MI 55455

193. R. Sullivan, American Rockwool, Inc., Spring Hope, NC 27882
194. C. L. Tien, Department of Mechanical Engineering, University of California, Berkeley, CA 94720
195. T. W. Tong, Department of Mechanical and Aerospace Engineering, Arizona State University, Tempe, AZ 85287
196. H. R. Trechsel, H. R. Trechsel Association, P.O. Box 211, Germantown, MD 20874
197. R. L. Troyer, Manville Service Corporation, Research & Development Center, Ken-Caryl Ranch, Denver, CO 80217
198. G. A. Tsongas, Mechanical Engineering Department, Portland State University, P.O. Box 751, Portland, OR 97207
199. R. P. Tye, Dynatech R/D Company, 99 Erie Street, Cambridge, MA 02139
200. J. R. Tyler, U.S. Fiber Corporation, 101 South Main Street, Delphos, OH 45833
201. M. G. Van Geem, Construction Technology Laboratories, Portland Cement Association, 5420 Old Orchard Road, Skokie, IL 60077
202. C. R. Vander Linden, Manville Corporation, Ken-Caryl Ranch, P.O. Box 5108, Denver, CO 80217
203. J. D. Verschoor, 179 Gail Lane, Bailey, CO 80421
204. T. Vonier, Thomas Vonier Associates, Inc., 3741 "W" Street, NW, Washington, DC 20007
205. J. R. Wallace, Wallace Themographics, P.O. Box 8292, Richmond, VA 23226
206. J. R. Warner, ACEC Research and Management Foundation, 1015 15th St., NW, Washington, DC 20005
207. R. Weil, Department of Materials and Metallurgical Engineering, Stevens Institute of Technology, Castle Point Station, Hoboken, NJ 07030
208. R. Whitaker, Lescher and Mahoney, Inc., 110 W. Waltann Lane, Phoenix, AZ 85023
209. D. Whiting, Portland Cement Association, 5420 Old Orchard Road, Skokie, IL 60077
210. A. J. Willman, ACEC Research & Management Foundation, 1015 15th Street, NW, Washington, DC 20005
211. S. E. Zecher, AIA, Zecher Associates, 42 Fayette St., Cambridge, MA 02139

212–
224. DOE, Conservation and Renewable Energy, Forrestal Building, 1000 Independence Avenue, Washington, DC 20545

J. J. Boulin	P. Pierman
H. S. Coleman	S. M. Showard
L. T. Connor	J. A. Smith
E. C. Freeman	S. Tagore
W. Gerken	S. J. Taylor
M. Gorelick	K. Teichman
R. E. Oliver	

225–
226. DOE, Bonneville Power Administration, P.O. Box 3621, Portland, OR 97208

C. D. Auburg	E. Johannes

227. DOE, Oak Ridge Operations, P.O. Box E, Oak Ridge, TN 37831
Assistant Manager for Energy Research and Development

228. DOE, Oregon, 102 L&T Building, Salem, OR 97310
J. Kempfer

229–482. DOE, Technical Information Center, P.O. Box 62, Oak Ridge, TN 37831
For distribution as shown in DOE/TIC-4500, Distribution Category UC-95d (Energy Conversion-Buildings and Community Systems)