MARTIN MARIETTA ENERGY SYSTEMS LIBRARIES
3 4456 0148573 7

ORNL/TM-10157

ornl

OAK RIDGE NATIONAL LABORATORY

MARTIN MARIETTA

The Research and Development Analysis Modeling System World Natural Gas Model (RAMSGAS) Final Documentation

E. A. Browne
D. B. Reister
L. D. Trowbridge
J. V. Conopask
E. Hicks
P. Mihlmester

OAK RIDGE NATIONAL LABORATORY
CENTRAL RESEARCH LIBRARY
CIRCULATION SECTION
4500N ROOM 175
LIBRARY LOAN COPY
DO NOT TRANSFER TO ANOTHER PERSON
If you wish someone else to see this report, send in name with report and the library will arrange a loan.

Fossil Energy Program

OPERATED BY
MARTIN MARIETTA ENERGY SYSTEMS, INC.
FOR THE UNITED STATES
DEPARTMENT OF ENERGY

Printed in the United States of America. Available from
National Technical Information Service
U.S. Department of Commerce
5285 Port Royal Road, Springfield, Virginia 22161
NTIS price codes—Printed Copy: A05 Microfiche A01

This report was prepared as an account of work sponsored by an agency of the United States Government. Neither the United States Government nor any agency thereof, nor any of their employees, makes any warranty, express or implied, or assumes any legal liability or responsibility for the accuracy, completeness, or usefulness of any information, apparatus, product, or process disclosed, or represents that its use would not infringe privately owned rights. Reference herein to any specific commercial product, process, or service by trade name, trademark, manufacturer, or otherwise, does not necessarily constitute or imply its endorsement, recommendation, or favoring by the United States Government or any agency thereof. The views and opinions of authors expressed herein do not necessarily state or reflect those of the United States Government or any agency thereof.

ORNL/TM-10157

Engineering Physics and Mathematics Division

The Research and Development Analysis Modeling System World Natural Gas Model (RAMSGAS) Final Documentation

E. A. Browne*
D. B. Reister
L. D. Trowbridge
J. V. Conopask†
E. Hicks†
P. Mihlmester†

*Washington University, Department of Engineering and Policy, Campus Box 1106, St. Louis, MD 63130

†Applied Management Sciences, Inc., 962 Wayne Avenue, Suite 701, Silver Spring, MD 20910

Date Published: December 1986

Research sponsored by the
Department of Energy
Office of Advanced Fuels, Technology,
Extraction, and Environmental Controls

Prepared by
Oak Ridge National Laboratory
Oak Ridge, Tennessee 37831
operated by
Martin Marietta Energy Systems, Inc.
for the
U.S. Department of Energy
under contract No. DE-AC05-84OR21400

MARTIN MARIETTA ENERGY SYSTEMS LIBRARIES
3 4456 0148573 7

TABLE OF CONTENTS

Page

LIST OF TABLES v

LIST OF FIGURES vii

ABSTRACT ix

EXECUTIVE SUMMARY xi

CHAPTER 1. INTRODUCTION 1

1.1 THE RAMS SYSTEM 1
1.2 THE RAMSGAS MODEL 1
1.3 NEED FOR LONG-TERM MODELING 2
1.4 RAMSGAS PURPOSE 3

CHAPTER 2. MODEL DESIGN 5

2.1 THE WORLD NATURAL GAS SITUATION 5
2.2 MODELING DIFFERENCES BETWEEN OIL AND GAS MARKETS 8
2.3 PROJECT OBJECTIVES 9
2.4 DESIGN CONSIDERATIONS 11

CHAPTER 3. MODEL FEATURES 17

3.1 MODEL STRUCTURE 17
3.2 USER CONTROLLED PARAMETERS 20

CHAPTER 4. MODEL INPUT 21

4.1 SCENARIO INPUTS 21
4.2 ALIGNMENT PARAMETERS 27

CHAPTER 5. MODEL OUTPUT 33

5.1 RAMSGAS DEFAULT SCENARIO 33
5.2 RAMSGAS LOW AND HIGH GROWTH SCENARIOS 33

REFERENCES 45

APPENDIX A: RAMSGAS USER'S GUIDE 47

APPENDIX B: MODEL EQUATIONS DISCUSSION 63

LIST OF TABLES

		Page
Table 1.	Conventional Natural Gas Resources	6
Table 2.	World Demand for Oil and Gas	6
Table 3.	Historical Natural Gas Shares	7
Table 4.	Resources Modeled in RAMSGAS	12
Table 5.	Supply/Demand Connections Available in RAMSGAS	14
Table 6.	Oil Price Trajectory	21
Table 7.	Conventional Wellhead Cost Parameters	22
Table 8.	Conventional Resources Specifications	23
Table 9.	Unconventional Wellhead Costs	24
Table 10.	Unconventional Resources Specifications	25
Table 11.	Energy Growth Rates (%/Year)	26
Table 12.	Supply/Demand Coefficients	27
Table 13.	Transportation Costs ($/MMBTU)	29
Table 14.	Historical Demand for Oil and Gas	30
Table 15.	Region Boundaries as Defined in Default Scenario	31
Table 16.	Demand Summary	34
Table 17.	Production Summary	35
Table 18.	Price Summary	36
Table 19.	Trade Summary	37
Table 20.	North America Summary	39
Table 21.	Changed Input Parameters for Low Growth Scenario	40
Table 22.	Changed Input Parameters for High Growth Scenario	41
Table 23.	Low Growth Scenario North American Summary	42
Table 24.	High Growth Scenario North American Summary	43

LIST OF FIGURES

Page

Fig. 1. RAMSGAS Flow Diagram..... 18
Fig. A-1. Structural Flow Diagram..... 49
Fig. A-2. Welcome Menu..... 51
Fig. A-3. Range Directory Menu..... 52
Fig. A-4. RAMSGAS Schematic..... 53
Fig. A-5. Conventional Wellhead Costs Example..... 54
Fig. A-6. Unconventional Wellhead Costs Example..... 55
Fig. A-7. Table of Summaries..... 58
Fig. A-8. Print Menu..... 58
Fig. A-9. Graphics Menu..... 60
Fig. A-10. Sample Graph..... 60
Fig. A-11. Scenario Menu..... 61

ABSTRACT

The Research and Development Analysis Modeling System World Natural Gas Model (RAMSGAS) was developed for the U.S. Department of Energy, Office of Advanced Fuels, Technology, Extraction, and Environmental Controls, to support planning of unconventional gaseous fuels R&D. The DOE decided that a framework was needed that would allow analysts to easily vary assumptions about future world natural gas markets. The model is a scenario analysis tool constructed for IBM PC compatible micro-computers. The model structure is based on a traditional supply/demand framework, and also accounts for the non-renewable nature of gas resources. The model estimates consumption, production, and prices in each region every 5 years for conventional and unconventional natural gas, and oil. Demand for oil and gas is determined by energy growth rates and price-induced conservation, for each of the 9 demand regions which partition the world. Once demand estimates are established in each region, a share of that demand is allocated to natural gas, depending on the average gas price relative to projected oil prices. Gas is supplied by 11 conventional and 19 unconventional sources and market shares are determined according to relative delivered prices. Scenarios can be changed, saved, and retrieved easily and the results accessed through automatic printing and graphics routines.

EXECUTIVE SUMMARY

MODEL PURPOSE

This report for the Department of Energy's Office of Advanced Fuels, Technology, Extraction, and Environmental Controls (AFTEEC) documents the development of a microcomputer-based simulation model for use in R&D planning for unconventional gaseous fuels. The model is part of the Research and Development Analysis Modeling System (RAMS) developed by Oak Ridge National Laboratory and its subcontractor, Applied Management Sciences. The first model in this system, RAMSOIL,[1] was completed in July of 1986. The model documented here, RAMSGAS, will provide assistance in planning R&D for unconventional sources of natural gas. Some questions this model is intended to help answer are:

- Given different assumptions of prices, demand and conventional natural gas recovery rates, when do U.S. unconventional gaseous fuels begin to become commercially viable?
- How much reduction in unit costs is necessary to accelerate recovery and production of specific fuels and what effect will this have on market price, regional supply, and international trade?

RAMSGAS is intended to simulate the transition from natural gas to unconventional gas in the context of the forces that shape the world market for gaseous fuels. Like any model, RAMSGAS is a simplification of the real world. RAMSGAS simulates the supply and demand for gaseous fuels in the world for the next 40 years. The model is a complex tool, which provides the R&D planner with a consistent and flexible framework within which to examine many R&D planning questions.

MODELING CONSIDERATIONS

Conventional natural gas includes both natural gas associated with crude oil and natural gas that is not associated with crude oil. For a list of the types of unconventional natural gas see Table 4. The conventional world natural gas supply has been largely unexploited, but now contains about the same energy content as remaining conventional oil resources. Unconventional sources of natural gas are estimated to have a similar energy content, excluding the gas that may be produced from coal.

To the extent that these unconventional resources can be developed, world gas supplies can be significantly extended beyond the resource base currently available. North America, in particular, contains huge resources of unconventional gas that will require suitable technological development, coupled with a favorable economic and market environment, for successful commercial production. At the same time, vast amounts of low cost conventional natural gas exist in the Middle East and the USSR which could serve to meet long-term gas demands if the problems of transportation and distribution can be overcome. Another factor underlying the potential developments in the gas market is the status of competing fuels. In particular, world supply and price of oil can be expected to have a significant impact on gas market dynamics.

Any useful model of natural gas markets must incorporate all of these interactions and provide flexibility in projecting and analyzing future long-term trends. The objective of this project was to develop a model of supply and demand for natural gas that can be used by AFTEEC to explore possible scenarios for market penetration of unconventional gas. The model was to be tested and fully documented.

Five model attributes were specified: accessibility, transparency, flexibility, user-friendliness, and the ability to project the long-term (through 2030).

MODEL STRUCTURE

Due to differences between oil and gas markets, RAMSGAS had to have some significant design differences from RAMSOIL. The demand regions are geographically contiguous, and include the whole world. There are 30 supply regions: 11 conventional and 19 unconventional. Transportation costs between regions differ with distance and means of transport (pipeline or LNG). The possibility of substitution between oil and gas has been incorporated, as well as some dependence of gas price on world oil price.

RAMSGAS is based on a modified supply/demand framework. The model has three fundamental components: a demand module, a wellhead production cost module, and a supply/demand interface module. The demand for gas is a product of total demand for oil plus gas in each of the nine demand regions and the gas share. Demand for oil plus gas is forecast from the base year of 1980 through 2030 for each demand region, based on energy growth rates and conservation due to price increases.

For each of the 30 conventional and unconventional gas supply regions, wellhead production costs are calculated. To these are added transportation and distribution cost estimates associated with moving gas from the supply region to each of the demand regions. Based on a weighted average of these costs, and the world price of oil, fuel shares for gas and oil are computed for each demand region. The gas demand is the gas fuel share multiplied by the total demand for oil

plus gas. This demand is then met from the available supply regions in inverse proportion to the cost of gas from each region. The R&D planner has almost complete control over the cost estimates for each unconventional gas source in each year, and thus can compare contributions from unconventional resources under different cost/price/demand scenarios.

Important features of the model include:

- A directory menu that displays all major sections of the model, and a code for easily moving to the various sections;
- Many parameters that can be varied by the user;
- Built-in summary tables of:

  Demand
  Production
  Inter-regional Trade
  Prices
  North America Information

- Automatic printing and graphics routines that allow convenient access to model results and are useful for comparing scenarios; and
- Automatic scenario storing and retrieving, under user-specified names, for easy maintenance of many possible scenarios.

All model parameters can be changed by the user. However, a set of parameters can not be changed without changing the values backcast by the model in 1980. If the user wants to change some of these parameters, then the whole set of parameters must be changed to align the 1980 backcast to the historical data. The parameters that <u>can</u> be changed without realignment are:

- World oil price.
- Estimates of resource bases and cumulative production to 1980.
- Wellhead cost parameters for gas sources.
- Wellhead/technology costs for unconventional resources.

- Energy growth rates for oil and gas demand.
- Conservation coefficients.
- Fuel Share coefficients (rho).

The parameters that when changed will necessitate a careful realignment of the model are:

- Initial wellhead costs for conventional gas sources.
- Supplier choice coefficients (gammas).
- Transportation costs.

The remaining sections of this report discuss the world natural gas situation, details of model structure, sample runs and parameters, and provide insight into using the model for planning purposes. Appendix A contains the user's guide for the model. The equations of the model are given in Appendix B.

1. INTRODUCTION

This report is divided into five main chapters and several appendices. This chapter serves as an introduction to the project and this report. Chapter 2 is an overview of the world natural gas situation, model objectives, and design issues. Chapter 3 describes the model structure. Chapter 4 is a presentation of the input parameters in the default scenario and a brief introduction to using the model. Chapter 5 presents sample scenario runs and results, and briefly discusses them. The appendices provide a user's guide, and the equations of the model structure.

1.1 THE RAMS SYSTEM

This report describes the development of the second model in the Research and Development Analysis Modeling System (RAMS). The RAMS system was developed for the Department of Energy's Office of Advanced Fuels, Technology, Extraction, and Environmental Controls (AFTEEC), as a tool for long range planning of R&D for unconventional fuel technologies.

The first model developed in the RAMS system was the World Oil Model (RAMSOIL).[1] This report describes the development of the RAMS World Natural Gas Model (RAMSGAS), which is the next logical component of the RAMS system. RAMSGAS follows the same basic design premises as RAMSOIL, but is a stand-alone model.

1.2 THE RAMSGAS MODEL

The R&D Analysis and Modeling System -- World Natural Gas Model (RAMSGAS) is a microcomputer-based model designed to help in effective planning of R&D projects for unconventional gaseous fuel technology,

that are too long-range or risky to be supported by the private sector. It is a user-friendly model which simulates long-term gas market scenarios.

The RAMSGAS model includes detailed data on world natural gas supplies, regional demand estimates, and a framework that incorporates unconventional fuels into future production of world natural gas. The modeling time period is 1980 to 2030, computed in five-year increments.

The Oak Ridge National Laboratory and its subcontractor, Applied Management Sciences, developed RAMSGAS for use on the IBM PC using LOTUS 1-2-3 spreadsheet software. RAMSGAS, in combination with estimates by experienced analysts, will allow R&D planners to explore potential development patterns in the gas markets quickly, using scenario analysis. This approach was requested by AFTEEC to free their planners from cumbersome ties to mainframe computers and allow rapid comparison of differing assumptions.

1.3 NEED FOR LONG-TERM MODELING

Within the Department of Energy, the Deputy Assistant Secretary for Advanced Fuels, Technology, Extraction and Environmental Controls (AFTEEC) is responsible for the planning and implementation of R&D programs aimed at developing unconventional fuel technologies. These R&D programs concentrate on long-term, high risk investments which can yield potentially high pay-off in terms of successful introduction of unconventional gaseous fuel technologies.

In order to plan effective long-term R&D of unconventional gas, AFTEEC must consider many complex interactions in world energy markets. These interactions must be examined under a variety of

market assumptions. In particular, AFTEEC must analyze possible long-range trends in the world gas market to determine R&D priorities, production cost goals, and lead times for unconventional gaseous fuels R&D. In order for the R&D to be considered successful, it should result in technologies which are capable of producing gaseous fuels at a price which is competitive with remaining conventional natural gas and other alternative fuels at the time the technology is ready to enter the commercial market.

In recognition of this situation, AFTEEC has embarked upon the development of a planning framework which will allow R&D program decisions to be made in conjunction with analyses of long-term energy demand and markets for different types of fuel. In this way, R&D programs can be targeted toward technologies which show the most promise of producing fuels which can ultimately compete. The R&D can also be planned to develop these technologies over a suitable time frame, allowing the mature technology to enter the market at the appropriate time.

1.4 RAMSGAS PURPOSE

The RAMSGAS model will aid these efforts by simulating a range of long-term market scenarios, allowing the R&D planner to:

- Estimate the effect unconventional fuel production may have on reducing regional natural gas price, and on international trade of gas.
- Analyze how much reduction of unconventional fuel costs would be necessary to produce various levels of demand.
- Analyze the timing of market penetration by unconventional fuels, assuming either complete cost recovery or some level of government subsidy.

Like any model, RAMSGAS is a simplification of real-world behavior. RAMSGAS simulates the supply and demand for gaseous fuels in the world for the next 40 years. The demand will be influenced by economic growth and by competition from petroleum. As the petroleum resource is consumed, the cost of oil will rise and the world will turn to natural gas and unconventional oil. As the natural gas resource is consumed, its cost will rise and the world will turn to unconventional gas, to competing fuels (coal and electricity), and to conservation. The model allows the user to play out the transition from natural gas to unconventional gas in the context of the forces that shape the market.

2. MODEL DESIGN

The purpose of this chapter is to present a description of the objectives and design philosophy of RAMSGAS. The first part of this chapter is an introduction to the current world natural gas situation and the questions involved in modeling natural gas markets. Objectives of the model are then discussed along with the options that were considered in the design process.

2.1 THE WORLD NATURAL GAS SITUATION

A recent estimate by the United States Geological Survey (USGS)[2] of the ultimately recoverable resources of conventional natural gas is displayed in Table 1. The world total, 8984 trillion cubic feet (TCF), has about the same energy content as the USGS estimate[3] of the world total for conventional oil, 1718 billion barrels (BBL) (1718 BBL is equivalent to 9760 TCF). The world natural gas resource is largely unexploited; about 14% of the ultimate resource has been consumed. In contrast, about 26% of the ultimate oil resource has been consumed. By far, the largest resources of conventional natural gas are in Russia and the Middle East. The United States had a large resource base but has consumed about half of it.

In this report, unconventional gas is defined as including synthetic gas from coal and natural gas from tight sands, Devonian shales, coal beds, geopressured regions and gas hydrates. Excluding synthetic gas from coal, the economically recoverable resource of unconventional natural gas is probably about the same as the resource of conventional natural gas. Of course, the resource base for

unconventional gas is much more uncertain than the resource base for conventional gas. For a recent review of the unconventional gas resource base, see the study by the National Petroleum Council.[4]

Table 1. Conventional Natural Gas Resources

Region	Ultimate Resource (TCF)	Cumulative Production (%)
Africa	444	5
Alaska/Canadian Arctic	190	9
Asia	335	4
Canada	516	14
China	265	2
Latin America	538	15
Middle East	1946	4
Russia	2743	7
Oceania	200	4
United States (Lower 48)	1307	53
Western Europe	500	22
World	8984	14

Source: USGS, Reference 2.

Estimates of demand in 1980 for oil and gas in nine regions of the world are displayed in Table 2. The demand estimates are both

Table 2. World Demand for Oil and Gas, 1980

Region	Consumption (TCF) Gas	Oil	Gas Share (%)
North America	21.78	39.21	36
Latin America	2.30	10.28	18
Western Europe	8.61	28.53	23
Eastern Europe	16.42	22.80	42
China	0.50	3.78	12
Africa	0.75	3.01	20
Oceania	1.54	12.02	11
Asia	0.89	6.41	12
Middle East	1.32	4.02	25
Total	54.11	130.06	30

Source: EIA, Reference 5.

expressed in TCF equivalent. In the world, the gas share of the market for oil plus gas is about 30%. However, the use of natural gas varies widely in the various regions. In North America and Russia, the gas share is around 40%. In Western Europe, Latin America, the Middle East, and Africa, the gas share is about 20%. In Japan, China, and the rest of Asia, the share is nearer to 10%.

Historical data on market penetration of natural gas for the period 1950 to 1980 are displayed in Table 3. For the world, the gas share has steadily increased from 27% in 1950 to 32% in 1980. From 1950 to 1970, North America had the highest gas share in the world. By 1980, Eastern Europe had the highest gas share in the world. In response to the oil price shocks in the 1970's the gas share increased dramatically in Western Europe, China, Oceania, and Asia. If we assume that it is technically possible for all nations to have gas shares that are equal to (or greater than) the highest historical values (46%), then there are major opportunities for market penetration of natural gas in many regions of the world.

Table 3. Historical Natural Gas Shares of Demand for Oil Plus Gas

Region	1950	1960	1970	1980
North America	33	42	46	40
Western Europe	2	6	12	27
Oceania	1	2	3	12
S. & C. America	6	13	20	21
Africa	0	0	1	20
Middle East	0	11	30	24
Eastern Europe	17	29	40	44
China	1	10	7	13
Total	27	30	31	32

Source: IEA, Reference 6.

How will natural gas demand evolve in the next 50 years? This is the question that R&D planners need to consider to plan unconventional gas R&D. Many scenarios are possible. North America has a substantial commitment to natural gas but has used a large fraction of the resource. In the future, North America will need to turn to imported gas, unconventional gas, or alternate fuels. Russia has a large commitment to gas but has used only a small fraction of its resource. In the future Russia could become a major source of gas for Western Europe, Japan, Asia, and North America. The Middle East also has a large resource of natural gas that could become available to the world.

A fundamental difference between oil and natural gas is that gas is more difficult to transport and store than oil. To move gas long distances, the gas may be shipped in a pipeline or the gas may be compressed, liquified, transported, and decompressed. In North America and Russia an extensive system of pipelines exists to transport natural gas from the wellhead to the point of consumption. In most of the rest of the world, the pipeline system is not well developed. In the next 50 years, the world pipeline system could be expanded until gas has a large market share in all parts of the world.

2.2 MODELING DIFFERENCES BETWEEN OIL AND GAS MARKETS

In light of the situation just described, it is important to note certain significant complexities which surround modeling of gas markets as opposed to oil. These complexities created the need for some alterations in the basic model structure originally employed for RAMSOIL.

The key complexity surrounding world gas modeling is the fact that the market for natural gas is not worldwide, as oil is. Rather, natural gas is, for the most part, produced and consumed regionally. Thus, there exist several different regional markets for natural gas which are typically unconnected. Each region has its own production costs, its own transportation and distribution costs, and thus its own total delivered price for natural gas. The gas from each region must compete with imports from other regions and with alternative fuels. Interregional trade can occur via pipelines or transport of liquified natural gas (LNG). In addition, some regions have vast resources of unconventional natural gas such as the tight sand formations found in North America, which will require significant technological development in order to compete. This geographical attribute of world gas supply and demand adds significant complexity to a realistic model structure. Finally, another complexity is the interconnection of the oil and gas markets. There can be a substantial amount of substitution between them, and in some cases, irrespective of actual production costs, gas prices are set in response to oil prices.

2.3 PROJECT OBJECTIVES

As stated before, the goal of this project was to develop a flexible, easy-to-use framework for analyzing alternate world natural gas market scenarios, and the resulting implications for unconventional gaseous fuels R&D program development. The model also helps analyze the possible contribution of unconventional gaseous fuels to world energy supplies over the next fifty years. The project had five general objectives:

- Identify and analyze the major factors affecting future natural gas demand, price, and supply, and include those affecting unconventional gaseous fuels.

- Establish an analytical model on a system compatible with DOE's IBM PC computers using LOTUS 1-2-3 software.

- Document all underlying data and assumptions used in the model as well as the methods for altering model inputs.

- Test alternate scenarios for demonstration purposes and demonstrate model flexibility and ability to reproduce realistic projections from other sources.

- Identify areas for further model development.

Within these general objectives, there were five specific objectives that had been previously established for any model in the RAMS system. These goals are described below:

Long-term planning: Unconventional liquid and gaseous fuel technologies are long-term prospects. Many of these technologies are not expected to be technologically or economically viable until well into the 21st century. Therefore, a key design factor for the RAMS system was the ability to model scenarios over an extended time frame, specifically, through the year 2030.

Accessibility: AFTEEC planners felt that large-scale, mainframe computer models are not useful for effective day-to-day planning because they are not directly accessible by the user and require substantial time and resources to execute. Therefore, RAMS was designed to be run on a desk-top micro-computer under interactive, rapid-response conditions, thus ensuring accessibility by planning staff.

Transparency: In many previously developed energy models, key assumptions or parameters were imbedded in the model structure, and it was difficult for users to alter basic parameters and structural features. To provide a more flexible tool, RAMS was designed to be transparent to the user. This means all parameters, assumptions, connections, and even model equations can be understood by the user, and can be easily altered.

Flexibility: As a corollary to the above objective, a key design feature of RAMS was maximum flexibility in creating alternative scenarios, enabling analysts to see the effects of varying assumptions on R&D program decisions. A potential shortcoming of this feature, however, is that the user must be fairly knowledgeable about the economic and technological factors which he or she is controlling in the model, since unrealistic scenarios can easily be produced. This is a risk associated with model flexibility, and it is recognized by the model developers; however, it is felt that the advantages of such model flexibility significantly outweigh the disadvantages.

User-friendliness: A critical feature in planning the RAMS system was user-friendliness. R&D planners and program managers with little knowledge of computer programming languages and software must be able to access the model, execute scenarios, and retrieve output easily and quickly, without the need to consult extensive documentation at every turn. To meet this requirement (as well as the transparency requirement) RAMS was developed using LOTUS 1-2-3 spreadsheet software and its associated macro capabilities. The spreadsheet format of the model ensures that all parameters and data are accessible to the user.

2.4 DESIGN CONSIDERATIONS

This section briefly reviews some of the major issues that had to be resolved in designing this model. A central issue was the number of demand regions. The RAMSOIL model has three demand regions: OECD, OPEC, and LDC. Communist regions such as China and Russia were not included except as net exporters to the West. Because oil is easily transported and widely traded, RAMSOIL could calculate a single world oil price. The current world natural gas market is not so interconnected and displays striking regional differences.

Initially, we considered using the same demand regions for the gas model as for the oil model. However, to estimate the transportation costs for natural gas, we must know the physical distance between the supply region and the demand region and whether transportation will be by pipeline or LNG tanker. Thus, the regions must be determined by geographical proximity rather than by state of economic development. Furthermore, Russia is now and will be a major source of natural gas, and China could become a major demand region. Thus, we decided to include all of the population of the world in the demand regions. We used the nine demand regions; displayed in Table 2, and the 30 supply sources displayed in Table 4. Unfortunately, due

Table 4. Resources Modeled in RAMSGAS

CONVENTIONAL RESOURCES:

North America
Western Europe
South and Central America
Oceania
Africa
Middle East
Asia
Eastern Europe
China

UNCONVENTIONAL RESOURCES:

North American Blanket Tight Sands
North American Lenticular Tight Sands
North American Devonian Shale
North American Surface Coal Gasification
North American Underground Coal Gasification
North American Methane from Coal
North American Atlantic Gas Hydrates
North American Alaskan Gas Hydrates
North American Low BTU Gas
North American Geopressurized Gas
North American Generic 1
North American Generic 2

Asian Tight Sands
Asian Coal Gasification
Asian Methane from Coal
Asian Devonian Shale
Asian Generic 1
Asian Generic 2

European Gas from Coal

to size constraints of the model, not all possible trade linkages could be implemented. Table 5 shows the connections which are modeled in RAMSGAS.

A second key issue was interfuel substitution. In each region energy demand can be divided into sectors: residential, commercial, transportation, industrial, and electric utility. Within each sector, energy demand can be further subdivided by end use: local passenger transport, space heating, lighting, process steam, etc. Energy is consumed in capital equipment to provide energy services. In many types of equipment, oil and gas can be substituted at low cost. In the long-run coal and electricity can compete with oil and gas in various markets. Thus, a complete model of interfuel substitution would simulate short-run and long-run substitution in various end-use sectors. At a meeting in October 1985, AFTEEC decided that an elaborate demand model was outside the scope of this project. Thus, the RAMS natural gas model has a relatively simple demand model.

A third key issue was integration of the oil and gas models. The gas model could be made independent of the oil model, or it could be part of the oil model. Oil and gas are linked on both the supply and demand side. Most wells produce a mixture of oil, gas, and natural gas liquids; substitution between oil and gas has a major impact on the prices of oil and gas. The RAMSGAS model is not currently linked to the RAMSOIL model except nominally through the world oil price.

The final key design issue was the choice of computer language. Two choices were considered: LOTUS 1-2-3 and Turbo Pascal. The LOTUS 1-2-3 spreadsheet package is user friendly and transparent but it is cumbersome and requires a large amount of storage space. Turbo Pascal

Table 5. Supply/Demand Connections Available in RAMSGAS

DEMAND REGIONS	SUPPLY REGIONS
North America	US Lower 48 Canada Alaska/Arctic SA/CA Pipeline SA/CA LNG Asian LNG Middle Eastern LNG African LNG NA Unconventionals
South America	South and Central America Middle Eastern LNG African LNG US Tight Sands Asian LNG
Western Europe	Western Europe USSR Pipeline African LNG Middle Eastern LNG European Gas from Coal
Oceania	Oceania Asian LNG African LNG Middle Eastern LNG Alaskan LNG
Africa	Africa Middle East
Middle East	Middle East Africa
Asia	Asia USSR LNG Asian Unconventionals
China	China USSR Asian LNG Asian Unconventionals
EASTERN EUROPE	USSR Pipeline Middle East Asian Unconventionals

is a compiled language which can be used to produce menu-driven, user friendly models but the models are difficult to make transparent or flexible. Turbo Pascal can, however, be used to produce compact models that run quickly. The RAMSGAS model runs in LOTUS 1-2-3. The final version is approximately 270K bytes, and stored scenarios are about 23K each.

3. MODEL FEATURES

This chapter provides a qualitative description of the logic of the model. A mathematical description is given in Appendix B of this report. A flow diagram is shown in Fig. 1.

3.1 MODEL STRUCTURE

The best place to begin explaining the RAMSGAS model is with demand. The demand for energy is a derived demand. That is, energy is not desired for itself, but is desired because when combined with capital, it can provide services which are in demand (transportation, lighting, heat, etc.). This demand is influenced by many factors including: population change, economic activity, technological change, energy prices and energy taxes. One model formulation which accounts for most of these is a simple model which uses growth in Gross Domestic Product (GDP), and a factor representing the maturity of the economy and how efficiently energy is used there. While not providing sector end-use detail, the approach gives a good approximation of total primary energy usage. A slightly more simplified version of this approach is used in the RAMSGAS model, combining GDP growth and energy elasticities into energy growth rates. These rates represent only the growth in the oil and gas markets and thus oil plus gas demand is calculated directly instead of as part of total primary energy use.

Within this demand framework, price competition determines the eventual shares of oil and gas. A logit function calculates fuel shares based on the average relative costs of oil and gas, and historical fuel shares. The logit formulation has been successfully used in the Purchased Heat and Power System (PURHAPS)[7] and Oak Ridge

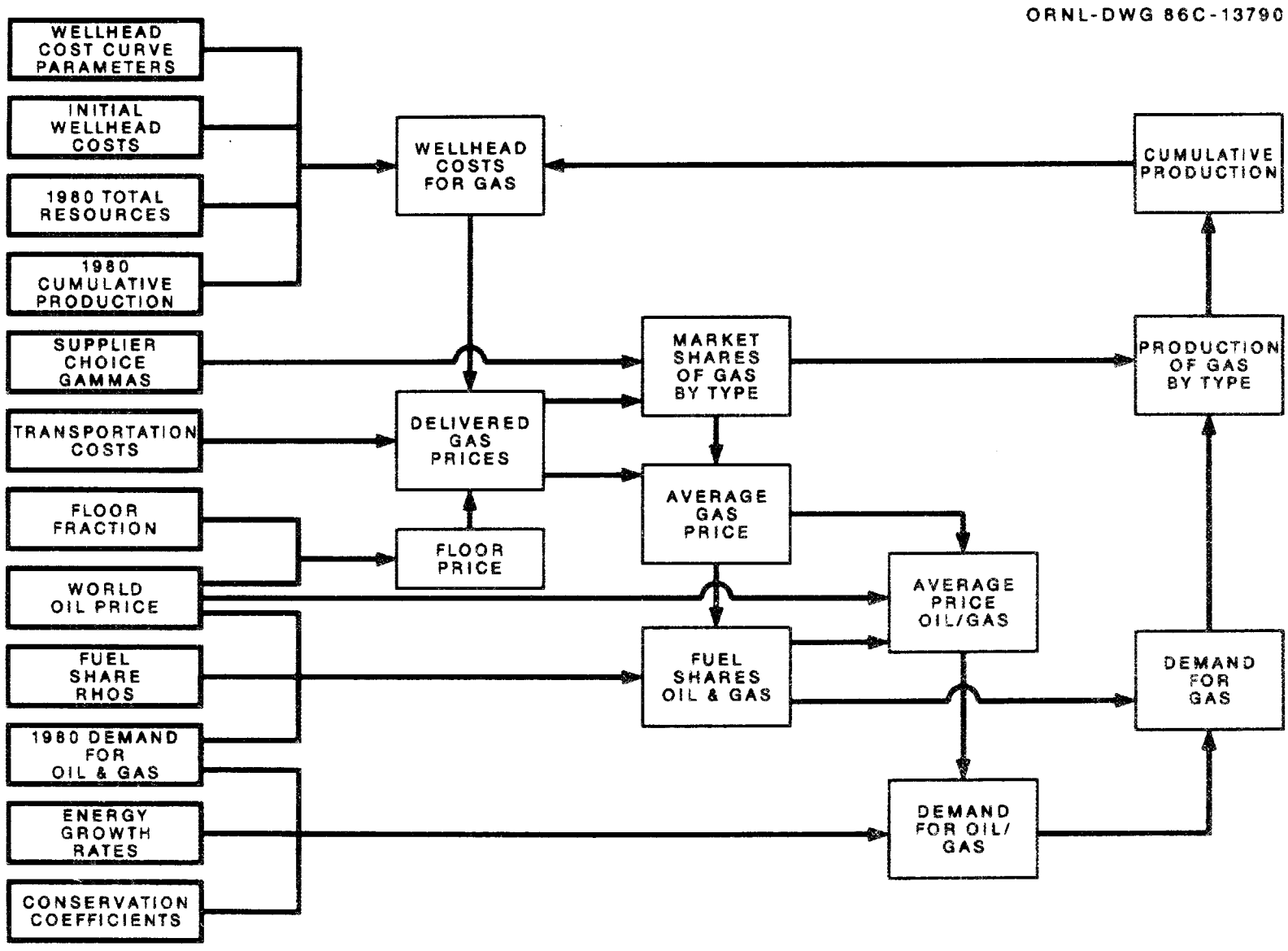

Fig. 1. RAMSGAS Flow Diagram

Industrial Model (ORIM).[8] In this approach, liquids and gases are assumed to compete against each other for market share. As oil prices rise through time (and even as natural gas reserves become more expensive to extract) the relative price comparison can produce a gradual switching of fuels with natural gas assuming a larger and larger share of total oil and gas demand.

In the RAMSGAS model, oil prices are input by the user for the time period 1980 through 2030. Delivered gas prices are determined by the costs of natural gas at the wellhead and the transportation and distribution costs associated with its use. The wellhead cost of gas is related by a wellhead cost curve to the magnitude of the ultimately recoverable reserves and cumulative production. The curve represents the assumption that the cheaper, easier-to-access gas will be discovered and produced before the more expensive gas is produced. Thus, wellhead costs increase according to the percentage of the resource used. In the model, curves are developed for both the conventional and unconventional natural gas resources. However, the base cost (or technology cost) for unconventional resources is specified each period, and thus unconventional gas prices are under much more control by the user. The delivered price of gas in each demand region is the final wellhead cost, plus transportation and distribution costs, and any economic rents. Moreover, this delivered price is never allowed to fall below a certain fraction of the world oil price, due to the ease of substitution between oil and gas. This lower limit is specified by the floor parameter.

Each demand region can obtain gas from more than one supply region. Generally, at least in the earlier years, most of the gas demanded is met by native production. The market share of each supply region in a demand region is determined by a logit function, and is

inversely proportional to the delivered price of gas from that supply region. The sales of gas by a supply region to a demand region depend on the market shares and the total demand for gas by the demand region. The total sales of gas to all connected demand regions determine the total production for each supply region.

The final stage of model calculations consists of summing the total production in each supply region over the five-year period (simulated as five times the production in the nominal time period) and updating the cumulative resource figures. This produces new wellhead costs and a new cycle begins.

3.2 USER CONTROLLED PARAMETERS

The model was written in LOTUS 1-2-3 in order to allow the user to understand and influence all aspects of the model. Although the user can change the model structure, most users will find that all necessary control over supply and demand for natural gas can be accomplished through parameter changes. For example, to control gas prices the user can change the ultimate resources of conventional and unconventional natural gas and the formula parameters (alpha, m, and n). (The user can also change the initial wellhead prices and the transportation costs between supply and demand regions of the model, but this is not recommended due to alignment considerations.) The user can change the parameters that determine the market competition between oil and gas, such as the world oil price and logit function parameters (rho and gamma). Demand for the total oil plus gas market can be controlled by varying the energy growth rates and conservation coefficients. A detailed discussion of input parameters is the subject of the next chapter. Information on how to make changes and recommendations regarding appropriate ranges for parameters are given in the user's guide, Appendix A.

4. MODEL INPUT

The purpose of this chapter is to present example inputs for a RAMSGAS scenario. Sensitivity of the various parameters and requirements for alignment will be discussed. The method for actually changing inputs is discussed in the RAMSGAS User's Guide, Appendix A of this report.

4.1 SCENARIO INPUTS

Each scenario run on RAMSGAS must have certain exogenous inputs entered into the model. The user should check these inputs thoroughly before running the model, and we recommend that all printouts of results should be accompanied by a listing of those assumptions. This section will present the input parameters one-by-one in the order which they appear on the input sheet of the model. Values shown are from the default scenario developed at ORNL.

The first parameters on the input sheet are the values of the oil price trajectory. These values can be obtained from the RAMSOIL model, or any other projection the analyst wishes to use. The units used are 1985 Dollars/MMBTU and the projections are assumed to be for crude oil. The model uses this oil price trajectory in determining oil vs. gas shares and in conservation of demand for oil plus gas. The figures in Table 6 are a typical projection.

Table 6. Oil Price Trajectory

RAMSOIL PRICE TRAJECTORY	YEAR	$/MMBTU	YEAR	$/MMBTU
	1980	4.60	2010	7.84
	1985	4.60	2015	8.97
	1990	4.89	2020	10.57
	1995	5.36	2025	12.28
	2000	5.99	2030	14.14
	2005	6.72		

The next parameters on the input sheet are the conventional resource wellhead cost parameters (see Table 7). These parameters control the rate of increase in wellhead costs as resources are consumed. The wellhead cost function has two terms. The parameter alpha, which can vary between 0 and 1, determines the mix between the two terms. The parameter, m, controls the slope of the first term. A small m gives a flatter slope and a slower change in prices than a larger one. The final parameter, n, controls the steepness of the second term. See Appendix B, Eq. (1), for precise specification of these parameters.

Table 7. Conventional Wellhead Cost Parameters

CONVENTIONAL RESOURCE PARAMETERS:	ALPHA:	0.33
	N:	1.00
	M:	0.00
	FLOOR:	0.70

The final parameter in Table 7 is called Floor. This parameter is used in determining the final delivered price of gas. The delivered price consists of final wellhead costs, plus transportation costs. This delivered price should not be lower than a certain percentage of the crude oil price due to the possible substitution between gas and oil. The floor parameter provides this minimum price. Since the oil price is for crude oil and the gas price is for delivered gas, the floor parameter could reasonably be set to more than 100%.

For all of the conventional resources, an initial wellhead cost in 1980 must be specified (see Table 8). These are alignment

parameters, and should not be changed except by a model expert. (See ALIGNMENT PARAMETERS, page 30.) 1980 values for the estimated ultimately recoverable resource and cumulative production up to 1980 must also be specified, but these may be changed without changing the alignment.

Table 8. Conventional Resources Specifications

	INITIAL WELLHEAD COST ($/MMBTU)	TOTAL RESOURCE (TCF)	1980 CUMULATIVE PRODUCTION (TCF)
US LOWER 48	2.60	1307.00	674.00
CANADA	2.00	516.00	74.00
ALASKA/CANADIAN ARCTIC	2.00	190.00	17.00
SOUTH AMERICA	1.50	538.00	81.00
WESTERN EUROPE	2.50	500.00	109.00
EASTERN EUROPE	1.00	2743.00	193.00
OCEANIA	1.50	200.00	10.00
ASIA	1.50	335.00	14.00
CHINA	1.50	265.00	6.00
AFRICA	1.00	444.00	24.00
MIDDLE EAST	1.00	1946.00	69.00

The unconventional resources differ slightly from the conventional ones in that their initial wellhead (or technology) costs must be specified in each period (see Table 9). Thus, the R&D planner has much more control over the price trajectory, enabling him or her to represent various cost reductions due to differing levels of R&D. The initial wellhead costs specified by the user are then increased according to cumulative production of the resource. Again the unconventionals are slightly different from the conventionals, in that the unconventional wellhead cost function has one term rather than two (only the second term in equation 1 of Appendix B is used). The cost function is controlled by the unconventional resources cost parameter, n, whose default value is 1.0.

Table 9. Unconventional Wellhead Costs

UNCONVENTIONAL RESOURCES COST PARAMETER: N = 1.00

INITIAL WELLHEAD (TECHNOLOGY) COSTS 1985 Dollars/Million BTU

NORTH AMERICAN:	1980	1985	1990	1995	2000
BLANKET TIGHT SANDS	30.00	30.00	25.00	20.00	16.00
LENTICULAR TIGHT SANDS	30.00	30.00	25.00	20.00	16.00
DEVONIAN SHALE	30.00	30.00	26.00	22.00	18.00
SURFACE COAL GASIFIC.	30.00	30.00	27.00	24.00	20.00
COAL BED METHANE	30.00	30.00	26.00	22.00	18.00
UNDERGND. COAL GASIFIC.	30.00	30.00	28.00	26.00	23.00
LOW BTU GAS	30.00	30.00	28.00	26.00	24.00
ALASKAN HYDRATES	30.00	30.00	29.00	27.00	25.00
ATLANTIC GAS HYDRATES	30.00	30.00	28.00	26.00	23.00
GEOPRESSURIZED	30.00	30.00	28.00	26.00	23.00
GENERIC 1	50.00	50.00	50.00	50.00	50.00
GENERIC 2	50.00	50.00	50.00	50.00	50.00
ASIAN TIGHT SANDS	30.00	30.00	25.00	20.00	16.00
ASIAN COAL GASIF.	30.00	30.00	27.00	24.00	20.00
ASIAN METHANE FROM COAL	30.00	30.00	26.00	23.00	19.00
ASIAN DEVONIAN SHALE	30.00	30.00	26.00	23.00	19.00
ASIAN GENERIC 1	50.00	50.00	50.00	50.00	50.00
ASIAN GENERIC 2	50.00	50.00	50.00	50.00	50.00
EUROPEAN GAS FROM COAL	30.00	30.00	26.00	23.00	19.00

NORTH AMERICAN:	2005	2010	2015	2020	2025	2030
BLANKET TGT SDS	12.00	9.00	7.00	7.00	7.00	7.00
LENTICULAR TGT SDS	12.00	9.00	7.00	7.00	7.00	7.00
DEVONIAN SHALE	14.00	11.00	9.00	9.00	9.00	9.00
SURFACE COAL GASIF.	17.00	14.00	12.00	12.00	12.00	12.00
COAL BED METHANE	14.00	11.00	9.00	9.00	9.00	9.00
UNDGND. COAL GASIF.	19.00	17.00	15.00	15.00	15.00	15.00
LOW BTU GAS	21.00	18.00	17.00	16.00	16.00	16.00
ALASKAN HYDRATES	23.00	21.00	20.00	20.00	20.00	20.00
ATL. GAS HYDRATES	19.00	17.00	15.00	15.00	15.00	15.00
GEOPRESSURIZED	19.00	17.00	15.00	15.00	15.00	15.00
GENERIC 1	50.00	50.00	50.00	50.00	50.00	50.00
GENERIC 2	50.00	50.00	50.00	50.00	50.00	50.00
TIGHT SANDS	12.00	9.00	7.00	7.00	7.00	7.00
COAL GASIFICATION	17.00	14.00	12.00	12.00	12.00	12.00
METHANE FROM COAL	15.00	12.00	10.00	10.00	10.00	10.00
DEVONIAN SHALE	14.00	12.00	11.00	11.00	11.00	11.00
GENERIC 1	50.00	50.00	50.00	50.00	50.00	50.00
GENERIC 2	50.00	50.00	50.00	50.00	50.00	50.00
EUR. GAS FROM COAL	14.00	12.00	11.00	11.00	11.00	11.00

At the far right-hand side when Table 9 is displayed on the screen, there is a place to specify the unconventional ultimate recoverable resources and cumulative production in 1980. (See Table 10.) For unconventional resources, cumulative production in 1980 will almost certainly be zero. The estimates of ultimately recoverable resources, however, will be one of the parameters that the R&D planner will want to vary to determine how much difference the quantity of the resource makes on its price path.

Table 10. Unconventional Resources Specifications

	TOTAL RESOURCE (TCF)	CUMULATIVE PRODUCTION (TCF IN 1980)
NORTH AMERICAN:		
BLANKET TIGHT SANDS	302.00	0.00
LENTICULAR TIGHT SANDS	302.00	0.00
DEVONIAN SHALE	50.00	0.00
SURFACE COAL GASIF.	1000.00	0.00
COAL BED METHANE	61.00	0.00
UNDGND. COAL GASIF.	600.00	0.00
LOW BTU GAS	302.00	0.00
ALASKAN HYDRATES	500.00	0.00
ATL. GAS HYDRATES	1000.00	0.00
GEOPRESSURIZED	1000.00	0.00
GENERIC 1	300.00	0.00
GENERIC 2	300.00	0.00
ASIAN:		
TIGHT SANDS	500.00	0.00
COAL GASIFICATION	500.00	0.00
METHANE FROM COAL	500.00	0.00
DEVONIAN SHALE	500.00	0.00
GENERIC 1	500.00	0.00
GENERIC 2	500.00	0.00
EUR. GAS FROM COAL	500.00	0.00

The next set of parameters on the input sheet are the oil and gas energy growth rates (see Table 11). These are defined as the expected annual growth in demand for oil plus gas, if the price were to remain constant. (The conservation due to higher prices is handled in a different term.) These rates are quite uncertain and the model is very sensitive to small changes in them. Therefore it is recommended that the user become familiar with the effects of changing these rates to develop a sense for a reasonable range. The default values were developed to compare the results of RAMSGAS with the published results of NEPP-85[9] (see reference 10).

Table 11. Energy Growth Rates (%/ Year)

OIL + GAS ENERGY GROWTH RATES:	81-85	86-90	91-95	96-00	01-05
NORTH AMERICA	-1.0%	1.4%	1.7%	2.1%	2.5%
WESTERN EUROPE	-1.5%	1.4%	1.7%	2.1%	2.5%
OCEANIA	-1.0%	1.4%	1.7%	2.1%	2.5%
SOUTH AMERICA	1.0%	1.5%	2.5%	3.5%	4.0%
AFRICA	2.0%	4.0%	5.5%	4.5%	4.0%
MIDDLE EAST	3.0%	4.0%	5.5%	4.5%	4.0%
ASIA	1.0%	2.5%	3.5%	4.5%	4.0%
EASTERN EUROPE	-1.0%	1.5%	2.0%	2.5%	2.5%
CHINA	1.0%	2.5%	3.5%	4.5%	4.0%

ENERGY GROWTH RATES CONTINUED...	06-10	11-15	16-20	21-25	26-30
NORTH AMERICA	2.0%	1.5%	1.0%	1.0%	1.0%
WESTERN EUROPE	2.0%	1.5%	1.0%	1.0%	1.0%
OCEANIA	2.0%	1.5%	1.0%	1.0%	1.0%
SOUTH AMERICA	4.0%	3.5%	3.0%	2.0%	1.0%
AFRICA	3.5%	3.0%	2.0%	1.5%	1.0%
MIDDLE EAST	3.5%	3.0%	2.0%	1.5%	1.0%
ASIA	3.5%	3.0%	2.0%	1.5%	1.0%
EASTERN EUROPE	2.0%	1.5%	1.0%	1.0%	1.0%
CHINA	3.5%	3.0%	2.0%	1.5%	1.0%

The next parameter on the model input sheet is the conservation coefficient (see Table 12). The conservation coefficient determines the amount of price-induced conservation in the demand estimate. A value of -1 implies a constant budget for oil and gas purchases. Values of -0.9 and -0.8 imply more difficulty in conserving oil and gas in response to an increase in price.

The gas share, rho, is the exponent in the logit function which determines how much of the total demand for oil and gas will be met by gas. A very negative value simulates great sensitivity to price differences between oil and gas. A less negative value implies less willingness to switch between fuels.

Table 12. Supply/Demand Coefficients

	CONSERVATION COEFFICIENT	GAS SHARE RHO	SUPPLIER GAMMA
NORTH AMERICA	-0.90	-1.50	-8.00
WEST EUROPE	-0.90	-1.50	-8.00
OCEANIA	-1.00	-1.50	-8.00
SOUTH AMERICA	-1.00	-1.50	-8.00
AFRICA	-0.90	-1.50	-8.00
MIDDLE EAST	-0.80	-1.50	-8.00
ASIA	-0.90	-1.50	-8.00
EASTERN EUROPE	-1.00	-1.50	-8.00
CHINA	-0.90	-1.50	-8.00

4.2 ALIGNMENT PARAMETERS

Alignment parameters are those parameters which affect the initial market shares in 1980. These parameters have been set in the default scenario such that the market shares agree with the 1980 data taken from EIA, Annual Energy Review.[5] These parameters should not be changed unless absolutely required, and only with consultation of a model expert.

As mentioned before, the initial wellhead costs for conventional gas are alignment parameters. Another such parameter is the supplier choice gamma. It is the exponent for the logit function that determines how much gas is purchased from each supplier. As with the fuel share rho, a very negative value simulates greater sensitivity to the differences in price between different suppliers. If either the gammas or the initial wellhead costs for conventional gas are changed, the model may backcast the wrong market shares for 1980. To realign the model, the transportation/distribution costs must be recalculated to produce the correct market shares for each region.

"Transportation costs" in this model reflect many other costs that would have been too complex to treat separately. Distribution, supplier markup, and transportation costs have been combined into one value representing the cost of getting gas from the wellhead of the supply region to the point of use. The calculation of these costs was done after choosing the supplier choice gamma of -8.00. Using data from EIA Annual Energy Review 1982, approximate market shares of gas to each demand region from each supply region were calculated. Then working backwards, the necessary delivered prices to produce those shares were calculated. Again, these values should not be changed without assessing the effect on historical market shares. The default scenario transportation costs (based on gammas of -8.00) are given in Table 13. Some of the values in Table 13 are unrealistically high. However, the high values were required to match the historical data.

Table 13. Transportation Costs ($/MMBTU)

TRANSPORTATION COSTS: (INCLUDING TRANSMISSION, DISTRIBUTION COSTS AND SUPPLIER MARKUP)

TO NORTH AMERICA:

US AVG	2.20
CANADA AVG	4.15
ALASKA TO NA	9.20
AFRICA LNG	8.40
CA/SA PIPELINE	7.70
CA/SA LNG	9.70
MIDDLE EAST LNG	8.40
ASIA LNG	9.70
NA UNCONVENTIONALS	2.20

TO OCEANIA:

OCEANIA AVG	5.90
ASIAN LNG	5.85
AFRICA LNG	12.00
MIDDLE EAST LNG	8.50
ALASKA LNG	8.40

TO ASIA:

ASIA AVG	7.20
EAST EUROPE	16.90
ASIA UNCONV	7.20

TO EAST EUROPE

EAST EUROPE AVG	3.50
MIDDLE EAST (PIPELINE)	8.00
ASIAN UNCONV	13.00

TO WEST EUROPE:

WEST EUROPE AVG	3.00
EAST EUROPE	6.10
AFRICA LNG	7.35
MIDDLE EAST LNG	9.60
EUR. GAS FROM COAL	3.00

TO SOUTH AMERICA:

AVERAGE FOR SA/CA	4.50
ASIAN LNG	14.00
AFRICA LNG	14.50
MIDDLE EAST LNG	14.50
US BLANKET T. S.	10.70

TO AFRICA:

AFRICA AVG	5.50
MIDDLE EAST AVG	14.40

TO MIDDLE EAST:

AFRICA AVG	13.30
MIDDLE EAST AVG	5.00

TO CHINA:

CHINA	6.00
EAST EUROPE	16.80
ASIAN LNG	16.30
ASIAN UNCONV	16.30

The final input parameters for the model are the levels of demand for oil and gas in 1980 in the various demand regions. They are located directly right of the transportation costs in the model input sheet. The numbers in the default scenario are presented in Table 14, and were aggregated from United Nations data by the Institute for Energy Analysis.[6]

Table 14. Historical Demand for Oil and Gas

HISTORICAL DEMAND IN 1980 (TCFE)		
	LIQUIDS	GAS
NORTH AMERICA	39.21	21.78
WESTERN EUROPE	28.53	8.61
OCEANIA	12.02	1.54
SOUTH AMERICA	10.28	2.30
AFRICA	3.01	0.75
MIDDLE EAST	4.02	1.32
ASIA	6.41	0.89
EASTERN EUROPE	22.80	16.42
CHINA	3.78	0.50

These numbers are the same as those given in Table 2. They should be changed only if region boundaries are redefined. The current assumptions on region boundaries are given in Table 15. If demand region boundaries are changed, they must be consistent with the other model parameters, such as historical demand and energy growth rates.

Table 15. Region Boundaries as Defined in Default Scenario

NORTH AMERICA

United States
Canada

WESTERN EUROPE

Austria
Belgium-Luxembourg
Czechoslovakia
Denmark
Finland
France
West Germany
Greece
Iceland
Ireland
Italy
Malta
Monaco
Netherlands
Norway
Portugal
Spain
Sweden
Switzerland
United Kingdom
Yugoslavia

OCEANIA

Australia
Fiji
French Polynesia
Japan
New Caledonia
New Zealand
Papua New Guinea
Samoa
Solomon Islands
Vanuatu
Tonga

CHINA

China
Korea, North
Mongolia
Vietnam

SOUTH AND CENTRAL AMERICA

Antigua
Argentina
Bahamas
Barbados
Belize
Bermuda
Bolivia
Brazil
Cayman Islands
Chile
Columbia
Costa Rica
Cuba
Dominican Republic
Ecuador
El Salvador
French Guiana
Guadeloupe
Guatemala
Guyana
Haiti
Honduras
Jamaica
Martinique
Mexico
Netherlands Antilles
Nicaragua
Panama
Paraguay
Peru
Surinam
Trinidad and Tobago
Uruguay
Venezuela
British Virgin Islands
U. S. Virgin Islands

EAST EUROPE

Albania
Bulgaria
East Germany
Hungary
Poland
Romania
USSR

Table 15. Continued

AFRICA

Algeria
Angola
Benin
Botswana
Burundi
Cameroon
Cape Verde
Central African Republic
Chad
Congo
Djibouti
Arab Republic of Egypt
Equatorial Guinea
Ethiopia
Gabon
Gambia
Ghana
Guinea
Guinea Bissau
Ivory Coast
Kenya
Liberia
Libya
Madagascar
Malawi
Mali
Mauritania
Morocco
Mozambique
Niger
Nigeria
Reunion
Rwanda
Sao Tome and Principe
Senegal
Sierra Leone
Somalia
South Africa
Sudan
Swaziland
Tanzania
Togo
Tunisia
Uganda
West Sahara
Upper Volta
Zaire
Zambia
Zimbabwe

MIDDLE EAST

Arab Emirates
Bahrain
Cyprus
Iran
Iraq
Israel
Jordan
Kuwait
Lebanon
Oman
Qatar
Saudi Arabia
Syria
Turkey
Democratic Yemen
Yemen

ASIA

Afghanistan
Bangladesh
Bhutan
Brunei
Burma
Hong Kong
India
Indonesia
Kampuchea Democratic
Korea, Republic of
Lao
Macao
Malaysia
Maldives
Nepal
Pakistan
Philippines
Singapore
Sri Lanka
Thailand
Taiwan
East Timar

5. MODEL OUTPUT

This chapter presents some of the results output by the RAMSGAS model. Three cases will be presented here: the RAMS default case, a high growth scenario and a low growth scenario.

5.1 RAMSGAS DEFAULT SCENARIO

The model has five summary sheets to facilitate viewing of results. These sheets are mostly self-explanatory, and are presented in Tables 16-20 for the default case parameters shown previously. (Some have been edited from 5-year to 10-year increments in this document for the purpose of easier presentation.) These summary sheets do not contain all the information in the model, but provide a source of easy comparison. Additional information can be obtained from looking at the model spreadsheet itself (see Appendix A).

5.2 RAMSGAS LOW AND HIGH GROWTH SCENARIOS

To illustrate the flexibility of RAMSGAS, two scenarios were developed to demonstrate RAMSGAS' ability to produce results much lower and higher than the projections made by the DOE Office of Policy, Planning, and Analysis in NEPP-85. All parameters are the same as in the default scenario except the world oil price trajectories and energy growth rates. The input parameters for the low and high growth scenarios are presented in Tables 21 and 22. Detailed results are given in the RAMS-NEPP comparison study (ORNL/TM-10159).[9] In this report, only the North American Summary Tables for each scenario will be presented. These are given in Tables 23 and 24.

Table 16. Demand Summary

DEMAND SUMMARY BY REGION (TCF EQUIV.)				Default Scenario		
	1980	1990	2000	2010	2020	2030
NORTH AMERICA						
LIQUIDS	39.21	37.96	37.75	36.28	30.38	24.53
GAS	21.78	20.62	22.05	24.01	24.44	26.34
WESTERN EUROPE						
LIQUIDS	28.53	26.73	26.37	25.07	20.70	17.37
GAS	8.61	8.37	9.80	12.01	14.07	12.91
OCEANIA						
LIQUIDS	12.02	11.47	11.10	10.32	8.40	6.88
GAS	1.54	1.60	2.07	2.83	3.47	3.13
SOUTH AMERICA						
LIQUIDS	10.28	10.88	11.67	12.79	12.81	11.16
GAS	2.30	2.65	3.76	5.92	7.30	6.08
AFRICA						
LIQUIDS	3.01	3.79	4.99	5.40	5.08	4.44
GAS	0.75	1.03	1.83	2.91	3.63	3.12
MIDDLE EAST						
LIQUIDS	4.02	5.33	7.07	7.71	7.58	6.82
GAS	1.32	1.92	3.44	5.59	6.31	5.57
ASIA						
LIQUIDS	6.41	7.17	8.63	9.47	8.90	7.47
GAS	0.89	1.09	1.75	2.75	3.77	4.35
EASTERN EUROPE						
LIQUIDS	22.80	21.72	21.26	19.89	16.80	13.77
GAS	16.42	17.00	22.09	23.58	19.17	16.52
CHINA						
LIQUIDS	3.78	4.23	5.10	5.61	5.26	4.56
GAS	0.50	0.61	1.00	1.62	2.34	2.11
WORLD DEMAND						
LIQUIDS	130.06	129.28	133.93	132.53	115.91	97.00
GAS	54.11	54.90	67.79	81.21	84.50	80.12
LIQUID+GAS TOTAL	184.17	184.18	201.72	213.74	200.40	177.11

Table 17. Production Summary

SUMMARY OF WORLD NATURAL GAS PRODUCTION (TCF)					Default Scenario	
	1980	1990	2000	2010	2020	2030
CONVENTIONAL SOURCES:						
US CONV	19.09	14.69	10.01	6.29	3.40	2.51
CANADA CONV	2.46	5.18	10.08	11.50	4.88	2.71
ALASKA/CAN. ARCTIC	0.21	0.14	0.26	0.55	0.98	2.37
WEST EUROPE CONV	7.09	6.60	6.53	5.41	3.23	3.61
OCEANIA	0.33	0.72	0.94	1.31	1.72	0.86
SA/CA	4.08	2.91	4.42	7.55	9.62	8.10
MIDDLE EAST	1.41	2.34	4.32	7.95	13.10	20.98
AFRICA	1.33	1.62	3.08	5.85	8.71	10.36
CHINA	0.47	0.61	0.99	1.62	2.33	2.08
ASIA	1.72	1.86	2.79	4.22	5.45	5.72
EASTERN EUROPE	17.28	18.27	24.43	28.01	23.96	11.88
UNCONVENTIONAL SOURCES:						
NA BLANKET T. S.		.00	.00	0.38	2.76	3.13
NA LENTICULAR T. S.		.00	.00	0.37	2.76	3.10
NA DEVONIAN SHALE		.00	.00	0.10	0.51	0.52
NA SURFACE COAL GAS		.00	.00	0.02	0.11	0.24
NA METHANE FROM COAL		.00	.00	0.10	0.77	1.64
NA ATL. GAS HYDRATES		.00	.00	0.01	0.02	0.05
NA GEOPRESSURIZED GAS		.00	.00	.00	0.02	0.03
NA ALASKAN HYDRATES		.00	.00	.00	.00	.01
NA LOW BTU GAS		.00	.00	.01	.02	.05
NA UNDERGRD. COAL GAS		.00	.00	.01	.02	.05
NA GENERIC 1		.00	.00	.00	.00	.00
NA GENERIC 2		.00	.00	.00	.00	.00
ASIAN TIGHT SANDS		.00	.00	0.02	0.12	0.25
ASIAN COAL GASIF.		.00	.00	.00	.01	.03
ASIAN COAL METHANE		.00	.00	.01	.03	.06
ASIAN DEVONIAN SHALE		.00	.00	.01	.02	.04
ASIAN GENERIC 1		.00	.00	.00	.00	.00
ASIAN GENERIC 2		.00	.00	.00	.00	.00
EUR. GAS FROM COAL		.00	.00	.02	.05	.22
TOTAL GAS PRODUCTION	55.47	54.95	67.85	81.31	84.63	80.61

Table 18. Price Summary

SUMMARY OF PROJECTED AVG COST OF GAS TO EACH REGION ($/MMBTU) (Default Scenario)	1990	2000	2010	2020	2030
NORTH AMERICA	5.83	6.80	8.20	9.70	10.71
WEST EUROPE	6.21	6.78	7.50	8.01	10.09
OCEANIA	7.66	7.73	7.84	8.04	10.09
SOUTH AMERICA	6.09	6.18	6.36	7.47	10.29
AFRICA	6.53	6.57	6.64	7.42	10.05
MIDDLE EAST	6.01	6.02	6.04	7.43	10.07
ASIA	8.79	8.88	9.13	9.56	10.35
EASTERN EUROPE	4.57	4.63	5.55	7.68	9.93
CHINA	7.54	7.57	7.62	7.72	10.04

To summarize, in the low growth scenario, the projected oil price grows at a slightly slower pace than in the default scenario, and the energy growth rates are smaller. Energy growth rates become zero by the year 2000 for all demand regions and remain at zero from then on. The results of this scenario show a long term trend of decreasing oil use in all regions, and slightly decreasing demand for gas in the OECD regions. Non-OECD Free World regions (Africa, Middle East, Asia, and Latin America) have a rapidly increasing gas use. Unconventional gas production begins at the same time as in the default scenario, but grows more slowly.

Table 19. Trade Summary

SUMMARY OF INTERNATIONAL GAS TRADE (TCF) (Default Scenario)

	1990	2000	2010	2020	2030
TO NORTH AMERICA:					
FROM SA/CA	0.22	0.47	0.95	1.39	1.95
FROM AFRICA	0.16	0.37	0.82	1.45	2.36
FROM MIDDLE EAST	0.16	0.37	0.86	1.60	2.44
FROM ASIA	0.04	0.08	0.18	0.29	0.49
TOTAL IMPORTED	0.59	1.29	2.81	4.72	7.24
TOTAL GAS DEMANDED	17.99	18.51	19.58	19.58	19.42
PERCENT IMPORTS:	3.3%	7.0%	14.3%	24.1%	37.3%
TO WESTERN EUROPE:	1990	2000	2010	2020	2030
FROM EAST EUROPE	1.24	2.13	3.92	6.45	3.02
FROM AFRICA	0.35	0.62	1.19	1.97	3.02
FROM MIDDLE EAST	0.05	0.10	0.19	0.35	1.62
TOTAL IMPORTED	1.65	2.85	5.30	8.77	7.66
TOTAL GAS DEMANDED	7.79	8.22	9.62	11.22	11.84
PERCENT IMPORTS:	21.2%	34.6%	55.1%	78.2%	64.7%
TO OCEANIA:	1990	2000	2010	2020	2030
FROM ASIA	0.68	0.83	1.04	1.19	0.79
FROM AFRICA	0.01	0.01	0.01	0.02	0.06
FROM MIDDLE EAST	0.09	0.12	0.17	0.25	0.79
FROM ALASKA	0.04	0.06	0.08	0.12	0.47
TOTAL IMPORTED	0.82	1.02	1.31	1.57	2.11
TOTAL GAS DEMANDED	1.48	1.86	2.45	3.09	2.90
PERCENT IMPORTS:	55.3%	54.7%	53.4%	51.0%	72.8%

Table 19. (Continued)

TO SOUTH AMERICA:	1990	2000	2010	2020	2030
FROM ASIA	.00	.00	.00	0.01	0.08
FROM AFRICA	.00	.00	.00	0.01	0.10
FROM MIDDLE EAST	.00	.00	.00	0.02	0.12
FROM US BLANKET T. S.	.00	.00	.00	0.01	0.03
TOTAL IMPORTED	.00	0.01	0.01	0.05	0.33
TOTAL GAS DEMANDED	2.71	3.97	5.53	6.00	4.93
PERCENT IMPORTS:	0.2%	0.2%	0.2%	0.8%	6.7%

TO ASIA:	1990	2000	2010	2020	2030
FROM EAST EUROPE	.00	0.01	0.01	0.01	0.02
TOTAL IMPORTED	.00	0.01	0.01	0.01	0.02
TOTAL GAS DEMANDED	1.15	1.81	2.52	3.15	3.48
PERCENT IMPORTS:	0.3%	0.3%	0.4%	0.4%	0.7%

TO EASTERN EUROPE:	1990	2000	2010	2020	2030
FROM MIDDLE EAST	0.07	0.09	0.36	2.48	6.10
FROM ASIAN UNCONV.	.00	.00	.00	0.01	0.04
TOTAL IMPORTED	0.07	0.09	0.36	2.49	6.13
TOTAL GAS DEMANDED	16.94	20.01	19.48	15.02	12.23
PERCENT IMPORTS:	0.4%	0.5%	1.8%	16.6%	50.2%

TO CHINA:	1990	2000	2010	2020	2030
FROM EAST EUROPE	.00	.00	.00	.00	0.02
FROM ASIA CONV	.00	.00	.00	.00	0.01
FROM ASIA UNCONV	.00	.00	.00	.00	.00
TOTAL IMPORTED	.00	.00	.00	0.01	0.03
TOTAL GAS DEMANDED	0.67	1.10	1.71	2.30	2.17
PERCENT IMPORTS:	0.2%	0.2%	0.2%	0.2%	1.5%

Table 20. North America Summary

NORTH AMERICAN DEMAND/PRODUCTION SUMMARY	(Default Scenario)				
	1990	2000	2010	2020	2030
CONVENTIONAL PRODUCTION (TCF):					
UNITED STATES	12.99	9.39	6.16	3.80	2.44
CANADA	4.36	7.73	9.83	6.43	2.44
ALASKA/ARCTIC	0.13	0.21	0.38	0.62	1.76
TOTAL CONVENTIONAL	17.49	17.33	16.37	10.85	6.64
UNCONVENTIONAL PRODUCTION (TCF):					
NA BLANKET T. S.	.00	.00	0.22	1.70	2.47
NA LENTICULAR T. S.	.00	.00	0.22	1.69	2.44
NA DEVONIAN SHALE	.00	.00	0.06	0.33	0.44
NA SURFACE COAL GAS	.00	.00	0.01	0.06	0.14
NA METHANE FROM COAL	.00	.00	0.06	0.41	0.91
NA GAS HYDRATES ATLANTIC	.00	.00	.00	0.01	0.03
NA GEOPRESSURIZED GAS	.00	.00	.00	0.01	0.02
NA ALASKAN HYDRATES	.00	.00	.00	.00	.00
NA LOW BTU GAS	.00	.00	.00	0.01	0.03
NA UNDERGROUND COAL GAS	.00	.00	.00	0.01	0.03
NA GENERIC 1	.00	.00	.00	.00	.00
NA GENERIC 2	.00	.00	.00	.00	.00
TOTAL UNCONVENTIONAL PROD.	.00	0.01	0.57	4.24	6.52
IMPORTS (TCF):					
FROM SA/CA	0.22	0.47	0.95	1.39	1.95
FROM AFRICA	0.16	0.37	0.82	1.45	2.36
FROM MIDDLE EAST	0.16	0.37	0.86	1.60	2.44
FROM ASIA	0.04	0.08	0.18	0.29	0.49
TOTAL IMPORTED	0.59	1.29	2.81	4.72	7.24
TOTAL NA DEMAND (TCF)	17.99	18.51	19.58	19.58	19.42

The high growth scenario has a quickly rising oil price trajectory, and sustained energy growth rates of 2.5% to 4.5% in all regions for the entire period 1985-2030. Results of this run indicate quickly increasing gas use in all regions, with oil use peaking in 2005 and declining some from then on. Unconventional gas production grows very rapidly in the later years and is more than double the amount of the default scenario in 2030.

Table 21. Changed Input Parameters for the Low Growth Scenario

RAMSOIL PRICE TRAJECTORY	YEAR	$/MMBTU	YEAR	$/MMBTU
(Low Growth Scenario)	1980	4.60	2010	7.40
	1985	4.60	2015	8.50
	1990	4.80	2020	9.70
	1995	5.20	2025	11.20
	2000	5.70	2030	13.00
	2005	6.40		

OIL + GAS ENERGY GROWTH RATE:	(Low Growth Scenario) 81-85	86-90	91-95	96-00	01-05
NORTH AMERICA	-1.0%	0.5%	0.8%	0.5%	0.0%
WESTERN EUROPE	-1.5%	0.5%	0.8%	0.5%	0.0%
OCEANIA	-1.5%	0.5%	0.8%	0.5%	0.0%
SOUTH AMERICA	1.0%	2.0%	3.0%	1.5%	0.0%
AFRICA	2.0%	3.0%	3.5%	1.5%	0.0%
MIDDLE EAST	3.0%	4.0%	3.0%	1.5%	0.0%
ASIA	1.0%	2.0%	3.0%	1.5%	0.0%
EASTERN EUROPE	-1.0%	0.5%	0.8%	0.5%	0.0%
CHINA	1.0%	2.0%	3.0%	1.5%	0.0%

(ALL GROWTH RATES ZERO FROM 2000 TO 2030.)

Table 22. Changed Input Parameters for the High Growth Scenario

RAMSOIL PRICE TRAJECTORY	YEAR	$/MMBTU	YEAR	$/MMBTU
(High Growth Scenario)	1980	4.60	2010	8.00
	1985	4.70	2015	9.20
	1990	5.00	2020	10.80
	1995	5.50	2025	12.70
	2000	6.10	2030	14.70
	2005	6.85		

OIL + GAS ENERGY GROWTH RATE:	(High Growth Scenario) 81-85	86-90	91-95	96-00	01-05
NORTH AMERICA	-1.0%	2.5%	2.5%	2.5%	2.5%
WESTERN EUROPE	-1.0%	2.5%	2.5%	2.5%	2.5%
OCEANIA	-1.0%	2.5%	2.5%	2.5%	2.5%
SOUTH AMERICA	1.0%	3.5%	3.5%	3.5%	3.5%
AFRICA	2.0%	4.5%	4.5%	4.5%	4.5%
MIDDLE EAST	3.0%	4.5%	4.5%	4.5%	4.5%
ASIA	1.0%	3.5%	3.5%	3.5%	3.5%
EASTERN EUROPE	-1.0%	2.5%	2.5%	2.5%	2.5%
CHINA	1.0%	3.5%	3.5%	3.5%	3.5%

(ALL GROWTH RATES THE SAME FROM 2000 TO 2030.)

Table 23. Low Growth Scenario North American Summary

NORTH AMERICAN DEMAND/PRODUCTION SUMMARY				Low Growth Scenario		
	1980	1990	2000	2010	2020	2030
CONVENTIONAL PRODUCTION (TCF):						
UNITED STATES	19.09	13.96	8.82	5.16	3.10	2.36
CANADA	2.46	4.92	8.19	8.49	5.29	2.75
ALASKA/ARCTIC	0.21	0.14	0.21	0.32	0.44	0.86
TOTAL CONVENTIONAL	21.76	19.01	17.22	13.96	8.83	5.97
UNCONVENTIONAL PRODUCTION (TCF):						
NA BLANKET TIGHT SANDS		.00	.00	0.20	1.31	1.64
NA LENTICULAR TIGHT SANDS		.00	.00	0.20	1.31	1.63
NA DEVONIAN SHALE		.00	.00	0.05	0.26	0.30
NA SURFACE COAL GAS		.00	.00	0.01	0.05	0.08
NA METHANE FROM COAL		.00	.00	0.05	0.31	0.52
NA GAS HYDRATES ATLANTIC		.00	.00	.00	0.01	0.02
NA GEOPRESSURIZED GAS		.00	.00	.00	0.01	0.01
NA ALASKAN HYDRATES		.00	.00	.00	.00	.00
NA LOW BTU GAS		.00	.00	.00	0.01	0.02
NA UNDERGROUND COAL GAS		.00	.00	.00	0.01	0.02
NA GENERIC 1		.00	.00	.00	.00	.00
NA GENERIC 2		.00	.00	.00	.00	.00
TOTAL UNCONVENTIONAL PROD.		.00	0.01	0.53	3.28	4.23
IMPORTS (TCF):						
FROM SA/CA	0.10	0.25	0.52	0.91	1.19	1.60
FROM AFRICA	0.09	0.19	0.41	0.77	1.13	1.64
FROM MIDDLE EAST		0.19	0.41	0.80	1.22	2.00
FROM ASIA		0.04	0.09	0.17	0.24	0.36
TOTAL IMPORTED	0.19	0.67	1.44	2.64	3.78	5.59
TOTAL N.A. DEMAND		19.59	18.56	17.01	15.75	15.41

Table 24. High Growth Scenario North American Summary

NORTH AMERICAN DEMAND/PRODUCTION SUMMARY				High Growth Scenario		
	1980	1990	2000	2010	2020	2030
CONVENTIONAL PRODUCTION (TCF):						
UNITED STATES	19.09	15.51	10.49	6.38	3.50	3.01
CANADA	2.46	5.47	11.51	11.89	4.45	2.86
ALASKA/ARCTIC	0.21	0.15	0.31	0.73	1.47	4.77
TOTAL CONVENTIONAL	21.76	21.13	22.31	19.00	9.41	10.65
UNCONVENTIONAL PRODUCTION (TCF):						
NA BLANKET TIGHT SANDS		.00	.00	0.49	3.72	4.51
NA LENTICULAR TIGHT SANDS		.00	.00	0.49	3.72	4.48
NA DEVONIAN SHALE		.00	.00	0.13	0.67	0.72
NA SURFACE COAL GAS		.00	.00	0.03	0.17	0.50
NA METHANE FROM COAL		.00	.00	0.13	1.15	3.41
NA GAS HYDRATES ATLANTIC		.00	.00	0.01	0.04	0.11
NA GEOPRESSURIZED GAS		.00	.00	.00	0.02	0.07
NA ALASKAN HYDRATES		.00	.00	.00	.00	0.01
NA LOW BTU GAS		.00	.00	0.01	0.04	0.11
NA UNDERGROUND COAL GAS		.00	.00	0.01	0.04	0.11
NA GENERIC 1		.00	.00	.00	.00	.00
NA GENERIC 2		.00	.00	.00	.00	.00
TOTAL UNCONVENTIONAL PROD.		.00	0.01	1.30	9.56	14.03
IMPORTS (TCF):						
FROM SA/CA	0.10	0.28	0.78	2.09	3.13	2.79
FROM AFRICA	0.09	0.21	0.61	1.86	3.85	4.17
FROM MIDDLE EAST		0.21	0.62	1.95	4.35	6.72
FROM ASIA		0.05	0.14	0.40	0.75	1.24
TOTAL IMPORTED	0.19	0.74	2.15	6.30	12.08	14.92
TOTAL N.A. DEMAND (TCF)		21.77	24.31	26.35	30.61	37.44

References

1. L. D. Trowbridge, D. B. Reister, P. E. Mihlmester, J. V. Conopask, and E. Hicks, "The Nonconventional Liquid Fuels Research and Development Analysis Modeling System (RAMSOIL 3.0): A Microcomputer-Based World Oil Market Model," Two Volumes, Applied Management Sciences, Inc., Silver Spring, Maryland, (1986).

2. Private communication from C. D. Masters USGS to D. B. Reister, (1985).

3. C. D. Masters, D. H. Root, and W. D. Dietzman, "Distribution and Quantative Assessment of World Crude-Oil Reserves and Resources," Open-File Report 83-728, U. S. Geological Survey, Reston, Virginia (1983).

4. J. F. Bookout et al., "Unconventional Gas Sources," Five Volumes, National Petroleum Council, Washington, D. C. (1980).

5. K. E. Seiferlein et al., "1982 Annual Energy Review," DOE/EIA-0384 (82), Energy Information Administration, Washington, D. C. (1983).

6. Private Communication from R. M. Rotty IEA/ORAU to D. B. Reister (1985).

7. P. J. Werbos, "Documentation of the PURHAPS Industrial Demand Model," Three Volumes, DOE/EIA-0420, Energy Information Administration, Washington, D. C. (1984).

8. D. B. Reister, R. W. Barnes, and J. A. Edmonds, "The Oak Ridge Industrial Model," Three Volumes, ORNL/CON-56, Oak Ridge National Laboratory, Oak Ridge, Tennessee (1982).

9. A. Haynes et al., "National Energy Policy Plan Projections to 2010," DOE/PE-0029/3, U. S. Department of Energy, Washington, D.C. (1985).

10. E. A. Browne, D. B. Reister, and L. D. Trowbridge, "A Comparison Study of the RAMSGAS Model and the National Energy Policy Plan Projections to 2010," ORNL/TM-10159, Oak Ridge National Laboratory, Oak Ridge, Tennessee (1986).

APPENDIX A: RAMSGAS USER'S GUIDE

PURPOSE OF THE USER'S GUIDE

The purpose of this user's guide is to provide an introduction to the RAMS World Gas Model (RAMSGAS). After a brief introduction to the model, most users will prefer to browse through the spreadsheet to discover for themselves how to use RAMSGAS.

This guide begins by presenting an introduction to the reasons for development of the model. The next section qualitatively discusses the model structure. The model components are discussed and explored from the directory menu to assist users in visualizing where they are at any point on the spreadsheet. In the next sections, the user is given the basic operating instructions, including moving around in the model, running the model, changing parameters, and creating output. The last section of this guide describes automated printing, graphics and scenario saving capabilities.

INTRODUCTION

The RAMSGAS model is a LOTUS 1-2-3 spreadsheet model of world natural gas supply and demand. RAMSGAS was developed to assist analysts from the U.S. Department of Energy, Office of Advanced Fuels, Technology, Extraction, and Environmental Control (AFTEEC) in the planning of R&D investments for unconventional natural gas resources. RAMSGAS's spreadsheet framework allows easy variation of assumptions for wide ranging scenario assessment. This user's guide provides quick access to the information required to run RAMSGAS; more detailed information about the model is given in the main body of this report. The analyst desiring an understanding of the theory and the mechanics of the RAMSGAS design is urged to read Appendix B of this report.

The model is a LOTUS 1-2-3 worksheet and uses the LOTUS cell equations as the "modeling language." The model is written under LOTUS 1-2-3 version 1A, but is compatible with version 2. All users should have some basic understanding of LOTUS, especially the use of the function keys and the LOTUS menus. If the user is unfamiliar with LOTUS, the LOTUS tutorial is recommended.

MODEL STRUCTURE

The RAMSGAS model contains data on world natural gas supply, demand estimates, and a framework for incorporating unconventional gas resources in future natural gas production. This section provides a qualitative introduction to the logic of the model. A structural flow diagram is presented in Fig. A-1. A mathematical description is given in Appendix B.

Wellhead Price

Both conventional and unconventional gas are described by a supply function that relates the wellhead price to the cumulative production of gas. The model contains 11 supply regions for conventional natural gas, and 19 sources of unconventional gas in 3 regions, for a total of 30 supply nodes. Initial wellhead prices must be specified by the user (or left at default values) for all regions and technologies in 1980. Initial unconventional technology costs are specified by the user in each 5-year period through the year 2030, allowing the initial costs of unconventional gas to fall as more R&D is done. For both conventional and unconventional gas, the final wellhead prices will be increased from their initial value according to the cumulative production of that resource.

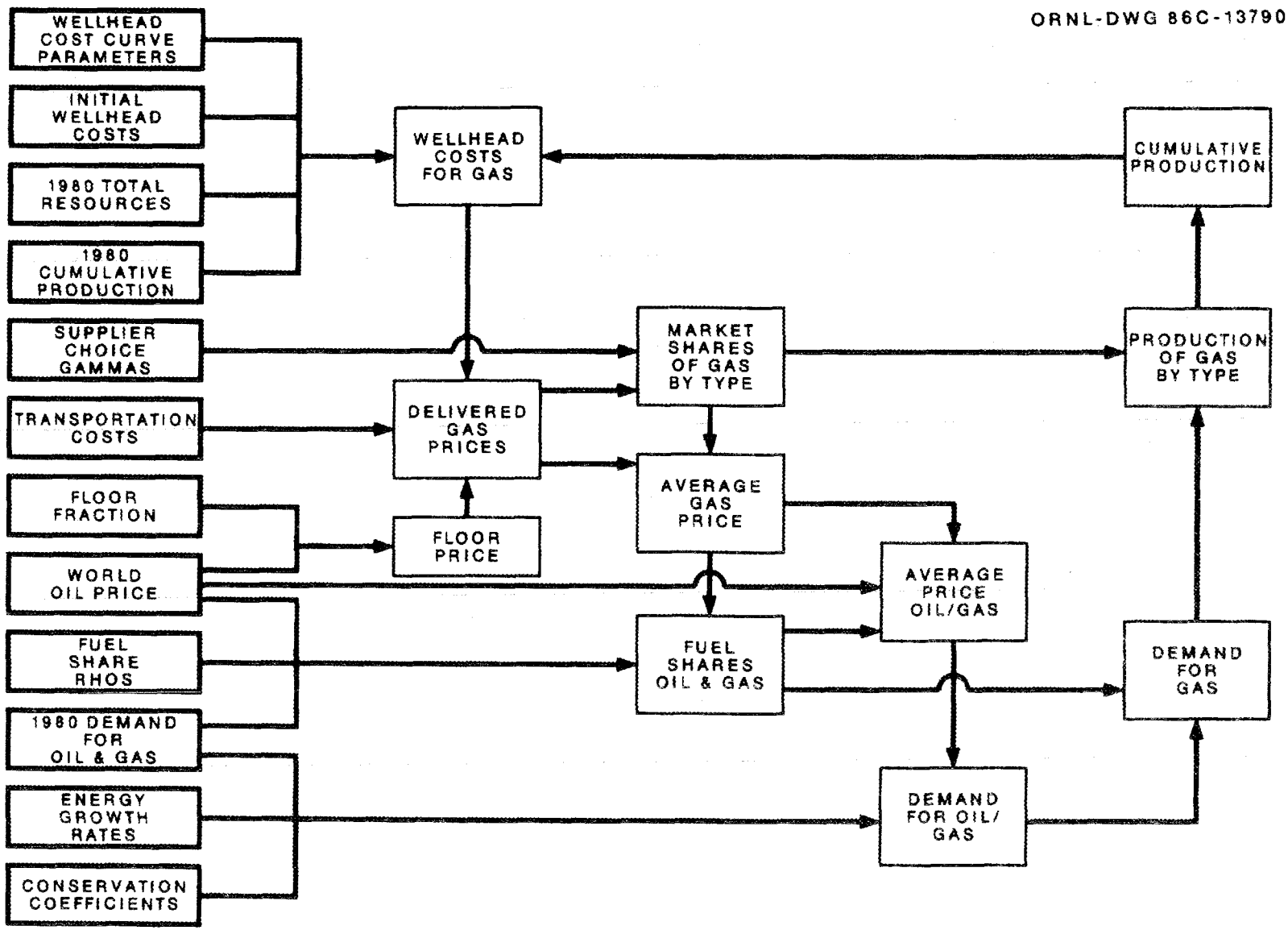

Fig. A-1. Structural Flow Diagram

Delivered Price

To be utilized, gas must be transported from the supply regions to the demand regions. For contiguous regions, transport would probably be by pipeline; for noncontiguous regions, transport would be by LNG tanker. For each demand region, the delivered price is the sum of the wellhead price and the transportation costs, which include transmission and distribution costs and supplier profit. If gas costs are low relative to oil, a producer has incentive to raise the price of his gas until he begins to lose market share. To simulate this effect, the delivered price is never allowed to be less than a specified fraction of the world oil price.

Demand for Gas

For each of the nine demand regions, the total demand for the sum of oil and gas is calculated from the previous period's demand, growth in energy demand for oil plus gas, and the price-driven conservation. This total demand is allocated between natural gas and oil, depending on the regional average natural gas price and the world oil price, and based upon the gas and oil shares in the base year (1980).

Shares of the Market

Each demand region can obtain gas from more than one supply region. The share of demand given to each supplier is inversely proportional to the delivered price of gas from that supplier.

Supply Region Production

The production of each supply region depends on the orders from each demand region. These orders are derived from the market shares for each supplier in each demand region and the total gas demand in that region.

Total Production

After producing gas for five years, each region updates its cumulative production and calculates a new value for its wellhead price. New demand is also calculated, and the model goes through another cycle.

ORGANIZATION OF THE MODEL

The first screen that the user will see after loading the model is presented in Fig. A-2. This first screen helps the user locate the model directory, and automated printing, graphics, and scenario capabilities. This first screen can be returned to from anywhere in the model by pressing the HOME key.

WELCOME TO THE RAMSGAS R & D PLANNING MODEL. THIS INTRODUCTORY SECTION PRESENTS AN EASILY USED GUIDE TO THE VARIOUS MODULES OF THE MODEL. LISTED BELOW IS A MENU OF THE MODEL'S MAJOR MODULES.

MODULE	INSTUCTIONS
MODEL DIRECTORY	PAGE DOWN
PRINT MENU	HIT {Alt} AND THEN P
GRAPHICS MENU	HIT {Alt} AND THEN G
SCENARIO ARCHIVE	HIT {Alt} AND THEN S

Fig. A-2. Welcome Menu

The model directory can be accessed from the first screen by paging down (using the PgDn key) or by typing GOTO (the F5 key) and DIR. The directory is presented in Fig. A-3. The user can move to any of the sections listed in this directory by typing GOTO and the name of the range. For example, if the user wished to see the North

THIS IS THE RANGE DIRECTORY. THIS LISTS THE NAMES OF THE RANGE OF SOME OF THE MAJOR SECTIONS OF THE MODEL. TO GO TO A RANGE HIT THE GOTO KEY (F5) FOLLOWED BY THE NAME OF THE RANGE.
(Hit PgDn to see rest of directory)

RANGE	NAME
INPUT PARAMETERS SHEET	INPUT
THIS DIRECTORY	DIR
CONV. WELLHEAD COSTS	CWC
UNCONVENTIONAL COSTS	UWC
NORTH AMERICA	NA
WESTERN EUROPE	WESTEUR
OCEANIA	OCEAN
S. AND C. AMERICA	SA/CA
ASIA	ASIA
AFRICA	AFRICA
MIDDLE EAST	ME
EASTERN EUROPE	EASTEUR
CHINA	CHINA
OIL PRICE	OIL
DEMAND	DEMAND
NORTH AMERICA SUMMARY	SUMNA
WORLD PRODUCTION SUMMARY	PROD
WORLD TRADE SUMMARY	TRADE
WORLD PRICES SUMMARY	PRICES
TRANSPORTATION COSTS	TRANS
ENERGY GROWTH RATES	RATES

Fig. A-3. Range Directory Menu

American supply/demand sector, he or she would press the F5 key, type NA, and hit the Return key. To return to the first screen, the user could press the HOME key.

A schematic outline of the RAMSGAS model is presented in Fig. A-4. This figure identifies the order and general location of each section of the worksheet.

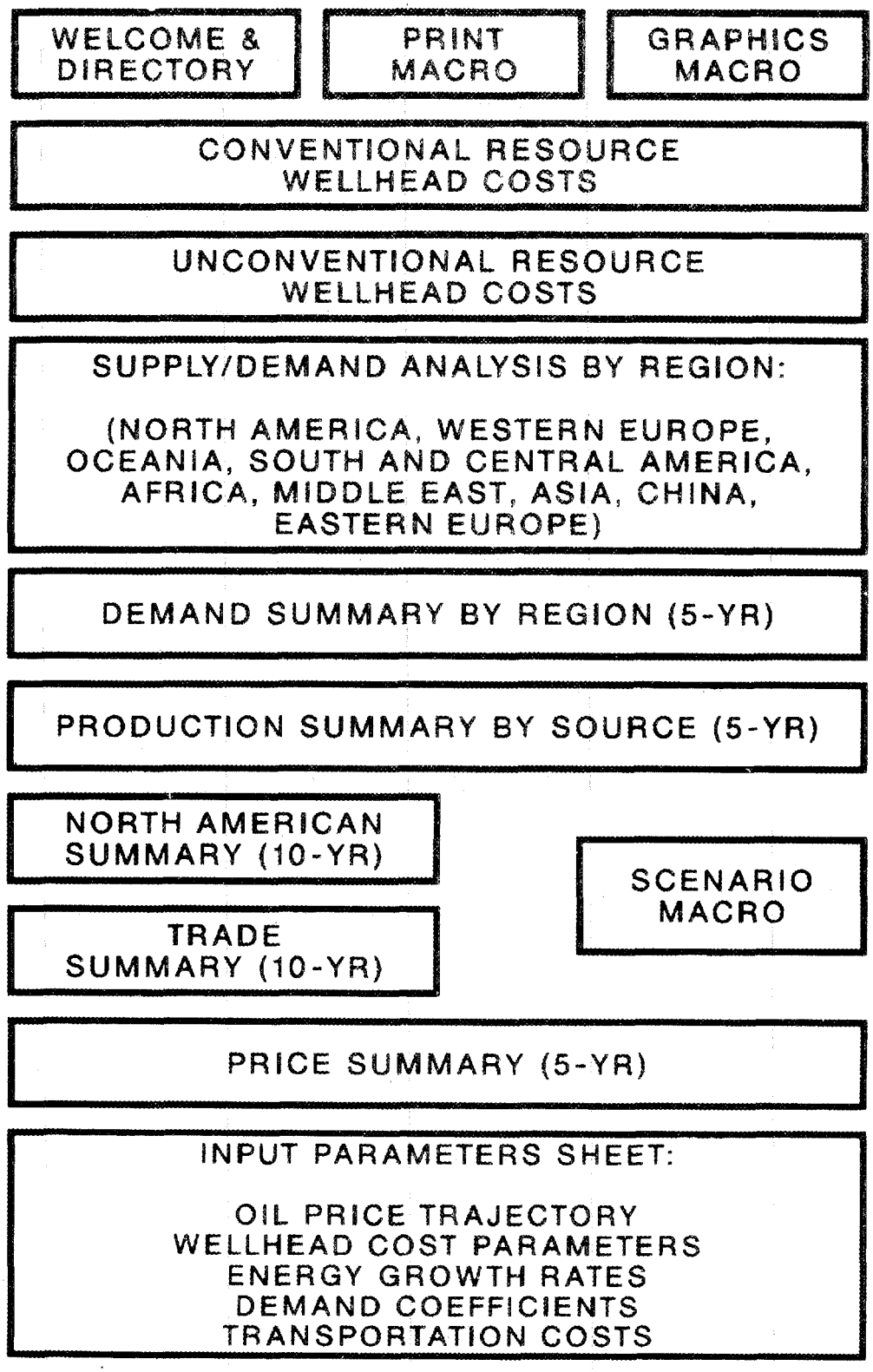

Fig. A-4. RAMSGAS Schematic

Paging down from the model directory (range name DIR), the user can examine the existing wellhead cost parameters and resources for the conventional resources. This section of the model can also be accessed by typing GOTO and CWC. The screen that the user would then see is shown below in Fig. A-5 (the parameters in Fig. A-5 were discussed in Chapter Four). Like most of the tables in the model, the conventional resources table extends beyond the limits of a single screen. The arrow keys, PgDn, PgUp, and Tab keys allow the user to move to other parts of the table.

CONVENTIONAL RESOURCES

COST PARAMETERS:	ALPHA:	0.33	N:	1.00
	FLOOR:	0.7	M:	0.00

PRICE AT THE WELLHEAD	1980	1985	1990	1995	2000
UNITS: RESOURCES AND PRODUCTION IN TCF, COST IN $/MMBTU					
US LOWER 48					
TOTAL RESOURCE	1307.00				
CUMULATIVE PRODUCTION	674.00	769.45	841.03	898.89	949.70
WELLHEAD COST	2.60	2.91	3.22	3.56	3.94
CANADA					
TOTAL RESOURCE	516.00				
CUMULATIVE PRODUCTION	74.00	86.30	101.76	120.63	145.19
WELLHEAD COST	2.00	2.04	2.09	2.16	2.26

Fig. A-5. Conventional Wellhead Costs Example

The next section the user may wish to examine is the unconventional resource sector. This is accessed by GOTO UWC. The screen the user will see is presented in Fig. A-6.

UNCONVENTIONAL RESOURCES
COST PARAMETER: N = 1.00

	1980	1985	1990	1995	2000
UNITS: RESOURCES AND PRODUCTION IN TCF, COSTS IN $/MMBTU					
A. NORTH AMERICAN UNCONVENTIONAL RESOURCES					
NORTH AMERICA BLANKET TIGHT SANDS					
INITIAL COST	30.00	30.00	25.00	20.00	16.00
TOTAL RESOURCE	302.00				
CUMULATIVE PRODUCTION	0.00	0.00	.00	.00	.00
WELLHEAD COST	30.00	30.00	25.00	20.00	16.00
NORTH AMERICA LENTICULAR TIGHT SANDS					
INITIAL COST	30.00	30.00	25.00	20.00	16.00
TOTAL RESOURCE	302.00				
CUMULATIVE PRODUCTION	0.00	0.00	.00	.00	.00
WELLHEAD COST	30.00	30.00	25.00	20.00	16.00

Fig. A-6. Unconventional Wellhead Costs Example

As mentioned previously, the major difference between conventional and unconventional gas sources in the model is that the unconventional inital wellhead (technology) costs must be specified in <u>each</u> time period. The user can change the cost parameters, initial wellhead costs, initial cumulative production, and total resource numbers for each of the resources. The method for making these and other changes is discussed in Section 6 of this user's guide.

Other parts of the model are also accessed by typing GOTO and the name given in the range directory. There are Supply/Demand sectors for each of the nine demand regions and five summary tables available. Please note that there are two pages of the range directory.

Three automated routines, or macros, are provided within RAMSGAS. The print macro is accessed by holding down the ALT key and typing the letter P simultaneously. This macro allows the user to automatically print the summary tables or input sheet of the model. The graphics menu allows the user to view graphs of several of the model's key outputs. This macro is accessed by pressing the ALT key and G. The scenario macro allows the user to save and retrieve the input parameters of any scenario run they may have created. The scenario macro is accessed by pressing ALT and S. These macros are discussed in more detail later in this report.

EXECUTING THE MODEL

Upon the retrieval of the LOTUS file, RAMSGAS.WKS, the RAMSGAS welcome screen should be presented. (If it is not, press the HOME key.) At this point, the user should make a backup diskette of RAMSGAS using the LOTUS file save command. This will preserve the original model, including data and parameters, in case anything happens to the working copy of the model. (It is recommended that any new copy of the spreadsheet be write-protected. This can be done from DOS using the command "ATTRIB +R RAMSGAS.WKS". This will prevent accidental erasure or replacement of the worksheet.)

As received by the user, RAMSGAS is ready to be run immediately upon retrieval as a LOTUS file. (See the LOTUS 1-2-3 manual for the file retrieval sequence). The simulation solution from the last saving of the entire model will occupy the summary and supporting tables. The user is advised to recall the desired scenario (or create a new one) and execute the model again before using any results.

Execution of the model is accomplished by pressing CALC (the F9 key). Once this key is pressed, it will take about a minute for the model to calculate (depending on the computer and the LOTUS version), after which the user can view the results.

CHANGING PARAMETERS

All of the parameters that are intended to be changed by the user (i.e. not calculated by model equations) are found in the range called the Input Parameters Sheet (INPUT). For a scenario to run, the us must specify all of the values on this sheet. The parameters were defined and discussed in Chapter Four. To change a value, position the cursor over the cell using the arrow keys, and type the new value. When you press the Return key, the new value will be entered into that cell. Before making any changes, please check to see that you have made a backup of the original model as suggested in Section 5. The original RAMSGAS.WKS file has LOTUS write-protection on all cells that do not contain user-controlled parameters, to prevent changes to model format or equations.

MODEL OUTPUT

The user can view model results in three ways: the first is to directly view the spreadsheet, the second is to print tabular results, and the third is to use the LOTUS graphics to display output. Both printing and graphics can be done manually or by using built-in RAMSGAS macros. Any part of the model could be viewed as output, but the information summaries listed in Fig. A-7 were considered especially useful. These tables can be located by typing the GOTO key and their name.

Name	Summary Description
DEMAND	Oil & Gas Demand by Region
PROD	Gas Production by Source
TRADE	International Trade (10-yr)
PRICES	Regional Delivered Gas Prices
SUMNA	North America Summary (10-yr)

Fig. A-7. Table of Summaries

MODEL MACROS

The Print Macro

The print macro can be used to automatically print the summary tables or input sheet of RAMSGAS. The print macro is called by pressing ALT and P. The menu in Fig. A-8 will then appear.

THIS IS THE PRINT MENU. SELECT THE TABLE YOU WISH
TO PRINT BY USING THE CURSOR.

OPTION	DESCRIPTION
PRODUCTION	WORLD GAS PRODUCTION
TRADE	INTERNATIONAL TRADE
DEMAND	WORLD OIL AND GAS DEMAND
PRICE	WORLD AVERAGE DELIVERED GAS COSTS
N AMER	NORTH AMERICA SUPPLY
PARAMETERS	MODEL INPUT PARAMETER LISTING
EXIT	EXIT PRINT MENU

Fig. A-8. Print Menu

The user can select the desired option by using the left and right arrow keys to control the cursor in the upper left corner of the screen. The selection of QUIT brings the user back to the model's opening screen. If the user selects PRICE (the delivered gas costs summary table), the print macro would then automatically print that summary table. When the macro finishes printing, the user is returned to the print macro. The option DEMAND will print the demand summary table. These tables will be output in normal or compressed print depending on the width of the table. The model is set up for EPSON-compatible printers, and contains a setup sequence for both compressed and normal printing in ranges named COMPRESS and NORMAL. If difficulty occurs using another model printer, the user should consult his printer user's guide to check the required setup string for compressed print, and the LOTUS manual under Print-Options-Setups for directions in implementing the necessary change. The compressed and normal-width codes used in the model are contained in the cells named COMPRESS and NORMAL.

The Graphics Macro

The graphics macro can be used to view some of the main model outputs graphically. This macro is invoked by typing ALT and G. Figure A-9 shows the menu that will then appear.

The user can move the cursor to select the desired graph. If, for example, the user selects DEMAND, the graph shown in Fig. A-10 would appear on the screen, with the numbers currently in the model. This macro is set up for a color monitor. If the model is run with a black and white monitor, consult the LOTUS manual section under

THIS IS THE GRAPHICS MENU. SELECT THE GRAPH YOU WISH TO SEE BY USING THE CURSOR. TO RETURN TO THIS MENU, PUSH ANY KEY.

GRAPH	DESCRIPTION	
*****	**********	
PRODUCTION	World Gas Production	(major suppliers)
COSTS	Wellhead Costs	(major suppliers)
DEMAND	World Gas and Oil Demand	
NA PROD	North American Production	(by source)
NA PRICE	North American Gas Prices	(by supply source)

Fig. A-9. Graphics Menu

ORNL-DWG 86C-13789

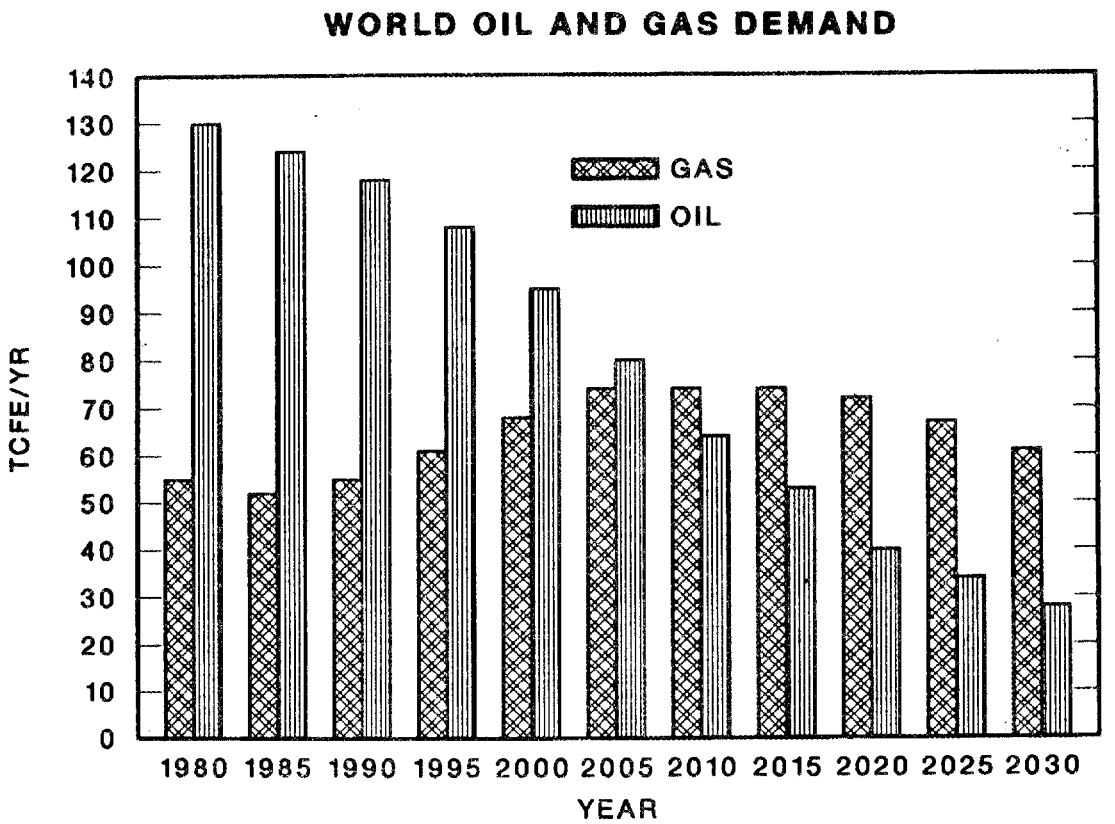

Fig. A-10. Sample Graph

Graphics-Options and Graphics-Name to make necessary changes. Once a graph has been selected and appears on the screen, the user must press the Spacebar to return to the graphics menu. To exit this menu, select QUIT.

The Scenario Macro

The RAMSGAS model has a built-in macro to store and retrieve the input parameters from any scenario the user creates. This macro is invoked by typing ALT and S; the menu presented in Fig. A-11 will appear on the screen.

Scenarios are saved by preserving a section of the model containing all the input parameters needed to recreate a scenario.

WARNINGS:

1. It is possible to overwrite (and thus destroy) an existing spreadsheet file by using duplicate names.
2. When retrieving, make sure the file name you give is indeed a scenario file, or the model will likely be scrambled and require reloading.
3. Recalculate (F9 or "CALCULATE" menu selection) after retrieving.

OPTION	DESCRIPTION
EXIT	Leave Scenario Menu
SAVE	Save Scenario input parameters
RETRIEVE	Retrieve Scenario parameters
CALCULATE	Recalculate model

Fig. A-11. Scenario Menu

If SAVE is selected, the user will be asked for a title for the scenario and for a filename for the scenario. It is generally wise to use the same name for both. The user should be careful not to select

a filename that is already in use on his disk; if an existing name is chosen, the file will be overwritten. After the file is saved, the user is returned to the scenario macro.

The macro will save all of the input parameters necessary to duplicate the run. In the future, a user can recall this file using the scenario save macro command RETRIEVE, and recreate the results as they were before. This procedure saves space because it isn't necessary to save the whole model for each scenario.

APPENDIX B: MODEL EQUATIONS DISCUSSION

Model Specification

This appendix will provide a mathematical description of the model. The mathematical functions have been chosen to produce a wide range of scenarios by adjustment of parameters. Most of the parameters can be varied without changing the base year forecast (see Chapter 4). The default values for the parameters were determined by judgment and numerical experiments.

In the model, the wellhead price of gas (PW) depends on the cumulative production of gas (Q), that is

$$PW = PW_o * \left(\alpha \, (Q/Q_o)^m + (1 - \alpha) \left[\frac{Q^* - Q_o}{Q^* - Q} \right]^n \right) \qquad (1)$$

where Q_o and PW_o are the initial values of Q and PW in 1980, Q^* is the ultimately recoverable resource in 1980, and α, m, and n are parameters. When $\alpha = 1.0$, the parameter m controls the rate of increase of the price of fuel. When m is small, the fuel price increases slowly as a function of Q. When m is large, the price increases more rapidly. Current values for the parameters are $\alpha = 0.33$, $m = 0$, and $n = 1$. For the unconventional sources, the first term is removed ($\alpha = 0$) because Q_o is approximately zero, and the PW_o term is specified in each time period. This increases the flexibility of future price paths for unconventional technologies.

Let supply regions be denoted by I and demand regions by J. Then PW(I) is the wellhead price in supply region I. Let TG(I,J) be the transportation and distribution costs from the wellhead of supplier I to the demand region J. The delivered cost of gas, PD(I,J), from region I to region J is the sum of the wellhead costs and the transportation costs, but never less than a user-specified fraction (F) of the world oil price (PO), that is

$$PD(I,J) = MAX\left(PW(I) + TG(I,J)\ ,\ (F * PO)\right) \qquad (2)$$

This formulation prevents delivered gas prices from falling far below oil prices; the current value of F is 70%.

Given the cost of gas from each local supply region, the demand regions allocate their gas purchases using a logit function, that is

$$SG(I,J) = \frac{PD(I,J)^{\gamma}}{\sum_{I} PD(I,J)^{\gamma}} \qquad (3)$$

where SG(I,J) is the share of the total gas purchased by demand region J that will be bought from supplier I and γ is a parameter. The default value for γ is -8.0.

Given the shares from each source, the demand regions can calculate the average price of gas, PG(J), that is

$$PG(J) = \sum_{I} PD(I,J) * SG(I,J) \qquad (4)$$

Given this regional average gas price, PG(J), the world oil price, PO, and the shares of gas and oil in 1980, SG_o and SO_o, the demand regions allocate purchases between oil and gas using a logit function, that is

$$FSG(J) = \frac{SG_o \left(PG(J)/PG_o(J)\right)^{\rho}}{SG_o \left(PG(J)/PG_o(J)\right)^{\rho} + SO_o \left(PO/PO_o\right)^{\rho}} \qquad (5)$$

$$FSO(J) = \frac{SO_o \left(PO/PO_o\right)^{\rho}}{SG_o \left(PG(J)/PG_o(J)\right)^{\rho} + SO_o \left(PO/PO_o\right)^{\rho}} \qquad (6)$$

where FSG(J) and FSO(J) are the market shares for gas and oil, and ρ is a parameter for the sensitivity to price differences between oil and gas. The sum of the market shares for gas and oil is 1.0. The default scenario value for the parameter ρ is -1.0.

Given market shares for oil and gas, an average price for oil and gas, PE(J), is calculated for each demand region, that is

$$PE(J) = [PG(J) * FSG(J)] + [PO * FSO(J)] \qquad (7)$$

The demand for oil plus gas in each region depends on the previous 5-year period's demand for oil plus gas, DB(J), an annual energy growth rate for oil plus gas, EG(J), and a conservation factor, that is

$$D(J) = DB(J) * [1 + EG(J)]^5 * [PE(J)/PEB(J)]^{\sigma} \qquad (8)$$

where PEB(J) is the value of PE(J) in the previous period, and σ is a parameter. The current values for the conservation coefficient σ range from -0.8 to -1.0.

The demand for gas in each region is the market share for gas, FSG(J), multiplied by the total demand for oil plus gas in that region, that is

$$DG(J) = D(J) * FSG(J) \tag{9}$$

The production in each supply region, PD(I), is the sum of its market shares in all demand regions, that is

$$PD(I) = \sum_{J} SG(I,J) * DG(J) \tag{10}$$

Finally, the cumulative production of gas in each supply region, Q(I,T), is updated, that is

$$Q(I,T+5) = MIN\left[Q(I,T) + 5 * PD(I) \ , \ 0.999 * TR\right] \tag{11}$$

where T is time and the model has 5 year increments. The MIN function is used to insure that cumulative production never exceeds the total resource available. For the next period the model starts over at Eq. (1).

Internal Distribution

1. R. G. Alsmiller, Jr.
2. T. D. Anderson
3. J. Barhen
4. R. A. Bradley
5. T. R. Curlee
6. R. M. Davis
7. C. W. Forsberg
8. E. C. Fox
9. W. Fulkerson
10. G. R. Hadder
11-15. F. C. Maienschein
16. A. M. Perry, Jr.
17-21. F. G. Pin
22-26. D. B. Reister
27. M. W.Rosenthal
28. R. Salmon
29. R. B. Shelton
30-34. L. D. Trowbridge
35-39. C. R. Weisbin
40. A. Zucker
41-42. Central Research Library
43. ORNL Y-12 Technical Library Document Reference Section
44-45. Laboratory Records - RC
46. ORNL Patent Office
47-51. EPMD Reports Office

External Distribution

American Gas Association, 1515 Wilson Boulevard, Arlington, VA 22209
52. L. Tucker

Applied Management Sciences, Inc., Suite 701, 962 Wayne Avenue, Silver Spring, MD 20910
53. J. V. Conopask
54. P. Mihlmester

Data Resources, Inc., 29 Hartwell Avenue, Lexington, MA 02173
55. S. Smith

Decision Focus, Inc., 4984 El Camino Real, Los Altos, CA 94022
56. R. H. Males
57. D. M. Nesbitt

Duke University, 4875 Duke Station, Durham, NC 27706
58. M. Gillis

Edgerton, Germeshausen, and Grier, Inc.,WCBW3, P. O. Box 1625, Idaho Falls, ID 83415
59. P. W. Dickson, Jr.

Electric Power Research Institute, P. O. Box 10412, 3412 Hillview Avenue, Palo Alto, CA 94303
60. F. R. Kalhammer
61. S. C. Peck
62. O. Yu

Emory University, Economics Department, Atlanta, Georgia 30330
63. R. F. Conrad

Exxon Company, P. O. Box 2180, Houston TX 77001
64. W. R. Finger

Gas Research Institute, Suite 730 North, 1331 Pennsylvania Avenue, N. W., Washington, DC 20004-1703
65. R. H. Hilt
66. J. I. Rosenberg
67. T. J. Woods

John F. Kennedy School of Government, Harvard University, Cambridge, MA 02138
68. W. W. Hogan
69. J. P. Kalt

Lewin and Associates, Inc., Suite 700, 1090 Vermont Avenue, Washington, D. C. 20005
70. M. Godec
71. V. A. Kuuskraa

Machine Vision International, Inc., 325 East Eisenhower, Ann Arbor, MI 48104
72. R. Haralick

Massachusetts Institute of Technology, 77 Massachusetts Avenue, Cambridge, MA 02139
73. M. A. Adelman
74. D. O. Wood

Rensselaer Polytechnic Institute, Troy, NY 12181
75. D. Steiner

Stanford University, Stanford, CA 94305
76. G. H. Golub
77. A. S. Manne
78. J. L. Sweeney
79. J. P. Weyant

U. S. Department of Energy, Office of Fossil Energy, Washington, DC 20545
80. D. J. Beecy
81. R. J. Braitsch, Jr.
82. K. N. Frye
83. H. W. Hochheiser
84. C. Klym
85. R. A. Parent
86. G. Rudins

U. S. Department of Energy, Washington, D. C. 20585
87. R. P. O'Neill
88. J. D. Pearson
89. J. Stanley-Miller

Washington University, Department of Engineering and Policy, Campus Box 1106, St. Louis, MD 63130

90. E. A. Browne

91-120. Technical Information Center, P.O. Box 62, Oak Ridge, TN 37831

121. Office of Assistant Manager for Energy Research and Development, DOE-Oak Ridge Operations Office, P.O. Box E, Oak Ridge, TN 37831