MARTIN MARIETTA ENERGY SYSTEMS LIBRARIES
3 4456 0055251 4

ORNL/TM-9644

ornl

OAK RIDGE NATIONAL LABORATORY

MARTIN MARIETTA

Irradiation Capsule for Testing Magnetic Fusion Reactor First-Wall Materials at 60 and 200°C

J. A. Conlin

OAK RIDGE NATIONAL LABORATORY
CENTRAL RESEARCH LIBRARY
CIRCULATION SECTION
4500N ROOM 175
LIBRARY LOAN COPY
DO NOT TRANSFER TO ANOTHER PERSON
If you wish someone else to see this report, send in name with report and the library will arrange a loan.

OPERATED BY
MARTIN MARIETTA ENERGY SYSTEMS, INC.
FOR THE UNITED STATES
DEPARTMENT OF ENERGY

Printed in the United States of America. Available from
National Technical Information Service
U.S. Department of Commerce
5285 Port Royal Road, Springfield, Virginia 22161
NTIS price codes—Printed Copy: A03; Microfiche A01

This report was prepared as an account of work sponsored by an agency of the United States Government. Neither the United States Government nor any agency thereof, nor any of their employees, makes any warranty, express or implied, or assumes any legal liability or responsibility for the accuracy, completeness, or usefulness of any information, apparatus, product, or process disclosed, or represents that its use would not infringe privately owned rights. Reference herein to any specific commercial product, process, or service by trade name, trademark, manufacturer, or otherwise, does not necessarily constitute or imply its endorsement, recommendation, or favoring by the United States Government or any agency thereof. The views and opinions of authors expressed herein do not necessarily state or reflect those of the United States Government or any agency thereof.

ORNL/TM-9644
Dist. Category UC-20c

Engineering Technology Division

IRRADIATION CAPSULE FOR TESTING MAGNETIC FUSION REACTOR FIRST-WALL MATERIALS AT 60 AND 200°C

J. A. Conlin

Date Published - August 1985

NOTICE: This document contains information of a preliminary nature. It is subject to revision or correction and therefore does not represent a final report.

Prepared by the
OAK RIDGE NATIONAL LABORATORY
Oak Ridge, Tennessee 37831
operated by
MARTIN MARIETTA ENERGY SYSTEMS, INC.
for the
U.S. DEPARTMENT OF ENERGY
under Contract No. DE-AC05-84OR21400

MARTIN MARIETTA ENERGY SYSTEMS LIBRARIES
3 4456 0055251 4

CONTENTS

	Page
ABSTRACT	1
1. INTRODUCTION	1
2. SPECIFICATIONS	3
3. DESIGN CONSIDERATIONS	4
4. THERMAL ANALYSIS	9
5. PROTOTYPE CAPSULE	10
6. RECOMMENDATIONS	18
6.1 200°C Capsule	18
6.2 60°C Capsule	18
6.3 General	18
ACKNOWLEDGMENTS	19
APPENDIX A. MFE-6J IRRADIATION CAPSULE SPECIMENS	21
APPENDIX B. MFE-6J CAPSULE FLUID FLOW TESTS	25
APPENDIX C. ANALYSIS OF THERMAL PERFORMANCE	31

IRRADIATION CAPSULE FOR TESTING MAGNETIC FUSION REACTOR FIRST-WALL MATERIALS AT 60 AND 200°C

J. A. Conlin

ABSTRACT

A new type of irradiation capsule has been designed, and a prototype has been tested in the Oak Ridge Research Reactor (ORR) for low-temperature irradiation of Magnetic Fusion Reactor first-wall materials. The capsule meets the requirements of the joint U.S./Japanese collaborative fusion reactor materials irradiation program for the irradiation of first-wall fusion reactor materials at 60 and 200°C. The design description and results of the prototype capsule performance are presented.

---

1. INTRODUCTION

A joint U.S./Japanese collaborative irradiation program to evaluate the irradiation damage to candidate first-wall Magnetic Fusion Energy (MFE) Reactor materials has been established. This is an extension of the ongoing U.S. MFE materials irradiation program that has been in progress for a number of years. A part of the joint program is the irradiation of Japanese and U.S. material specimens in the Oak Ridge Research Reactor (ORR) at 60 and 200°C in a capsule, with the provision for tailoring the neutron flux spectrum to closely match the helium production/atom displacement ratio (12/1) that is expected in a fusion reactor first wall. This is possible in thermal reactor irradiations of nickel-bearing alloys due to the generation of helium voids from the two-step reaction:

$$^{58}Ni + n \rightarrow {}^{59}Ni \ ,$$

$$^{59}Ni + n \rightarrow {}^{56}Fe + \alpha \ .$$

It is necessary, however, to "tailor" or harden the neutron spectrum as the irradiation progresses. If the spectrum is not tailored, the helium-to-atom displacement ratio will, as helium precursor ^{59}Ni builds up, exceed that of a fusion reactor.

The spectral tailoring in the ORR is accomplished by varying the amount of neutron moderator and thermal neutron absorber material surrounding the experiment. The experiments occupy a 3- by 3-in. ORR core fuel position. Initially, the medium surrounding the specimen capsule is water with as little structural material as possible. As the irradiation progresses, the surrounding water medium is replaced with aluminum, except for a small coolant water annulus. Subsequently, a thermal neutron absorber (hafnium) is added to harden the flux spectrum further.

2. SPECIFICATIONS

The specifications for this capsule were detailed in the U.S./Japanese agreement. The agreement calls for four irradiation temperatures, 60, 200, 300, and 400°C. The 300 and 400°C irradiations are to be carried out using an existing Oak Ridge National Laboratory-ORR capsule design (series MFE-4) with modifications to accommodate a different specimen complement than that of the earlier U.S. capsules. The 60 and 200°C case required a completely new design since those temperature ranges cannot be accommodated in the MFE-4 configuration.

The specimen complement requested for each temperature is listed below:

Specimen type	Number of specimens
Flat tensile (SS-1)	96
Grodzinski fatigue	96
Pressurized tube	16
Crack growth	40
TEM disks	360

The specimen details are illustrated in Appendix A.

3. DESIGN CONSIDERATIONS

All specimens are stainless steel and are compatible with the ORR coolant water. Since the coolant water enters the reactor at 50°C, the simple solution to the 60°C irradiation was to cool the specimens by direct immersion in the reactor coolant.

The 200°C case presented a different, and much more difficult, problem. Previous capsule designs, the MFE-4 series, have the specimens immersed in liquid metal (NaK) as a heat transfer medium. The NaK is contained in a double-walled vessel with a small gas gap between the two walls. The gas gap is filled with a controlled mixture of inert gases — He and Ne or He and Ar — which, by reason of the variable thermal conductivity of the gas mixture, provides a means of temperature control. The double wall also provides the double containment required for irradiating sizable quantities of NaK in the reactor core.

It is not feasible to use this configuration for 200°C irradiation because of the relatively high gamma heating rate (to 8 W/g) of the ORR core. The mass and thermal resistance of a capsule of the MFE-4 type is such that the minimum operating temperature attainable is well above 200°C even if no gas gap were included for temperature control.

A number of new configurations and materials combinations were considered as means of achieving the desired temperature. The design finally chosen is a concentric arrangement with the 200°C specimens in a central capsule surrounded by the 60°C specimens in an annular structure. An annular coolant water passage is provided between the two assemblies.

Figure 1 is a horizontal cross section through the specimen region of the capsule, whereas Fig. 2 is a vertical cross section along the centerline. The entire assembly fits into an aluminum core piece that has the external configuration of an ORR fuel element and a cylindrical axial hole through its center. The capsule is cooled by reactor coolant water that passes through the core piece and over the capsule.

The 60°C specimen holder is a stainless steel cylinder with vertical grooves on its outer surface into which the specimens are placed. A thin-wall stainless steel sleeve slips over the assembly to hold the specimens in place. The grooves extend beyond the sleeve at each end so

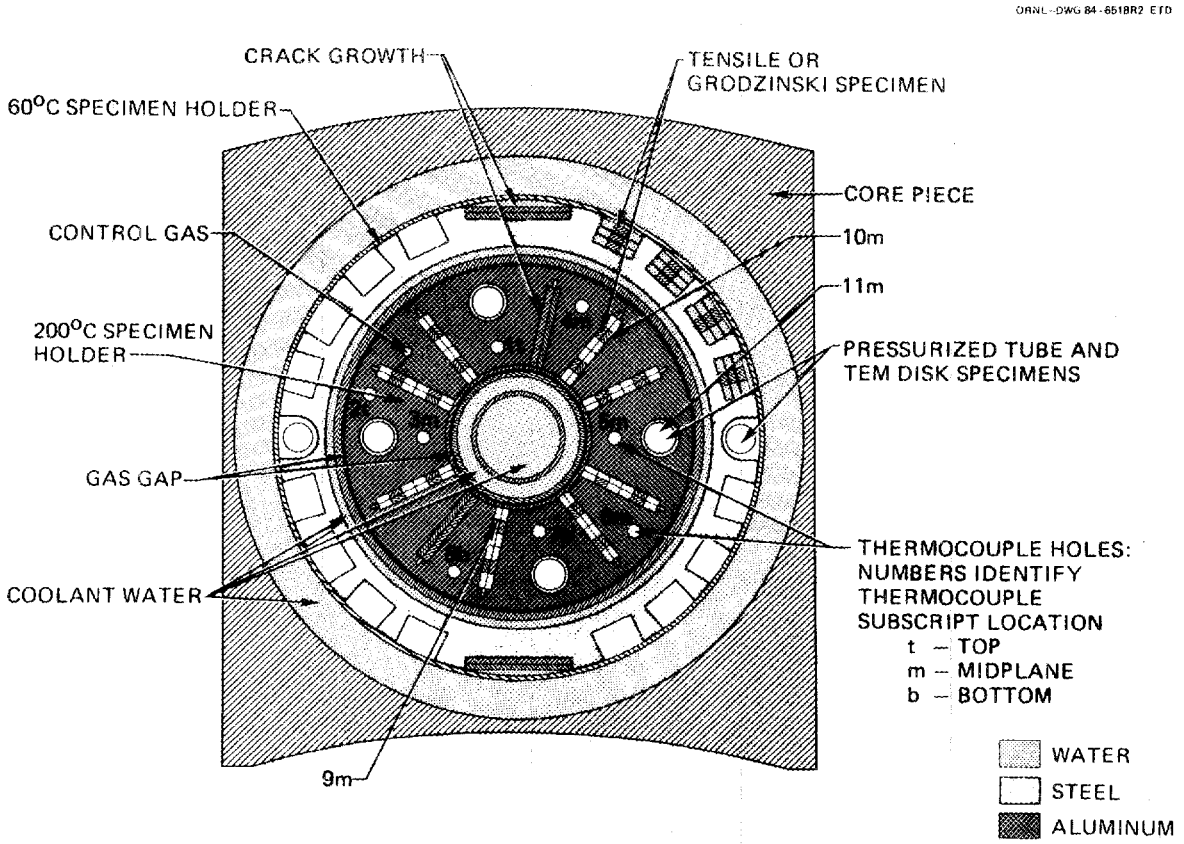

Fig. 1. Horizontal cross section through specimen region of irradiation capsule MFE-6J

that coolant water can pass over the specimens. An annular orifice at the upper end of the sleeve provides a pressure drop of ~20,000 Pa (3 psi) to ensure that there will be some flow through the grooves and over the specimens. The water flow over the inner and outer surfaces of the 60°C assembly removes most of the heat. The flow in the grooves ensures that no gas pockets or stagnated water regions occur in the specimen cavities.

The 200°C capsule assembly fits within the inside diameter of the 60°C assembly and is cooled by the water flow in the annulus between the two assemblies and internally by a reentrant water coolant tube that enters at the bottom (Fig. 2). A portion of the water passing over the outer surface enters the reentrant tube through a lantern gland and exits through a central tube. A disk at the bottom of the capsule serves to center the 200°C assembly within the 60°C assembly and also functions as an orifice plate to distribute part of the water into the reentrant tube.

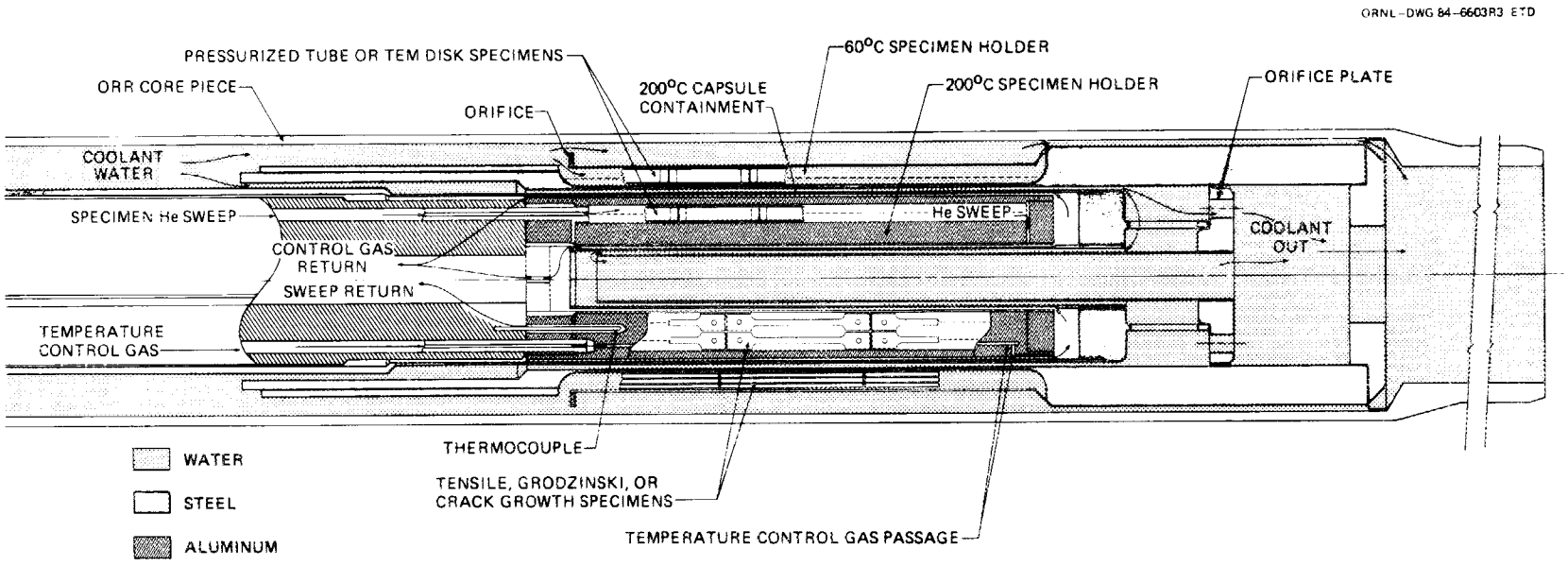

Fig. 2. Vertical cross section through in-core region of irradiation capsule MFE-6J.

The internals of the 200°C capsule consist of an aluminum cylinder with close-fitting cavities into which the specimens are inserted. The heat generated in the specimens (5 to 8 W/g) is transferred to the aluminum cylinder. The close clearance (<100 μm) between the specimen and the aluminum, together with the use of a helium atmosphere within the specimen region, minimizes the temperature difference between the specimens and aluminum.

A temperature control gap is provided between the aluminum and the water-cooled stainless steel outer containment as well as around the central reentrant coolant tube. A controlled mixture of He and Ne or He and Ar is swept through the gas gaps for temperature control.

The specimen cavities are of two types: axial slots broached from the internal diameter of the aluminum and axial holes. The slots are occupied by flat tensile, Grodzinski and flat crack-growth specimens (see Appendix A). Each slot is 230 mm long and can hold 20 flat tensile or Grodzinski specimens, or 18 crack-growth specimens. Two double-layer rows of five tensile or Grodzinski specimens are accommodated in each slot for a total of twenty per slot. The crack-growth specimens are also placed in the slot in a double layer, but their larger width and shorter length permit only a single row of nine specimens. Close dimensional tolerances result in a clearance between the double-layered flat specimen and the slot of 13 to 90 μm (0.0005 to 0.0035 in.). A 90-μm clearance results in a maximum calculated temperature uncertainty between the specimen and aluminum of only 10.5°C, even assuming the highest value of 8 W/g for gamma heating.

The transmission electron microscopy (TEM) disk assemblies and pressurized tube specimens, each 25.4 mm long, occupy axial holes in the aluminum; there are nine specimens per hole. The holes are 0.25 mm (0.010 in.) larger than the tube specimens to allow for creep. The tube specimens have small centering ferrules on the ends. When surrounded by a helium atmosphere in an 8-W/g gamma field, the tubes will be only 10°C above the aluminum temperature. The TEM disks will be inserted in aluminum holders with a small gap between the holder and aluminum cylinder to minimize temperature differences.

The specimen holder is instrumented with eight 1.0-mm sheathed thermocouples (TCs) in close-fitting holes. Two TCs are located at each end and four at the midplane.

The specimen cavities of the aluminum cylinder are isolated from the temperature control gas region by aluminum plugs pressed into either end of the cylinder. The TCs and sweep gas lines penetrate the top plug through close-fitting holes (Fig. 2). Helium sweep enters the specimen region through a 3-mm tube that screws into the top of one of the pressurized tube specimen holes. The gas passes down through that hole and then back up to the top through the other specimen cavities. The helium exits the specimen region through the clearances between the upper plug and the gas and TC lines.

The control gas, a mixture of He and Ne or He and Ar, passes through the upper plug in a 3-mm tube that screws into a gas passage drilled in the aluminum holder. The gas passage exits at the bottom into the temperature control gas region surrounding the aluminum specimen holder. The control gas then passes upward through the inner and outer temperature control gas gaps. Both the helium sweep and the temperature control gas streams intermix above the aluminum specimen holders and pass up through the capsule lead pipe to the top of the reactor vessel then through tubing to reactor off-gas. The helium sweep flow through the close clearances between TCs and gas lines and the top aluminum plug of the specimen holder prevents intermixing of the control gas into the specimen region. There is no positive seal between the two gas streams.

The remainder of the 200°C capsule is, with one exception, of conventional construction. A 2-in. stainless steel lead pipe connects the capsule proper to an upper assembly with a flange that bolts to a reactor vessel head access flange. This lead pipe is a part of the capsule containment and also serves as a conduit for the instrument and gas lines. The upper assembly is unique in one respect: an O-ring sealed gland is provided that allows for a 75-mm vertical capsule adjustment. This makes it possible to adjust the capsule vertical position within the reactor core as required to center the capsule midplane at the gamma heat peak. The gas and instrument lines pass through hoses that connect the upper assembly to the pool wall where the lines tie into the ORR capsule facility.

4. THERMAL ANALYSIS

The irradiation temperature of the specimens is the most important test parameter. For the 60°C case the specimens are immersed in flowing reactor coolant water that enters the reactor at 50°C, and no instrumentation is needed; if water flow over the specimens is ensured, the specimen temperature can be only slightly above that of the water.

The 200°C specimens are closely fitted in the instrumented aluminum holder. Every effort was made to reduce the uncertainty between the temperature of the aluminum holder and specimens. The fits are made as close as practical tolerances to 12 μm (0.0005 in.) will allow. A helium atmosphere is maintained between the specimens and the aluminum holder to maximize interface conductance.

The temperature difference between the specimen and the aluminum holder is a function of the thermal resistance between the specimens and the aluminum, which depends on the size of the gap between the specimen and the gas in the interface. For the flat tensile specimen, the tolerances allow a maximum clearance of 90 μm (0.0035 in.) between a two-layer specimen assembly within the slot. A one-dimensional calculation (infinite flat plate) of the worst case (specimens are centered in the slot with equal gaps on either side) gives, at 8 W/g of gamma heating, a specimen temperature only 10.5°C above that of the aluminum. This estimate is conservative, since no allowance is made for edge losses from the finite specimens or for the fact that it is improbable that the specimens would be exactly centered in the slot. In practice, the specimens will probably be touching or almost touching the aluminum over a large fraction of the specimen surface.

A one-dimensional calculation was made for the pressurized tube specimens, which have a 0.12-mm (0.005-in.) gap between the specimen and aluminum to allow for specimen creep. The results gave a 10°C temperature difference between the specimen and aluminum at 8 W/g.

A two-dimensional r-θ calculation was made of the temperature distribution within the aluminum. The maximum variation was found to be 6°C at 8-W/g heat rate assuming a thermal conductivity in the 6061 aluminum of 155.7 W/m·K (90 Btu/h·ft·°F) and no central cooling.

5. PROTOTYPE CAPSULE

A prototype of the capsule, loaded with dummy specimens, was built and tested in the ORR to evaluate the overall design. The capsule construction is identical to that proposed for the actual experiment with the exception that dummy specimens were used, some of which were instrumented with TCs. The flat tensile and Grodzinski specimens were simulated by simple flat strips having the same mass as the equivalent specimens but easier to fabricate. One slot for both the 60 and 200°C positions was loaded with specimens having the exact actual specimen configuration to ensure that no unexpected problems existed. The configuration of the crack-growth dummy specimens was the same as real specimens. The pressurized tube dummy specimens were the same as the actual specimens except that there were no end plugs in the tubes. This provided a straight hole through all the tube specimens. Flux monitor wires, and in one case, a TC, were placed in these holes.

In the 200°C capsule two of the dummy tensile specimens had 0.75-mm TCs (Nos. 9 and 10 in Fig. 1) fitted into holes drilled into the specimen edge. One of the dummy tube specimens had a 1.5-mm sheathed TC with the sheath spot welded to the inside of the tube. This latter TC was not expected to give direct indication of a real specimen temperature because the pressurized tube (4.57-mm OD × 4.06-mm ID) contained, in addition to the TC, a 1.5-mm tube loaded with flux monitor wires. The TC plus the flux monitors have a total mass per unit length equal to that of a tube specimen alone. The gamma heat of the TC, flux monitor, and tube must be transferred to the aluminum holder through the gap between the tube and aluminum. In addition, the relatively large size of the TC compared with that of the tube presents a poor geometry for precise temperature measurement. Nevertheless, from the readings of the TC, much can be deduced about the temperature to be expected in a real specimen.

The capsule was inserted in the ORR September 5, 1984. It proved possible to raise the instrumented flat specimen temperatures from 140°C with pure helium in the control gas region to more than 300°C with pure argon control gas. Pure neon typically gave a specimen temperature of

230°C, and mixtures of argon gave intermediate temperatures. The instrumented flat specimens operated with only a 2 to 5°C temperature difference and, by adjusting the temperature control gas composition, the mean indicated temperature of the specimens could be maintained within ±2°C. Figures 3 and 4 are plots of thermocouple temperature (TE) vs control gas composition. To avoid excessive curve overlapping, some TC temperatures

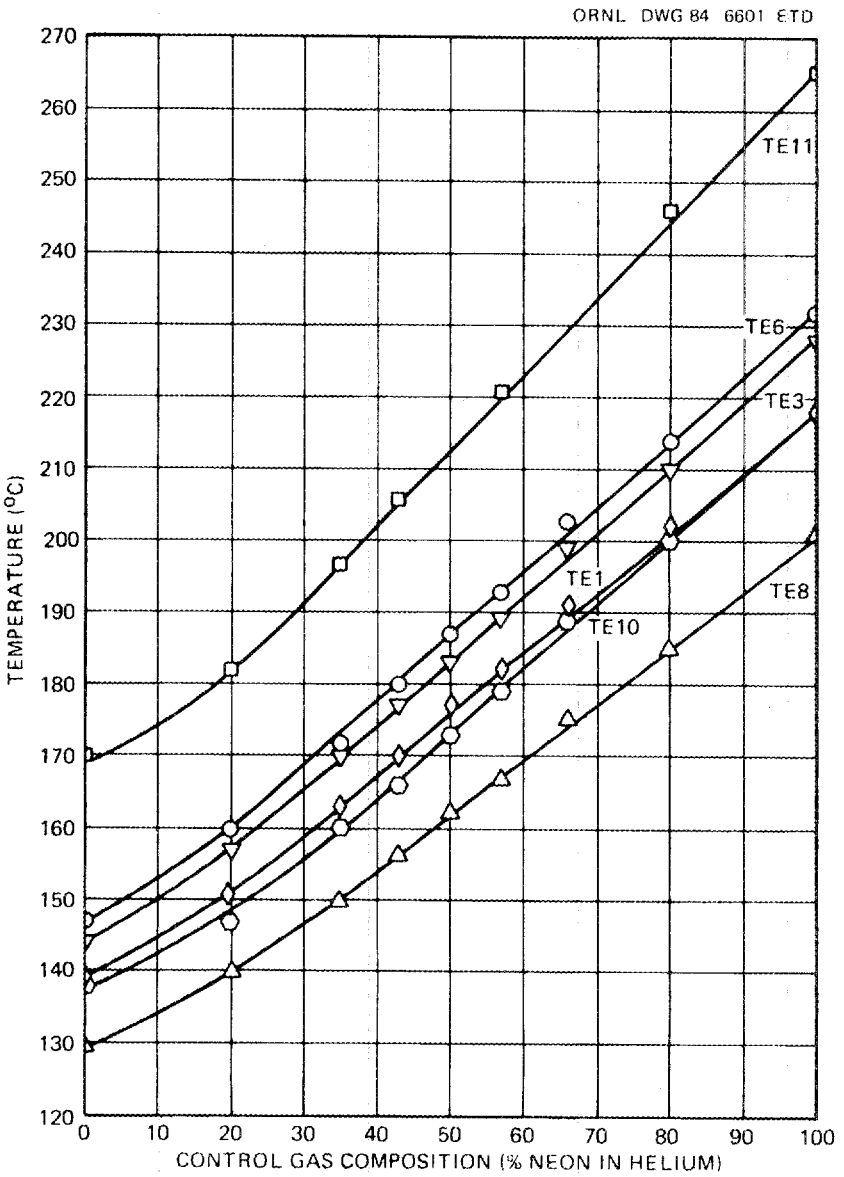

Fig. 3. Indicated temperatures for thermocouples (TE) vs percent neon in control gas region of the 200°C test region of MFE-6J prototype capsule.

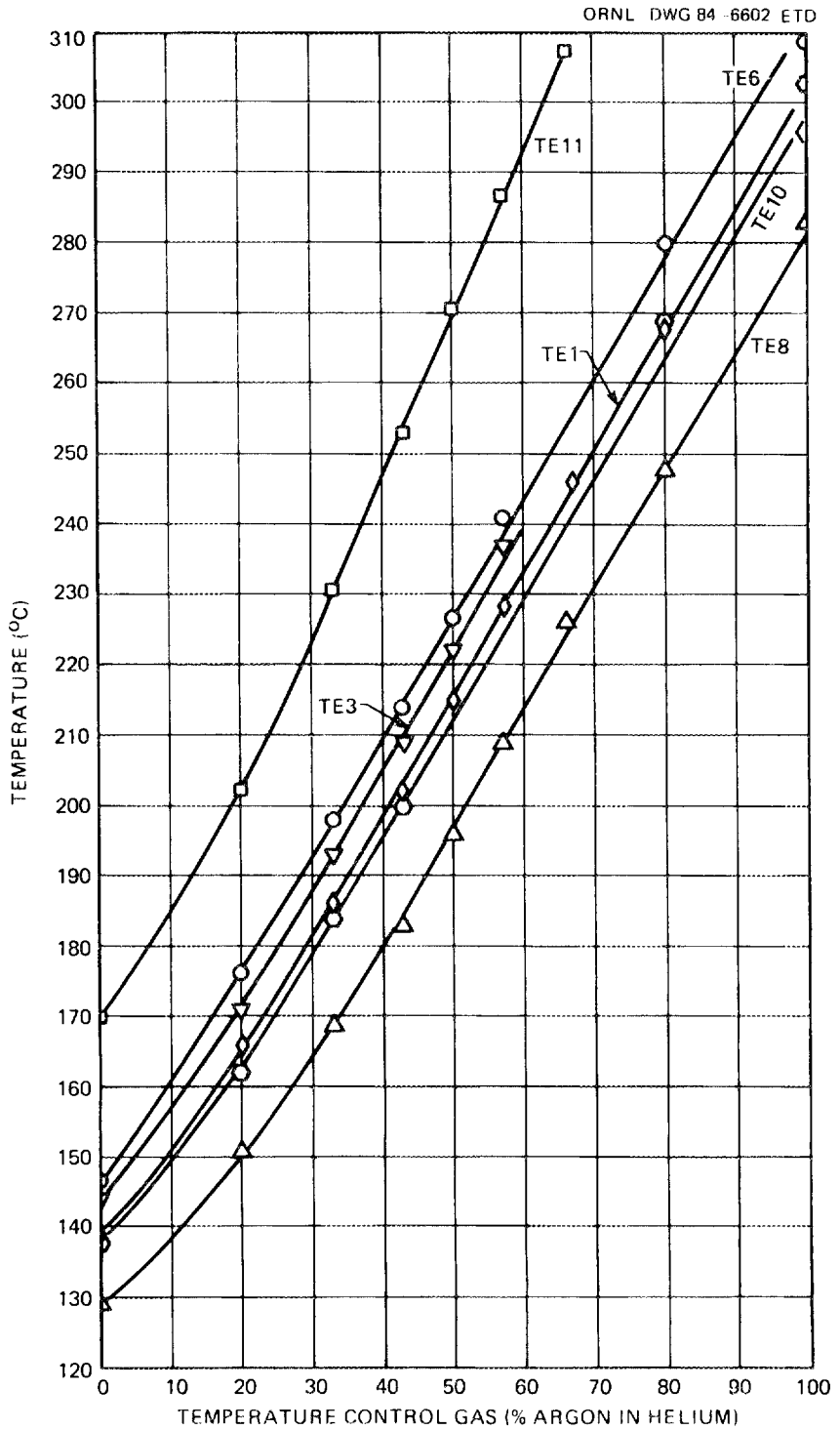

Fig. 4. Indicated temperature for thermocouples vs percent argon in control gas region of the 200°C test region of MFE-6J prototype capsule.

were not plotted. The TC locations are identified in Fig. 1. TC-4 is not plotted because a postassembly X ray showed that it had slipped out of position. The diameter of the TC holes in the aluminum are stepped, and the junction of TC-4 was intended to be in the part of the hole with a 1.8-mm (0.070-in.) diameter. The X ray showed it to be out of place and in a region where the hole is actually 2.36 mm (0.093 in.) in diameter. As would be expected TC-4 exhibited a higher temperature reading and greater sensitivity to sweep gas composition than the correctly placed ones.

The instrument tube specimen, as expected, operated at a higher thermocouple indicated temperature. During the initial reactor startup the tube specimen indicated temperature, TC-11, gave a sudden jump of a few degrees, which seems to indicate that the TC spot weld to the tube wall, tenuous at best, failed. This would leave the TC without any direct mechanical contact to the tube specimen and would add an additional temperature difference.

The TCs in the aluminum holder indicated an axial temperature gradient. The upper end of the aluminum, TC-1 and -2, operated at 10°C lower than the midplane and the lowermost TCs, TC-7 and -8, at about 30°C below midplane temperature. An attempt was made to minimize this difference by raising the capsule position 2 cm to move the lower end of the capsule closer to the location of the reactor gamma heat peak. This had little effect. The axial gradient is assumed to be a consequence of heat loss at the ends. Therefore, in future capsules, a guard heater in the form of a gamma-heated steel insert and insulation will be incorporated to reduce end losses.

The variation of temperature at TC-1, -2, -7, and -8, located at the upper and lower ends of the capsule, with control gas composition is slightly lower than that at the midplane TCs (Fig. 3). This is as expected; as neon or argon is added to the control gas, the thermal resistance of the temperature control gas gap increases uniformly over the entire length. However, the heat generation at the ends is lower than at midplane; hence, the temperature increase is less.

An anomaly exists with the tube specimen TC-11. Its temperature vs gas composition slope is greater than all other measured temperatures.

This anomaly is tentatively explained by postulating the existence of a gas flow leak between the control gas region and the tube specimen hole in the aluminum containing this TC, for which there is additional evidence as described later.

A series of tests was run to determine the ability of the helium sweep flow to maintain a helium atmosphere in the specimen region. Sweep and total control gas flows were each normally maintained at 30 mL/min. It was possible to reduce the sweep to 3 mL/min before seeing any rise in indicated temperature except for TC-11, which exhibited a change at 17 mL/min. A rise in indicated temperature will occur if the lower conductivity control gas enters within the specimen region. Tests were also made with a fixed control gas mixture but with increasing amounts of neon and argon in the sweep. This was done to obtain a measure of the uncertainty in the indicated vs actual temperature. Since all elements in the capsule (including TCs) are heat sources, an inherent error will always exist. If one plots temperature vs the reciprocal of gas conductivity ($1/k$) and extrapolates to $1/k = 0$, theoretically, one should arrive at the indicated temperature that would exist if there were no thermal resistance in the gas surrounding the TCs and specimens. The parameters are plotted in Fig. 5. The results show very close agreement at the midplane even for TC-4, which was found to be out of position as explained previously. TC-7 (inner radius) and TC-8 (outer radius) do not give good agreement upon extrapolation to $1/k = 0$. Inner TC-7, which should be in a slightly higher temperature region, extrapolates to 273°C, whereas TC-8 extrapolates to 281°C.

Note that the flat specimen temperatures TC-9 and -10 are located at the midplane and show the least variation with gas composition. In general, TC-9 and -10 are also at a temperature somewhat lower than the midplane aluminum TCs. This indicates that the temperature difference between the flat specimens and aluminum is in all probability less than that between the aluminum and the TCs in the aluminum. Figure 5 is useful as an indication of overall temperature uncertainty. The evidence indicates that unless a different design for the aluminum temperature instrumentation is provided [e.g., smaller diameter (smaller mass) TCs or a tighter fit in the hole is employed], there will be an inherent

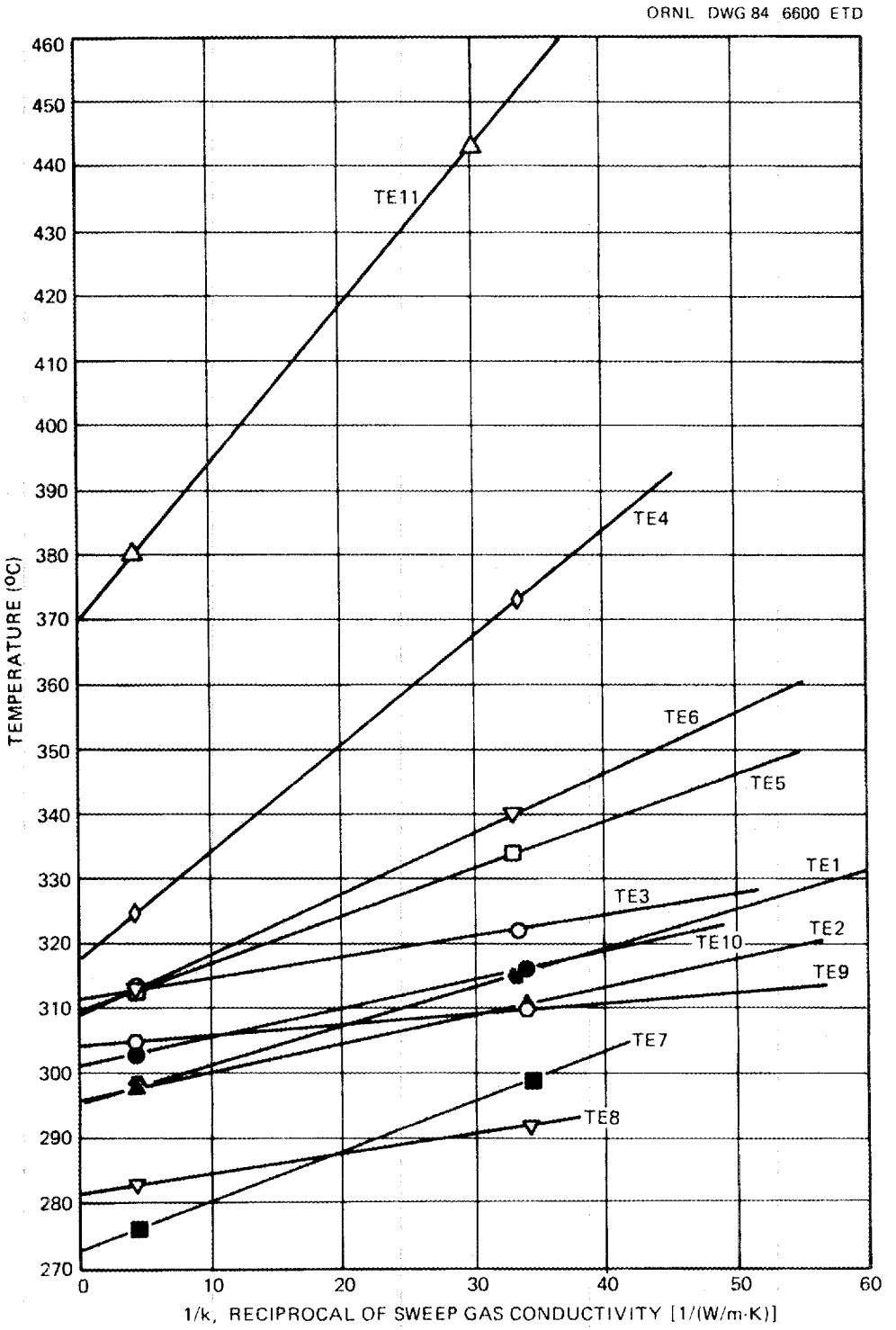

Fig. 5. Indicated temperatures in the 200°C test region of MFE-6J prototype capsule vs reciprocal of sweep gas conductivity with a control gas of 100% argon.

uncertainty of about 10°C between the TC indication and specimen holder temperature. Such a design change is planned for the real MFE-6J capsule where 1.02-mm-diam (0.040-in.) TCs will be placed in 1.04-mm-diam (0.041-in.) holes. These size TCs have been used in other experiments with a high degree of reliability at the proposed MFE-6J operating temperatures. Additional confidence in reliability is gained since these TCs will not be immersed in NaK. The uncertainty is in any case much less than that of many experiments in which no such evaluation has been made.

The plot of TC-11 vs 1/k does not give good agreement; a possible explanation follows.

Subsequent to gathering the data discussed previously, it was decided to operate the capsule at the maximum attainable temperature, about 305°C, until such time as the reactor space was required by the real specimen assembly. The purpose was to learn something about the suitability of this design for operation at higher (300°C) irradiation temperatures. In particular, there is no data on radiation-induced swelling in aluminum at elevated temperature. If swelling occurs the control gas gap and, hence, the ability to maintain temperature will decrease.

After about 120 h at 305°C and a total irradiation time of 740 h, it was observed that a change in capsule operating pressure [normally 413 kPa (60 psig)] caused a change in indicated temperatures. A pressure change within the capsule will cause changes in gas flow rates. It was found that any increase in control gas flow (argon) or decrease in sweep flow (helium) resulted in an increase in indicated temperature. It was determined that argon control gas was intermixing with the sweep gas. At a total flow of 30 mL/min of argon control gas, a helium sweep flow of 85 mL/min was required to eliminate the effect. If the argon flow were increased above 30 mL/min, it was then necessary to increase the helium sweep to maintain normal temperature indication. Previous tests had indicated no cross mixing until the helium sweep had been reduced to about 3 mL/min (except for the case of TC-11).

One can only surmise what exactly has happened, but it appears that a cross flow leak has occurred. Aluminum at 300°C is well above its stress-relieving temperature. The plugs at the lower and upper ends of

the aluminum support cylinder, which separate the two gas regions, are a light press fit. It is conceivable that the plugs have become loose and allow cross flow mixing. Another possible cause could be an internal leak within the aluminum between the control gas and specimen regions. The control gas passage is a long small hole, ~1.8 mm diam, drilled axially through the entire length of the aluminum cylinder; it is possible that "run-out" between this hole and an adjacent specimen hole left a paper-thin barrier between the two passages that has subsequently failed. The anomalous response of TC-11 may favor this explanation. Early in the irradiation when the sweep gas was reduced while maintaining a constant control gas helium/neon mixture, all temperatures, except for TC-11, remained constant until the sweep was reduced from 35 mL/min to about 3 mL/min. When the sweep was reduced to 17 mL/min, the temperature of TC-11 rose from 243 to 249°C. At 3 mL/min TC-11 read 259°C, whereas all other indicated temperatures had risen only 2 to 3°C. Also, the plots of indicated temperatures vs 1/k in Fig. 5 are reasonable, except for TC-11. A leak between the outer surface of the aluminum holder (control gas region) and the hole occupied by TC-11 could explain the anomalous response. TC-11 typically operated 30 to 35°C above the flat specimen temperatures, TC-9 and -10. An estimate taking into account the increased gamma heat from the flux monitors and TC-11 occupying the same space accounts for only about 20°C of the difference. This assumes the TC weld to the tube inside diameter is intact. It is possible that (1) a control gas leak into the region of TC-11 existed early on, perhaps from porosity or undetected "run-out" in the long drilled hole, and (2) that the leak increased after operation at 300°C.

We cannot determine the cause until the capsule has been disassembled in a hot cell. The capsule has been scheduled for removal late in December 1984 and will undergo disassembly and examination in January 1985.

Appendix B summarizes the results of coolant water flow tests made prior to installation in the ORR. Appendix C summarizes an analysis of the thermal performance of the 200°C capsule in the ORR.

6. RECOMMENDATIONS

6.1 200°C Capsule

1. Determine and correct the cause of the indicated sweep-control gas cross-leakage.

2. Consider the elimination of the reentrant water coolant tube in the center of the capsule and drill eight 0.65-cm coolant flow holes in the lower orifice plate to enhance overall coolant flow. The central reentrant tube accounts for an estimated 25% of the cooling but is complicated and increases the potential for capsule leaks. An evaluation of the effect of eliminating the central coolant tube is given in Appendix B.

3. Provide insulation and a guard heater at the lower end of the aluminum specimen holder to reduce the end heat losses to minimize the axial temperature gradient.

6.2 60°C Capsule

1. Modify the design to eliminate all steps in the outer diameter of the part containing the specimen grooves. This request was made by persons operating the hot cells to allow easier hot cell assembly and disassembly.

2. Provide for the subsequent addition of a hafnium sleeve within the reactor core piece with a minimum water annulus surrounding the 60°C capsule. At present the orifice to ensure water flow through the 60°C specimen cavities interferes with the positioning of such a sleeve.

6.3 General

Analysis of the prototype capsule flux monitor wires should be carried out and an evaluation of the initial rate of helium production in the specimens made. If deemed desirable, the water fraction surrounding the capsule for the initial phase of the irradiation may be increased by providing a core piece in which the external corners (see Fig. 1) are machined off.

ACKNOWLEDGMENTS

The author gratefully acknowledges the efforts of several people who made contributions to this project. I. I. Siman-Tov aided in the performance of the two-dimensional heat transfer analysis; J. W. Woods and D. W. Heatherly assisted in the mechanical design and supervised the assembly of the prototype; E. D. Clemmer operated the prototype capsule at the ORR; and L. R. Greenwood of Argonne National Laboratory provided the dosimetry for the prototype.

Appendix A

MFE-6J IRRADIATION CAPSULE SPECIMENS

The following figures (A.1—A.5) illustrate the various specimens to be irradiated in the MFE-6J Irradiation Capsule. Note that Fig. A.4, crack-growth specimen, shows a 12.7-mm width. In the case of the 200°C capsule specimen, this width was reduced to 10.2 mm to accommodate the narrow slot in the aluminum holder. The pressurized tube specimen for the 200°C capsule will have small ferrules at either end to center them in the holes in the aluminum specimen holder. These ferrules are not shown in Fig. A.5.

ORNL-DWG 80-12051

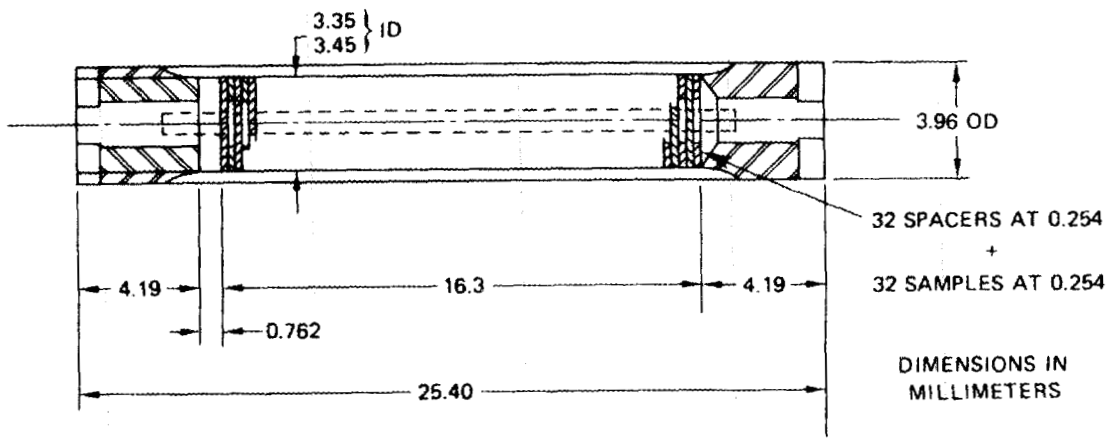

Fig. A.1. Transmission electron microscope (TEM) specimen holder.

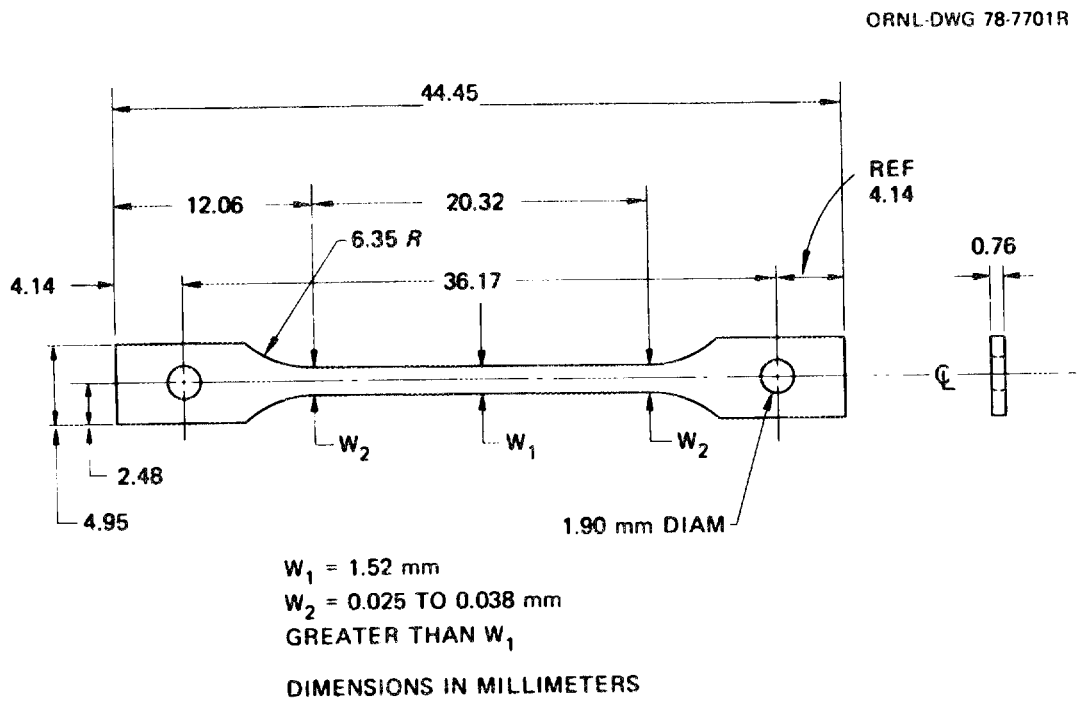

Fig. A.2. The SS-1 sheet tensile specimen.

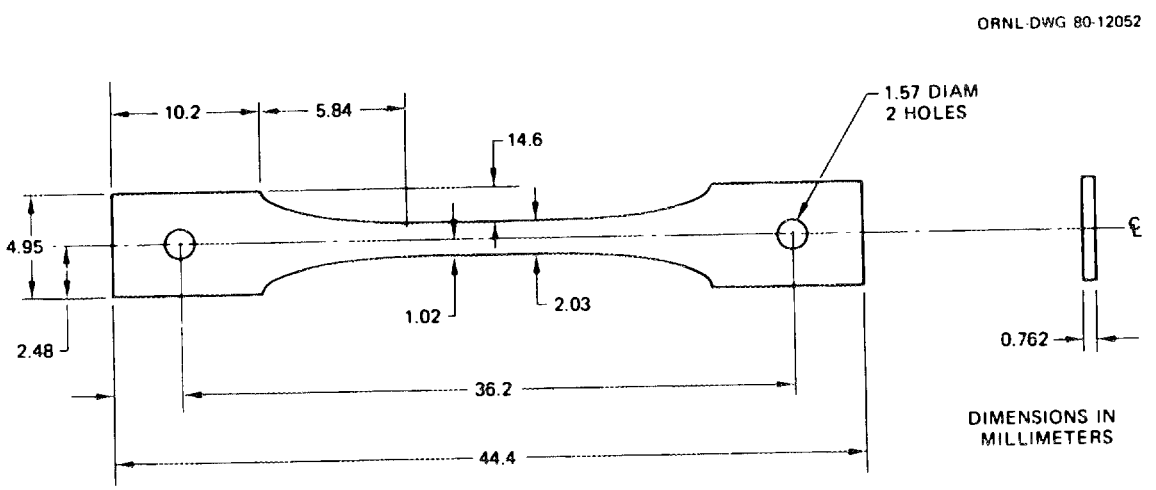

Fig. A.3. Grodzinski fatigue specimen.

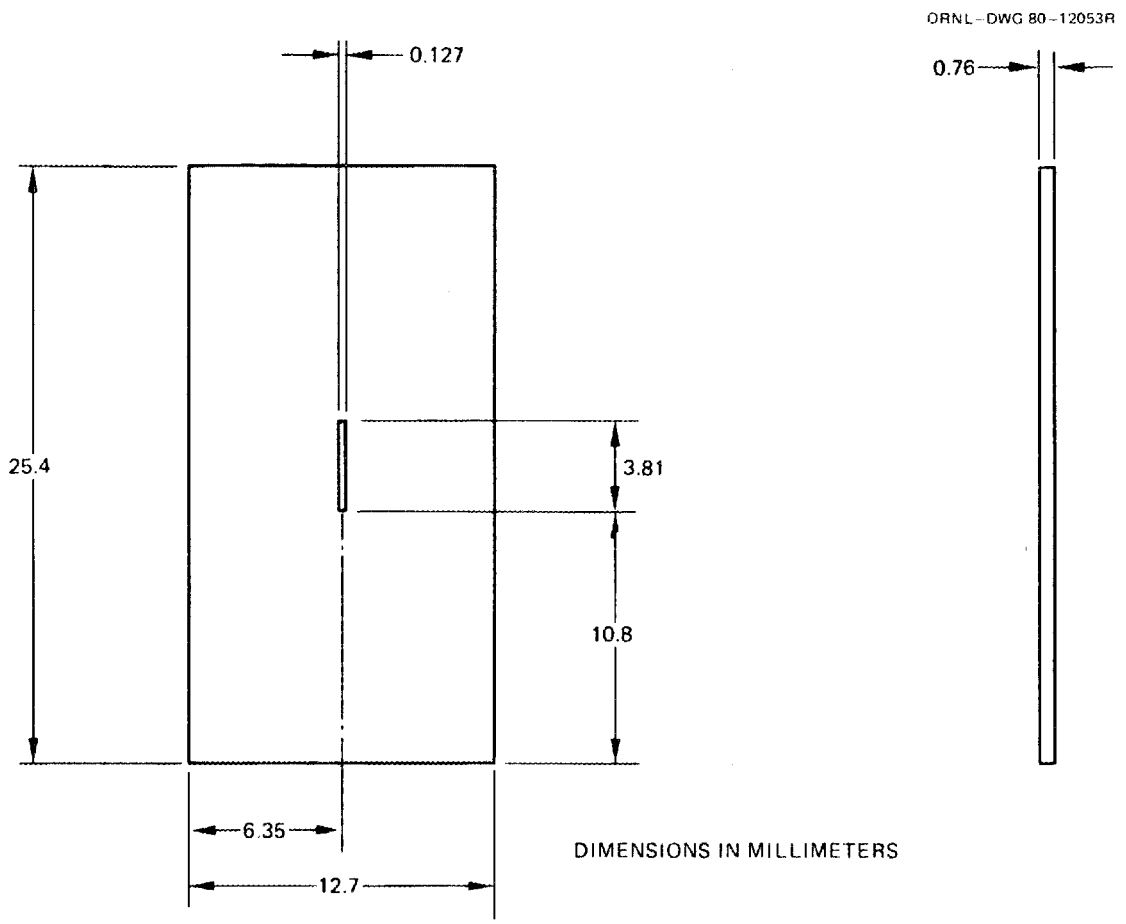

Fig. A.4. Crack-growth specimen. Tabs are welded along the 25.4-mm edge following irradiation.

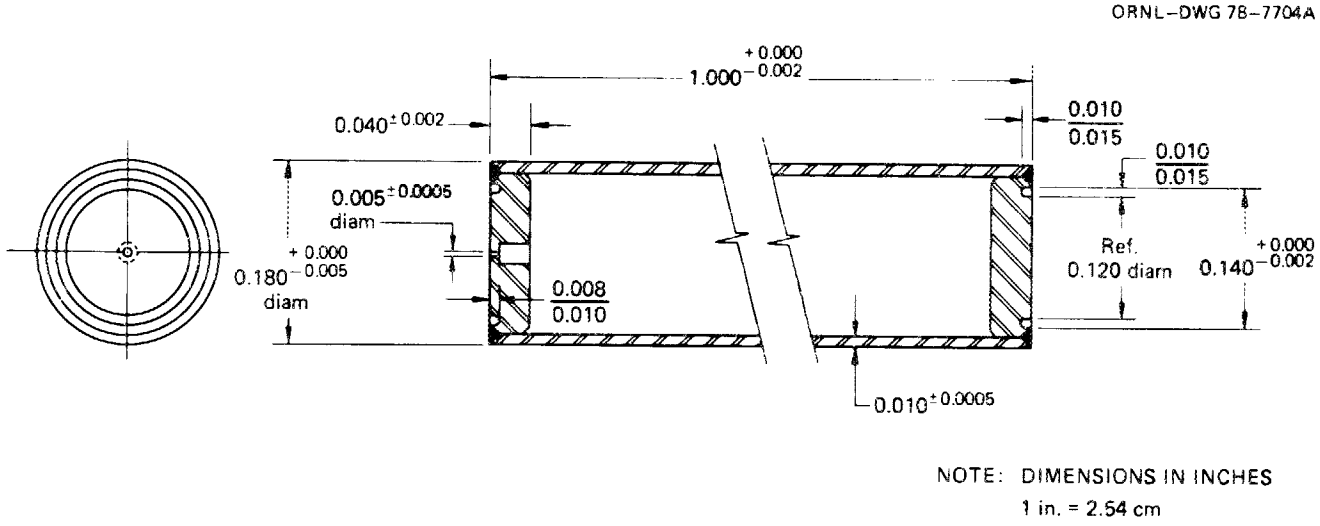

Fig. A.5. Pressurized tube creep specimen.

Appendix B

MFE-6J CAPSULE FLUID FLOW TESTS

A series of flow tests was made using the actual MFE-6J capsule parts to determine flows and pressure drops and establish the orificing for optimum coolant flow distribution. The results of the test are summarized in the attached letter — M. W. Kohring to J. A. Conlin, September 7, 1984, "MFE-J 60°C/200°C Capsule Flow Tests" (Exhibit B.1).

The tests were made in two phases. First, the 60°C assembly was placed in an ORR experiment core piece with the center region plugged. Both the flow in the annulus and the pressure drop across the orifice ring ("centering ring" in Exhibit B.1) on the outer surface of the 60°C assembly were measured. See Table 1 of Exhibit B.1. The orifice ring provides a pressure drop to ensure flow through the grooves that hold the 60°C specimens. Nominal pressure drop across the ORR core is 25 psig. This gives a flow (Table 1) of about 48 gal/min and an orifice pressure drop of about 19 kPa (2.8 psi). The radial clearance of this orifice with the ORR core piece was 0.060 in. This clearance has been reduced to 0.055 in. for the actual capsule to provide a somewhat greater pressure drop.

In the second phase, the 200°C assembly was placed within the 60°C assembly, the annulus between the 60°C assembly and core piece was sealed, and flow over the 200°C assembly was measured. The orifice plate at the bottom, as built, had eight 6.5-mm-diam holes providing the back pressure necessary to cause water to flow up through the reentrant central coolant passage. One objective of the test was to optimize the number of orifice holes for maximum heat transfer. The flow test rig was arranged to permit measurement of the reentrant flow as well as total flow.

Table 2 of Exhibit B.1 summarizes the results. Figure B.1 is a plot of the water film heat transfer coefficient for both the inner and outer coolant surfaces of the capsule vs flow. Based on this it was determined that two 6.5-mm orifice holes would approach optimum flow distribution. This gives a flow of 4.5 gal/min to the inner region; a film heat transfer

INTRA-LABORATORY CORRESPONDENCE

OAK RIDGE NATIONAL LABORATORY

September 7, 1984

To: J. A. Conlin

From: M. W. Kohring

Subject: MFE-J 60°C/200°C Capsule Flow Test

A series of flow tests was conducted during the period July 27-August 16 on the subject capsule simulating flow conditions across the core of the ORR (25 psid). The tests conducted are described as follows:

Flow Test 1 - Measured flow through the annulus between core filler piece (Dwg. M-11552-EM-003-D, R1) and 60°C specimen holder (Dwg. X2E11837-106A) and differential pressure across centering ring (not shown on drawing).

Flow Test 2 - A series of tests to measure the flow through the annulus between the 60°C specimen holder and the 200°C in-core capsule subassembly (X2E11837-107A) and to determine the ratio of the flow through the 1/4-in. orifices in the adapter piece (part #9 of X2E11837-107A) to the flow through the water outlet tube (part #6 of X2E11837-107A). This ratio was determined for various conditions altered by plugging some of the eight 1/4-in. orifices.

Results of the flow tests are detailed in the attached tables.

MWK:mca

Attachments

cc: G. R. Hicks
S. S. Hurt
J. A. Setaro
I. I. Siman-Tov
J. W. Woods

Exhibit B.1. Letter from M. W. Kohring to J. A. Conlin

Table 1. Results of Flow Test 1

Flow rate (gpm)	Differential pressure across assembly (psid)	Differential pressure across centering ring (in. H_2O)
24.0	6.2	14.8
28.8	10.2	30.6
33.6	13.4	47.6
38.4	18.0	57.5
43.2	20.9	66.9
44.2	22.2	70.0
48.0	25.0	78.0*

*Extrapolated value

Table 2. Results of Flow Test 2
(for 25 psid across assembly)

No. of orifices plugged	Total flow around 200°C in-core capsule subassembly (gpm)	Flow A (thru 1/4-in. orifices) (gpm)	Flow B (thru water outlet tube) (gpm)	Flow A / Flow B
8	10.2	3.6	6.6	0.55:1
7	14.9	9.4	5.5	1.7:1
6	18.7	14.0	4.7	3.0:1
4	20.7	17.8	2.9	6.1:1
2	22.0	19.9	2.1	9.5:1
0	23.0	21.7	1.3	16.7:1

Exhibit B.1 (continued)

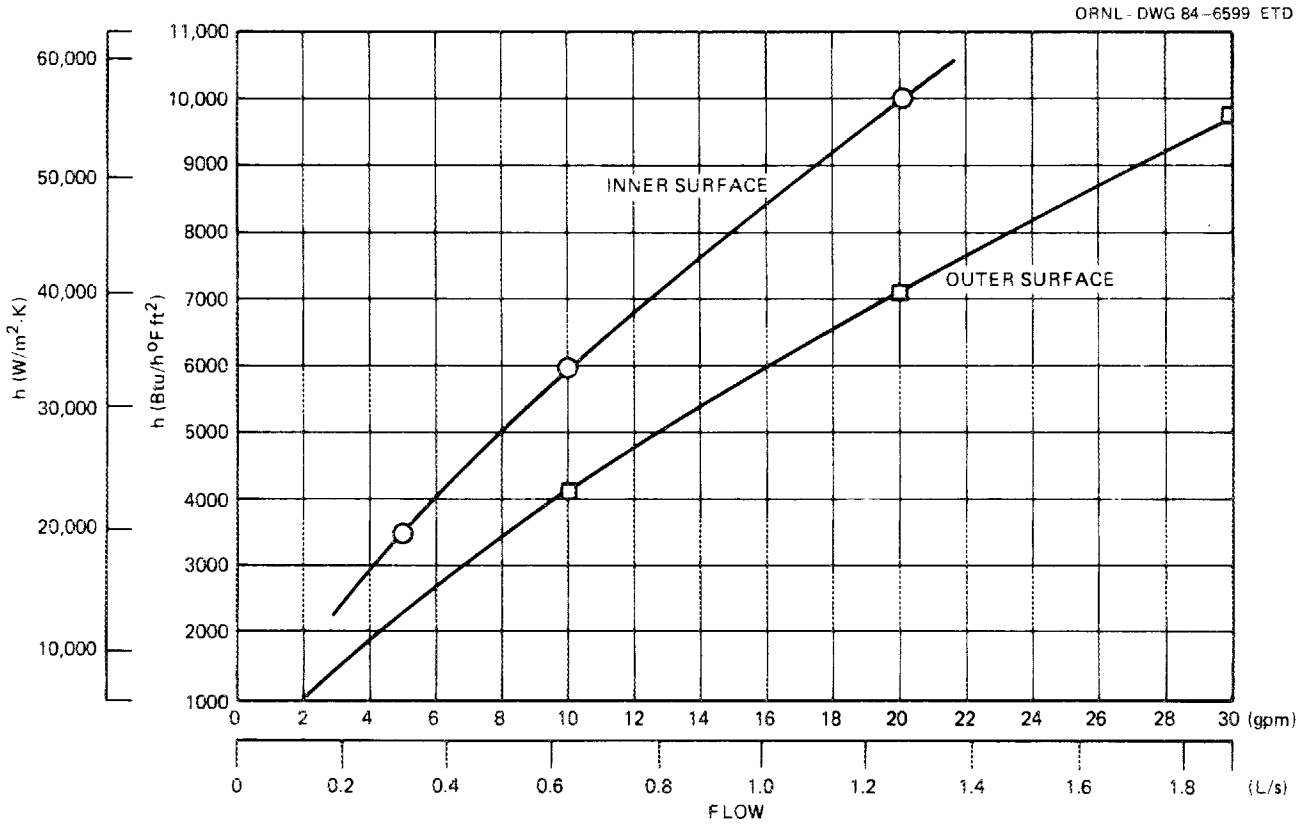

Fig. B.1. Surface heat transfer coefficients for 200°C region of capsule MFE-6J as a function of coolant flow rate.

coefficient of ~18,200 $W/m^2 \cdot K$ (3,200 $Btu/h \cdot °F \cdot ft^2$); ~18 gal/min over the outer surface; and a heat transfer coefficient of 36,900 $W/m^2 \cdot K$ (6,500 $Btu/h \cdot °F \cdot ft^2$). Note: Eight 6.5-mm holes in the orifice plate give a flow of 21 gal/min and a heat transfer coefficient of 42,500 $W/m^2 \cdot K$ (7,500 $Btu/h \cdot °F \cdot ft^2$) over the outer surface of the capsule.

Appendix C

ANALYSIS OF THERMAL PERFORMANCE

An analysis of the 200°C prototype capsule thermal performance was made. The heat generation within the capsule was calculated using measured temperatures with 100% He, Ne, and Ar as the temperature control gas. The water film heat transfer coefficients were taken from Fig. B.1. The operating gas gaps were calculated using as-built measured dimensions corrected for thermal expansion. The results are summarized in Table C.1. There is good agreement for the three control gas compositions despite the fact that they were made at different times and in different ORR fuel cycles. Note that the outer gas gap between the aluminum and stainless steel capsule wall is reduced to 0.038 mm (0.0015 in.) at 300°C with 100% argon. Aluminum may swell under irradiation, and even a small amount of swelling would seriously affect the ability of this capsule to maintain elevated temperatures.

It was recommended in the body of the report that consideration be given to eliminating the inner water coolant channel. This would simplify the construction considerably. Based on the observed operating conditions, removal of the central coolant would, with the as-built dimensions of the prototype, result in an operating temperature with 100% helium control gas of about 170°C. This reduces the margin for error or a change in ORR conditions. The design gas gap tolerances are as close as practicable. The mean, cold, as-built, outer gas gap was found to be 0.173 mm (0.0068 in.) (0.345-mm diametrical clearance). The drawing tolerances allow for a cold diametrical clearance of 0.358 mm (0.0141 in.) to 0.399 mm (0.0157 in.). The mean as-built diametrical clearance was 0.345 mm (0.0136 in.), which is slightly under the minimum allowed by the tolerances. If the maximum gas gap (as allowed by the tolerance) were present and there were no central cooling, the temperature with 100% helium control gas would be estimated to be about 185°C, leaving only a 15°C margin.

The average calculated heat generation rate of Table C.2 corresponds to a mean gamma heat of 5.3 W/g over the 230-mm (9-in.) specimen region.

Table C.1. Results of analysis of thermal generating conditions of MFE-6J prototype capsule

Temperature control gas	Specimen temperature (°C)	Gas gap [mm (in.)]				Mean control conductant [W/•K (Btu/h•°F•ft)]	Heat transferred across gas gaps[a] [W (Btu/h)]		Total [W (Btu/h)]
		Inner		Outer					
		Cold	Hot	Cold	Hot		Inner gap	Outer gap	
Helium	140	0.058 (0.0023)	0.076 (0.0030)	0.172 (0.0068)	0.124 (0.0049)	0.187 (0.108)	1762 (6014)	3307 (11290)	5069 (17304)
Neon	220	0.058 (0.0023)	0.090 (0.00358)	0.172 (0.0068)	0.0826 (0.00325)	0.061 (0.0352)	1180 (4028)	3705 (12648)	4885 (16676)
Argon	304	0.058 (0.0023)	0.107 (0.00423)	0.172 (0.0068)	0.038 (0.0015)	0.024 (0.014)	623 (2128)	4858 (16582)	5481 (18710)

[a]The heat rates presented are the total heat generated in the specimens and the 230-mm (9-in.) specimen region of the aluminum.

Table C.2. Results of gamma heating rate measurements made in position C-3 on February 28, 1984

Distance ORR midplane (in.)	Gamma heating (W/g)	
	Without hafnium sleeve	With hafnium sleeve
+9	2.4	2.2
+3	4.2	3.9
Midplane	4.9	4.5
−3	5.4	4.9
−6	5.4	5.1
−9	4.7	4.3

A gamma heat measurement was made February 28, 1984, in the ORR C-3 position with a mock-up simulating an MFE-4 capsule configuration both with and without a hafnium sleeve (Table C.2). The measured peak gamma heat in steel was measured at 5.4 W/g.

ORNL/TM-9644
Dist. Category UC-20c

Internal Distribution

1. L. A. Berry
2. E. E. Bloom
3. C. D. Cagle
4. E. D. Clemmer
5. J. A. Conlin
6. B. E. Corbett
7. J. A. Getsi
8. M. L. Grossbeck
9. S. Hamada
10. D. W. Heatherly
11. S. S. Hurt
12. R. E. MacPherson
13. B. H. Montgomery
14. O. B. Morgan
15. F. R. Mynatt
16. A. F. Rowcliffe
17. J. L. Scott
18. I. I. Siman-Tov
19. J. O. Stiegler
20. J. H. Swanks
21. M. Tanaka
22-26. K. R. Thoms
27. H. E. Trammell
28. C. D. West
29. J. W. Woods
30. ORNL Patent Office
31. Central Research Library
32. Document Reference Section
33-34. Laboratory Records Department
35. Laboratory Records (RC)

External Distribution

36. Argonne National Laboratory, Bldg. 205, 9700 South Cass, Ave., Argonne, IL 60439

    L. R. Greenwood

37-41. Hanford Engineering Development Laboratory, Westinghouse Hanford Company, P.O. Box 1970, Richland, WA 99352

    A. M. Ermi, Irradiation Technology
    R. W. Powell, Fusion Program, W/A-58
    R. J. Puigh
    J. L. Straalsund, Fusion Program, W/C-61
    H. Heinisch, Irradiation

42-44. Japan Atomic Energy Research Institute, Tokai Research Establishment, Tokai-mura, Naka-gun, Ibaraki-ken, Japan 319-11

    A. Hishinuma, Physics Metallurgy Laboratory, Nuclear Fuel Research Division
    T. Kondo, Deputy Director, Department of Fuels and Materials Research
    S. Jitsukawa, Physics Metallurgy Laboratory, Nuclear Fuel Research Difiision

45. Japan Atomic Energy Research Institute, 2-2-2, Uchisaiwai-cho, Chiyoda-ku, Tokyo 100, Japan

E. Shirai

46-48. U.S. Department of Energy, Washington, DC 20545,

Division of Development and Technology, Office of Fusion Energy, Office of Energy Research, ER-532:GTN

R. J. Dowling, Director

Reactor Technologies Branch, ER-533:GTN

G. M. Haas, Chief
T. C Reuther

49. AERE Harwell, Oxfordshire, OX11 ORA, England

K. J. Heary, Head, Research Reactors Division

50. Stichting Energieonderzoek Centrum Nederland, Postbus 1, 1755ZG Petten (NH), The Netherlands

R. J. Swanenberg de Veye, Head, Reactor Department

51. Joint Research Center — Petten Establishment, P.O. Box 2, 1755ZG Petten (NH), The Netherlands

P. von der Hardt, Head, HFR Division

52. Office of Assistant Manager for Energy Research and Development Department of Energy, ORO, Oak Ridge, TN 37831

53-226. Given distribution as shown in DOE/TIC-4500 under category UC-20c (Magnetic Fusion Energy — Reactor Materials)