OAK RIDGE NATIONAL LABORATORY LIBRARY
3 4456 0042029 3

ORNL/FEDC-84/9

FED LIBRARY MAR 22 1985

THE TOKAMAK SYSTEMS CODE

R.L. REID, et al.

FUSION ENERGY DIVISION LIBRARY

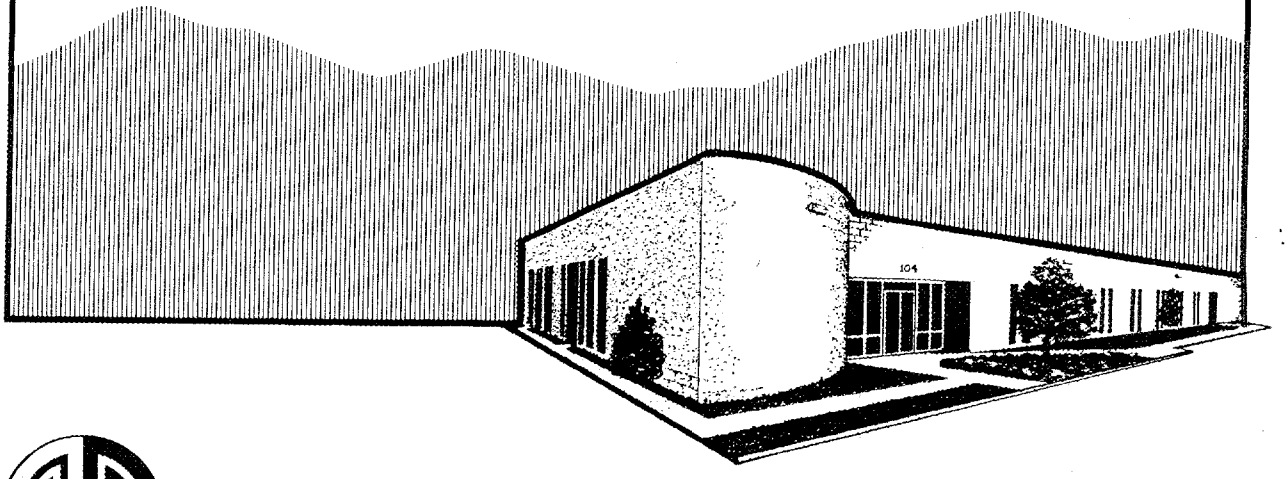

FUSION ENGINEERING DESIGN CENTER
OAK RIDGE NATIONAL LABORATORY
Operated by MARTIN MARIETTA ENERGY SYSTEMS, INC.

Printed in the United States of America. Available from
National Technical Information Service
U.S. Department of Commerce
5285 Port Royal Road, Springfield, Virginia 22161
NTIS price codes—Printed Copy: A21 Microfiche A01

This report was prepared as an account of work sponsored by an agency of the United States Government. Neither the United States Government nor any agency thereof, nor any of their employees, makes any warranty, express or implied, or assumes any legal liability or responsibility for the accuracy, completeness, or usefulness of any information, apparatus, product, or process disclosed, or represents that its use would not infringe privately owned rights. Reference herein to any specific commercial product, process, or service by trade name, trademark, manufacturer, or otherwise, does not necessarily constitute or imply its endorsement, recommendation, or favoring by the United States Government or any agency thereof. The views and opinions of authors expressed herein do not necessarily state or reflect those of the United States Government or any agency thereof.

ORNL/FEDC-84/9
Dist. Category UC-20 c,d

THE TOKAMAK SYSTEMS CODE

R. L. Reid
R. J. Barrett,[*] T. G. Brown,[$] G. E. Gorker,[‡] R. J. Hooper,[‡]
S. S. Kalsi,[‡] D. H. Metzler,[‡] Y-K. M. Peng, K. E. Rothe,[**]
P. T. Spampinato,[$] K. F. Wu, B. A. Cramer,[††] M. Y. Gohar,[‡‡] P. A. Finn,[‡‡]
J. Kamperschroer,[†] L. Southworth,[†] L. Stewart,[†] G. Bronner,[***]
S. Ghose[†††]

Date Published - March 1985

[*] FEDC/Burns & Roe
[†] GA Technologies
[‡] FEDC/General Electric Co.
[$] FEDC/Grumman Aerospace Corp.
[**] Computer Services and Teleoperations Division
[††] McDonnell Douglas Astronautics Co.
[‡‡] Agronne National Laboratory
[***] Princeton Plasma Physics Laboratory
[†††] Bechtel International

Prepared by the
OAK RIDGE NATIONAL LABORATORY
Oak Ridge, Tennessee 37831
operated by
MARTIN MARIETTA ENERGY SYSTEMS, INC.
for the
U.S. DEPARTMENT OF ENERGY
under Contract No. DE-AC05-84OR21400

OAK RIDGE NATIONAL LABORATORY LIBRARY
3 4456 0042029 3

CONTENTS

INTRODUCTION 1
EXECUTIVE SUMMARY 2
TSC USER'S GUIDE 15
APPENDIX 67
1. Physics Module 69
2. Torus Module 84
3. Toroidal Field Coil Module 138
4. Poloidal Field Coil Module 171
5. Inductance Module 189
6. Flux Linkage Module 190
7. Plasma Heating Systems 199
8. Neutral Beam/TF Coil Interface 255
9. Poloidal Field Power Conversion Module 263
10. Reactor Cell 300
11. Torus Vacuum Module 312
12. Tritium Processing Module 327
13. Fueling System Module 348
14. TF Power Conversion Module 365
15. Facilities Module 400
16. Heat Transport Module 408
17. AC Power Module 422
18. Instrumentation and Control Module 439
19. Maintenance Equipment Module 459
20. Cost Module 467

INTRODUCTION

This document describes the Tokamak Systems Code (TSC) developed at the Fusion Engineering Design Center (FEDC) over the past several years. The code will determine a tokamak configuration and associated performance and cost based on selected plasma and engineering input parameters. This document addresses both (1) user instructions for code operation and (2) description of the modeling of each major system of a tokamak reactor. The document is structured according to the following outline.

Outline of the Tokamak Systems Code Document

Introduction

Executive Summary

TSC User's Guide

Appendix (detailed descriptions of modules)

1. Physics
2. Torus
3. TF System
4. PF System
5. Inductance
6. Flux Linkage
7. Plasma Heating Systems
8. Neutral Beam/TF Coil Interface
9. PF Electrical
10. Reactor Cell
11. Torus Vacuum
12. Tritium Processing
13. Fueling System
14. TF Electrical
15. Facilities
16. Heat Transport System
17. AC Power System
18. Instrumentation and Controls
19. Maintenance Equipment
20. Cost Categories

SUMMARY OF THE TOKAMAK SYSTEMS CODE

CODE STRUCTURE

The FEDC Tokamak Systems Code calculates tokamak performance, cost, and configuration as a function of plasma and engineering parameters. This version of the code models experimental tokamaks. It does not currently consider tokamak configurations that generate electrical power or incorporate breeding blankets. The code has a modular (or subroutine) structure to allow independent modeling of each major tokamak component or system. A primary benefit of modularization is that a component module may be updated without disturbing the remainder of the systems code as long as the input to or output from the module remains unchanged. The independent modules are linked by a driver or executive routine in the order shown on the flow diagram presented in Fig. 1. The dashed lines on the flow diagram indicate major feedback loops between modules that present the choice of

I. specifying shield thickness or specifying the limitation on (1) nuclear heating in the toroidal field (TF) coils or (2) radiation dosage;

II. specifying the field on axis or the maximum field at the TF coils;

III. (1) specifying the aspect ratio and calculating the resulting burn time, or (2) specifying burn time and calculating the aspect ratio, or (3) specifying both aspect ratio and burn time with no constraint on self-consistency.

All user input to the tokamak systems code is in namelist format and is read from a single file. Data are transferred between subroutines by labeled common blocks. Output from each module is collected into a single file for printing. The code also generates the tokamak plan and elevation plots, which are automatically available after each code execution.

The geometrical configuration for the tokamak is established by starting at the plasma major radius and progressing radially inward to the ohmic heating (OH) solenoid and radically outward to the TF outer leg

ORNL-DWG 84-3755 FED

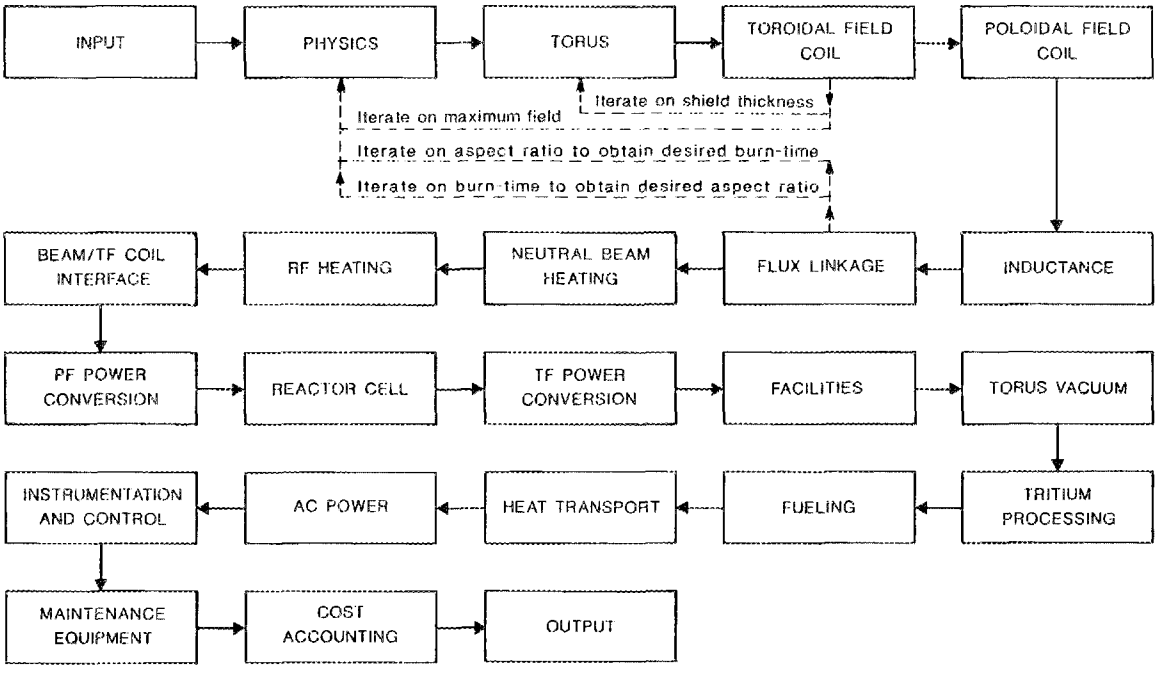

Fig. 1. Tokamak systems code flow diagram.

location. Certain combinations of input parameters will result in a configuration that has inadequate radial space between the plasma and machine centerline to accommodate all the tokamak components, in which case an error message is printed and the run is terminated. The radial dimensions are measured from the machine centerline. Vertical dimensions are measured from the horizontal midplane through the plasma center.

MODULE DESCRIPTION

A brief summary description of each module follows. A detailed description, including assumptions, key equations, and representative input and output for each module is provided in the appendix. A fortran listing of the code can be obtained by extracting the source files from the National Magnetic Fusion Energy Computing Center (NMFECC).

Physics Module

The physics module computes fusion, power amplification factor (Q), plasma current, fueling rate, and the required volt-seconds to induce the plasma current. This module is a zero-dimensional (0-D) representation with plasma density and temperature profile effects modeled as a function of plasma average temperature. Peak heating power during startup is modeled as the summation of two parts. The first part accounts for the plasma heat capacity at the operating point divided by the heating time period. This term is an attempt to include the dynamic effect of heating the plasma to its operating temperature in a finite time. The second part is the maximum quasi-steady start power required as the plasma temperature is raised to the operating value at constant plasma density. Two scaling relations for confinement time are available: International Tokamak Reactor (INTOR) ($\tau \propto n_e a^2$) and a form of GMS[1] ($\tau \propto a I_p$), where n_e is the electron density, a is the plasma minor radius, and I_p is plasma current. Flux conservation is assumed as the plasma is heated and makes the transition from low beta to high beta values.

Torus

The torus module performs neutronic, geometric, and cost calculations. The neutronics portion determines (1) radiation dosage to the TF coil insulation, (2) nuclear heating rate in the TF coil case, (3) displacement damage to the copper matrix of the TF coil, and (4) biological shutdown dosage rate as a function of inboard and outboard shield thickness. Shield thickness may be specified and the radiation parameters calculated. Conversely, limits on the radiation parameters may be imposed, and the value of shield thickness to meet the most stringent of those limits will be determined. The neutronic model is in the form of curve fits relating the results of detailed neutronics calculation performed at Argonne National Laboratory (ANL). This model relates dose, heating rate, fluence, etc., to shield thickness through an e-fold attenuation-type parameter. Stainless steel (the outboard shield material) or tungsten may be chosen for the inboard shield.

The torus weight and volume is based on either a D-shaped or a rectangular torus configuration. An option is available (IGLOO = 1) to split the outboard shield thickness and place only the amount necessary for magnet protection between the plasma and the outboard TF coil leg, while the remainder of the outboard shielding, necessary for biological requirements, is placed outside of the outer TF coil leg. Weight, volume, surface area, and cost are determined for the torus components, which include the first wall, armor, bulk shield, and pump limiter.

Toroidal Field Coils

The TF module addresses both the TF coil and the bucking cylinder. The TF coil ampere-turns are determined as a function of the plasma major radius and field on axis. The coil inboard leg radial dimension depends upon the plasma major radius, the plasma size, the inboard shield thickness, the assembly gaps, and the cryostat thickness. The TF coil maximum field is determined from the field on axis and the 1/R variation in field. The TF outer leg size is based on the larger of (1) a minimum radius to accommodate the torus or (2) a radius to limit the value of magnetic field ripple at the plasma edge to an acceptable

value. The TF coil shape may be a constant tension shape or an arbitrary shape specified by the user.

The coil radial thickness (build) is determined from the required ampere-turns and an overall current density derived from an input winding pack current density and an allowable TF coil stress. The allowable stress is based on crack-growth criteria and the number of tokamak cycles over the life of the device. The coil cross section can be specified as either trapezoidal or rectangular. Coil weight is determined from the TF coil circumference, cross section, and void fraction. Cost is determined as a function of conductor and structure weight.

An estimate is made of the stored magnetic energy and the cycle average ac losses in the coil case due to the pulsing poloidal field (PF) coils. The TF coil may be superconductive or resistive. Providing enhancement of the field on axis is possible by calling a copper insert subroutine.

A subroutine of the TF coil module calculates bucking cylinder thickness as a function of the TF coil centering force, the allowable yield stress, and the bucking cylinder outer radius. The thickness of the bucking cylinder is chosen on the basis of compressive stress or buckling stress, whichever criterion is the most stringent.

Poloidal Field Coils

The PF coil module determines coil currents, number of turns, locations, resistive losses, weights, and cost of the PF system. The module maintains the PF coils in the same position (relative to the plasma edge, the bucking cylinder, the shield height, the TF coil radius, etc.) as the input reference PF coil system. The equilibrium field (EF) coil currents (as a function of time) are scaled from the input reference values considering changes in coil locations and plasma current. The input reference EF system, upon which the scaling is based, was derived considering magnetohydrodynamic (MHD) requirements. The current in the OH solenoid is determined based on the maximum magnetic field allowed in the solenoid. The PF coils may be specified as either normal copper or superconducting. The conductor cross section is determined

from the calculated currents and input values of current density. Coil structure is based on an input allowable stress. Weights are calculated from the coil cross section, circumference, and coil void fraction. Cost is computed separately for the conductor and the case.

Inductances

The inductance module calculates the self-inductance and mutual inductance of the PF coils and plasma. The calculations are based on Gaussian integration and use elliptic functions. A uniform current density over the winding pack is assumed. The program was developed at Oak Ridge National Laboratory (ORNL) and has been in use for a number of years.[2]

Flux Linkage

The flux linkage module computes the volt-seconds available from the PF system, EF system plus OH solenoid, to induce the plasma current and maintain it during the burn. The available volt-seconds are based on the current waveforms for each coil generated in the PF module and the inductance matrix generated in the inductance module. The plasma current and volt-seconds required for startup are computed in the physics module. If more volt-seconds are produced by the PF system [assuming a full plus (+) to minus (-) flux swing in the OH solenoid] than is required to induce the plasma current, as specified by the physics module, the excess volt-seconds are available to sustain a burn pulse. If fewer volt-seconds are provided by the PF system than are required for startup, the code will print a message to that effect. The systems code then continues based on one of the three following options controlled by the variable IOPT. If IOPT = 0, there is no iteration on burn time, and the code continues to the next module. An input value of burn time, contained in the physics input, is passed to the remainder of the code (to calculate duty factor, etc.) regardless of the value of burn time calculated by an excess or deficiency of volt-seconds from the PF system. If IOPT = 1, the aspect ratio is adjusted, through an iteration back to the physics module, until the calculated burn time,

based on inductive volt-seconds, equals the input value of burn time. If IOPT = 2, the input value of burn time is adjusted through an iteration until it equals the calculated value of burn time consistent with the input aspect ratio.

Neutral Beam Module

The neutral beam module calculates the required electrical power, source size, and pumping requirements to deliver the neutral power required for plasma heating. The beam particle energy level is specified. Beam optics is based on duct and source geometry and on input values of allowable divergence in the horizontal and vertical direction. A direct recovery efficiency value can be specified. The number of beam lines and the number of sources per beam are specified. The code determines the various efficiencies (i.e., grid, reionization, optical, etc.) in computing electrical power requirements. Costs are determined for 17 neutral beam components and collected into three categories, namely, mechanical, electrical, and auxiliary costs.

Electrical power requirements for plasma heating during startup are provided by a motor-generator (MG) set. The steady-state plasma heating electrical power requirement, for driven tokamaks, is taken from the utility grid.

RF Module

The radio-frequency (rf) module allows the choice of ion cyclotron resonance heating (ICRH), electron cyclotron resonance heating (ECRH), or lower hybrid resonance heating (LHRH) for plasma heating. The electrical power requirements and launching frequency of the rf heating system are determined according to the required power delivered to the plasma. A value of LHRH-injected power for current drive can be specified by the user. The power requirement of the steady-state current drive is assumed to be taken from the utility grid. Startup power requirements are provided by a motor-generator set.

The costs for ECRH and ICRH are scaled as a function of injected power. The cost for LHRH is based on estimated costs for the various system components.

NB/TF Coil Interface

The neutral beam (NB)/TF coil interface module determines whether interference occurs between the beam line and two adjacent TF coils. Beam and coil positions and beam injection angles are required input parameters. The required and available height at the interface are computed, as well as the coordinates of intersection points between the torus wall and the injector. When either the width or height of the injector exceeds the available width or height between the two adjacent TF coils, a corresponding warning message is printed.

PF Electrical

The electric power conversion module determines the time-varying megavolt-ampere (MVA) requirement for the ac-to-dc power conversion equipment and the energy storage capacity of the motor-generator flywheel sets used to buffer the electric utility grid from the tokamak. Stored energy, MVA, and voltages during the startup, burn, and shutdown portions of the tokamak operating cycle are determined. Input to the module includes coil and plasma current, startup and shutdown time intervals, and mutual inductance values. Cost is estimated from power requirements, stored energy, buss lengths, etc.

Reactor Cell Module

The reactor building module determines the size of the reactor building and hot-cell facility and the thickness of the reactor building walls required for biological shielding. The building may be either cylindrical or rectangular, depending on input option. The size may be input directly, or it may be determined using device dimensions calculated in other modules, plus input concerning maintenance operations.

If the size of the reactor building is calculated, as opposed to input, it is sized according to a series of concentric rings representing clearance for various device components and maintenance operations, together with an off-center ring to allow for PF coil laydown area. The reactor building height is keyed to the height of the bucking cylinder. The size of the hot cell is scaled according to the removable shield sector size.

The cost of the reactor building and hot cell is scaled with building volume.

Torus Vacuum Systems Module

The vacuum module determines the minimum vacuum system needed to handle a gas load: (1) during the burn, (2) between burns, and (3) for initial pumpdown. The gas load and an associated total pumping speed are computed for the above options. The most stringent requirement is then used to size the vacuum system. The size of the vacuum ducts is usually what limits vacuum system performance. Therefore, an iterative routine is used to determine (1) the required number of ducts if the individual pump speed and duct dimensions are unchanged, (2) the required duct diameter if the individual pump speed and duct number are fixed, and (3) the required pump speed if the duct dimensions and number are fixed at a nonextreme limit. Once the vacuum system is sized, the major components (high vacuum pumps needed, backup pumps, and large-diameter metal valves) are costed assuming either cryosorption pumps or turbomolecular pumps. The vacuum system cost is based on that system maintaining the input-duct diameter and the calculated number of duct and pump speed.

The cost of nuclear shielding is also estimated for the vacuum ducts. The shield thickness is keyed to the outboard bulk shield thickness.

Tritium Processing

The tritium module determines mass flow rates for the primary tritium/deuterium fuel cycle. Tritium inventories in all major systems are calculated. An atmospheric tritium recovery system is assumed in

four areas (reactor hall, hot cell, tritium building, and rad-waste building). Capital costs for the major tritium systems are calculated using information supplied by Los Alamos National Laboratory (LANL), Mound facility (operated by Monsanto Research Corp.) and Tokamak Fusion Test Reactor (TFTR). Key parameters input by the user are the cost of tritium, removal efficiency of the atmospheric tritium recovery units, and desired cleanup time for each building that has an atmospheric tritium recovery unit.

Fueling

The fueling module calculates pertinent design requirements and cost data for the pellet injectors, gas injectors, and supporting systems. The code reads the user's data file and selected data from the physics code, fuel processing code, TF coil code, and the first wall and shield code. These data are used to compute requirements for pellet velocity, pellet weight, pellet rate, vacuum power, helium refrigeration, nitrogen refrigeration, and major equipment cost.

TF Electrical Power

The TF electrical power code determines design and cost data for the TF power conversion systems having resistive coils, superconducting coils, or a combination of resistive and superconducting coils. The code determines requirements and cost for power supplies, busing, load centers, coil protection equipment, and associated controls and instrumentation. It also provides an estimate of the floor space and building volume needed for the equipment.

Consideration is given to the different operating modes of resistive and superconducting coils. Resistive coils do not need as much coil protection equipment as the superconducting coils, since they are always in the resistive state. Superconducting coils are operated near 4K in the superconducting state, but they can go resistive if the design operating environment becomes unfavorable due to faulty equipment or operator error.

Under these conditions, the superconducting coils must be discharged quickly without exceeding their design voltage. The resistive TF coils require much more power than the superconducting coils and, hence, more power-conversion equipment.

Facilities Module

The facilities module determines the size and cost of all currently considered facilities and buildings, except for reactor buildings and hot-cell facilities, which are calculated in the reactor cell module. The buildings currently modeled are:

- reactor building
- hot-cell facility
- intake structures
- water treatment building
- recirculation structures
- TF coil electrical equipment
- OH and PF electrical equipment
- bulk heating electrical equipment
- motor-generator flywheel building
- cryogenic refrigeration building
- tritium processing building
- ventilation building
- radioactive-waste building
- control room building
- diesel generator building
- administration building
- mockup and shop building
- control room tunnel
- ventilation stack

The dimensions or volumes of each of the above buildings may be directly input by the user if so desired. Options also are available to size certain buildings based on data generated in other modules, such as the building housing the electrical equipment and the MG sets.

Also, the volume of the mockup and shop building can be scaled as a percentage of the reactor building and hot-cell volumes.

Costs are determined by applying unit cost factors (dollars/m^3) to the building volumes in question. The unit-cost factors are chosen to be consistent with the type of building being costed.

Heat Transport Module

The heat transport module collects heat generated in the various reactor and facility components and estimates the direct cost of the required heat transport system components. The components requiring heat removal include (1) reactor components (such as first wall, shield, limiter, neutral beams/rf heaters, resistive TF coils, tritium processing) and (2) facilities components (such as cryosystem components, ac/dc conversion components, and other facility-related components). Neither a blanket nor power conversion system is considered in this version of the tokamak systems code.

AC Power Module

The ac power systems module accumulates the power requirements, which are determined in other modules of the code, for the pulsed power, facility power, and backup power systems. This module computes installed costs for cables, structures, circuit breakers, switches, transformers, diesel generators, and no-break power supplies as a function of required power. Lightning arrestors and auxiliary cooling are included in the cost of the transformers. Isolation switches and instrumentation and controls (I&C) are included in the price of the circuit breakers.

Instrumentation and Control Module

The supervisory I&C code uses input data and data generated in other system code modules to determine cost calculations for eleven groups of process I&C, for ten groups of plasma diagnostics instrumentation, and for one archiving computer. The diagnostics instrumentation cost is

calculated for any one of the operating phases (hydrogen, deuterium, or tritium) as directed by user-input data.

Maintenance Equipment Module

The maintenance equipment module is a compilation of equipment that is used for contact and remote maintenance operations. This list of equipment is composed of items that are fixed in size and those, such as cranes, which vary in size according to the weight of the equipment being transported. Applying this module to different tokamak configurations is accomplished by changing the default input data, either by adjusting the equipment unit costs or by changing the required number of equipment units needed in the reactor building and hot cell. The module output consists of a listing of 30 equipment items, their unit cost, the required number for the reactor and the hot cell, and the total cost for each. In addition, the subtotal for the reactor building and hot-cell equipment costs are shown, along with a total for all equipment costs.

Cost Accounting

The cost module collects and sums the costs generated in the other systems code modules consistent with a standard code of accounts suggested in ref. 3. The input unit cost values for the sample case included in the "User's Guide" section of this report are in 1983 dollars.

REFERENCES

1. E. T. Gorbunov, S. V. Mirnov, and V. S. Strelkov, *Nucl. Fusion*, 10, 43 (1970).
2. M. W. Garrett, *An Elliptic Intergal Computer Package for Magnetic Fields, Forces, and Mutual Inductances of Axisymmetric Systems, and a Versatile Line-Tracing Routine*, ORNL/TM-3575, Oak Ridge Natl. Lab., April 1965.
3. S. C. Schulte, T. L. Willke, and J. R. Young, *Fusion Reactor Design Studies—Standard Accounts for Cost Estimates*, PNL-2648, Pacific Northwest Laboratories, May 1978.

TSC USER'S GUIDE

1. INTRODUCTION

The Tokamak Systems Code (TSC) is a major program comprised of 22 calculational modules (Table 1). Even though the TSC is complex, every effort has been made to simplify its use so that the user can concentrate on obtaining results. All input to the program is in namelist format and comes from a single input file. Reference cases not only contain complete, consistent input data, but also contain brief definitions of most of the input variables. The output is automatically collected into a single output file suitable for printing. Output files are also available for each module, should they be desired. Names of the input, output, plot, and internal data (block data) files can be controlled by the user.

The input contains about 300 variables to allow the user to describe most of the major tokamak systems. As with many complex programs, the initial efforts of a prospective user should be to become familiar with reference cases similiar to his case. With several reference cases available, the user should be able to find a case with many similarities with his case. Then he will likely have many systems which will require no changes in input variables to obtain satisfactory results.

Using the TSC requires five major steps:

1. preparing the local file area for TSC execution,
2. preparing the input for TSC,
3. executing TSC,
4. printing or reviewing the output, and
5. local file area cleanup.

The following detailed descriptions for executing the TSC assume that the user has an account and password on the NMFECC and has a basic knowledge of using the Cray computers. The TSC runs on either the C or D systems at NMFECC. In the following discussions, the command lines are presented as nearly like those the user will see on a CRT screen as

Table 1. Module names and corresponding output file names[a]

Module name	Description	Output file name
PHYSIC	Plasma physics and scaling	PHYTYP
FWS	First wall, shield, and limiter	FWSTYP
TF	Toroidal field coils, including copper insert coils, if used	TFTYP
PF	Poloidal field coils	PFTYP
RBT	Radial build table	RBTTYP
INDUCT	Inductance calculations	MTXTYP
VSEC	Volt-seconds calculations	VSTYP
NB	Neutral beam systems	NBTYP
RFH	Radio frequency heating systems	RFTYP
NBGEOM	Neutral beam geometry calculations	NBGETYP
ELEPOW	Electrical equipment systems for pulsed power systems (mainly PF and heating)	ELETYP
REABLG	Reactor building and hot cell facility	RBTYP
TRIT	Tritium handling systems	TRITTYP
VAC	Plasma chamber vacuum system	VACTYP
FUEL	Pellet fueling system	FUELTYP
TFPOW	Toroidal field electric power system	TFPTYP
FACIL	Building and facilities description	FACTYP
MEQPT	Maintenance equipment	MEQTYP
HTS	Heat transport systems	HTSTYP
ACPOW	Alternating current electical power systems	ACPTYP
IAC	Instrumentation and control systems	IACTYP
SUM	Summation of costs for output	COSTTYP

[a]Module names are given in the order in which they are called when no iterations are needed.

possible. Exclamation marks represent the line-feed key (or ESC key on some terminals) and are presented as the user would see them. User-supplied information is shown enclosed in angle brackets (<>) with a brief description. The Cray computer restricts file names to eight characters or fewer and requires all commands in lower case (upper case terminals should use an option to allow appropriate translation). File names and commands are presented in upper case in the text for clarity.

2. LOCAL FILE AREA PREPARATION

In order to execute TSC, several files must be available in the user's local file area. The easiest way to establish these files is with the following sequence of commands:*

```
filem read 14362 .tscv3 tscdlib!end          (1)
lib tscdlib!x all.!end                       (2)
```

The FILEM utility retrieves the file TSCDLIB from its storage place in the FILEM storage area. The LIB utility unpacks the files stored in the TSCDLIB file so that they can be used by the user. The files necessary to execute TSC that will be extracted from TSCDLIB are

tscx
costact
user-supplied input file

The TSCDLIB file contains several reference data cases, as well as the files necessary to execute TSC (Sect. 3). It is recommended that the

---

*The exclamation mark (!) in the first sequence represents the line-feed command separator. Press a line feed (or ESC key on some terminals) at this point.

user use the TSCDLIB file to store his unique input files and make a copy of TSCDLIB in his own FILEM area. The commands necessary to perform these functions are*

```
lib tscdlib!a <input file name>!end                    (3)
```

This command adds the user's input file to the library file TSCDLIB. Once the file has been added, the library file can be updated with the following command:

```
lib tscdlib!u!end                                      (4)
```

For other uses of the LIB utility and to use FILEM to save a permanent copy of your files, see the NMFECC documentation.

2.1 Preparation of TSC Input

All the TSC input must be in one file that contains two namelists, CONTRL and INALL. The CONTRL namelist contains information to control the input and output for the program and name the output files. The INALL namelist contains all the input values for the calculational modules. A reference case should be used to establish the form and initial values for the input file. The general form for INALL namelist input and the input for the CONTRL namelist is discussed below.

2.2 Input for the INALL Namelist

The input for each module is discussed for that particular module in the appendix. Namelist input for the TSC is format-free input. The input is characterized by the name of the variable to be supplied followed by an equals sign (=), followed by the input value. Several variables can be placed on a single line and can be separated by either spaces or

---

*The angle brackets (<>) indicate user-supplied information. Do not include the angle brackets in the command line.

commas. Some variables are arrays and require additional attention to input form. Array values can be input in a number of ways. Individual array values can be input, implied DO loops can be specified, or values can be input in the order of storage. The forms shown in the reference cases should be followed when changing or adding to array variables. A text editor (e.g., TRIXGL or TEDI) can be used to modify and add to the input file.

2.3 Input for CONTRL Namelist

The CONTRL namelist is used to control the input and output of TSC. The input variables are described in Table 2. The file names for input and output can be overridden on the execution command line. The variable IOUT can be used to turn off all output, but this action does not make sense except in certain advanced applications that are currently under development. The block data files controlled by the INBLK and OUTBLK variables is also an advanced feature for use in TSC development and has not yet been fully implemented.

3. TSC EXECUTION

3.1 Normal Execution

Once the local files area is prepared and the input is ready, the execution of TSC is straightforward. The command line takes the following form:

```
tscx  i = <input file name>                                    (5)
```

where input file name is the user's input file.

3.2 Advanced File Control

A number of file control options are provided to allow the user as much flexibility as possible to name and control files. However, this added flexibility may tend to cause some confusion. If so, the

Table 2. CONTRL namelist input parameters

Symbol	Description	Unit	Source[a]
INBLK	Name of the input block data file for restart or single module execution	--	U
IOIN	Input control option (only ioin = 1 is recognized)	--	--
IOUT	Output control option; iout = 0 turns off most output; iout = 1 turns on normal output	--	U
IPLOT	Plot control option; iplot = 0 means no plot of configuration; iplot = 1 means to plot configuration	--	U
OUTBLK	Name of the output block data file	--	U
OUTFIL	Name of the combined output file	--	U
PLTNAM	Partial name of the plot file for the configuration (middle four characters)	--	U
RUNMOD	Name of the module to be run; runmod = "all" runs the entire TSC	--	U

[a]Source: U = input is supplied by user; C = input flows in from other modules of the code.

recommended method is given in Eq. (5). This section is not required to execute TSC and has been provided for completeness. The command line for all the options is

tscx <user options> (6)

where the user options can be any or all of the following. No options are required if only default file names are satisfactory. The options on the execution line override any corresponding file names in the CONTRL namelist.

i = <input file name> (7)

If no input file name is supplied, then the input will come from TSCINDT.

o = <output file name> (8)

If no output file name is supplied, then one of the following file names will be used, depending on the OUTFIL variable in the CONTRL namelist.

<file name assigned to outfil> (from CONTRL namelist)

OUTFILE (default)

File Control Examples:

The following examples should help explain these various file control options.

Assume that the CONTRL namelist has the variable specifications

inblk = " ", outfil = "dctout" , (9)

then the command line

tscx (10)

uses TSCINDT as the input file and DCTOUT as the output file name.

The command line

```
tscx i = dctin                                                    (11)
```

uses DCTIN as the input file and DCTOUT as the output file name.

The command line

```
tscx i = dctin, o = dct8out                                       (12)
```

uses DCTIN as the input file and DCT8OUT as the output file name.

4. REVIEWING OUTPUT

4.1 Output During Execution

A terse log of program activity is displayed at the terminal during TSC execution. This log shows the names of all input, output, and plot files used by the program. The execution of a few key modules is announced as their execution is started. This allows the user to see the iterations that may be taking place. Estimates of computer time are also displayed in the log but should only be used for comparison of different TSC runs. A number of error and warning messages may also appear in the log. These messages often give the name of the module where the difficulties were encountered, but this module may differ substantially from the location where the error was first introduced. Detailed error correction is beyond the scope of this document and will probably require the assistance of a TSC consultant. Most difficult errors require the use of the DDT utility program and a copy of the FORTRAN source code for resolution.

4.2 Complete TSC Output

The complete TSC output is collected into a single file that can be named by the user either on the execution command line or in the CONTRL namelist. This output file contains a copy of the terminal log

file, including the names of the output and plot files, a copy of the output from each module, and a listing of the input file. The NETOUT utility program is normally used to print the output file at the local printer. However, any of the various forms of output available to the NMFECC users may be used to recover the output file. The NETOUT command line for printing the TSC output file is

netout <output file name> site = <user site designation> (13)

4.3 Individual Module Output

The entire TSC output results in 30 to 40 pages of printed output. Files of this size are usually awkward to review from terminals. Thus, if review of specific module results is desired, the individual module output file may be more convenient to review. These module output files can be reviewed from the terminal using any of the various text editors. The module output file name is usually a contracted (three or four characters) name of the module with the characters TYP appended. For example, the output from the physics module is named PHYTYP. (See Table 2 for a list of modules and their associated output file names.) The names of these output files should be included in the module descriptions in the appendix.

4.4 Plot Output from TSC

Plots that show the plan and elevation views of the tokamak device being analyzed can be created by TSC. The tokamak device views are obtained by invoking the plotting option in the CONTRL namelist (i.e., IPLOT = 1). The file name for the plot can be partially controlled by specifying up to four characters for the variable PLTNAM (e.g., PLTNAM = "DCT8"). These four characters will be the middle four characters of the plot file name. The first two characters will be "F4" and the last two characters will be "OX". In any case, the plot file name will be displayed in the terminal log of execution and is included in the complete output file.

The NETPLOT utility program is normally used to recover the plot file information. The NETPLOT command line used to recover the plot files is

netplot <plot file name> site = <user site designation> (14)

5. LOCAL FILE AREA CLEANUP

An important part of using the NMFECC system is maintaining an orderly local file area. In using the TSC, the user is responsible for saving any files he may wish to keep. The TSC will overwrite any output files with the same names. The program does not save any permanent files. A useful procedure is to maintain all the user-supplied input files together with the TSC execution files in the TSCDLIB library file. Output and plot files that the user wishes to save should be saved by the user using FILEM. Any unnecessary files should be removed from the user's local file area using the DESTROY utility program.

6. REFERENCE CASES

A number of reference cases have been developed for various tokamak devices. The input files for these reference cases have been included in the TSCDLIB library file and should be used as the starting point for developing new cases. These reference cases do not necessarily accurately represent the devices as reported in the various FEDC reports.

6.1 FED-Baseline Reference Case

The input for the Fusion Engineering Device (FED)-Baseline reference case is labeled FEDINDT. This input file is based on the FED-Baseline studies reported in ref. 1 and updated in ref. 2. However, several changes have been incorporated to take advantage of new TSC features and advances in design philosophy. This file should give a good start for analysis of intermediate-size tokamak reactors with superconducting TF coils and significant fusion power.

6.2 DCT Reference Case

The DCT reference case, labeled DCTGNDT, is based on the DCT-8 studies reported in ref. 3. Substantial changes have been incorporated due to improvements in TSC. This case should be a good starting point for a small to intermediate tokamak reactor with copper insert TF coils used to enhance the field on axis.

6.3 Copper Coil Reference Case

The copper coil reference case, labeled FEDRGNT, is based on the FED-R studies reported in ref. 4. This concept is only one of several proposed copper TF coil tokamaks. This case should provide insight into the use of TSC in analyzing copper coil devices, but substantial changes will probably be required to model other suggested designs due to the wide variances among copper coil designs.

7. SAMPLE EXECUTION

A sample execution is provided in Tables 3 and 4 to give the user a basis for study of the features. Table 3 gives the history of the execution as seen from the user's terminal, while Table 4 is a complete listing of the output file. The sample case is the FED-Baseline reference case. A plan and elevation plot from this execution is included as part of the output in Table 4.

REFERENCES

1. C. A. Flanagan, D. Steiner, and G. B. Smith, *Fusion Engineering Device Design Description*, ORNL/TM-7948, vols. 1 and 2, Oak Ridge Natl. Lab., December 1981.
2. P. H. Sager et al., *FED-Baseline Engineering Studies Report*, ORNL/FEDC-82/2, Oak Ridge Natl. Lab., April 1983.
3. R. L. Reid, "Driven Current Tokamak (DCT) Scoping Study," *Nucl. Technol./Fusion*, 4(2), Part 3 (1983).
4. FEDC Staff, *FED-R: A Fusion Engineering Device Utilizing Resistive Magnets*, eds. D. L. Jassby and S. S. Kalsi, ORNL/FEDC-82/1, Oak Ridge Natl. Lab., 1982.

Table 3. Sample terminal output of sample execution

```
filem read 14362 .tscv3 tscdlib!end
 1. read tscdlib
file is on mass, read request queued.
make all requests, then enter 'end' to retrieve files from mass or tape.
 1. read tscdlib
rds

 all done
lib tscdlib!x all.!end
d 10/12/83 07:10:02 014362

 all done
tscx i=fedindt
  ...cpu=       0.0 sec, io=       0.0 sec, sys=       0.0 sec...
 Input is coming from file 'fedindt '
 Begin execution of the entire TSC.
 Executing subroutine physic
 Executing subroutine fws
 Executing subroutine induct
  * VSEC: insufficient volt seconds for start up. *
 Configuration plot in file 'f4fed10x'
 Block data written to file 'fedblk  '
 Output is collected on file 'fedout  '
  ...cpu=       4.3 sec, io=       5.9 sec, sys=       0.2 sec...
      5 lines (  80a)
ok. fedout     mersed
   2207 lines ( 136s)
 Execution of TSC modules selected is complete
  ...cpu=       4.3 sec, io=       6.6 sec, sys=       0.2 sec...
STOP
```

Table 4. A complete listing of the output file

```
********************************** maintyp **********************************

   TSC  --- Tokamak Systems Code ---  VERSION 3.1, 9/7/83
  ...cpu=       0.0 sec, io=       0.0 sec, sys=       0.0 sec...
Input is coming from file 'fedindt '
Executing subroutine physic
Executing subroutine fws
Executing subroutine induct
  * VSEC: insufficient volt seconds for start up.
Configuration plot in file 'f4fed10x'
Block data written to file 'fedblk  '
Output is collected on file 'fedout  '
  ...cpu=       4.4 sec, io=       4.3 sec, sys=       0.2 sec...

********************************** phytyp ***********************************


                         time sequence (sec)

   ramp   oh swng  beamht  burn    quench

  30.00    6.00    6.00  100.00   10.00


general input data :

  plasm shape        =       0.3       num. neutral beams    =       0.0
  rf                 =       1.0


plasma input :

  plasma radius (m)  =     1.300       safety factor         =     3.200
  aspect ratio       =     3.850       impurity z            =     8.000
  elongation         =     1.600       zeff                  =     1.500
  beta               =     0.052       gamma (res loss)      =     0.505
  field on axis (t)  =     4.641       plasma int ind (li)   =     1.500
  ion temp (kev)     =    10.000       scrape of layer (m)   =     0.200
  ele temp (kev)     =    10.000       ip factor             =     1.298
  ripple             =     0.830
  vert. field (t)    =     0.750

plasma output :

  major radius (m)   =     5.005       plasma-crnt-hb (ma)   =     6.505
  plasma height (m)  =     2.080       plasma-crnt-lb (ma)   =     5.837
  plasma volum (m3)  =   267.142       plasma volt-burn (v)  =     0.064
  plasma ind (h)     =1.2217e-05       plasma res-burn (ohm) =9.7783e-09
  ion density (/m3)  =1.2071e+20       beta poloidal         =     1.983
  ele density (/m3)  =1.2999e+20       beta poloidal/ar      =     0.515
```

impurity concent.	=	0.009	ind volt (sec)	=	79.469
impurity z	=	8.000	resis. volt (sec)	=	15.495
zeff	=	1.500	heating volt (sec)	=	0.000
			start-up volt (sec)	=	94.964

ntau (sec/m3)	=	2.5783e+20	fueling rate (d+t/sec)	=	1.6258e+22
taue (sec)	=	1.983	burn rate (d+t/sec)	=	3.1844e+20
taue-emp (sec)	=	2.417	fractional burn-up	=	0.0196
taue-tp (sec)	=	0.000	tritium flow (g/sec)	=	0.0405
taup (sec)	=	1.983	tritium burn (g/sec)	=	0.0008
			deuterium flow (g/sec)	=	0.0270
			deuterium burn (g/sec)	=	0.0005
sigv fact.	=	1.448			
time fact.	=	2.201			
brem. fact.	=	1.280			

quasi-steady state heating (mw)	=	27.887
heat capacity/heating time (mw)	=	26.947
peak heating power (mw)	=	54.834
beam energy (kev)	=	0.000
tmax (kev)	=	4.800

plasma edge neu. load (mw/m2)	=	1.05
fusion power (mw)	=	448.93
alpha (mw)	=	89.28
ohmic (mw)	=	0.33
brems. (mw)	=	14.63
ploss (mw)	=	66.88
aux. power (mw)	=	-8.09
q	=	ignited
ignition margin	=	1.10

plasma boundary locations

x	y	x	y	x	y
6.305	0.000	6.278	0.325	6.199	0.643
6.072	0.944	5.906	1.223	5.710	1.471
5.494	1.683	5.268	1.853	5.042	1.978
4.825	2.054	4.621	2.080	4.436	2.054
4.272	1.978	4.130	1.853	4.011	1.683
3.913	1.471	3.836	1.223	3.777	0.944
3.737	0.643	3.713	0.325	3.705	0.000
3.713	-0.325	3.737	-0.643	3.777	-0.944

3.836	-1.223	3.913	-1.471	4.011	-1.683
4.130	-1.853	4.272	-1.978	4.436	-2.054
4.621	-2.080	4.825	-2.054	5.043	-1.978
5.268	-1.853	5.494	-1.683	5.710	-1.471
5.906	-1.223	6.072	-0.944	6.199	-0.643
6.278	-0.325	6.305	0.000		

********** fwstyp **********

component	inb'd	outb'd
vol.heating rate (mw/m**3)		
first wall	: 4.6881e+00	1.0441e+01
blk shield	: 6.8008e+00	1.0260e+01
dewar	: 2.4497e-03	1.2679e-07
t.f. coil	: 2.0650e-03	1.0534e-07
power deposition (mw)		
first wall	: 2.3927e+01	8.6835e+01
blk shield	: 6.0839e+01	2.9295e+02
t.f. coil	: 1.9910e-02	9.6012e-07
neutron flux E>0.1 Mev (neutron/m2-sec)		
first wall	: 1.5732e+18	1.7959e+18
blk shield	: 1.0812e+18	1.4783e+18
dewar	: 1.8829e+15	2.1233e+12
t.f. coil	: 5.9768e+14	2.8196e+10
atomic displacement per atom (over life)		
t.f. coil	: 9.8882e-04	4.2994e-08
dose rate to tf	2.4498e+09	1.1132e+05
bio shut down dose rate (mili rems/hr)		2.5060e+00
bulk shield thickness (m)	6.0100e-01	1.2740e+00
heat dep rate	: 0.	0.
dose	: 0.	0.
shut down d r	: .	0.

```
neutron wall loading at the first wall (Mw/m**2)
              : 6.9609e-01

total weight (kg)
               : 0.

bulk shield cost (m$)
                 0.                    0.
total wall power deposition (mw)

  first wall    = 1.1076e+02
  blk shield    = 3.5379e+02
  t.f.coil     = 1.9911e-02

total cost (m$)

  blk shield     = 1.3044e+02
```

FIRST WALL-SHIELD SCHEMATIC (OPTION 2)

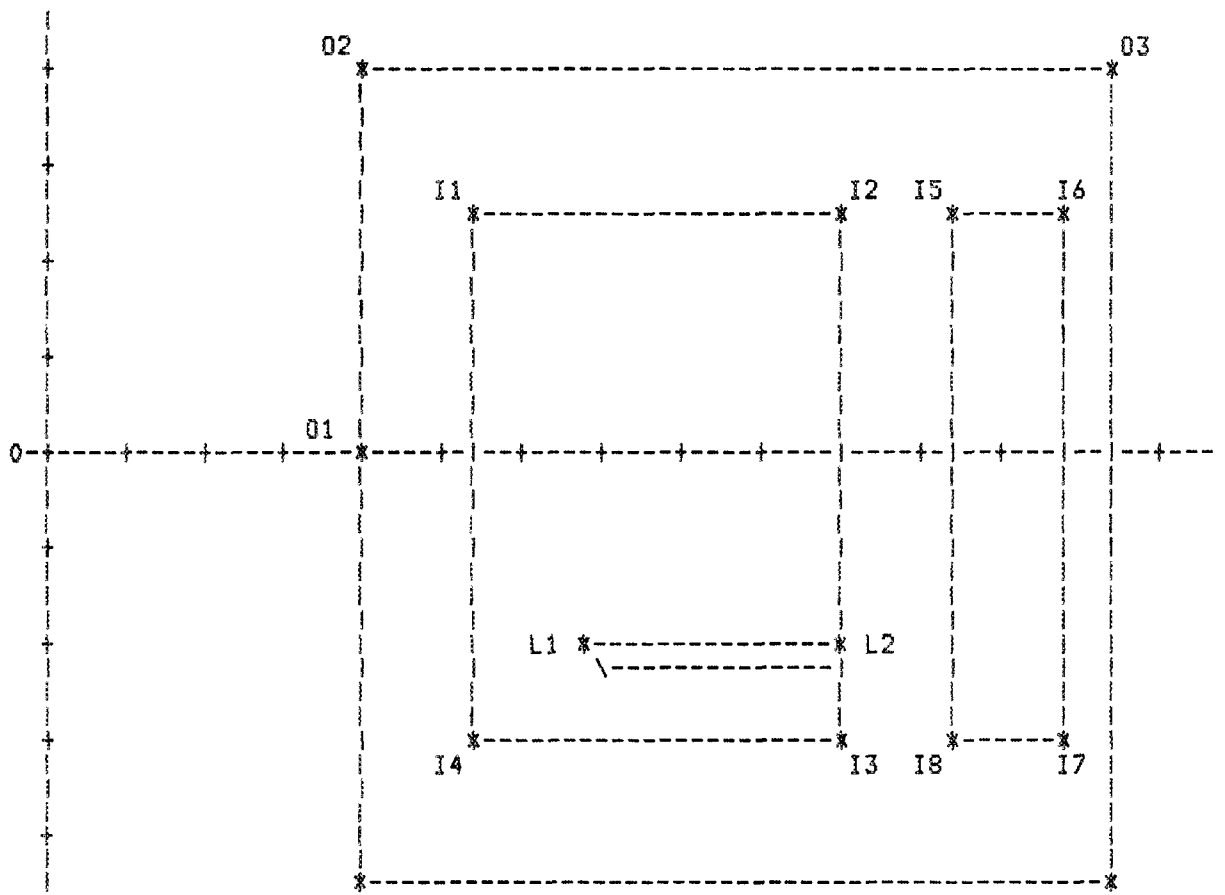

```
        |                 O5                                                  O4
        +
        |
        |
```

torus geometry coordinates (see above schematic)

```
        o1            o2            o3            o4            o5
  [ 2.85, 0.00] [ 2.85, 3.60] [ 7.93, 3.60] [ 7.93,-4.15] [ 2.85,-4.15]

        i1            i2            i3            i4            i5            i6            i7            i8
  [ 3.50, 2.28] [ 6.50, 2.28] [ 6.50,-2.87] [ 3.50,-2.87] [ 7.93, 2.28] [ 7.93, 2.28] [ 7.93,-2.87] [ 7.93,-2.87]
```

********** tftyp **********

TF COIL SCHEMATIC

```
        |
        |<----- R3 ------.---------->          .
   |    |             .      *      .  . .  . .      .
   |    |            .    .   P3                .    .
   |    |           .    .                     .   *    .
   |    |          .    .      O               P2  .    .
   |    |          .    * P4    C3                  .  <--.--- TF COIL C/L
   |    |          .    .                              .     .
 HMAX   |          .    .                              .     .
   |    |          .    .                            -->.     .<--- TF
   |    |          .    .            O                   .     . THICKNESS
   |    |          .    .             C2                   .    .
   |    |          .    .                                  .    .
   |    |<-- R1 ----.->  .                                  .    .
   |    |          .    .  C1                          P1   .    .
   V----|-----------.    .---O-------------------------------*    .-----
        |
        |<------------------------------ R2 ------------------>
```

----- Superconducting TF coils -----

tf coil data for - 10. tf coils a/r = 3.850 a(m)= 1.300 b(m)= 2.080

horiz design spaces(m) - outbd = 0.010 inbd = 0.180 dewar = 0.200
wedge fraction = 1.00

tf coil design allowables:
 ripple = 0.830
 conductor strain = 8.6500e-04 case stress (psi) = 3.1000e+04
 cond moduli (psi) = 1.7000e+07 case moduli (psi) = 2.8000e+07

structure-to-conductor ratio = 0.575
cond current density (a/cm2) = 2200.0

```
overall current density =       1396.6
field on axis (t) =              4.641

tf coil area (m2)=   0.832
 thicknesss =          0.628   delta cs =              0.121
 inside half width =   0.765   outside half width =   0.561   corner cut =0.000
 tma turns =    116.141
 cal ripple =     0.830
 ac loss su (kw) =  61.652
 ac loss sd (kw) =  20.562
 ac loss (kw) =   3.786
 max field(t) =  10.220

 stored energy/coil (gj) =   2.405
 mean coil circum. (m) =    33.717

coil geometry (measured from torroidal axis to c/l of windins, see above schematic)

 inner leg radius, r1 (m)           =  2.039
 outer leg radius, r2 (m)           = 10.498
 max hight, hmax (m)                =  5.971
 radius to max hight, r3 (m)        =  5.287
 clear bore (m)                     =  7.432
 clear vertical bore (m)            = 10.915


coil inner surface dimensions (see above schematic)

 [ x1(1) , y1(1) ]  [ x1(2) , y1(2) ]  [ x1(3) , y1(3) ]  [ x1(4) , y1(4) ]

 [  10.18,   0.00]  [   8.51,   4.26]  [   3.53,   5.29]  [   2.35,   3.50]


center of tf coil arces (see above schematic)

 [ xc(1) , yc(1) ]  [ xc(2) , yc(2) ]  [ xc(3) , yc(3) ]  [ xc(4) , yc(4) ]

 [   3.94,   0.00]  [   5.29,   1.25]  [   4.31,   3.50]  [1000.00,   0.00]


 cond strain =  0.          case stress (psi) =0.
 cond area (m2) =   0.528   cond current (ka) =1.1614e+04   no.turns =     1.

hoop tension (mlbs) =   0.000  (   0.000 - mn)
cent. force (mlbs) =   65.647  ( 292.128 - mn)
hoop stress (psi) =0.


total resistivity (ohm-m) = 0.          resistive power (mw) =       0.


total tf cost (m$) = 163.408
         cond cost = 142.040   unit cost ($/kg) = 105.00
         case cost =  21.368   unit cost        =  26.00

icss cost =  17.825   unit cost        =  26.00
```

```
   weight per coil (kg*1e6) =  0.217
              cond weight =  0.135   density (kg/m3) = 8941.00   vftf = 0.15
              case weight =  0.082   density         = 8027.00
              icss weight =   0.686

     weight per coil (mlbs) =  0.479
              cond weight =  0.298   density (lb/in3) =   0.32   vftf = 0.15
              case weight =  0.181   density         =    0.29


----- cryostat data -----

   cryostat radius (m) =  12.012
          cryostat height        (m) =  19.570
          cryostat cost (m$)=  19.279


----- bucking cylinder data -----

   mod of elast (psi) = 3.3000e+07   fraction of cent. force =   1.15
   yld str (psi) =      6.0000e+04   weight (kg) =  2.5162e+05
   poisson ratio =       3.000e-02   cost (m$) =     6.54

   inside radii (m) =        1.470   bearing pressure (psi) =       6.449e+03
   thickness (m) =           0.256   bucking strs, capped, (psi) = 0.
   sizing criteria = bucking stress bucking strs, open, (psi) =   3.3815e+04
```

********** pftyp **********

pf coils

coil	locate	current (ma)	current/turn (a)	turns	j (amp/cm2)	* r (m)	** zpf (m)	wtc (kg)	wts (kg)	cost (m$)
inside	1&1	4.22	117273.16	36.00	1500.00	3.85	4.07	61287.91	0.00	1.84
inside	1&1	3.69	119036.04	31.00	1500.00	3.05	-3.77	42452.25	0.00	1.27
outside	2&3	-6.06	-49670.95	122.00	1400.00	9.49	4.75	92855.09	144122.10	22.32
outside	2&3	-9.08	-49909.30	182.00	1400.00	9.49	-5.70	139186.24	216033.53	33.45
outside	2&4	-12.34	-49956.59	247.00	1500.00	1.16	0.00	21542.25	0.00	4.31
oh sol.	4&4	-23.31	-49905.61	467.00	1500.00	1.16	3.20	40280.78	0.00	8.06
oh sol.	4&4	-23.31	-49905.61	467.00	1500.00	1.16	-3.20	40280.78	0.00	8.06
		82.01						437885.30	360155.63	79.31

* r is measured from the toroidal axis
** zpf is measured from horizontal mid-plane

********** rbttyp **********

RADIAL BUILD
(m)

	Thickness	Radius
Device Centerline	0.0	0.000
Bore	0.973	0.973
O. H. Solenoid	0.371	1.345
Gap	0.125	1.470
Bucking Cylinder	0.256	1.725
TF Coil	0.628	2.353
Circle-Trapezoid Space	0.121	2.474
Cryostat	0.200	2.674
Gap	0.180	2.854
Shield - inboard	0.601	3.455
Gap	0.000	3.455
First Wall - inboard	0.050	3.505
Scrape Off	0.200	3.705
Plasma C/L	1.300	5.005
Plasma Edge	1.300	6.305
Scrape Off	0.200	6.505
First Wall - outboard	0.150	6.655
Gap	0.000	6.655
Shield - outboard	1.274	7.929
Lead	0.000	7.929
Gap	2.055	9.984
Cryostat	0.200	10.184
TF Coil	0.628	10.812
Cryostat	0.200	11.012

********** mtxtyp **********

inductance matrix

circuit	1	2	3	4	5	oh	plasma
1	1.8133e-02	4.0010e-04	1.4353e-02	6.5210e-03	2.0164e-03	1.1254e-02	8.7570e-05
2	4.0010e-04	1.0050e-02	2.9415e-03	1.0618e-02	1.6862e-03	1.1348e-02	5.5759e-05
3	1.4353e-02	2.9415e-03	6.3432e-01	9.0251e-02	6.0705e-03	2.2496e-02	4.6146e-04
4	6.5210e-03	1.0618e-02	9.0251e-02	1.3319e+00	7.9823e-03	3.0807e-02	5.9304e-04
5	2.0164e-03	1.6862e-03	6.0705e-03	7.9823e-03	8.6738e-02	4.3056e-02	1.2220e-04
oh	1.1254e-02	1.1348e-02	2.2496e-02	3.0807e-02	4.3056e-02	4.0405e-01	3.0240e-04
plasma	8.7570e-05	5.5759e-05	4.6146e-04	5.9304e-04	1.2220e-04	3.0240e-04	8.5740e-06

********** vstyp **********

total volt-second summary

```
|-------------------------------------------------------------|
| insufficient volt seconds for start up by    5.56 volt-sec  |
|-------------------------------------------------------------|
```

max. burn time (sec) = -81.01

	volt-sec start-up	volt-sec burn	volt-sec total
ef :	-59.22	-0.41	-59.63
oh :	-30.18	0.00	-30.18
total:	-89.40	-0.41	-89.81

summary of volt-second by circuit during start-up

circuit	
1	4.84
2	3.35
3	-23.64
4	-31.55
5	-12.21
oh	-30.18
	-89.40

wave forms
current per turn (ka)

time (sec)

circuit	0.00	30.00	36.00	42.00	142.00	152.00
1	0.00	49.37	118.91	104.61	117.27	
2	0.00	47.73	121.30	107.85	119.04	
3	0.00	4.10	-32.53	-47.14	-49.67	
4	0.00	4.94	-31.54	-48.26	-49.91	
5	0.00	49.96	-49.96	-49.96	-49.96	
oh	16.47	49.91	-49.91	-49.91	-49.91	
plasma(ma)	0.00	0.00	5.84	6.50	6.50	

********** nbtyp **********

No neutral beams are specified for this case.

********** rftyp **********

Preheat using ECRH

injected power (mw)	=	1.00	efficiency	=	0.19
input power (mw)	=	5.25	frequency (Ghz)	=	130.087
cost (M$)	=	7.04	unit cost ($/watt)	=	7.04

Bulk heating using ICRH

injected power (mw)	=	50.01	efficiency	=	0.55
input power (mw)	=	90.76	frequency (Ghz)	=	0.028
cost (M$)	=	63.63	unit cost ($/watt)	=	1.27

TOTAL RF SYSTEM COST ($M) = 70.67

********** nbsetyp **********

No neutral beams are specified for this case.

********** eletyp **********

pulse electrical

coil	1	2	3	4	5	oh
max mva of power supply	47.96	28.75	246.97	479.76	186.59	642.32
mj of power supply	287.81	160.01	806.45	1650.30	175.34	700.79
max mw of burn supply	31.87	22.35	1.18	1.52	0.41	0.33
cost of power supply	7.16	5.28	8.21	15.42	5.76	18.28
max. resis. loss (mw)	32.54	23.09	0.41	0.41	0.41	0.41

max generator (mva)	=	1619.43
max stored energy (gj)	=	3.78
total resistive losses (mw)	=	56.81
mg average power (mw)	=	29.29
vol. mg blds. (m3)	=	18388.71
vol. pf power conv. blds. (m3)	=	68990.28
eqv. floor space mgb (m2)	=	696.68
eqv. floor space pcb (m2)	=	6899.03
cost of energy storage (m$)	=	27.06
cost of power supplies (m$)	=	60.11
total electrical cost (m$)	=	87.17

********** rbtyp **********

1 REACTOR BUILDING

input :

neutron flux to envir. (neut/m2-sec)	=	1.900e+06
e-fold of building wall (m)	=	0.145
neutron flux thru tf outer dewar(neut/m2-sec)	=	2.123e+12
tf outer radius (m)	=	11.012
tf coil max height (m)	=	12.570
outboard shield radius (m)	=	7.929
right of way (m)	=	5.000
transportaion clearance (m)	=	1.000
device extention (m)	=	0.000
vacuum pump hatch clearance (m)	=	5.800
crane clearance (m)	=	5.100
structural clearance - roof (m)	=	0.000
cryostat clearance - bottom (m)	=	3.000

```
cryostat clearance - top (m)                    =     3.600
shield sector width (m)                         =     4.900
shield sector length (m)                        =     5.075
shield sector height (m)                        =     7.751
shield sector weight (kg)                       =     0.000
foundation thickness (m)                        =     2.000
bucking cyclinder height (m)                    =    10.200
pf coil radius (m)                              =     9.897


output :

RECTANGULAR REACTOR BUILDING

neutron flux to building wall (neut/m2-sec)     = 2.354e+11
reactor building wall thickness (m)             =     1.700
reactor building length (m)                     =    61.652
reactor building width (m)                      =    51.025
reactor building height (m)                     =    39.171
reactor building volume (m3)                    =123222.041

********************************** tfptyp   **********************************


1                    superconducting coil p.s. data

      ettfmj,stored energy of tf coils, mj        0.2405e+05
      itfka, tf coil current,ka                    25.00
      ntfc, number of tfcoils                      10.00
      vtfskv, max. voltage across coil sec,kv      2.000
      tchghr, tf coil charge time, hours           4.400

      total inductance of tf coils, henries        76.96
      total resistance of tf coils, ohms          0.0000
      inductance per coil, henries                 7.696
      total required charging voltage, volts       173.9
      number of dc circuit breakers                10.00
      cost of dc circuit breakers, $million       0.9146

      number of dump resistors                     40.00
      resistance of a dump resistor,ohms          8.0000e-02
      peak power to a dump resistor, mw            12.50
      energy to a dump resistor, mj                601.2
      l/r time constant of tf coils,seconds        96.20
      cost of dump resistors, $million             1.517

      number of power modules                      10.00
      power module voltage, volts                  91.28
      power module current, ka                     5.250
      power module rated output, kw                479.2
      ac power for charging tf coils, kw           4792.
      rpower,tf coil resistive power, mw           1.310
```

xpower,tf coil inductive power, mw	3.037
cost of tf supplies, $million	0.5538
al bus design current density, ka/sq.cm	0.1000
aluminum bus section area, sq. cm	250.0
average length of bus run, meters	200.0
total length of tf bussing, meters	2000.
total resistance of tf bussing, ohms	2.0960e-03
voltage drop across tf bussing, volts	52.40
cost of tf bussing, $million	2.430
cost of tf load control ctr. $million	7.9189e-02
cost of control & instr. $million	0.6500
ctfpcm, total cost of tf power conv. $m	6.223
drarea, dump resistor area on roof,sq.m	1429.
tfcfsp, tf power conv floor space, sq.m	252.1
tfcbv, tf power conv blds volume, cu.m	1512.

tf coil power conv. summary

total tf coil power conv. cost,$million	6.223
total tf coil msf energy demand,mj	0.0000
total tf coil msf peak xpower demand,mw	3.796
total tf coil ac rpower fltp demand, mw	1.637
total tf coil pwr conv. floor space,sq.m	252.1
total tf coil pwr conv.blds. volume,cu.m	1512.

********** factyp **********

1 STRUCTURES AND SITE FACILITIES

discription	dimensions l*w*h (m)	volume (m**3)	floor area (m**2)	cost ($M)
reactor building	61.7* 51.0* 39.2	123222.*	3146.	49.3
hot cell facility	64.2* 40.1* 33.5	86360.*	2945.	34.5
intake structures	15.0* 15.0* 6.0	1350._	225.	0.1
water treatment building	25.0* 25.0* 10.0	6250._	625.	0.5
recirculation structures	45.0* 15.0* 10.0	6750._	675.	0.5
tf coil elect. equip.	0.0* 0.0* 6.0	1512.*	252.	0.1
oh and pf electrical equip.	0.0* 0.0* 10.0	68990.*	6899.	5.5
bulk heating elect. equip.	26.0* 16.0* 10.0	4160._	416.	0.3
motor gen. flywheel blds.	0.0* 0.0* 26.4	18389.*	697.	1.5
cryogenic refrig. blds.	40.0* 30.0* 10.0	12000._	1200.	1.0
tritium processing building	58.0* 30.0* 30.0	52200._	1740.	14.1
ventilation building	58.0* 25.0* 30.0	43500._	1450.	11.7

radioactive waste building	40.0*	40.0*	10.0	16000.*	1600.	4.3
control room building	30.0*	15.0*	10.0	4500.*	450.	0.0
diesel generator building	32.0*	16.0*	10.0	5120.*	512.	0.4
administration building	90.0*	60.0*	10.0	54000.*	5400.	4.3
mockup and shop building	159.9*	159.9*	7.4	189760.*	25561.	15.2
control room tunnel	0.0*	0.0*	0.0	0.*	0.	0.0
ventilation stack	0.0*	0.0*	90.0	0.*	0.	2.0
totals				694063.	53343.	145.5

site improvements	12.3
	*****
structures and site facilities total	157.8

* - rectangular reactor building using supplemental information.
* - hot cell facility scaled using device deminsions
* - copper and tf coil building volume and floor area calculated in - TFCONV -
* - ohmic heating and pf coil building volume and floor area calculated in - ELEPOW -
* - motor generator flywheel building volume and floor area calculated in - ELEPOW -
* - control room included in administration building.
* - mockup and shop volume using fraction of hot cell facility and reactor building.

********** trittyp **********

fuel processing system

input :

fusion power (mw)	=	448.927
particle confinement time (sec)	=	1.983
particle recycle	=	0.800
burn time (sec)	=	100.000
time between cycles (sec)	=	52.000
trit. fract. in d-t	=	0.500
ion density (ions/m**3)	=	1.207e+20
plasma volume (m**3)	=	267.142
cryo pump regen period (hr)	=	1.000
assum. post burn temp.(k)	=	573.000
post burn press. (torr)	=	1.330e-03
beam inj. time (sec)	=	6.000
beam power (mw)	=	54.834
beam energy (kev)	=	0.000

results :

cycles/day	=	568.421
availability	=	0.169
trit. burn fraction (including recycle)	=	0.082
trit. burned/cyc (g/cyc)	=	0.079
trit. burned/day (g/d)	=	45.162
trit. in gas chrg/cyc (g/cyc)	=	0.081
trit. fueled/cyc (g/cyc)	=	0.892
trit. fueled/day (g/d)	=	507.221
trit. fueled/yr (g/yr)	=	31287.921
trit. decay loss/year (g/yr)	=	87.185
trit. consumed/year (g/yr)	=	1481.013
deut. burned/cycle (g/yr)	=	0.053
deut. burned/day (g/d)	=	30.259
deut. consumed/yr (g/yr)	=	1866.502
deut. inj.(beams)(g/d)	=	0.000
deut. pumped in nb/d (g/d)	=	0.000
deut. input/day (g/d)	=	370.540
deut. needed/day (g/d)	=	370.540
deut. needed/cycle (g/cyc)	=	0.652

atmospheric detritiation system

input :

max cred.trit. release(g)	=	10.000

results :

	reactor buildings	hot cell facility	tritium processing buildings	radwaste buildings
building volume (m**3)	123222.	86360.	52200.	16000.
allow. trit. conc. (uCi/m**3)	50.	50.	50.	50.
ds removal eff.	0.99	0.99	0.99	0.99
time for removal (hr)	72.0	72.0	24.0	72.0
at. vol. flow (% bld.vol/min)	0.226	0.234	0.737	0.273
cleanup flow rate (m**3/sec)	4.636	3.369	6.416	0.729
trit. vented during proc. (Ci)	0.000	0.000	0.009	0.000
trit. released after proc. (Ci)	6.161	4.318	2.610	0.800
detrit. sys. cost (K$)	11360.4	9085.0	14261.9	3112.5

Total detrit. system cost (K$)	=	37819.8

tritium inventory

pumps (g)	=	21.16
storage (g)	=	1354.86
surge tank (g)	=	2.31

fuel cleanup (s)	=	45.08
separation unit (s)	=	100.79
breeding blanket (s)	=	0.00
blanket recovery (s)	=	0.00
pellet fueler (s)	=	32.68
trit. neutral beam (s)	=	0.00
deut. neutral beams (s)	=	0.00
total (s)	=	1556.88

cost summary (K$)

tritium receiving system	=	200.0
shipping containers	=	120.0
deuterium storage	=	2269.4
tritium storage	=	3387.2
fuel cleanup	=	1640.0
isotopic separation system	=	3601.1
analysis system	=	1600.0
tritium waste treatment system	=	1200.0
glove box detrit. system	=	1600.0
tritiated water recovery unit	=	4000.0
tritium waste processing sys.	=	1300.0
building detrit. systems	=	37819.8
tritium monitors	=	2000.0
tritium systems control	=	5820.0
Total tritium system cost (K$)	=	67657.5

********** vactyp **********

torus evacuation system parameters

gas load-divertor (pa-m**3/s)	=	1.29e+01
divertor pump pressure (pa)	=	0.10e+00
divertor pump speed (m**3/s)	=	0.13e+03
divertor pump speed-dt (m**3/s)	=	0.12e+03
divertor pump speed-he (m**3/s)	=	0.11e+02
post burn gas load (pa-m**3)	=	0.14e+03
total pumping speed needed (m**3/s)	=	129.088
total He pumping speed needed (m**3/s)	=	10.541
evacuation volume (m**3)	=	499.1
post burn gas temperature (k)	=	573.00
post burn gas pressure (pa)	=	2.76e-01
preburn pressure (pa)	=	1.33e-03
post burn he pressure (pa)	=	0.23e-01

```
  preburn he pressure (pa)                    =    0.33e-03
  pump capacity (pa-m**3)                     =    5.00e+03
  pump loading factor                         =    0.83
  duct conductance constant                   =    0.86
  outgas rate (pa-m**3/s)                     =    0.
  outgas speed (m**3/s)                       =     0.0
  number of ducts                             =     10.00
  needed speed of duct and pump (m**3/s)      =    1.29e+01
  duct diameter (m)                           =      1.20
  number of duct bends                        =        2.
  duct length (m)                             =     10.01
  duct conductance (m**3/s)                   =     31.11
  rated speed/pump (m**3/s)                   =      20.0
  achieved speed of duct and pump (m**3/s)    =    12.174
  minimum pump speed per duct (m**3/s)        =    22.062
  minimum duct diameter (m)                   =      1.28
  tot He pumping speed needed (m**3/s)        =    1.05e+01
  minimum He pump speed per duct (m**3/s)     =    1.09e+00
  minimum surface area per pump (m**2)        =    2.1747
  fixed regeneration time (hours)             =      1.00
  read. pump capacity (pa-m**3)               =    0.
  regeneration period (hours)                 =      0.00
  cost - main vacuum pumps  ($)               =    4.41e+06
  cost - backing pumps ($)                    =    4.41e+06
  cost - hard seal metal valves ($)           =    5.00e+06
  total vacuum system cost ($)                =    1.38e+07


output :
  governing mode of operation is pumping the limiter during burn
  pump type                                   =  turbo
  gas load-divertor (pa-m**3/s)               =    12.909
  divetor pump pressure (pa)                  =     0.100
  post burn gas load (pa-m**3)                =     0.000
  total pumping speed needed (m**3/s)         =   129.088
  number of ducts needed                      =    10.000
  conductance of each duct (m**3/s)           =    31.114
  rated speed/ pump (m**3/s)                  =    20.000
  needed speed of duct and pump (m**3/s)      =    12.909
  achieved speed of duct and pump (m**3/s)    =    12.174
  minimum pump speed per duct (m**3/s)        =    22.062
  minimum diameter with psp speed (m)         =     1.275
  cost of vacuum system ($)                   =    1.38e+07
  total He pumping speed needed (m**3/s)      =    10.541
  minimum He pump speed per duct (m**3/s)     =     1.087
  minimum surface area per pump (m**2)        =     2.175


shielded vacuum duct output:
  duct length (m)                             =     10.01
  shield thickness (m)                        =      0.42
  shielded duct cost (m$)                     =     26.40

********************************** fueltyp  **********************************
```

```
****** fuel system output data ******
        a,  plasma minor radius, meters            1.300
        ni, plasma ion density, no./cu meter         1.2071e+20
        ti, plasma ion temperature, kev            10.00
        tburn,  burn time, seconds                 100.0
        tfulc, tritium injected per cycle,grams      0.8923
        dasofu, distance between shield & coil,m     2.255
        tfthk, tf coil thickness, meters           0.6275

        number of injectors                     3.000
        number of nozzles                       10.00
        td pellet diameter, mm                  4.000
        td pellet weight,grams                 1.3024e-02
        pellet rate, no. per sec                 1.144

        pellet velocity, meters per sec.           1216.
        pellet penetration, meters               0.2925
        pellet dispersion angle, degrees           1.000
        shielded pellet tube length, meters          3.883
        electric power for injectors, kw           3.718

        vacuum requirement, liters per min.          586.5
        electric power for vacuum, kw            0.8798
        ln2, liquid nitrogen refrigeration,watts     72.72
        lhe, liquid helium refrigeration, watts      18.24
        cfuels, total fuel system cost, $million     2.809
```

********** megtyp **********

Maintenance equipment costs

item description	unit cost K$	number for reactor blds.	number for hot cell facility	total cost K$
closed circuit tv	24.20	6	10	387.20
cell lighting and audio sys.	435.60	1	1	871.20
transfer lock	1452.00	1	0	1452.00
decontamination and waste handling	3630.00	0	1	3630.00
welder-cutter; pipes < 2 in.	60.50	2	2	242.00
welder-cutter; pipes 2 - 6 in.	90.80	2	2	363.20
welder-cutter; pipes > 6 in.	151.30	2	2	605.20
end effectors	605.00	1	1	1210.00
sector module handling device	526.90	1*	0*	526.90
welder-cutter; structures and vacuum joints	605.00	1	0	605.00
transporter	242.00	1	0	242.00
subcomponent handling device	421.30	1	0	421.30

limiter blade handling device	543.40	1	0	543.40
movable manipulator sys.	1210.00	1	0	1210.00
in-vessel manipulator sys.	1210.00	1	0	1210.00
lifting fixtures, slings, etc.	302.50	3	1	1210.00
hand tools	605.00	1	0	605.00
leak detection sys.	1210.00	1	0	1210.00
periscope, liner, and shield	170.60	6	16*	3753.20
shielded window	292.80	10*	14*	7027.20
cranes 100 - 500 tonnes	1210.00	1	1	5508.16
cranes 50 tonnes	968.00	1	0	968.00
cranes 10 tonnes	186.30	0	10*	1863.00
cranes 5 tonnes	121.00	0	0	0.00
cranes 1 tonne	54.50	0	0	0.00
power arm manipulator (bridge mounted)	505.80	1	1	1011.60
mechanical msm (thru-the-wall)	121.00	2	20*	2662.00
mechanical msm (bridge mounted)	937.80	1	1	1875.60
robot arm (floor mounted)	121.00	0	1	121.00
shield plugs	605.00	1	0	605.00

---

reactor building maintenance equip. costs	20688.38	
hot cell facility maintenance equip. costs	21250.78	

TOTAL MAINTENANCE EQUIP. COSTS		41939.16

* - indicates that these items depend on device and plant parameters calculated by the program.
All other items are taken directly from input.

********** htstyp **********

********** heat transport system**********

****
heat load (cycle average)
****

first wall heat transport (mw)	=	72.8695
divertor/limiter heat transport (mw)	=	47.2554
divertor coil heat transport (mw)	=	0.0000
shield heat transport (mw)	=	232.7535
plasma heating heat transport (mw)	=	1.6087
vacuum pumping heat transport (mw)	=	5.2381
tritium process heat transport (mw)	=	11.6126
pf system heat transport (mw)	=	86.0968
tf helium refr. heat transport (mw)	=	14.2910
tf liq. nitrogen heat transport (mw)	=	0.0000
resistive tf coil heat transport (mw)	=	0.0000
facility heat transport (mw)	=	29.4130
total cooling tower heat transport (mw)	=	501.1386
cooling tower flow rate (kg/sec)	=	9799.7910

```
************
     cost
************
     first wall heat transport system (m$)          =      1.2362
     divertor/limiter heat transport system (m$)    =      0.8742
     divertor coil heat transport system (m$)       =      0.0000
     shield heat transport system (m1)              =      3.1302
     plasma heating heat transport system (m$)      =      0.0585
     vacuum pumping heat transport system (m$)      =      0.1505
     tritium process heat transport system (m$)     =      0.2844
     pf system heat transport system (m$)           =      1.6092
     tf helium refr. heat transport system (m$)     =      0.3358
     tf liq. nitrogen heat transport system (m$)    =      0.0000
     resistive tf heat transport system (m$)        =      0.0000
     facility heat transport system (m$)            =      0.5983
     primary heat exchangers (m$)                   =      4.7667
     intermediate heat exchangers (m$)              =      6.1789
     total cooling tower heat transport system (m$)=      10.2676
     total cost of heat transport system (m$)       =     29.4906


The cost of the magnet cooling system is currently calculated by
the HTS module.

     magnet cooling system cost (m$)                          =      11.7466


********************************** acptyp   **********************************


                    ac power system output data
               * inputs from other system code programs
               * outputs to other system code programs

     basemw, facility base power load, mw                        5.00
     efloor*,effective total floor space, sq.m              115677.22
     pkwpm2, power needed per floor area, kw/sq.m                0.15
     fcsht, total power to facility loads, mw                   29.41

     msmake*, power to msf units, mw                            29.29
     summax*, power to burn power supplies, mw                  56.81
     bdvmw*, power to bundle div. supplies, mw                   0.00
     wtfmw*, power to tf coil power supplies, mw                 1.64
     pheat*, power to plasma heating supplies, mw                0.00
     tfht*, power to cryogenic comp. motors, mw                 14.29
     vacmw*, power to vacuum pump motors, mw                     5.24
     htpmw*, power to hts pump motors, mw                       10.02
     fcsht, backup power to facility loads, mw                  29.41
     t2pmw*, power to tritium processing, mw                    11.61
     pacpmw*,total pulsed power system load, mw                151.25
```

hvlkv$,	pulsed power utility line voltage	500.00
n3pht,	number of 3 phase transformers	2.00
tmva,	max. mva of each transformer	100.00
pnbkrs,	number of 13.8kv circuit breakers	14.00
bkrmva,	short circuit mva of circuit breakers	1000.00
cphvsm,	cost of equipment on hv side, $m	2.47
ctranm,	cost of xformers & lightning protect.	3.77
cpmvsm,	cost of equipment on 13.8kv side, $m	1.72
cpacpm,	cost of pulsed power system, $m	7.95
fvlkv$,	facility power line voltage	138.00
ftmva,	max. mva of the facility transformer	30.00
fnbkrs,	number of 13.8kv circuit breakers	5.00
fbkmva,	short circuit mva of circuit breakers	500.00
cfhvsm,	cost of equipment on hv side, $m	0.34
cxfmrm,	cost of xformer & lightning protect,$m	0.52
cfmvsm,	cost of equipment on 13.8kv side, $m	0.41
cfacpm,	cost of facility ac power system	1.28

ac power summary

pacpmw*,	total pulsed power system load, mw (power to the heat transfer system)	151.25
hvlkv$,	pulsed power utility line voltage, kv	500.00
fcsht,	total facility power load, mw	29.41
fvlkv$,	facility power line voltage, kv	138.00
cpacpm,	cost of the pulsed power system, $m	7.95
cfacpm,	cost of facility ac power system, $m	1.28
c2dsm,	cost of 2 dg units(480v,2500kw ea.)$m	1.30
c4nbpm,	cost of 4 no break power supplies, $m	0.30
clvdsm,	cost of lv power distribution, $m	4.73
c1tgm,	cost of 1 tg unit(480v, 2500kw), $m	0.00
ctacpm*,	installed cost of ac power system, $m	15.56

********** iactyp **********

cost of the control building i&c hardware and software,
and the cost of the plasma diagnostics.

(scds--supervisory control and data system.)

process scds cost estimate

tcofph-	plasma heating scds cost, $m	1.41
tcofmc-	magnet systems scds cost, $m	3.52
tcofac-	ac power systems scds cost, $m	0.84
tcgnes-	power gen.& energy storage scds cost, $m	1.24

tcofrc-reactor comp. & structures i&c cost,$m	3.17
tcofcv-cryogenic & vacuum systems scds cost, $m	1.21
tcoffs-fueling & processing scds cost, $m	2.43
tcofht-heat transport systems scds cost, $m	1.26
tcofmn-facility & site mon. scds cost, $m	0.90
tcofbf-building facilities i&c cost, $m	0.83
tcofrh-remote handling sys. scds cost, $m	4.10
tcopsc-total cost of process scds , $m	20.92

plasma diagnostics cost estimate table

nohp-no. of diagnostic types in group k for the h2 phase
nodp-no. of diagnostic types in grp k added for the d2 phase
notp-no. of diagnostic types in grp k added for the td phase
tmcpdm-average cost of a diagnostic type in group k, $m
hpdscm-cost of diagnostics in group k for the h2 phase
dpdscm-cost of diagnostics in grp k added for the d2 phase
tfdscm-cost of diagnostics in grp k added for the td phase
fprodpar-fusion product particle diagnostics group

k	diag.grp	nohp	nodp	notp	tmcpdm	hpdscm	dpdscm	tpdscm	total
1	edensity	1	2	0	1.50	1.50	3.00	0.20	4.70
2	e.temp	2	1	0	1.30	2.60	1.30	0.20	4.10
3	ion temp	2	2	0	1.50	3.00	3.00	0.40	6.40
4	impurity	3	2	1	0.70	2.10	1.40	1.00	4.50
5	pwr loss	1	1	1	0.40	0.40	0.40	0.50	1.30
6	magnetic	3	1	1	0.30	0.90	0.30	0.40	1.60
7	p.instab	2	1	0	0.70	1.40	0.70	0.20	2.30
8	fprodpar	0	2	2	0.80	0.00	1.60	1.80	3.40
9	environ	3	2	1	0.70	2.10	1.40	0.80	4.30
10	miscel	4	2	3	0.40	1.60	0.80	1.30	3.70
	total cost of diagnostics for each phase using the default input table.					15.60	13.90	6.80	36.30

archiving computer hardware and software

hydrogen phase archiving,	$m	2.30
deuterium phase archiving,	$m	2.80
tritium phase archiving,	$m	3.20
Total archiving cost,	$m	8.30

total scds & plasma diagnostics cost summary
(through the tritium phase)

tcopsc-total cost of process scds cost,	$m	20.92
tcopds-total cost of plasma diagnostics,	$m	36.30
tcarch-total cost of archiving & processing,	$m	8.30
tcscds-total cost of diagnostics & scds,	$m	65.52

********** costtyp **********

cost account output file

c a p i t a l c o s t a c c o u n t s

09/11/84 [05:14:54]

account #	title	cost (million dollars)	
20010000	land & privilege acquisition	0.00	
20020000	relocation of buildings, utilities, highways, etc.	0.00	
20000000	land & land rights		0.00

c a p i t a l c o s t a c c o u n t s

09/11/84 [05:14:56]

account #	title	cost (million dollars)	
21010100	general yard improvements	0.00	
21010200	waterfront improvements	0.00	
21010300	transportation access (off site)	0.00	
21010000	site improvements & facilities		12.30

21020100	basic building structures		49.29		
21020200	buildings services		0.00		
21020300	containment structures		0.00		
21020400	hot cell facility		34.54		
21020000	reactor buildings			83.83	
21030100	basic building structures		0.00		
21030200	buildings services		0.00		
21030000	turbine buildings			0.00	
21040100	intake structures		0.11		
21040200	discharge structures		0.00		
21040300	unpressurized intake & discharge conduits		0.50		
21040400	recirculating structures		0.54		
21040500	cooling tower systems		0.00		
21040000	cooling system structures			1.15	
21050101	tf coil elect. equip. blds.	0.12			
21050102	ohmic heating and cryo pf coil elect.equip. blds.	5.52			
21050103	bulk heat elect. equip. blds.	0.33			
21050104	motor-generator-flywheel blds.	1.47			
21050100	basic building structures		7.44		
21050200	buildings services		0.00		
21050000	power supply & energy storage building			7.44	
21060101	cryogenic refrigeration blds.	0.96			
21060102	tritium processing blds.	14.09			
21060103	ventilation blds.	11.75			
21060100	reactor auxiliaries building(incl. switchgear bay)		26.80		
21060200	radioactive waste buildings		4.32		
21060300	tritium processing buildings		0.00		
21060400	control room buildings		0.00		
21060500	diesel generator buildings		0.41		
21060600	administration buildings		4.32		
21060701	shop and mockup blds.	15.18			
21060700	service buildings		15.18		
21060800	helium storage buildings		0.00		
21060900	miscellaneous structures & building work		0.00		
21060000	miscellaneous buildings			51.03	
21070000	ventilation stack			2.00	
21980000	spare parts allowance			0.00	
21990000	contingency allowance			0.00	
21000000	structures & site facilities				157.75

c a p i t a l c o s t a c c o u n t s

09/11/84 [05:14:57]

account #	title	cost (million dollars)		
22010101	breeding material(incl. tritium breeding)	0.00		
22010102	first wall & structural material	5.94		
22010103	attenuators, reflectors, & multipliers	0.00		
22010104	wall modifiers(coatings, liners, limiters, etc.)	2.69		
22010105	others	0.00		
22010100	blanket & first wall		8.63	
22010201	primary	0.00		
22010202	secondary	0.00		
22010200	shield		130.44	
22010301	toroidal field magnets with case	163.41		
22010302	copper insert magnets with case	0.00		
22010303	poloidal field magnets with case	79.31		
22010304	intercoil structure	17.82		
22010300	magnets		260.54	
22010401	beam heating(neutral, ion or electron)	0.00		
22010402	rf heating	70.67		
22010403	laser heating	0.00		
22010404	other heating systems	0.00		
22010400	supplemental heating systems		70.67	
22010501	reactor structure	6.54		
22010502	equipment support structure	0.00		
22010500	primary structure & support		6.54	
22010601	plasma chamber vacuum(incl. pumps/comp./pipe)	13.82		
22010602	magnet dewar vacuum(incl. pumps/comp./pipe)	0.00		
22010603	supplemental heating vacuum(incl. pumps/comp./pipe)	0.00		
22010604	direct convertor vacuum(incl. pumps/comp./pipe)	0.00		
22010605	reactor vacuum system(low grade)	0.00		
22010606	reactor vacuum wall	19.28		
22010607	shielded vacuum ducts	26.40		
22010600	reactor vacuum systems(unless integral elsewhere)		59.50	
22010701	heating	0.00		
22010702	confinement	60.11		
22010703	control system	0.00		
22010704	central energy storage	27.06		
22010705	other	6.22		
22010700	power supply, switching & energy storage		93.39	
22010800	impurity control		0.00	
22010901	vacuum tank	0.00		
22010902	direct convertor modules	0.00		
22010903	thermal panels	0.00		
22010904	power conditioning equipment	0.00		
22010900	direct energy conversion system		0.00	
22010000	reactor equipment			629.71
22020101	pumps & motor drives(modular & nonmodular)	0.00		
22020102	piping	0.00		
22020103	heat exchangers	0.00		
22020104	tanks(incl. dump,make-up,clean-up,trit.,hot storage)	0.00		
22020105	clean-up system	0.00		
22020106	thermal insulation, piping & equipment	0.00		
22020107	tritium extraction	0.00		
22020100	primary coolant system		0.00	
22020201	pumps & motor drives(modular & nonmodular)	0.00		
22020202	piping	0.00		

22020203	heat exchangers	0.00		
22020204	tanks(incl. dump,make-up,clean-up,trit.,hot storage)	0.00		
22020205	clean-up system	0.00		
22020206	thermal insulation, piping & equipment	0.00		
22020207	tritium extraction	0.00		
22020200	intermediate coolant system		0.00	
22020000	main heat transfer & transport systems			0.00
22030101	refrigeration	0.00		
22030102	piping	0.00		
22030103	fluid circulation driving system	0.00		
22030104	tanks	0.00		
22030105	purification	0.00		
22030100	magnet cooling system		0.00	
22030201	refrigeration	0.00		
22030202	piping	0.00		
22030203	fluid circulation driving system	0.00		
22030204	tanks	0.00		
22030205	purification	0.00		
22030200	shield & structure cooling system		0.00	
22030301	refrigeration	0.00		
22030302	piping	0.00		
22030303	fluid circulation driving system	0.00		
22030304	tanks	0.00		
22030305	purification	0.00		
22030300	supplemental heating system cooling system		0.00	
22030401	refrigeration	0.00		
22030402	piping	0.00		
22030403	fluid circulation driving system	0.00		
22030404	tanks	0.00		
22030405	purification	0.00		
22030400	power supply cooling system		0.00	
22030500	other cooling systems		0.00	
22030000	auxiliary cooling systems			41.24
22040100	liquid waste processing & equipment		0.00	
22040200	gaseous wastes & off-gas processing system		0.00	
22040300	solid waste processing equipment		0.00	
22040000	radioactive waste treatment & disposal			0.00
22050100	tritium processing systems		13.52	
22050200	tritium processing cleanup systems		6.90	
22050300	tritium monitors and controls		9.42	
22050400	tritium pellet injection		2.81	
22050500	air detritiation systems		37.82	
22050000	tritium processing and storage systems			70.47
22060101	blanket & coil maintenance equipment	0.00		
22060102	components rotated into service to allow maint.	0.00		
22060103	other maintenance equipment	0.00		
22060100	maintenance equipment		41.94	
22060200	special heating systems(start-up,trace, etc.)		0.00	
22060300	coolant receiving, storage & make-up systems		0.00	
22060400	gas systems		0.00	
22060500	building vacuum systems		0.00	
22060000	other reactor plant equipment			41.94
22070100	reactor i&c equipment(burn control, diagnostics, etc.)		0.00	
22070200	radiation monitoring systems		0.00	
22070300	isolated indicating & recording gauges, etc.		0.00	
22070000	instrumentation & control(i&c)			65.52
22980000	spare parts allowance			0.00

22990000	contingency allowance	0.00	
22000000	reactor plant equipment		848.88

c a p i t a l c o s t a c c o u n t s

09/11/84 [05:15:02]

account #	title	cost (million dollars)
23000000	turbine plant equipment	0.00

c a p i t a l c o s t a c c o u n t s

09/11/84 [05:15:03]

account #	title	cost (million dollars)
24000000	electric plant equipment	15.56

c a p i t a l c o s t a c c o u n t s

09/11/84 [05:15:04]

account #	title	cost (million dollars)
90000000	total reactor direct capital cost	1022.19

```
********************************** fedindt  **********************************

*  This data set is for the entire TSC.  The basic case is the
*  fed baseline configuration .
*
*
*****************************************************************
*****  program flow control input
*  outfil = name of the combined output file
*  inblk = name of the input block data file for restart capability
*          (optional)
*  outblk = name of the output block data file which can be use for later
*           restart or for input to auxillary programs (e.g. fiff4)
*           (optional)
*  pltnam = partial name of the plot file for the plan and elevation view
*           of the configuration (optonal)
*  runmod = name of the module to be run.
*           runmod='all' run the whole program
*  ioin = input control option. (only ioin=1 is recognized)
*  iout = output control option.  iout=0 turns off most output.
*                                 iout=1 turns on normal output.
*         (some modules have additional output controls and options)
*  iplot = plot control option.  iplot=0 means no plot of configuration
*                                iplot=1 means to plot configuration
&contrl
ioin=1 iout=1
runmod='all'
  outfil='fedout',  inblk=' ',  outblk='fedblk'
  iplot=1,  pltnam='fed1'
&endcontrl
&inall
*****************************************************************
***** physics input data
*  a            plasma minor radius                          m
*  ansinj       neutral beam injection angle                 degree
*  ar           aspect ratio                                 --
*  beta         beta                                         --
*  bmax         field strengh at the tf coil                 t
*               (if 0, value is calculated)
*  bt           field strengh on axis                        t
```

```
*                (value is calculated if bmax unequal 0.)
*  ebps          beta poloidal/aspect ratio                          --
*  gamma         resistance volt-sec multiplier for rf startup       --
*  iopt          iteration option on burn time                       --
*                (iopt=0, no iteration, input burn time is used.
*                 iopt=1, iteration on aspect ratio to obtain
*                 input value of burn time.  iopt=2, maximun
*                 calculated burn time is used for input value
*                 of aspect ratio)
*  jopt          iteration option on ebps                            --
*                (jopt=1, input value of ebps is used.  jopt=0,
*                 input value of ebps is a first guess)
*  li            plasma internal inductivity                         --
*  nnb           number of neutral beams                             --
*  mign          option for marginal ignition
*                 (if mign=1, plasma minor radius is varied until
*                 marginal ignition is achieved)
*  plshap        plasma triangularity                                --
*  q             safety factor                                       --
*  rf            rf assisted startup (1=yes, 0=no)                   --
*  ripple        ripple at plasma edge                               %
*  scrapl        scrapeoff layer                                     m
*  kappa         plasma elongation                                   --
*  tbeam         startup heating duration                            sec
*  tburn         burn time                                           sec
*  te            plasma electron temperature                         kev
*  ti            plasma ion temperature                              kev
*  tohs          oh solenoid swing time                              sec
*  tqnch         plasma quench time                                  sec
*  tramp         oh ramp time                                        sec
*  z             impurity species                                    --
*  zeff          effective charge                                    --
*&phyin
plshap=.3 rf=1, nnb=0, anginj=35,
ar=3.85 a=1.3 kappa=1.6 bt=4.641 beta=.052 ti=10. te=10.
q=3.2 zeff=1.5 z=8. gamma=.505 li=1.5 scrapl=.2
ripple=0.83 tramp=30. tohs=6. tbeam=6.
tburn=100. tqnch=10. iopt=0 bmax=0. jopt=1 ebps=.515 mign=0
*&endphyin
*****************************************************************
***** first wall and shield input data
*  avail         machine availability (annual)
*  denstl        density of steel                                  kg/m**3
*  dentun        density of tungsten                               kg/m**3
*  denb4c        density of boron carbide                          kg/m**3
*  itorus        1 d shape shield,  2 square shield with limiter   -
*  igloo         1 allow coil to come thru shield, 0 don't allow   -
*  dfwi          inboard first wall thickness                      m
*  dwfo          outboard first wall thickness                     m
*  di2           inboard gap between first wall                    m
*  dldo          outboard lead shield thickness                    m
*  do2           outboard gap between first wall and shield        m
*  dshi          inboard shield thickness                          m
*  dsho          outboard shield thickness                         m
*  dshom         min. outboard shield thickness between plasma     m
*                and magnet. (used with igloo=1 option only)
*  ibdpc         fraction of total flux incident on the
```

```
*                   inboard wall
*  ioptsh        option to select inboard shield material
*                   0= steel
*                   1= tungsten
*  life          tokamak life                                    years
*  mhtf          maximum heat rate at the tf coil case           mw/m**3
*  mxdose        max. dose rate to TF insulation                 rads
*  obdpc         fraction of total flux incident on the
*                   outboard wall
*  split         fraction of alpha power to divertor
*  ucstl         unit cost steel                                  $/kg
*  uctun         unit cost tungsston                              $/kg
*  ucb4c         unit cost boron carbide                          $/kg
*  spoolt        thickness of spool (should be zero)              m
*  ddweq         equivelent solid dewar thickness                 m
*  voifrc        void fraction of the shield
*&fwsin
dfwi=.05 di2=0. dshi=.601 dfwo=.15 do2=0. dsho=1.274
dldo=.05
life=10. avail=.169
split=0.8
mhtf=0.002 spoolt=0. ddweq=0.025
  mxdose=1.e9
ibdpc=.25 obdpc=.5 ebdpc=.25 voifrc=.25
ioptsh=0 itorus=2 isloo=0
denb4c=2300. denstl=7800. dentun=18300. ucb4c=48. ucstl=26. uctun=50.
*&endfwsin
*****************************************************************
***** toroidal field coil (and copper insert) input data
*  acastr        allowable hoop stress                     psi
*  acstn         allowable strain
*  dasi          tf inside gap between shield and dewar    m
*  daso          tf outside gap between shield and         m
*                   dewar
*  dcase         case density                              kg/m**3
*  dcond         conductor density                         kg/m**3
*  dcs           fraction of gap between circle and
*                   trapezoid not filled with conductor
*                   or winding
*  ddw           dewar thickness (including dewar,         m
*                   nitrogen shield and vacuum space)
*  ebuck         bucking cylinder module of elasticity     psi
*  ecase         tf case module of elasticity              psi
*  econd         conductor module of elasticity            psi
*  fcfbuc        fraction of centering force assumed to
*                   be supported by bucking cylinder
*  fwedge        tf coil cross section
*                   if 1, trapezoidal
*                   if 0, rectangular
*                   if >0, <1, in between
*  hmax          maximum height of tf coils                m
*                   (used with shaptf=2 only)
*  jcontf         conductor current density                 a/cm**2
*  itfka         tf coil operating current                        ka
*  nubuck        poisson's ratio for bucking cylinder
*  oacdtf        overall current density (used with        a/cm**2
*                   shaptf=2 only)
```

```
*  rhmax        the radius to the maximum tf coil        m
*                  height (used with shaptf=2 only)
*  rmax         tf coil maximum radius (used with        m
*                  shaptf=2 only)
*  shapdw       dewar shape option (1=ornl dewar
*                  system)
*  shaptf       tf coil shape option (1='d' shaped,
*                  2=specified)
*  tfno         number of tf coils
*  tftmp        tf coil operating temperature            deg-k
*  thkcas       assumed tf case thickness                m
*  toltor       the tolerance between a torus            m
*                  sector and the tf window for
*                  straight line sector removal
*  ucbc         unit cost of bucking cylinder            dollars/kg
*  uccase       unit cost of tf case                     dollars/kg
*  uccond       unit cost of tf conductor                dollars/kg
*  tvf          conductor void fraction
*  xtp          tf coil inboard leg radius               m
*                  (used with shaptf = 2, only)
*  ysbuck       bucking cylinder yield strength          psi
*  ytp          height of inner tf leg straight          m
*                  section (used with shaptf=2 only)
*&tfin
nametf='tf coil ','data    '
tfno=10.  shaptf=3.  shapdw=1.  jcontf=2200.  vftf=.15  dcs=1.  toltor=.15
thkcas=.08  dagi=.18  dago=.01  ddw=.2  fwedge=1.  itfka=25.
econd=17.e6  ecase=28.e6  acstn=8.65e-4  acastr=31.e3
dcase=8027.  dcond=8941.  uccase=26.  uccond=105.  ucbc=26.
ebuck=33.e6  nubuck=.03  ysbuck=60.e3  fcfbuc=1.154
rhmax=5.288  oacdtf=1398.0  rmax=10.498  hmax=5.471
tftmp=3.2  ytp=3.50 xtp=2.039
*&endtfin
*&ciin
***** no copper insert data for this case
*&endciin
*****************************************************************
***** poloidal coil input data
*  aref         reference plasma minor radius            m
*  b(n)         magnetic field in oh solenoid            t
*  bohr         reference magnetic field in oh           t
*                  solenoid
*  bplasr       reference plasma half height             m
*  cptd(n)      current per turn in each pf coil         amps
*  gapboh       space between bucking cylinder and       m
*                  oh winding
*  hshldr       reference shield height measured         m
*                  from plasma c/l
*  icref(n)     reference pf coil currents               mega-amps
*  index(n)     coil grouping index
*                 =1 if coil is the last coil
*                    or only coil of a group
*                 =0 otherwise
*  iphbr        reference high beta plasma current       mega-amps
*  jconpf(n)        current density of each pf coil          amps/cm**2
*  locate(n)    pf coil location (a two-digit number)
*                  first digit:
```

```
*                    1  ef coil interior to tf coil
*                    2  ef coil exterior to tf coil
*                    3  oh component coil
*                    4  oh solenoid
*                    second disit:
*                    1  located off torus outer surface
*                    2  not used
*                    3  located off tf coil outer surface
*                    4  located off bucking cylinder inner radius
*                    (used in induct module)
*  n1            number of interior ef coils
*  n2            number of exterior ef coils
*  n3            number of oh component coils
*  n4            number of oh solenoids
*  nos           order of the gaussian integration
*                   (used in induct module)
*  mut           print option for inductance values
*  ohhghf        oh solenoid fraction of tf coil height
*  anch          fraction of oh current at plasma quench
*  rhopf(n)        resistivity of each pf coil              ohm-m
*  routr         reference tf coil outer leg dimension   m
*  roref         reference major radius                  m
*  rref(n)       reference radius of each pf coil        m
*  tfhtr         reference tf coil height from           m
*                   plasma c/l
*  ucc           unit cost of copper coil winding        dollars/kg
*  ucs           unit cost of ????
*  ucsc          unit cost of superconducting winding    dollars/kg
*  vf(n)         void fraction of each pf coil
*  zref(n)       reference height of each ef coil        m
*                   from plasma c/l
*&pfin
n1=2  n2=3  n3=0  n4=2
ohhshf=1.  anch=.33  sarboh=.125  ucsc=200.  ucc=30.  aref=1.3
iphbr=6.5  roref=5.  routr=10.19  bohr=7.  hshldr=3.63
bplasr=2.08  tfhtr=5.29 ucs=26.
cptd=1.2e5,1.2e5,5(5.e4),13(0.)
jconpf=1500.,1500.,1400.,1400.,1500.,1500.,1500.,13(0.)
vf=0.,0.,5(.6),13(0.)
b=4(0.),3(7.),13(0.)
locate='1&1','1&1','2&3','2&3','2&4','4&4','4&4',13('0&0')
rhopf=2.e-8,2.e-8,5(0.),13(0.)
icref=4.28, 3.74, -6.06, -9.08, -12., 0., 0., 13(0.)
rref=3.85, 3.05, 9.5, 9.5, 1.17, 0., 0., 13(0.)
zref=4.1, -3.8, 4.75, -5.7, 3(0.), 13(0.)
nos=2 mut=0
index=5(1),0,1,13(0)
*****************************************************************
*  waves          two-dimensional array containing current
*                 wave forms for each ef coil circuit from
*                 time equal to zero through the
*                 end of the burn cycle.  the wave form
*                 for the oh circuit is not input, but
*                 calculated internally.  first index
*                 labels circuit number, second labels
*                 time zones.
(waves(i,k),k=1,5) = 0.  0.421  1.014  0.892  1.,
```

```
(waves(2,k),k=1,5) = 0.  0.401  1.019  0.906  1.
(waves(3,k),k=1,5) =  0.  -0.0825  0.655  0.949  1.
(waves(4,k),k=1,5) = 0.  -0.099  0.632  0.967  1.
(waves(5,k),k=1,5) = 0.  -1.  1.  1.  1.
*&endpfin
*******************************************************************
*&vsin
***** no volt-sec input is required by the program
*&endvsin
*******************************************************************
***** neutral beam input data
*  beamlh       beam height                              cm
*  beamll       beam length                              cm
*  beamlw       beam width                               cm
*  ductl        duct length (if zero, length will        cm
*                  be computed)
*  ductx        duct width                               cm
*  ducty        duct height                              cm
*  powfac       multiplier to adjust beam power from
*                  the value calculated in the physics
*                  module
*&nbin
beamll=790.  beamlw=600.  beamlh=800.
ductl=0.  ductx=100.  ducty=120.  powfac=0.912
*******************************************************************
***** additional neutral beam input data for experts
*  cellbh       horizontal stray field in neutralizer    gauss
*  cellbv       vertical stray field in neutralizer      gauss
*  celll        neutralizer length                       cm
*  dumpl        direct recovery/ion dump region          cm
*                  length
*  etadr        direct recovery current efficiency
*  etarei       reionization efficiency
*  hdivrg       1/e divergence in the horizontal         degrees
*                  direction
*  nh           number of sources horizontally in
*                  the source array
*  nv           number of sources vertically in the
*                  source array
*  pratio       ratio of the pumping speed in the
*                  neutralizer/dump chamber to the
*                  baffle conductance from that
*                  chamber
*  seph         horizontal separation between            cm
*                  sources
*  sepv         vertical separation between sources      cm
*  sratio       ratio of source vertical width to
*                  horizontal width
*  vdivrg       1/e divergence in the vertical  degrees
*                  direction
nh=2  nv=3  seph=100.  sepv=100.  sratio=2.  hdivrg=1.5  vdivrg=1.5
celll=200.  dumpl=100.  pratio=3.  cellbh=8.  cellbv=8.
etadr=0.6  etarei=0.99
*&endnbin
*******************************************************************
***** radio frequency heating input data
*  pplasm  = preheating power to the plasma in megawatts
```

```
*  funct   = heating function;1 for start up or 2 for bulk heating
*  freq    = frequency regime;1 for ecrh 2 for lhrh or 3 for icrh
*  tbeam   = pulse length in seconds
*  fuel1   = the amu of the first fuel in the fuel mix; 1 for
*            hydrogen, 2 for deutrium, and 3 for tritium. fuel2 is the amu
*            of the second fuel in the mixture.
*  fmix    = the fraction of the fuel mixture assigned to fuel#1
*  windb   = window loss in db
*  ppflux  = percent of prime power fluxuation
*  percenrg= percent of regulation required for the power tube
*  dcloss  = directional coupler loss in db
*  winloss = window loss in db
*  circlos = circulator loss in db
*  effk    = efficiency of the klystron
*  pplasma = power into the vacuum in kw
*  f       = the free space frequency in ghz
*  xmaxwid = the maximum port width in cm
*  xmaxhith= the maximum port height in cm
*  pwrdeni = the maximum power density of an element (waveguide)
*            in kw/cm2
*  es      = the element spacing in cm
*  wgthick = the waveguide wall thickness in cm
*  epsa    = the number of elements per subarray
*  sbsav   = the spacing between subarrays in the vertical direction
*            in cm
*  sbsah   = the spacing between subarrays in the horizontal direction
*            in cm
*  xlan1   = the depth of the launcher (shield?) in cm
*  pltx1   = the distance in meters from the launcher to the power
*            divider.
*  pltx2   = the distance in meters from the input to the power divider
*            to the output of the rf power module.
*  pltx3   = the distance in meters from the input of the power module
*            to the drive.
*  pltx4   = the distance in meters from the driver input back to the
*            exciter.
*  pltxpml = the distance in meters from the launcher to the
*            performance monitor cabinet.
*  pltxpma = the distance in meters from the power amplifier module
*            to the performance monitor cabinet.
*  pltxpmd = the distance in meters from the driver cabinet to the
*            performance monitor cabinet.
*&rfhin
pplasm=1.  funct=1  freq=1  fuel1=2.  fuel2=3.  fmix=.5
  peric=1.0  plhcd=0.
     f=2.73  xmaxwid=100.  xmaxhith=50.  pwrdeni=10.
     es=1.3  wgthick=0.1  epsa=8.  sbsav=4.  sbsah=2.  xlan1=100.
     xlan1=100.  pltx2=35.  pltx3=3.  pltx4=27.  pltxpml=15.
     pltxpma=4.  pltxpmd=4.  np=2
     effk=0.7  windb=0.2  ppflux=0.02  percenrg=5.  dclos=0.02
  winlos=0.02  circlos=0.02
*&endrfhin
*****************************************************************
***** neutral beam geometry input data
*  afac          a factor used to locate the point where
*                  the neutral beam angle is measured.
*                  its values range from 0., 1. to 2.
```

```
*                  corresponding to a loction at the
*                  torus outboard, the plasma center,
*                  and the torus inboard, respectively.
*  dsap         the gap between the neutral beam        cm
*                  injector and the tf coil to allow
*                  removal of the injector.
*&nbsin
dsap=0.  afac=0.
*&endnbsin
*****************************************************************
***** electric power for pf coils input data
*                  for each pf circuit j
*  cva(j)       unit cost of startup power converters   mega-dollars/mva
*  c2p(j)       unit cost of protection equipment       mega-dollars/mj
*  cbi(j)       cost of bussing                         mega-dollars/m-ka
*  cbz(j)       unit cost of burn power supplies        mega-dollars/mva
*  c1p(j)       cost of instrumentation                 mega-dollars
*  cai(j)       factor to multiply total cost by
*  busl(j)      bus length                              m
*&elein
cva=12(.02),8(0.),
c2p=                12(.001),       8(0.),
cbi=                12(3.584e-5),   8(0.),
cbz=                12(.10),        8(0.),
c1p=                12(.05),        8(0.),
cai=                12(1.3),        8(0.),
busl=                12(240.),       8(0.),
*&endelein
*****************************************************************
***** reactor buildins input data
*  atten        e-foldins distance of the cell wall             m
*  dose         neutron flux to the environment                 w/m**2
*&rbin
dose=1.9e6  atten=.145
row=5. trcl=1. ext=0. hatch=5.8  stcl=0.
crht1=3. crht2=3.6 fndtk=2. bcylht=10.2
*&endrbin
*****************************************************************
***** tritium systems input data
*  bblm          tritium breeding blanket mass         kg
*  br            breeding ratio for breeding blanket          -
*  ctrit         cost of tritium                              $/Ci
*  cueff        eds removal efficiency
*  cutrb = desired cleanup time for reactor buildins atmosphere (hr)
*  cuthc = desired cleanup time for hot cell facility atmosphere (hr)
*  cuttb = desired cleanup time for tritium processins buildins atmosphere (hr)
*  cutwb = desired cleanup time for radwaste buildins atmosphere (hr)
*  decf = decontamination factor for atmospheric cleanup systems
*  stkcon = tritium concentration in stack effluent (uCi/m**3)
*  tfrac        fraction of tritium in plasma d-t mixture
*  tbcon         tritium concentration in the breeding blanket  g/cm**3
*  ventrb = inleak rate of reactor buildins (vol. frac./day)
*  venthc = inleak rate of hot cell facility (vol. frac./day)
*  venttb = inleak rate of tritium processins buildins (vol. frac./day)
*  ventrw = inleak rate of radwaste buildins (vol. frac./day)
*&trtin
tfrac=.5  ctrit=1.00
```

```
  ventrb=0.01  venthc=0.01  venttb=1.0  ventrw=.0
  cutrb=72.  cuthc=72.  cuttb=24. cutrw=72.
    cueff=.99  decf=1.e-6  stkcon=50.
*  tritium breeding blanket input
bblm=0.  br=.5
*&endtrtin
*************************************************************
***** vacuum system input data
*  dpp = pressure needed at the first wall region (Pa)
*  dnum = initial guess of the number of ducts required
*  diam = duct diameter (m)
*  dlen = duct length (m)
*  bnum = number of bends in each duct
*  ipump = type of pump, use 'turbo' or 'cryo'
*  regen = regeneration time (h)
*  pcap = pump capacity (2000 to 20,000 Pa m**3 is possible input).
*  psp = rated speed per pump (input is 5, 25, 100 m**3/s depending on
*        type ofpump).
*        (Available turbomolecular are 5 m**3/s, compund cryopumps are
*        25-100 m**3/s).
*  gsout = outgassing rate (Pa m**3/s = 5.3e-4).
*  pburn = preburn gas pressure (Pa).
*  reflt = fraction of escaping plasma recycled
*  tg = post burn gas temperature (deg-k)
*&vacin
dpp=0.1  dnum=10. diam=1.2  vfduct=0.4  ucduct=26.  bnum=2.
tg=573.  regen=1.  psp=20.  gsout=0.  reflt=0.8
lim=1  pcap=5000.  duclim=10. pburn=1.33e-3 ipump='turbo'
*&endvacin
*************************************************************
***** pellet fueler input data
*  dispr        pellet dispersion                          degrees
*  dpmm         tritium-deuterium pellet diameter          mm
*  effhe        liquid helium cooling effectiveness
*  effn2        liquid nitrogen cooling effectiveness
*  efft         vacuum system transmission efficiency
*  effv         vacuum system efficiency
*  fpen         pellet penetration (fraction of plasma minor
*                  radius)
*  mwt          molecular wt of fuel
*  npf        number of fuel pellet injectors
*  nonoz        number of nozzles
*&fuein
fpen=.225  mwt=5.  npf=3.  nonoz=10.  dispr=1.
effhe=.5  effn2=.5  effv=.5  efft=.8  dpmm=4.
*&endfuein
*************************************************************
***** tf electrical power conversion input data
*  alcpkg       cost of assembled aluminum bar             dollars/kg
*  buslim       mean bus length of one bus run             m
*  cifrac       c and i fractional cost of tf power supply
*  cpcai        c and i cost per coil section (circuit breaker) m-dollars
*  cpkv         cost of varistors and associated switches
*                  per kv                                  m-dollars
*  cpkw1        cost of load center per kw                 dollars
*  cpkw2        cost of tf power supplies per kw           dollars
*  cpmva        cost of circuit breakers per mva           m-dollars
```

```
*  cpmw          cost of dump resistors per mw                    m-dollars
*  djmka         design circuit density of the bus                ka/cm**2
*  fspc1         floor space coefficient for power supplies
*  fspc2         floor space coefficient for circuit breakers
*  fspc3         floor space coefficient for dump resistors
*  nsptfc        number of sectors per tf coil
*  rtfps         tf coil power supply rating factor
*  tchshr        tf coil charge time                              hrs
*  vtfskv        max voltage across coil section during
*                   quench                                        kv
*&tfpin
djmka=.1  buslim=200.  rtfps=1.05  vtfskv=2.
alcpks=18.0  cpkw1=90.  cpkw2=400.  cpmva=.004  cpmj=40.0e-6  cpkv=.0075
cpchan=1000.  fspc1=0.13  fspc2=0.80  fspc3=0.40
tchrhr=.00556  tchshr=4.4  tfprt=1.0  kcoup=0.65
*&endtfpin
*****************************************************************
***** facilities input data
*      building information is stored in 13 word arrays where:
*            word        data
*             1      =   length  (m)
*             2      =   width  (m)
*             3      =   height  (m)
*             4      =   volume  (m**3)
*             5      =   floor area  (m**2)
*             6      =   unit cost  ($/m**3)
*             7      =   option identification
*                          * - program uses supplemental information
*                              to calculate volumes
*                         (* - implies cyclindrical reactor building
*                          # - implies rectangular reactor building)
*             8-13   =   alphameric identifier
*      word 2   less than or = 0  implies cyclindrical
*                                 then word 1 = radius
*      word 1   less than or = 0   implies volume given, if word 4 is
*                                  also 0, building not used or is
*                                  calculated using supplemental
*                                  information.
*
*      word 7-12, the alphameric identifier, must be at least 6 and less
*      than 30 characters long.
*&facin
reb=63.0,  52.0,  44.30,  145126.80,  3276.0,  400.0,  '#'
hcf=78.0,  52.0,  32.0,  129792.0,  4056.0,  400.0,  '*'
instr=15.0,  15.0,  6.0,  1350.0,  225.0,  80.0,  '_'
watr=25.0,  25.0,  10.0,  6250.0,  625.0,  80.0,  '_'
recir=45.0,  15.0,  10.0,  6750.0,  675.0,  80.0,  '_'
cutfe=88.0,  24.0,  10.0,  21120.0,  2112.0,  80.0,  '*'
ohpfe=88.0,  43.0,  10.0,  37840.0,  3784.0,  80.0,  '*'
bulkh=26.0,  16.0,  10.0,  4160.0,  416.0,  80.0,  '_'
msf=80.0,  20.0,  20.0,  32000.0,  1600.0,  80.0,  '*'
cref=40.0,  30.0,  10.0,  12000.0,  1200.0,  80.0,  '_'
tritbl=58.0,  30.0,  30.0,  52200.0,  1740.0,  270.0,  '_'
vent=58.0,  25.0,  30.0,  43500.0,  1450.0,  270.0,  '_'
radwa=40.0,  40.0,  10.0,  16000.0,  1600.0,  270.0,  '_'
cont=30.0,  15.0,  10.0,  4500.0,  450.0,  0.0,  '*'
dsen=32.0,  16.0,  10.0,  5120.0,  512.0,  80.0,  '_'
```

```
admin=90.0,  60.0,  10.0,  54000.0,  5400.0,  80.0,  '_'
shop=70.0,  70.0,  40.0,  196000.0,  4900.0,  80.0,  '*'
tunla=0.0,  0.0,  0.0,  0.0,  0.0,  0.0,  '_'
stack=0.0,  0.0,  90.0,  0.0,  0.0,  2.0,  '_'
simpr=12.30
%&endfacin
*****************************************************************
***** maintenane equipment input data
*  The variables for the different types of equipment have the form
*  nhxxxx, nrxxxx, and ucxxxx where xxxx is the 4 digit equipment
*  descripter as follows.
*  nh prefix = number required in hot cell facility
*  nr prefix = number required in reactor buildings
*  uc prefix = unit cost (K$)
*  ih prefix = option control for calulation of nhxxxx
*  ir prefix = option control for calulation of nrxxxx
*  cctv =  closed circuit tv
*  clit =  cell lightins and audio sys.
*  tloc =  transfer lock
*  dewa =  decontamination and waste handlins
*  pct2 =  welder-cutter; pipes < 2 in.
*  pct6 =  welder-cutter; pipes 2 - 6 in.
*  pctl =  welder-cutter; pipes > 6 in.
*  eeff =  end effectors
*  smhd =  sector module handlins device
*  scut =  welder-cutter; structures and vacuum joints
*  tran =  transporter
*  subh =  subcomponent handlins device
*  limh =  limiter blade handlins device
*  movm =  movable manipulator sys.
*  invm =  in-vessel manipulator sys.
*  lift =  liftins fixtures, slinss, etc.
*  hant =  hand tools
*  ldsy =  leak detection sys.
*  pers =  periscope, liner, and shield
*  swin =  shielded window
*  crcc =  cranes 100 - 500 to20es
*  cr50 =  cranes 50 tonnes
*  cr10 =  cranes 10 tonnes
*  cr05 =  cranes 5 tonnes
*  cr01 =  cranes 1 tonne
*  powa =  power arm manipulator (bridse mounted)
*  mecm =  mechanical msm (thru-the-wall)
*  mech =  mechanical msm (bridse mounted)
*  roba =  robot arm (floor mounted)
*  spls =  shield pluss
*****************************************************************
%&meaini
  uccctv=24.2  nrcctv=6  nhcctv=10
  ucclit=435.6  nrclit=1  nhclit=1
  uctloc=1452.0  nrtloc=1  nhtloc=0
  ucdewa=3630.0  nrdewa=0  nhdewa=1
  ucpct2=60.5  nrpct2=2  nhpct2=2
  ucpct6=90.8  nrpct6=2  nhpct6=2
  ucpctl=151.3  nrpctl=2  nhpctl=2
  uceeff=605.0  nreeff=1  nheeff=1
  ucsmhd=526.9  nrsmhd=1  nhsmhd=0 irsmhd='*' ihsmhd='*'
```

```
  ucscut=605.  nrscut=1  nhscut=0
  uctran=242.0  nrtran=1  nhtran=0
  ucsubh=421.3  nrsubh=1  nhsubh=0
  uclimh=543.4  nrlimh=1  nhlimh=0
  ucmovm=1210.0  nrmovm=1  nhmovm=0
  ucinvm=1210.0  nrinvm=1  nhinvm=0
  uclift=302.5  nrlift=3  nhlift=1
  uchant=605.0  nrhant=1  nhhant=0
  ucldsy=1210.  nrldsy=1  nhldsy=0
  ucpers=170.6  nrpers=6  ihpers='*'
*&endmegin1
*&megin2
  ucswin=292.8  irswin='*'  ihswin='*'
  uccrcc=1210.  nrcrcc=1  nhcrcc=1
  uccr50=968.0  nrcr50=1  nhcr50=0
  uccr10=186.3  nrcr10=0  ihcr10='*'
  uccr05=121.0  nrcr05=0  nhcr05=0
  uccr01=54.5  nrcr01=0  nhcr01=0
  ucpowa=505.8  nrpowa=1  nhpowa=1
  ucmecm=121.0  nrmecm=2  ihmecm='*'
  ucmecb=937.8  nrmecb=1  nhmecb=1
  ucroba=121.0  nrroba=0  nhroba=1
  ucspls=605.0  nrspls=1  nhspls=0
*&endmegin
*****************************************************************
***** heat transfer system input data
*&htsin
basemw=5.
tph=100. tpc=60. tih=71. tic=43. tcti=54. tcto=32.
*&endhtsin
*****************************************************************
***** ac power systems input data
*&acpin
acprt=1.  hvlkv=500.  fvlkv=138.  pkwpm2=0.15  c2dsm=1.3
  c4nbpm=0.3  citsm=0.00  bcvmw=0.00  clthm=500.  cpmwm2=0.5
*&endacpin
*****************************************************************
***** instrumentation and control input data
*&iacin
  iddph=1, idtph=1, cexp=0.6, notm=6, idfalt=0
nohp= 1, 2, 2, 2, 1, 2, 2, 0, 1, 3, 25
nodp= 2, 1, 1, 1, 1, 2, 1, 2, 2, 2, 32
notp= 0, 0, 0, 1, 0, 0, 0, 2, 1, 1, 32
tmcpdm= 1.5, 1.3, 1.5, 0.7, 0.4, 0.3, 0.7, 0.8, 0.7, 0.4, 0.1
rfcpdm= 0.2, 0.2, 0.4, 0.3, 0.1, 0.1, 0.2, 0.2, 0.1, 0.1, 0.0
*&endiacin
*****************************************************************
&endinall
```

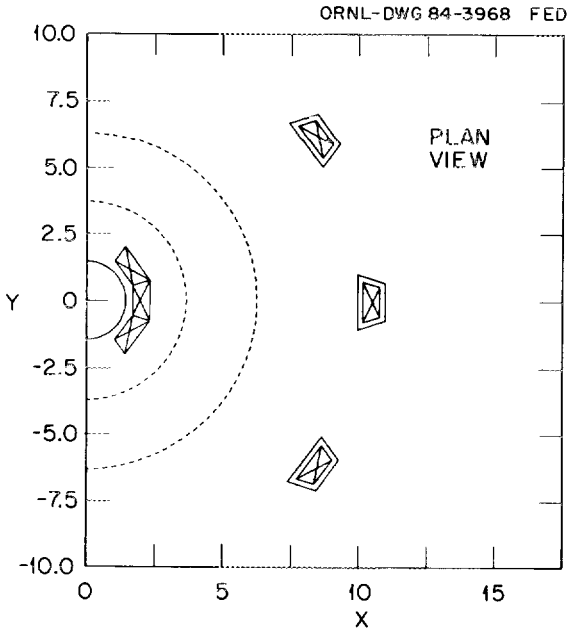
ORNL-DWG 84-3968 FED
PLAN
VIEW
10.0
7.5
5.0
2.5
Y 0
-2.5
-5.0
-7.5
-10.0
0
5
10
15
X

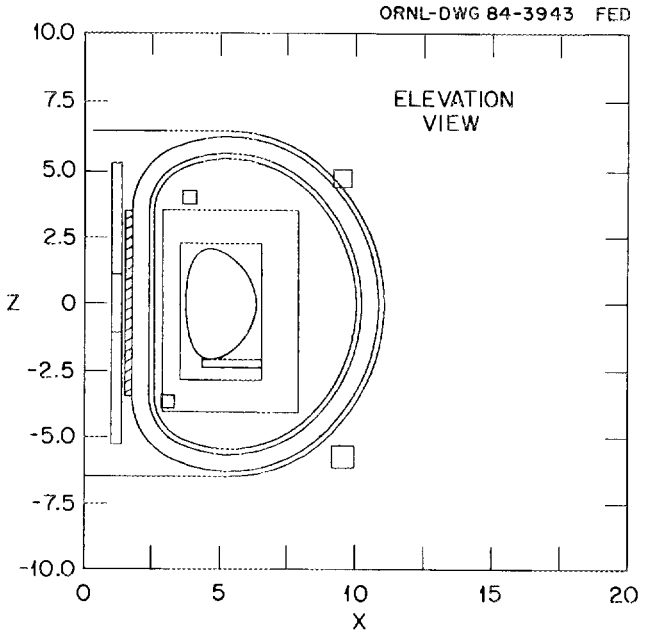
ORNL-DWG 84-3943 FED
ELEVATION
VIEW
10.0
7.5
5.0
2.5
Z 0
-2.5
-5.0
-7.5
-10.0
0
5
10
15
20
X

APPENDIX

1. PHYSICS MODULE

The physics module computes fusion power, power amplification factor (Q), plasma current, fueling rate, and the required volt-seconds to induce the plasma current. The physics module is a 0-D representation with plasma density and temperature profile effects modeled as a function of plasma average temperature. Peak heating power during startup is modeled as the summation of two parts. The first part is the maximum quasi-steady startup power encountered as the plasma temperature is raised to the operating value at constant plasma density. The second part accounts for the plasma heat capacity at the operating point divided by the heating time period. This latter term is an attempt to include the dynamic effect of heating the plasma to its operating temperature in a finite time. Two scaling relations for confinement time are available: Alcator ($\tau \propto n_e a^2$) and Mirnov[1] ($\tau \propto a I_p$), where n_e is the electron density, a is the plasma minor radius, and I_p is plasma current.

Flux conservation is assumed as the plasma is heated and makes the transition from low beta to high beta values. The relationship between plasma safety factor, beta, beta poloidal, and plasma current during the transition is shown in Fig. 2 and is taken from ref. 2.

ASSUMPTIONS AND CONSTRAINTS

- Code is for deuterium-tritium (D-T) fuel.
- $T_E = T_i$; code sets electron temperature equal to the ion temperature.
- One impurity is allowed.
- $\tau_p = \tau_E$; particle confinement time is set equal to energy confinement time. The effect of recycle is accounted for in the tritium processing module.
- Either field on axis, B_T, or max field at the TF coil can be input. A nonzero value of B_{max} activates an external iteration loop that varies B_T until the desired value of B_{max} is obtained.

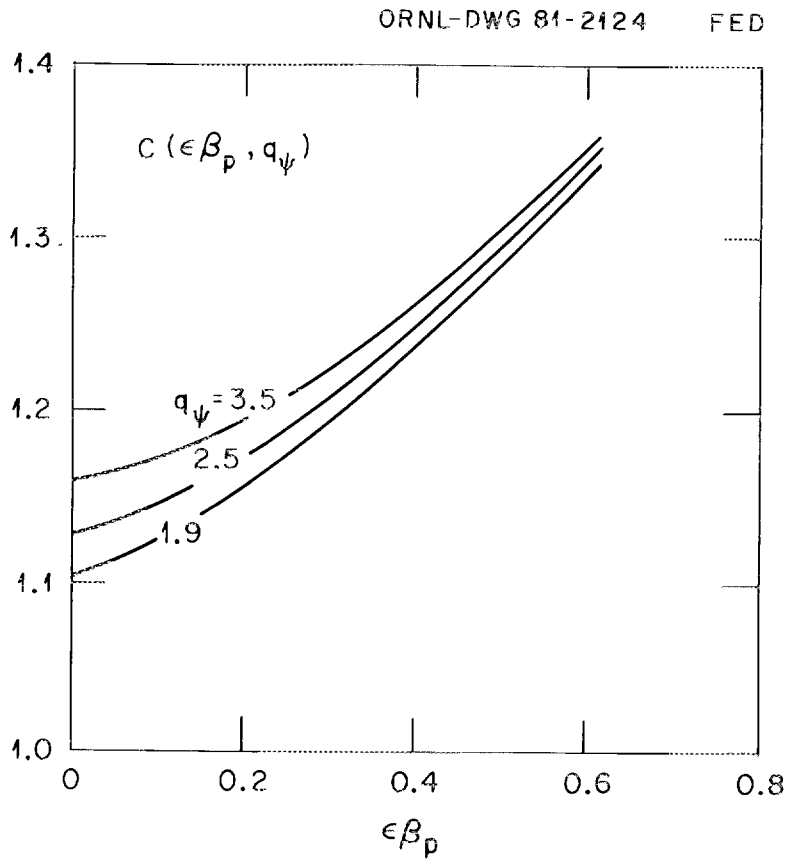

Fig. 2. The value of C as a function of $\varepsilon\beta_p$ and q_ψ for a FED-like flux-conserving tokamak where R = 4.80 m, a - 1.27 m, B_t = 3.62 T, κ = 1.6, and δ = 0.5.

- Marginal ignition may be specified by entering the input variable MIGN equal to 1. The plasma minor radius, a, is varied until the auxiliary power at the operating point goes to zero.
- The physics model presently used in the system code is zero-dimensional; however, temperature profile effects have been estimated based on normalization to results from a one- and one-half-dimensional (1 1/2-D) WHIST[3] transport code. The density profile across the plasma radius is assumed to be flat. The effects of the temperature profile on reactivity, $\langle\sigma v\rangle$, confinement time, and bremsstrahlung radiation were accounted for.

MODULE INPUT

Key input items to the physics module include: plasma minor radius, aspect ratio, beta or beta poloidal/aspect ratio, field on axis or the maximum field at the TF coil, safety factor, ripple at the plasma edge, scrape-off layer thickness, plasma elongation, plasma temperature, effective charge, and the impurity species. All of these items are input by the user (i.e., none are passed from other modules in the code). Table 5 shows the input parameters for the physics module.

Table 5. Physics module input parameters

Symbol	Description	Units	Source[a]
a	Plasma minor radius	m	U
anginj	Neutral beam injection angle	degree	U
ar	Aspect ratio	--	U
beta	Beta	--	U
bmax	Field strength at the TF coil (if 0, value is calculated)	t	U
bt	Field strength on axis (value is calculated if bmax≠0)	t	U
ebpg	Beta poloidal/aspect ratio	--	U
gamma	Resistance volt-seconds multiplier for rf startup	--	U
ignscl	Option for confinement scaling (ignscl = 0, INTOR scaling is used; ignscl = 1, MIRNOV scaling is used)	--	U
iopt	Iteration option on burn time (iopt=Ø, no iteration. Input burn time is used. iopt=1, iteration on aspect ratio to obtain input value of burn time. iopt=2, maximum calculated burn time is used for input value of aspect ratio)	--	U
jopt	Iteration option on ebpg (jopt=1, input value of ebpg is used. jopt=0, input value of ebpg is a first guess)	--	U
Kappa	Plasma elongation	--	U
li	Plasma internal inductivity	--	U
nnb	Number of neutral beams	--	U
mign	Option for marginal ignition (if mign=1, plasma minor radius is varied until marginal ignition is achieved)		
pburn	Plasma chamber pressure during burn	torr	U
pqnch	Plasma chamber pressure after quench	torr	U
plshap	Plasma triangularity	--	U
q	Safety factor	--	U
rf	rf-assisted startup (1=yes, Ø=no)	--	U

Table 5. (continued)

Symbol	Description	Units	Source[a]
ripple	Ripple at plasma edge	%	U
scrapl	Scrape-off layer	m	U
tbeam	Startup heating duration	s	U
tburn	Burn time	s	U
te	Plasma electron temperature	keV	U
ti	Plasma ion temperature	keV	U
tohs	OH solenoid swing time	s	U
tqnch	plasma quench time	s	U
tramp	OH ramp time	s	U
z	Impurity species	--	U
zeff	Effective charge	--	U

[a]Source: U = input is supplied by user; C = input flows in from other modules of the code.

GOVERNING EQUATIONS

Generate Plasma Contour and Geometry

$R_o = ar \times a$; major radius (m)

$b = Kappa \times a$; plasma half height (m)

$$\left.\begin{aligned} X &= a \times ar + a\cos(\theta + plshap \times \sin\theta) \\ Y &= a \times Kappa \times \sin\theta \end{aligned}\right\}$$

θ is varied from 0° to 360° in 9° increments. X and Y are coordinates of the plasma contour.

$\varepsilon = \frac{1}{ar}$; inverse aspect ratio

$SF = \sqrt{\frac{1 + Kappa^{2.0}}{2}}$; circumference ratio, elipse to circle

$VOL = 2\pi^2 a^3 (ar) Kappa$; plasma volume (m^3)

$AREA = 4\pi^2 a^2 (ar)(SF)$; plasma surface area (m^2)

Compute Plasma Current, Beta, Beta Poloidal

$$\left.\begin{aligned} \beta_p &= ebpg/\varepsilon \text{ ; beta poloidal} \\ C_{H\beta} &= f(ebpg)\sqrt{\frac{Kappa}{1.6}} \text{ ; see Fig. 2} \\ Beta &= \beta_p \left[\frac{C_{H\beta}}{q}\,\frac{\varepsilon}{(1-\varepsilon^2)^2}\right]^2 (SF)^2 \end{aligned}\right\}$$

If JOPT = 1, input the desired value of ebpg and calculate beta.

$$C_{H\beta} = f(ebpg)\sqrt{\frac{Kappa}{1.6}} \text{ ; from Fig. 2}$$

$$\beta_p = \frac{Beta}{\left[\frac{C_{H\beta}}{q}\frac{\varepsilon}{(1-\varepsilon^2)^2}\right]^2 (SF)^2} \text{ ; beta poloidal}$$

$$ebpg = \varepsilon \times \beta_p$$

If JOPT = 0, input desired value of beta and iterate on ebpg until initial input value of ebpg equals calculated ebpg.

If Mirnov [used in Tokamak Fusion Core Experiment (TFCX) design studies per Schmidt] scaling is specified, the limiting value of beta is calculated as a function of q, A, Kappa and is not a free input variable. The above section of code for JOPT = 0 is modified as follows:

$$C_{H\beta} = f(ebpg)\sqrt{\frac{Kappa}{1.6}} \times 0.92$$

$$Beta = \frac{0.233 \times (SF)^2}{q(ar)}$$

$$\beta_p = \frac{Beta}{\left[\frac{C_{Hb}}{q}\frac{\varepsilon}{(1-\varepsilon^2)^2}\right]^2 (SF)^2}$$

JOPT = 0 and Mirnov scaling is also specified.

Iterate until initial value of ebpg equals calculated value of ebpg.

$$ebpg = \varepsilon \times \beta_p$$

$$I_{p_{H\beta}} = 5 \times 10^6 \times a \times bt \times SF\sqrt{\frac{Beta}{\beta_p}} \text{ ; plasma current at high beta (A)}$$

$$C_{L\beta} = f(q)\sqrt{\frac{Kappa}{1.6}} \text{ ; C value at low beta (see Fig. 2)}$$

$$C_{L\beta} = f(q)\sqrt{\frac{Kappa}{1.6}} \times 0.92 \text{ ; if Schmidt scaling is used}$$

$$I_{PL\beta} = \frac{C_{L\beta}}{C_{H\beta}} \times I_{p_{H\beta}}$$; plasma current, low beta (A)

Calculate Profile Factors

$$T = t_e = t_i$$; plasma temperature (keV)

$$SHAPE_{\sigma v} = 1.4 - 0.03 \times (T - 11.6)$$; profile factor on σv

$$SHAPE_{RAD} = 1.3 + 0.0084 \times (T - 12.4)$$; profile factor on bremsstrahlung radiation

$$SHAPE_{\tau} = 2.1 - 0.042 \times (T - 12.4)$$; profile factor on confinement time

Calculate Particle Densities

$$\xi = \frac{Z_{eff} - 1.0}{Z^2 - Z}$$; impurity concentration

$$\beta = \text{Beta} \times 0.91$$; estimate of the value of beta with the fast alpha contribution removed

$$\mu_o = 4\pi \times 10^{-7}$$; permeability of free space

$$N_e = \frac{\beta(bt)^2}{(2\mu_o)[2 - \xi(Z - 1)](T)(1.602 \times 10^{-16})}$$; electron density (m^{-3})

$$N_I = N_e(1.0 - Z\xi)$$; fuel ion density (m^{-3})

$$N_z = N_e\xi$$; impurity ion density (m^{-3})

Determine Plasma Power Balance

$$\sigma v = f(T) \times SHAPE_{\sigma v} \text{ ; reactivity } (m^3/s)$$

$$P_\alpha = N_I^2 \times \frac{\sigma v}{4} \times 3.5 \times 1.602 \times 10^{-13} \text{ ; alpha power/m}^3 \text{ (W/m}^3\text{)}$$

$$P_{RAD} = 5.34 \times 10^{-37} \times Z_{eff} \times N_e^2 \times \sqrt{T} \times SHAPE_{RAD} \text{ ;}$$

bremsstrahlung power/m^3 (W/m^3)

$$POWER_\alpha = P_\alpha \times VOL/10^6 \text{ ; total alpha power (MW)}$$

$$POWER_{RAD} = RAD \times VOL/10^6 \text{ ; total bremsstrahlung power (MW)}$$

$$\tau = 5 \times 10^{-21} N_e a^2 (SHAPE_\tau) \text{ ; confinement time if using Alcator scaling (s)}$$

$$\tau = 0.15 \times a \times Ip_{H\beta} \times 10^{-6} \times \left(SHAPE_\tau \times 0.77\right) \text{ ; confinement time if using Mirnov scaling (s)}$$

$$P_{Loss} = \frac{\frac{3}{2} \times T\ (N_1 + N_e + N_z)(VOL)\ 1.6 \times 10^{-22}}{\tau} \text{ ; conduction and convection power loss (MW)}$$

$$\lambda = 24 - \ln\left[\sqrt{\frac{N_I}{10^6}} \Big/ (1000 \times T)\right] \text{ ; Coulomb logarithm}$$

ALPN = 2.0 ; anomalous enhancement (ALPN lies between 1 and 2. A value of 2 is used for design margin.)

$$\eta_{\parallel} = \frac{(1.638 \times 10^{-9})(ALPN) Z_{eff}}{(T)^{1.5}} \text{ ; plasma resistivity (ohm-m)}$$

$$R_p = \frac{2 \times R_o \times \lambda \times \eta_{\parallel}}{a^2 \times \text{Kappa}} \text{ ; plasma resistance (ohm)}$$

$$p_\Omega = I_{p_{L\beta}}^2 \times R_p/10^6 \text{ ; plasma ohmic heating (MW)}$$

$$P_{aux} = P_{loss} + \text{POWER}_{RAD} - \text{POWER}_\alpha - P_\Omega \text{ ; required heating power (MW)}$$

$$\text{POWER}_{FUS} = \text{POWER}_\alpha \times \frac{17.6}{3.5} \text{ ; total fusion power (MW)}$$

$$Q = \frac{\text{POWER}_{FUS}}{P_{aux}} \text{ ; plasma power amplification factor}$$

Determine Peak Plasma Heating Power

The code cycles through the equations starting at the section "Profile Factors" and continuing through "Particle Densities" and "Plasma Power Balance," varying the quasi-steady-state plasma temperature from zero to the operating temperature in small steps. Plasma density is maintained constant, consistent with the operating value of beta, throughout the temperature ramp (i.e., beta is varied linearly with temperature). The auxiliary heating power, P_{aux}, is computed at each value of plasma temperature in the "Power Balance" section, and the maximum value encountered is stored as the peak quasi-steady-state heating power. Figure 3 is an example plot of required power as a function of temperature.

$$P_{auxmx} = P_{aux} \text{ (at the value of T that maximizes } P_{auxmx}\text{) (MW)}$$

$$P_{\text{heat capacity}} = \frac{\frac{3}{2} \times T\ (N_I + N_E + N_Z)(\text{VOL})\ 1.6 \times 10^{-22}}{\text{TBEAM}} \text{ ; heating power required to raise plasma temperature from zero to the operating value in the heating time period TBEAM (MW)}$$

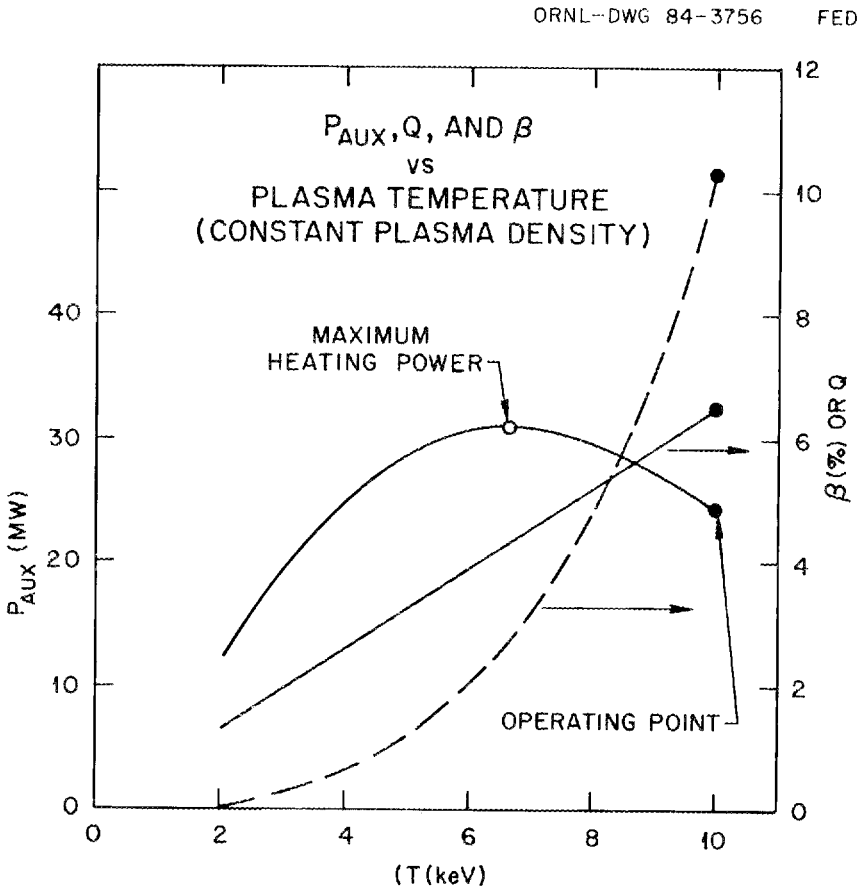

Fig. 3. Plasma current during transition from low beta to high beta values.

$$P_b = P_{auxmx} + P_{heat\ capacity}$$; peak plasma heating power (MW)

Calculate Global Energy Confinement Time

$$\tau_E = \frac{\frac{3}{2} \times T\ (N_I + N_E + N_Z)(VOL)\ 1.602 \times 10^{-22}}{POWER_\alpha + P_{aux} + P_\Omega}$$; global energy confinement time (s)

$$N_e \tau_E = N_e \times \tau_E$$; quality of confinement (s/m^3)

Calculate Neutron Wall Loading

$$LW = \frac{POWER_{FUS} \times 14.1/17.6}{AREA}$$; MW/m^2

Calculate Plasma Poloidal Field

$$BV = \frac{\mu_o \times Ip_{H\beta}}{2\pi a(SF)}$$; (T)

Fueling Calculations

$$\text{fusions/second} = \frac{POWER_{FUS} \times 10^6}{(17.6 \times 10^6)(1.602 \times 10^{-19})}$$

Burn Rate = 2 × fusions/second ; (D+T) atoms/second

$$\tau_p = \tau_E \text{ (assumption)}$$; particle confinement time for fueling

$$Q_{fuel} = \frac{N_I \times VOL}{\tau_p}$$; fueling rate [(D+T) atoms/second]

Fractional burnup = burn rate/Q_{fuel}

$$\text{Tritium flow} = \frac{Q_{fuel}}{2} \times \frac{3}{6.02 \times 10^{23}} \text{ ; tritium throughput (g/s)}$$

$$\text{Tritium Burn} = \frac{\text{FUSIONS}}{\text{second}} \times \frac{3}{6.02 \times 10^{23}} \text{ ; tritium burn rate (g/s)}$$

Plasma Volt-Seconds Calculation

If no rf, gamma = 1

If rf, gamma = input value

$$VS_{RES} = \text{gamma}(4\pi \times 10^{-7})\ R_o \left(\frac{\ell_i}{2}\right)\left(I_{pH\beta}\right) \text{ ; estimate of resistive volt-seconds during startup}$$

$$L_p = (4\pi \times 10^{-7})\ R_o \left[\frac{\ell_i}{2} + \ln\left(\frac{8(ar)}{\sqrt{\text{kappa}}}\right) - 2.0\right] \text{ ; plasma inductance (H) (ref. 4)}$$

$$VS_{IND} = Ip_{H\beta}\ L_p \text{ ; inductive volt-seconds during startup}$$

$$VS_{SU} = VS_{RES} + VS_{IND} \text{ ; total required vs during startup}$$

$$V = R_p Ip_{H\beta} \text{ ; plasma loop voltage during burn (V)}$$

Table 6 shows sample output for the physics module.

Table 6. Physics module sample output

time sequence (sec)

ramp	oh swng	beamht	burn	quench
30.00	6.00	6.00	100.00	10.00

general input data :

plasm shape	=	0.3	num. neutral beams	=	0.0
rf	=	1.0			

plasma input :

plasma radius (m)	=	1.300	safety factor	=	3.200
aspect ratio	=	3.850	impurity z	=	0.000
elongation	=	1.600	zeff	=	1.500
beta	=	0.052	gamma (res loss)	=	0.505
field on axis (t)	=	4.641	plasma int ind (li)	=	1.500
ion temp (Kev)	=	10.000	scrape of layer (m)	=	0.200
ele temp (Kev)	=	10.000	ip factor	=	1.298
ripple	=	0.830	burn press (torr)	=	1.000e-06
vert. field (t)	=	0.750	quench press (torr)	=	1.000e-04

plasma output :

major radius (m)	=	5.005	plasma-crnt-hb (ma)	=	6.505
plasma height (m)	=	2.080	plasma-crnt-lb (ma)	=	5.837
plasma volum (m3)	=	267.142	plasma volt-burn (v)	=	0.064
plasma ind (h)	=	1.2217e-05	plasma res-burn (ohm)	=	9.7783e-09
ion density (/m3)	=	1.2071e+20	beta poloidal	=	1.983
ele density (/m3)	=	1.2999e+20	beta poloidal/ar	=	0.515
impurity concent.	=	0.009	ind volt (sec)	=	79.469
impurity z	=	8.000	resis. volt (sec)	=	15.495
zeff	=	1.500	heating volt (sec)	=	0.000
			start-up volt (sec)	=	94.964
ntau (sec/m3)	=	2.5783e+20	fueling rate (d+t/sec)	=	1.6258e+22
taue (sec)	=	1.983	burn rate (d+t/sec)	=	3.1844e+20
taue-emp (sec)	=	2.417	fractional burn-up	=	0.0196
taue-tp (sec)	=	0.000	tritium flow (g/sec)	=	0.0405
taup (sec)	=	1.983	tritium burn (g/sec)	=	0.0008
			deuterium flow (g/sec)	=	0.0270
			deuterium burn (g/sec)	=	0.0005
sigv fact.	=	1.448			
time fact.	=	2.201			
brem. fact.	=	1.280			

quasi-steady state heating (mw)	=	27.887
heat capacity/heating time (mw)	=	26.947
peak heating power (mw)	=	54.834
beam energy (Kev)	=	0.000
tmax (Kev)	=	4.800
plasma edge neu. load (mw/m2)	=	1.05
fusion power (mw)	=	448.93
alpha (mw)	=	89.28
ohmic (mw)	=	0.33
brems. (mw)	=	14.63
ploss (mw)	=	66.88
aux. power (mw)	=	-8.09
q	=	ignited
ignition margin	=	1.10

REFERENCES

1. J. A. Schmidt, "Ignition Scaling," Princeton Plasma Physics Lab, Memo, Nov. 19, 1982.
2. Fusion Engineering Design Center Staff, ORNL/TM-7777, eds. C. A. Flanagan, D. Steiner, and G. E. Smith, Oak Ridge Natl. Lab., June 1981.
3. W. A. Houlberg et al., "Developments in Tokamak Transport Modeling," *Proc. ANS/ENS Topl. Mtg. Advances in Mathematical Methods for Nuclear Engineering Problems*, Munich, Federal Republic of Germany, Apr. 27-29, 1981.
4. S. K. Borowski, Y-K. M. Peng, and T. Kammash, "RF-Assisted Current Startup in the Fusion Engineering Device (FED)," ORNL/TM-8319, Oak Ridge Natl. Lab., August 1982.

2. TORUS MODULE

The torus module performs neutronics, geometric, and cost calculations. The neutronic portion determines the nuclear response in the shield and the TF coils. It includes (1) radiation dose in the insulator materials of the TF coils, (2) nuclear heating rate in the case and the winding materials of the TF coils, (3) atomic displacement in the copper stabilizer of the TF coils, (4) nuclear heating rate in the first wall and shielding material, and (5) dose equivalent one day after shutdown in the reactor building. The module has two modes of operation: A shield thickness may be specified and the resulting nuclear responses calculated or maximum values for the nuclear responses are defined and the shield thickness calculated to satisfy the most stringent nuclear response.

The torus weight and volume are based on either a D-shaped or a rectangular torus configuration. An option is available, for either torus configuration, to split the outboard shield and place only the amount necessary for magnet protection between the plasma and the outboard TF coil leg. The remainder of the outboard shielding, necessary for biological requirements, is placed outside of the outer TF coil leg. Weight, volume, surface area, and cost are determined for the torus components, which include the first wall, armor, bulk shield, and pumped limiter.

ASSUMPTIONS AND CONSTRAINTS FOR THE FIRST WALL/SHIELD MODULE

The neutronics portion of the First Wall/Shield Module is based on the neutronics model (see Attachment 1) with the following constraints imposed.

- Only two shield configurations are allowed in this version of the Tokamak Systems Code, namely, (1) a steel shield for the whole reactor with 5-cm carbon armor for the inboard first wall and (2) a tungsten shield for the inboard section with 5-cm carbon armor for the inboard first wall and a steel shield for the outboard shield. The two remaining configurations described in the neutronics

model, which use 2 cm of steel armor in place of the 5 cm of carbon armor for the inboard first wall, can be implemented at a later date if desired.

- The simplifying assumption is made that the outboard steel shield neutronics are little affected by the choice of steel or tungsten as the inboard shield material. The outboard steel shield neutronic algorithms developed in conjunction with a steel inboard shield are also used with the tungsten inboard shield in the torus code.
- The neutronic calculations are based on a carbon armor thickness of 5 cm and an equivalent outboard first wall thickness of 2 cm. Actual armor and first-wall thicknesses for the radial build calculation in the tokamak systems code may be specified by variable DFWI and DFWO.
- Two values are specified for the TF dewar thickness, namely, (1) the equivalent solid steel thickness used in the neutronics calculation, specified by the variable DDWEQ, and (2) the total dewar thickness used for radial build calculation specified by the variable DDW.
- The neutronics model has reference thicknesses of 0.05, 0.025, and 0.08 m for a spool, dewar, and TF case, respectively, downstream of the shield, as shown in Table 8 of Attachment 1. When one deviates from these values when executing the systems code, the effect is compensated for by an adjustment to the required inboard or outboard values of shield thicknesses or to the neutronic performance for input fixed values of shield thicknesses. If the shield is steel, the adjustment is equivalent since the dewar, case, and spool are all steel. If the shield is tungsten, the shield thickness adjustment is multiplied by 0.8 to account for an approximate equivalent thickness of tungsten. As an example, in the case of a steel shield, removing the 5-cm spool from the reference configuration requires an increase in shield thickness of 5 cm to achieve the same performance; or, for a fixed value of shield thickness, the effectiveness to attenuate neutrons is reduced by 5 cm. It should be noted that the tokamak system no longer considers a spool structure. Therefore, the input value of spool thickness is hardwired in the code as zero.

- Heating rates are calculated at the entrance to each component as a function of neutron wall loading and shield thickness. Fast neutron flux (energies greater than 0.1 MeV) is also calculated at the entrance to each component with the exception of the flux to the TF coil, which is calculated at the superconductor front surface. The neutron flux is attenuated as a function of the mean free path of the component material composition. Heating deposition in the TF coil was modeled as watts per meter of coil length, assuming all the neutrons transversing the shield are intercepted by the coil, which is the case for the inboard TF coil leg. To use this relationship to calculate the heat deposited in the outboard TF coil leg, an estimate is made to account for the window area between TF coil legs.
- Shutdown dose rate calculations are for 24 h after shutdown, assuming saturation conditions exist (i.e., the first wall has received a fluence of about 1 MWy/m^2).

INPUT

Major input items to the first wall shield module include the plasma dimensions, gaps between torus elements, radiation limits, nuclear heating limits, torus configuration option (either D-shaped or rectangular), an option to allow the TF coil outer leg to be embedded in the outboard shield, an option to choose either stainless steel or tungsten inboard shield, TF coil surface area, and unit cost factors. Table 7 lists input parameters (both user input and code-supplied input).

Table 7. First wall shield input parameters

Symbol	Description	Units	Source[a]
AVAIL	machine availability (annual)		
DENSTL	density of steel	kg/m^3	U
DENTUN	density of tungsten	kg/m^3	
DENB4C	density of boron carbide	kg/m^3	
ITORUS	1 D-shaped shield, 2 square shield with limiter	--	
IGLOO	1 allows coil to come through shield, 0 does not allow		
DFWI	inboard first wall thickness	m	
DWFO	outboard first wall thickness	m	
DI2	inboard gap between first wall and shield	m	
DLDO	outboard lead shield thickness	m	
DO2	outboard gap between first wall and shield	m	
DSHI	inboard shield thickness	m	
DSHO	outboard shield thickness	m	
DSHOM	minimum outboard shield thickness between plasma and magnet (used with IGLOO = 1 option only)	m	
IBDPC	fraction of total flux incident on the inboard wall		
IOPTSH	option to select inboard shield material: 0 = steel, 1 = tungsten		
LIFE	tokamak life	years	
MHTF	maximum heat rate at the TF coil case	MW/m^3	
MXDOSE	maximum dose rate to TF insulation	rad	U
OBDPC	fraction of total incident on the outboard wall	rad	U
SPLIT	fraction of alpha power to divertor or limiter		
UCSTL	unit cost steel	$/kg	
UCTUN	unit cost tungsten	$/kg	
UCB4C	unit cost boron carbide	$/kg	

Table 7 (continued)

Symbol	Description	Units	Source[a]
SPOOLT	thickness of spool (should be zero)	m	
DDWEQ	equivalent solid dewar thickness	m	
VOIFRC	void fraction of the shield		U
TBURN	burn time	s	C
TRAMP	OH ramp (charge) time	s	
TOH	OH swing time	s	
TQNCH	plasma quench time	s	
TBEAM	startup heating duration	s	
POWFMW	fusion power	MW	
RO	major radius	m	
a	plasma minor radius	m	
SCRAPL	plasma scrape-off thickness	m	
KAPPA, κ	plasma elongation		
PLSHAP	plasma triangularity		
TFLENG	TF coil circumference	m	
RIN	TF coil inside leg radius	m	C
RTOTL	TF coil outside leg radius	m	C
VOLCI	volume of copper insert	m^3	
TFNO	number of TF coils		
DDW	dewar thickness	m	
TFTHK	TF coil thickness	m	
TFSAO	surface area of the outboard leg of a single TF coil	m^2	C

[a]Source: U = Input is supplied by user;
C = Input flows in from other modules.

GOVERNING EQUATIONS

The neutronics calculations performed in this module are based on the detailed neutronics model included as Attachment 1.

Maximum Shutdown Dose Rate (Fixed)

MXSDDR = 2.5 , mrem/h (24 h after shutdown) (hardwired in code)

Duty Cycle

DCYCLE = TBURN/(TRAMP + TOHS + TBEAM + TBURN + TQNCH)

(See input list for definition of various time increments.)

Duty Factor

DFAC = DCYCLE × AVAIL ,

where AVAIL is the input availability.

Correction Factors

CORDH = SPOOLT - 0.05 (m)

CORTFH = SPOOLT + DDWEQ - 0.05 - 0.025 (m)

CORTFD = SPOOLT + DDWEQ + THKCAS - 0.05 - 0.02 - 0.08 (m)

The above three terms are used to correct the steel shield thickness by variation from base values of spool thickness, dewar metal thickness, and TF case thickness which were used in the detailed neutronics calculation. SPOOLT is the spool thickness which should always be input as zero (configuration no longer has a spool), DDWEQ is the equivalent solid dewar thickness, and THKCAS is the TF coil case.

TUNDH = 0.8 × CORDH

TUNTFH = 0.8 × CORTFH

TUNTFD = 0.8 × CORTFD

If tungsten is chosen as the inboard shield material, the above three variables correct the tungsten inboard shield thickness for variation in the steel spool, dewar, and TF case thickness.

Corrections to the outboard shield thickness are similar to the inboard except an outboard spool was not part of the configuration used in the detailed neutronics calculations. The inboard correction must be modified by 0.05 m to be applicable to the outboard.

CORTFHO = CORTFH + 0.05

CORTFDO = CORTFD + 0.05

TUNTFHO = 0.8 × CORTFO

TUNTFDO = 0.8 × CORTFDO

At this point, either subroutine SEGARA or subroutine TORUS is called, depending on the value of ITORUS, in order to calculate the value of the first-wall area designated as FWSUR.

Neutron Wall Loading

LW = 0.8 × POWFMW/FWSUR (MW/m^2) ,

where

POWFMW is the fusion power in MW and FWSUR is the surface area of the first wall in m^2.

Inboard Shield Thickness

If the inboard shield thickness, DSHI, is input greater than zero, then that value is used. If DSHI is input as zero, then the value of the required shield thickness is calculated as follows.

First, the required inboard shield thickness, DSHHI, to limit the nuclear heating in the TF coil case is determined.

If steel,

$$\mathrm{DSHHI} = \frac{\ln\left(\frac{5.539 \times \mathrm{LW}}{\mathrm{MHTF}}\right)}{13.67} - \mathrm{CORTFH} \quad (\mathrm{m}) \quad ,$$

where MHTF is the maximum nuclear heating in the TF coil case in MW/m^3.

If tungsten,

$$\mathrm{DSHHI} = \frac{\ln\left(\frac{8.49 \times \mathrm{LW}}{\mathrm{MHTF}}\right)}{17.87} - \mathrm{TUNTFH} \quad (\mathrm{m}) \quad .$$

Next, the inboard shield thickness required to limit the radiation dose to the TF electrical insulator is determined.

If steel,

$$\mathrm{DSHID} = \frac{\ln\left(\frac{6.455 \times 10^{12} \times \mathrm{LW} \times \mathrm{DFAC} \times \mathrm{LIFE}}{\mathrm{MXDOSE}}\right)}{13.83} - \mathrm{CORTFD} \quad (\mathrm{m}) \quad ,$$

where

LIFE is the tokamak lifetime in years and MXDOSE is the maximum dose to the TF coil in rads.

If tungsten,

$$DSHID = \frac{\ln\left(\frac{8.431 \times 10^{12} \times LW \times DFAC \times LIFE}{MXDOSE}\right)}{18.22} - TUNTFD \quad (m) \quad .$$

The required inboard shield thickness is set equal to the greater value of DSHHI or DSHID:

$$DSHI \geqslant DSHHI \text{ and/or } DSHID \quad .$$

Outboard Shield Thickness

The outboard shield thickness, DSHO, is determined in a similar manner as the inboard. An additional constraint, shutdown dose rate, is imposed. Only stainless steel is considered. If DSHO is input >0, then that value is used; if input is zero, the outboard shield thickness is calculated based on the following limits.

Nuclear heating rate limit:

$$DSHHO = \frac{\ln\left(\frac{5.539 \times LW}{MHTF}\right)}{13.67} - CORTFHO \quad (m) \quad .$$

Dose rate limit:

$$DSHOD = \frac{\ln\left(\frac{6.455 \times 10^{12} \times LW \times DFAC \times LIFE}{MXDOSE}\right)}{13.83} - CORTFDO \quad (m) \quad .$$

Shutdown dose rate:

$$DSHOSD = \frac{\ln\left(\frac{2.32 \times LW}{MXSDDR}\right)}{16.9} + 1.3 - CORDHO \quad (m) \quad ,$$

where

MXSDDR is hardwired as 2.5 mrem/h.

The outboard shield thickness is set equal to the largest value of DSHHO, DSHOD, and DSHOSD:

DSHO $\geqslant$ DSHHO and/or DSHOD and/or DSHOSD .

Shield Volume, Weight, Area

At this point, subroutine SEGARA or subroutine TORUS is called. Knowing the shield thickness and location, the volume, weight, and surface areas are calculated for either the D-shaped torus or rectangular torus. (See explanations of subroutines SEGARA and TORUS included at the end of this appendix section.)

TF Coil Geometry

At this point, the systems code exits the first-wall shield module and enters the TF coil module. The TF coil surface area is needed in the first-wall shield module in order to compute the total nuclear heating in the TF coil allowed by the selected shield thickness. The TF coil is configured to encircle the plasma plus shield or is configured based on a limiting ripple criteria at the plasma edge. If the igloo option is activated (i.e., the outer leg of the TF coil is allowed to be embedded in the outboard shield), then the TF coil encircles the plasma plus a minimum shield thickness (DSHOM) to protect the TF coil or is again set by ripple--whichever is the most stringent requirement.

If IGLOO = 1, then the minimum thickness to protect TF coils is the user input value DSHOM

DSHOP = DSHOM (m) ,

or

$$DSHOP = \text{value set by ripple} \geqslant DSHOM \quad (m) \ .$$

Recall that

$$DSHO = \text{total outboard shield thickness.}$$

(See the following appendix section on the TF module for additional information.)

At this point, the systems code driver returns the code to the first wall shield module.

Determine Inboard Heating Rates (for stainless steel inboard shield)

Heating rate at surface of carbon armor:

$$QFWI = 6.735 \times LW \qquad (MW/m^3) \ .$$

Heating rate at surface of inboard shield:

$$QSHI = 9.77 \times LW \qquad (MW/m^3) \ .$$

Heating rate at surface of TF dewar:

$$QDWI = 6.499 \times LW \times e^{[-13.65 \times (DSHI + CORDH)]} \qquad (MW/m^3) \ .$$

Heating rate at surface of TF case:

$$QTFI = 5.539 \times LW \times e^{[-13.67 \times (DSHI + CORTFH)]} \qquad (MW/m^3) \ .$$

Determine Inboard Heating Rates (for tungsten inboard shield)

(Refer to above definitions used for stainless steel inboard shields.)

$$QFWI = 7.03 \times LW \quad (MW/m^3) ,$$

$$QSHI = 18.82 \times LW \quad (MW/m^3) ,$$

$$QDWI = 9.527 \times LW \times e^{[-17.86 \times (DSHI + TUNDH)]} \quad (MW/m^3) ,$$

and

$$QTFI = 8.49 \times LW \times e^{[-17.87 \times (DSHI + TUNTF)]} \quad (MW/m^3) ,$$

Calculate Power Deposited in Inboard Region (for stainless steel inboard shield)

Power deposited in the armor:

$$PFWI = IBDPC \times 0.2 \times POWFMW \times (1 - SPLIT)$$
$$+ QFWI \times AFWI \times [1 - e^{-(13.72 \times 0.05)}]/13.72 \quad (MW) ,$$

where

IBDPC is fraction of the first wall/armor alpha power going to the inboard region;
SPLIT is fraction of alpha to limiter, and (1 - SPLIT) is the fraction at alpha power to the first wall/armor;
POWFMW is total fusion power in MW;
AFWI is area of inboard armor computed in subroutine SEGARA or subroutine TORUS.

The thickness of the armor is set at 5 cm for neutronic calculations. Note that the power to the armor is composed of two sources (the alpha power and the nuclear heating).

Power deposited in inboard stainless steel shield:

$$PSHI + QSHI \times ASHI \times [1.0 - e^{-(12.62 \times DSHI)}]/12.62 \quad (MW) ,$$

where

ASHI is the front area of the inboard shield from SEGARA or TORUS.

Calculate Power Deposited in Inboard Region of TF Coil

(In Attachment 1, power deposition in the TF coil is modeled as W/cm of coil length, assuming all neutrons transversing the shield are intercepted by the coils.)

$$PTFI = 11.89 \times LW \times e^{[-13.7 \times (DSHI + CORTFH)]} \times CHAMLI \times RFW/3.5 \quad (MW) ,$$

where

CHAMLI is the equivalent length of the TF coil inner leg calculated as

$$CHAMLI = 2 \times (a \times KAPPA + SCRAPL) \quad (m) .$$

RFW is radius of the first wall referenced to the tokamak centerline; 3.5 is a normalizing factor and is the radius of the first wall of the FED.

Calculate Power Deposition in Inboard Region (for tungsten inboard shield)

(See above definition used in stainless steel inboard shield.)

$$PFWI = IBDPC \times 0.2 \times POWFMW \times (1 - SPLIT) + QFWI \times AFWI$$
$$\times [e^{-(10.72 \times 0.05)}]/10.72 \quad (MW) ,$$

$$PSHI = QSHI \times ASHI \times [1.0 - e^{-(16.2 \times DSHI)}]/16.2 \qquad (MW) ,$$

and

$$PTFI = 17.93 \times LW \times e^{[-18 \times (DSHI + TUNTFH)]} \times CHAMLI \times RFW/3.5 \qquad (MW) .$$

Calculate the Neutron Flux (E > 0.1 MeV) in the Inboard Region (for stainless steel inboard shields)

Flux incident on armor:

$$FLFWI = 2.26 \times 10^{18} \times LW \qquad (neutron/s\text{-}m^2) .$$

Flux incident on inboard shield:

$$FLSHI = FLFWI \times e^{-(7.5 \times 0.05)} \qquad (neutron/s\text{-}m^2)$$

(assumes 5-cm-thick armor) .

Flux incident on dewar:

$$FLDWI = FLSHI \times e^{-[11.53 \times (DSHI + CORDH)]} \qquad (neutron/s\text{-}m^2) .$$

Flux incident on TF superconductor:

$$FLTFI = 1.694 \times 10^{18} \times LW \times e^{-[13.77 \times (DSHI + CORTFD)]} \qquad (neutron/s\text{-}m^2)$$

(E > 0.1 MeV) .

DPA in the copper stabilizer of TF coil:

$$DPTFI = 2.693 \times e^{-[13.89 \times (DSHI + CORTFD)]} \times LW \times DFAC \times LIFE$$

(displacements per atom).

Calculate the Neutron Flux (E > 0.1 MeV) in the Inboard Region (for tungsten inboard shields)

(See definitions in above stainless steel section.)

$$FLFWI = 2.58 \times 10^{18} \times LW \quad (\text{neutron/s-m}^2) ,$$

$$FLSHI = FLFWI \times e^{-(5.697 \times 0.05)} \quad (\text{neutron/s-m}^2)$$

(assumes 5-cm-thick armor) ,

$$FLDWI = FLSHI \times e^{-[15.47 \times (DSHI + TUNTFD)]} \quad (\text{neutron/s-m}^2) ,$$

$$FLTFI = 2.285 \times 10^{18} \times LW \times e^{-[18.21 \times (DSHI + TUNTFD)]} \quad (\text{neutron/s-m}^2)$$

(E > 0.1 MeV) ,

and

$$DPTFI = 3.342 \times e^{-[18.3 \times (DSHI + TUNTFD)]} \times LW \times DFAC \times LIFE$$

(displacements per atom) .

Calculate Heating Rates and Power Deposition in Outboard Regions

Heating rate at surface of first wall:

$$QFWO = 15 \times LW \quad (\text{MW/m}^3) .$$

Heating rate at surface of outboard shield:

$$QSHO = 14.74 \times LW \quad (\text{MW/m}^3)$$

(based on 2-cm SS first wall solid thickness) .

Heating rate at surface of TF dewar:

$$QTFDO = 6.499 \times LW \times e^{-[13.65 \times DSHO]} \quad (\text{MW/m}^3)$$

(if IGLOO = 1, DSHOP is used in above equation instead of DSHO) .

Heating rate at surface of TF coil case:

$$QTFO = 5.539 \times LW \times e^{-[13.67 \times (DSHO + CORTFHO)]}$$

(if IGLOO = 1, DSHO is used in above equation instead of DSHO) .

Power deposited in outboard first wall:

$$PFWO = (OBDPC + EBDPC) \times 0.2 \times POWFMW \times (1 - SPLIT) + QFWO$$

$$\times (AFWO + AFWE) \times [1 - e^{-(13.62 \times FWOEQ)}]/13.62 \quad (MW) ,$$

where

OBDPC is fraction of the first wall/armor alpha power to outboard region;

EBDPC is fraction of the first wall/armor alpha power to end regions;

SPLIT is fraction of alpha power to the limiter and (1 - SPLIT) is the fraction of alpha power to the armor/first wall;

POWFMW is total fusion power in megawatts;

AFWO and AFWE are areas of the outboard and end regions of the first wall calculated in subroutines SEGARA or TORUS;

FWOEQ is the equivalent solid first-wall thickness in meters (hardwired in at 0.02 m).

Note that the power in the first wall is from two sources: alpha power and nuclear heating.

Power deposited in outboard shield:

$$PSHO = QSHO \times (ASHE2 + ASHO3 + ASHO4) \times [1 - e^{-(14.7 \times DSHO)}]/14.74 \quad (MW) ,$$

where

ASHE2, ASHO3, and ASHO4 are the front surface areas of top, bottom, and ends of the torus as calculated in subroutine SEGARA and subroutine TORUS.

Power deposited in outboard region of TF coil:

$$PTFO = 11.89 \times LW \times e^{-[13.7 \times (DSHO + CORTFHO)]} \times CHAMLQ \times TFSAO \times (TFNO/SURF) \times RFW/3.5 \quad (MW)$$

(if IGLOO = 1, DSHOP is used in above equation instead of DSHO),

where

TFSAO is the outboard TF coil area of a single coil calculated in the TF module;

TFNO is the number of TF coils;

SURF is the surface area obtained by rotating the TF outer leg about the average radius of the TF coil;

where the equivalent TF outer leg length is given by

$$CHAMLQ = CHAMLN - CHAMLI \quad (m) \;;$$

where

CHAMLN is the total poloidal vacuum vessel circumference calculated in subroutines TORUS and SEGARA

and

$$SURF = (2\pi)(LENTFO)\,\frac{(RIN + RTOTL)}{2} \qquad (m^2) \;,$$

where

RIN is the TF coil inner radius from tokamak center;
RTOTL is the TF coil outer radius from tokamak center.

The calculation for heat deposition in the outer TF coil legs is similar to that for the inner legs except that a correction has been added for the open space between adjacent TF coil outer legs. (Recall that the algorithm was derived as W/cm of length, assuming all neutrons were intercepted.)

Calculate the Neutron Flux (E > 0.1 MeV) in the Outboard Region

Flux incident on first wall:

$$FLFWO = 2.58 \times 10^{18} \times LW \qquad (\text{neutron/s-m}^2)$$

Flux incident on outboard shield:

$$FLSHO = FLFWO \times e^{-(9.73 \times FWOEQ)} \qquad (\text{neutron/s-m}^2) \ ,$$

where

FWOEQ is the equivalent solid thickness of the first wall (a value of 0.02 m is hardwired into the module).

Flux incident on dewar:

$$FLTFDO = FLSHO \times e^{-(10.56 \times DSHO)} \qquad (\text{neutron/s-m}^2)$$

(if IGLOO = 1, DSHOP is used in the above equation instead of DSHO to compute flux incident on TF dewar; however, even if IGLOO = 1, the value of FLTFDO calculated with DSHO (the total outboard shield thickness) is the value of neutron flux transmitted to the reactor cell to compute wall thickness for environmental protection).

Flux incident on TF superconductor:

$$FLTFO = 1.68 \times 10^{18} \times LW \times e^{-[13.77 \times (DSHO + CORTFDO)]} \qquad (\text{neutron/s-m}^2) \ ;$$

(if IGLOO = 1, DSHOP is used in the above equation instead of DSHO).

DPA to outboard TF copper matrix:

$$DPTFO = 2.691 \times e^{-[13.89 \times (DSHO + CORTFDO)]} \times LW \times DFAC \times LIFE$$

(displacements per atom);

(if IGLOO = 1, DSHOP is used in the above equation instead of DSHO).

Calculate Shutdown Dose Rate (24 h after shutdown)

$$SDDR = 2.32 \times LW \times e^{-[16.9 \times (DSHO - 1.3 + CORDHO)]} \quad \text{(mrem/h)} ;$$

(above equation valid after saturation; i.e., after about 1 MWh/m^2 at the first wall).

Calculate Dose to Inboard TF Electrical Insulation

For stainless steel inboard shielding:

$$DOSEI = 6.455 \times 10^{12} \times LW \times DFAC \times LIFE \times e^{-[13.83 \times (DSHI + CORTFD)]} \quad \text{(rad)} .$$

For tungsten inboard shielding:

$$DOSEI = 8.43 \times 10^{12} \times LW \times DFAC \times LIFE \times e^{-[18.22 \times (DSHI + TUNTFD)]} \quad \text{(rad)} .$$

Calculate Dose to Outboard TF Coil

$$DOSEO = 6.455 \times 10^{12} \times LW \times DFAC \times LIFE \times e^{-[13.83 \times (DSHO + CORTFDO)]} \quad \text{(rad)} ;$$

(if IGLOO = 1, DSHOP is used in the above equation instead of DSHO).

Calculate Cost of Various Torus Components

(Cost calculations shown are for the shield configuration ITORUS = 2; i.e., the rectangular torus. Procedure is similar for ITORUS = 1, the D-shaped torus.)

Shield cost (stainless steel design)

80% of total volume is steel;

10% of top, bottom, and outboard is boron carbide.

Remove volume of copper insert embedded in shield if there is a copper insert.

$$VTOTDM = VTOT - VOLCI \qquad (m^3) ,$$

where

VTOT is the total shield volume (calculated in TORUS subroutine);

VOLCI is the volume of the copper insert (calculated in TF module).

Cost of steel portion of shield:

$$CSTEEL = VTOTDM \times (1 - VOIFRC) \times UCSTL \times DENSTL \qquad (\$) ,$$

where

VOIFRC is the input void fraction;

UCSTL is the input unit cost of steel;

DENSTL is the input density of steel.

Cost of boron carbide in shield:

$$CB4C = (VTOP + VBOT + VOUTBD) \times 0.1 \times DENB4C \times UCB4C \qquad (\$) ,$$

where

VTOP is volume of top of torus from subroutine TORUS;
VBOT is volume of bottom of torus from subroutine TORUS;
VOUTBD is volume of outboard shield from subroutine TORUS;
DENB4C is input density of boron carbide;
UCB4C is input unit cost of boron carbide.
(10% of the shield volume is assumed boron carbide.)

Cost of bulk shield:

$$TCBS = (CSTEEL + CB4C)/10^6 \qquad (\$ \text{ million}) .$$

<u>Shield cost</u> (tungsten design)

80% of inboard volume is tungsten;

10% of inboard volume is steel.

Cost of steel portion of shield in outboard, top, and bottom:

$$CSTEEL = (VTOP + VBOT + VOUTBD - VOLCI) \times (1 - VOIFRC) \times UCSTL \times DENSTL ,$$

where

VTOP is the volume of the shield top from subroutine TORUS;
VBOT is the volume of the shield bottom from subroutine TORUS;
VOUTBD is the volume of the shield outboard from subroutine TORUS;
VOIFRC is the input void fraction;
UCSTL is the input unit cost of steel;
DENSTL is the input density of steel.

Cost of boron carbide portion of shield in top, bottom, and outboard:

$$CB4C = (VTOP + VBOT + VOUTBD) \times 0.1 \times DENB4C \times UCB4C \quad .$$

Cost of inboard shielding:

$$CINBD = VINBD \times 0.1 \times UCSTL \times DENSTL + VINBD \times 0.8 \times UCTUN \times DENTUN ,$$

where

VINBD is the inboard shield volume calculated in subroutine TORUS;
UCTUN is the input unit cost of tungsten;
DENTUN is the input density of tungsten.

Cost of bulk shield (tungsten option):

$$TCBS = (CSTEEL + CB4C + CINBD)/10^6 \qquad (\$ \text{ million}) .$$

Cost of first wall (outboard stainless steel panels)

$$CFW = 22500 \times FWAREA/10^6 \qquad (\$ \text{ million}) ,$$

where

22500 is $\$/m^2$;

FWAREA is first-wall surface area calculated in subroutine TORUS.

Cost of graphite armor

$$CARMOR = 8800 \times AARMOR/10^6 \qquad (\$ \text{ million}) ,$$

where

8800 is $\$/m^2$;

AARMOR is surface area of inboard armor calculated in subroutine TORUS.

Cost of limiter blades

The pumped limiter forms a toroidal disk at the bottom of the plasma. The center is assumed to be the plasma major radius of the plasma. The width (L) scaled by the plasma minor radius from the FED geometry as

$$L = a \times 1.4/1.3 \quad .$$

The limiter area is, therefore,

$$ALIM = \left[\left(R_o + \frac{L}{2}\right)^2 - \left(R_o - \frac{L}{2}\right)^2 \right] ,$$

where

R_o is the major radius.

Cost of limiter:

$$CLIM = 61000 \times ALIM/10^6 \quad . \qquad (\$ \text{ million}) \quad .$$

SUBROUTINE SEGARA

(ITORUS = 1)

This subroutine calculates the volume and surface area for a D-shaped torus. A 22.5° shield segment, shown in Fig. 4, is formed around the plasma by calculating surface areas at each of five locations progressing away from the plasma. The surfaces are indicated in Fig. 5. The first location is the surface of the first wall. Succeeding locations are at the outside of the first wall, inside surface of the shield, outside surface of the shield, and outside surface of a lead layer. The inside surface of the first wall is defined by the following equations.

Inboard surface: $R_1 = RO - A - SPI, \; H_1 = A \times KAPPA + SPO$,

Outboard surface: $R_4 = RO + A + SPO, \; H_4 = 1/3(H_1)$,

where

A = plasma minor radius
RO = major radius
KAPPA = plasma elongation
SPI = inboard distance from plasma to first wall
SPO = outboard distance from plasma to first wall
R_1 = radius to inboard first wall
H_1 = one-half of the maximum first-wall height
R_4 = radius to outboard first wall
H_4 = one-half of the minimum first-wall height .

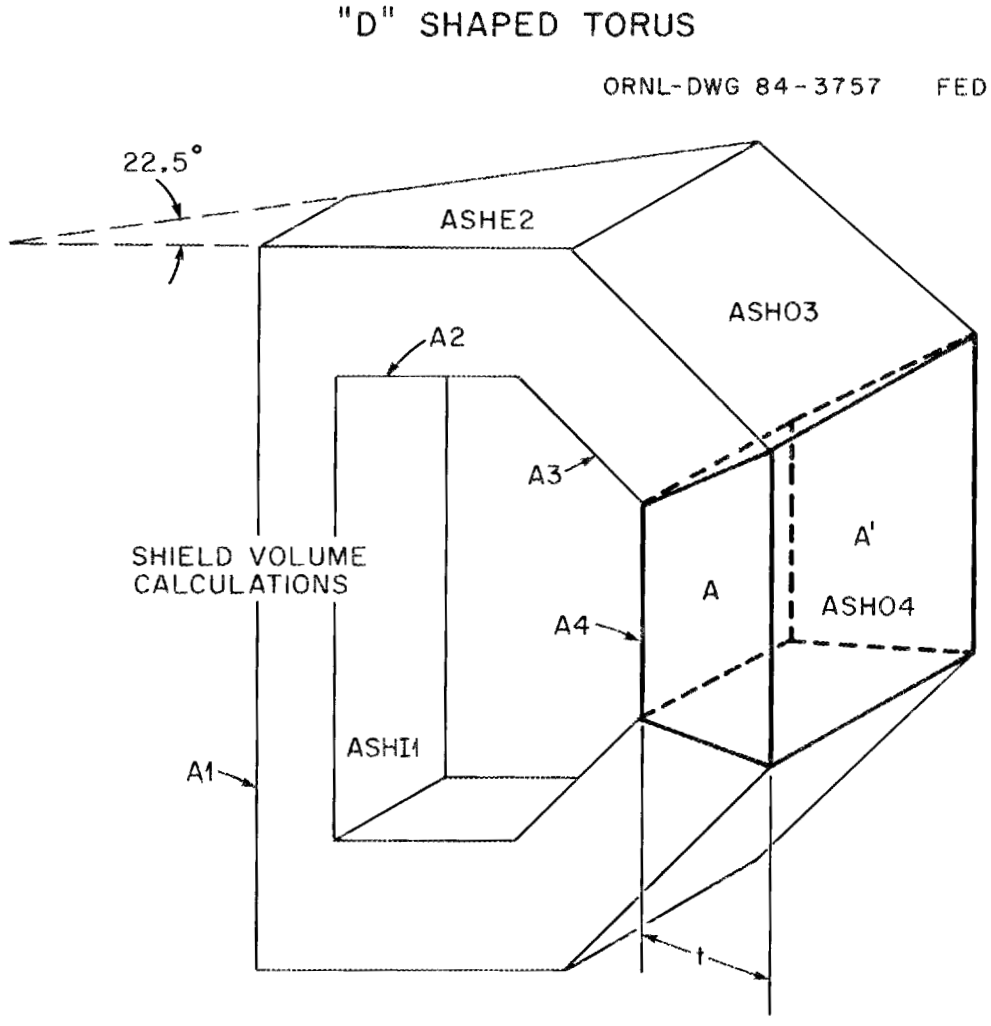

Fig. 4. Shield torus segment.

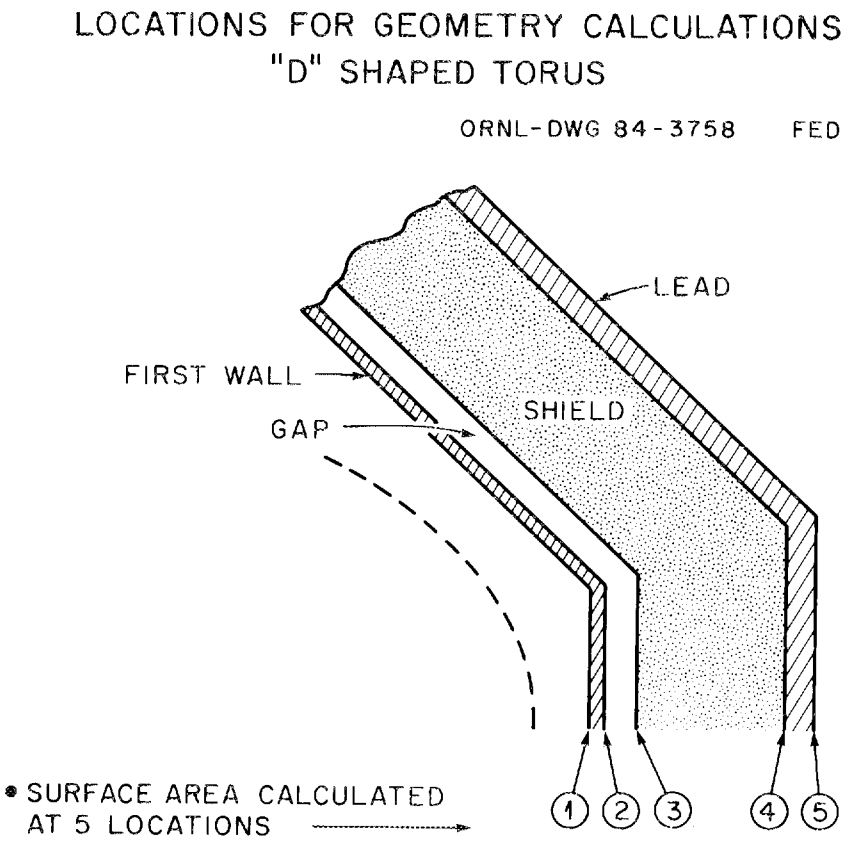

Fig. 5. Locations for geometry calculations, "D" shaped torus.

Top and bottom surface geometry is given by

$$A2 = (R_4 - R_1) \times 0.5 \times (W_1 + W_{23}) \quad ,$$

where

$A2$ = top and bottom first-wall surface area,

W_1 = inboard first-wall segment width,

W_{23} = first-wall width at the major axis.

The outboard 45° corners are tangent to the plasma scrape-off region. The geometric locations are defined to be

$$(R_o, H_1) \text{ and } (R_4, H_{1/3}) \quad .$$

Radii and heights are determined for each of the five locations through the shield by looping through the subroutine SEGARA with increasing thickness. Widths of the torus module are calculated as follows:

$$W_1 = R_1 \times 2 \times \tan(\alpha/2) \quad ,$$

$$W_{23} = R_o \times 2 \times \tan(\alpha/2) \quad ,$$

$$W_3 = R_4 \times 2 \times \tan(\alpha/2) \quad ,$$

where

$\alpha = 22.5°$,

W_1 = inboard first-wall segment width,

W_{23} = first-wall width at the major axis,

W_3 = outboard first-wall segment width.

These widths are indicated in Fig. 6.

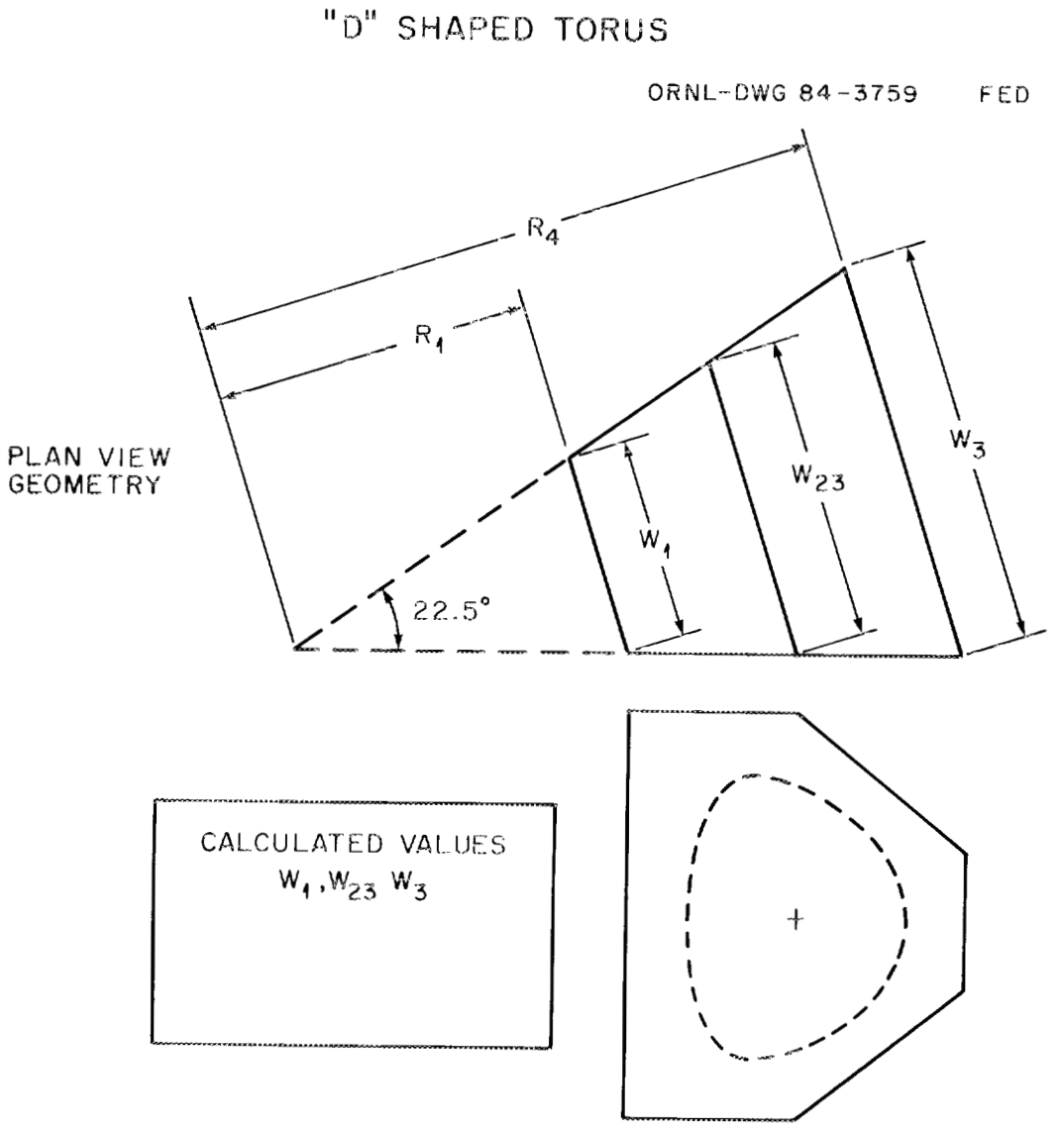

Fig. 6. "D" shaped torus.

Volumes of sections of the module are calculated using the formula for the frustrum of a pyramid; that is, using inner and outer surface areas and the section thicknesses as indicated in Fig. 4. A typical volume is defined as

$$
\begin{aligned}
VOL &= SHVI + SHVO + SHVE \\
&= 1/3(DSHI)(ASHI1 + A1 + \sqrt{ASHI1 \times A1}) + 1/3(DSHO) \\
&\times (ASHO3 + A3 + \sqrt{ASHO3 \times A3} + ASHO4 + A4 \\
&+ \sqrt{ASHO4 + A4}) + 1/3(DSHO)\ (ASHE2 + A2 + \sqrt{ASHE2 \times A2}) \quad ,
\end{aligned}
$$

where

SHVI = segmented inboard shield volume,
SHVO = segmented outboard shield volume,
SHVE = segmented end bulk shield volume,
DSHI = inboard shield thickness,
DSHO = outboard shield thickness,
ASHI1 = frontside area of inboard bulk shield,
A1 = backside area of inboard bulk shield,
ASHO3 = frontside area of hypotenuse bulk shield,
A3 = backside area of hypotenuse bulk shield,
ASHO4 = frontside area of outboard bulk shield,
A4 = backside area of outboard bulk shield,
ASHE2 = frontside area of end bulk shield,
A2 = backside area of end bulk shield.

Figure 4 also shows all the surface areas defined above.

The surface areas and module volumes are multiplied by 16 (internal to the code) to obtain values for the full torus.

The shield volume is then multiplied by 1.0 minus the input void fraction (VOIFRC) to account for the portion of shielding that is water:

$$VOLUME = 16 \times VOL \times (1 - VOIFRC) \quad .$$

SUBROUTINE TORUS

(ITORUS = 2)

This shield option recognizes that torus designs have become very complex geometrically in the sense that the shield tends to be divided into many modules, shielding extends radially outward between toroidal field coil legs, and additional shielding is needed outboard of the TF coil. The simple approach defined in this option provides a reasonable representation of these requirements. It should be pointed out, however, that with this configuration the TF coil outer leg is not necessarily embedded in the outboard shield. If one specified IGLOO = 0, the TF outer leg will be sized to encircle the total outboard shield thickness. Even if IGLOO = 1, which allows embedding the TF leg in the shield, the magnetic field ripple requirement at the plasma edge may be such that the outer TF leg is sized such that it also completely encircles the total outboard shield.

The shield is represented by the cross section shown in Fig. 7. Volume is based on a toroidal revolution of the section shown. The volume is therefore represented by disks at the top and bottom and by three cylinders.

Radii R_1 through R_6 define the inner and outer radii of the three shield cylinders, as shown and defined in Fig. 8. The vertical distances from the plasma center to the inside of the shield surfaces, H_{T_1} and H_{B_1}, are also shown and defined in Fig. 8. Calculations to define these dimensions are as follows.

RADII (Figs. 8 and 9)

$$R_1 = R_o - a - SCRAPL - DFWI - DI2 - DSHI \qquad (m) \quad ,$$

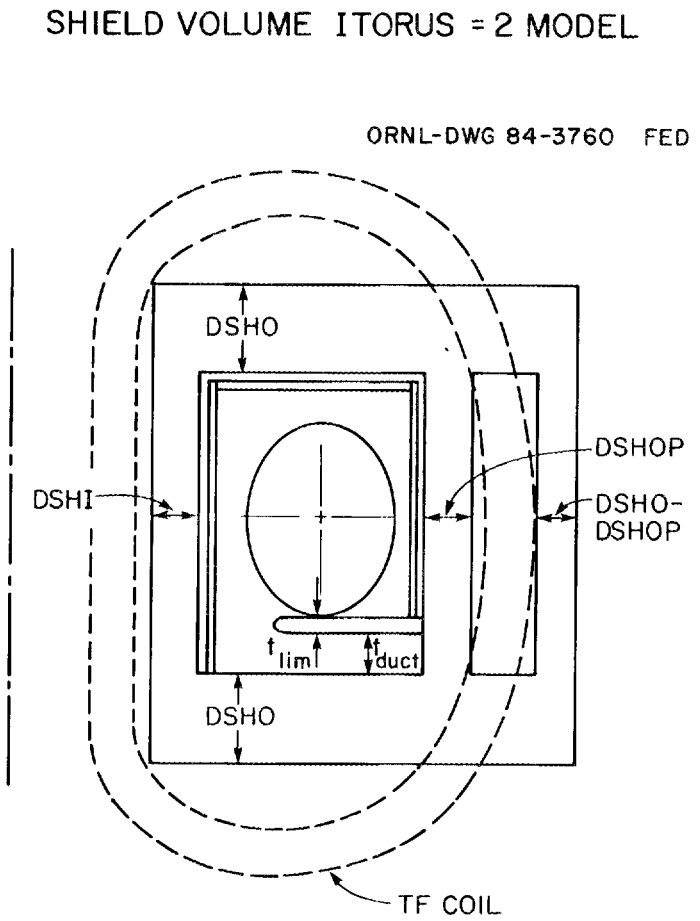

Fig. 7. Shield volume ITORUS = 2 model.

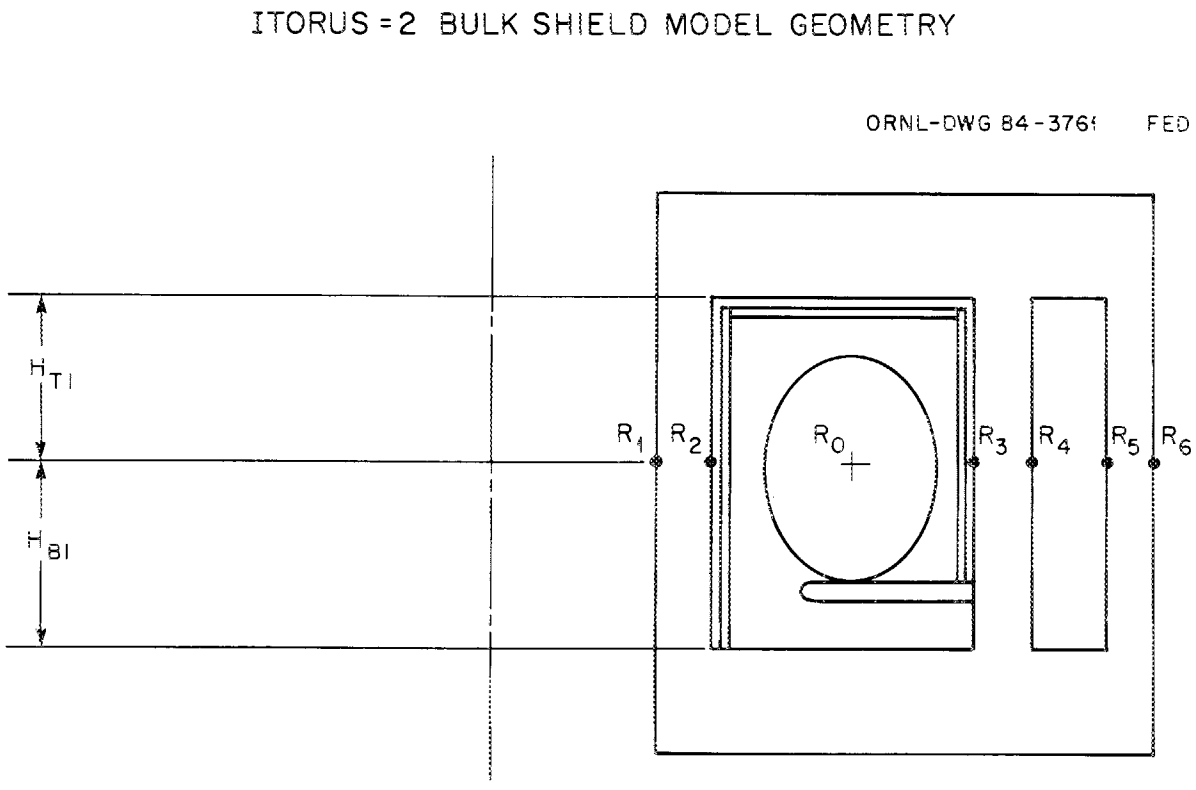

Fig. 8. ITORUS = 2 bulk shield model geometry.

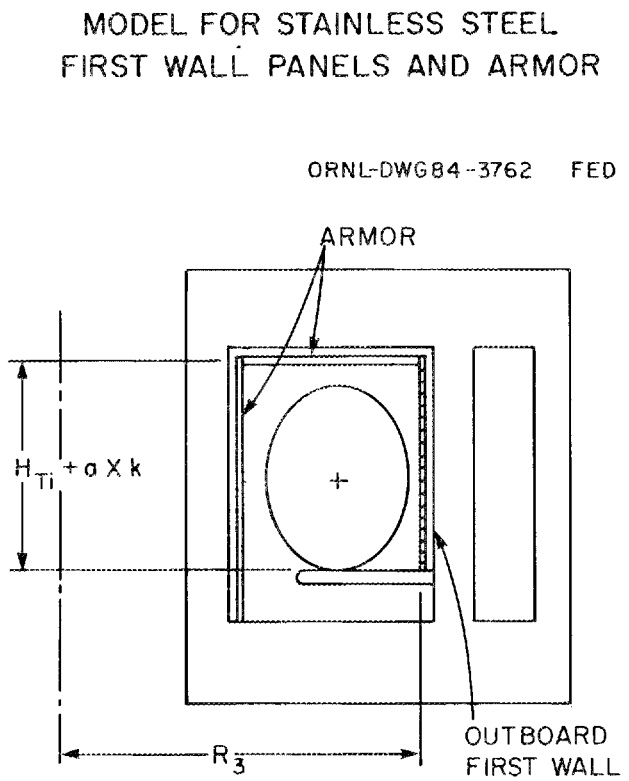

Fig. 9. Model for stainless steel first wall panels and armor.

where

R_o is the major radius,
a is the plasma minor radius,
SCRAPL is the scrape-off thickness,
DFWI is the armor thickness,
DI2 is a gap between armor and shield,
DSHI is the inboard shield thickness.

$$R_2 = R_1 + DSHI \qquad (m)$$

$$R_3 = R_o + a + SCRAPL + DFWO + DO2 \qquad (m) \quad ,$$

where

DFWO is the outboard first-wall thickness,
DO2 is a gap between first wall and outboard shield.

$$R_{CLEAR} = R_3 + DSHO \qquad (m) \quad ,$$

where

DSHO is the total outboard shield thickness.

At this point, a test is made to determine if the TF coil outer leg dimension (transferred from the TF module) is greater than R_{CLEAR}. If it is, R_4, R_5, and R_6 are equal to R_3. If the TF coil outer leg dimension is less than R_{CLEAR}, then the leg is embedded in the shield, and calculations for R_4, R_5, and R_6 are made as follows:

$$R_4 = R_3 + DSHOP \qquad (m) \quad ,$$

where

DSHOP is the shield thickness inboard of the TF coil outer leg. Value is transferred from TF module and is $\gtrsim$ DSHOM, where DSHOM is the input minimum shield thickness to protect the TF coil.

$$R_5 = R_4 + DDW + TFTHK + DDW + DAGO \qquad (m) \quad ,$$

where

DDW is the TF dewar thickness,
TFTHK is the TF coil thickness,
DAGO is the input gap between the outboard shield and TF coil.

$$R_6 = R_5 + DSHO - DSHOP \qquad (m) \ .$$

HEIGHT TO TOP

$$HT_1 = a \times \kappa + SCRAPL + DFWI + DI2 \qquad (m) \ ,$$

where

κ is the plasma elongation.

THICKNESS OF LIMITER (Fig. 7)

$$TLIM = 0.3 \times a/1.3 \qquad (m) \ ,$$

scaled from a point design.

THICKNESS OF PUMP DUCT (Fig. 7)

$$T_{DUCT} = 0.3 \times a \times \sqrt{\kappa} \qquad (m) \ ,$$

scaled from a point design.

HEIGHT TO BOTTOM

$$H_{B1} = a \times \kappa \times TLIM + T_{DUCT} \qquad (m) \ .$$

PERIMETER OF CHAMBER (inside dimension)

$$CHAMLN = [(HT_1 - DFWI - DI2) + H_{B1}] \times 2.0 + (a + SCRAPL) \times 4.0 \qquad (m) \ .$$

Shield volumes are defined as follows.

Top and bottom disk:

$$V_T = DSHO\ \pi(R_6^2 - R_1^2) \ .$$

Inboard:

$$V_I = (H_{T1} + H_{B1})\ \ \pi(R_2^2 - R_1^2) \ .$$

Outboard:

$$V_0 = (H_{T1} + H_{B1})\ \pi[(R_4^2 - R_3^2) + (R_6^2 - R_5^2)] \ .$$

SURFACE AREA OF ARMOR (Figs. 8 and 9)

$$AARMOR = \pi[R_3^2 - R_2^2] + 2\pi R_2(H_{T1} + a \times \kappa + t_{LIM}) \qquad (m^2) \ .$$

SURFACE AREA OF FIRST WALL (Figs. 8 and 9)

$$FWAREA = 2\pi R_3(H_{T1} + a \times \kappa) \ .$$

SHIELD SURFACE AREAS (inside faces) (Fig. 5)

(needed in shield power deposition calculation)

Inboard:

$$ASHI = 2\pi \times R_2 \times (H_{T1} + H_{B1}) \ .$$

Outboard:

$$ASHO4 = 2\pi \times R_3 \times (H_{T1} + H_{B1}) \ .$$

Top:

$$ASHE2 = \pi(R_3^2 - R_2^2) \times 2 \quad .$$

SURFACE AREA ADJACENT TO PLASMA
(needed in first-wall/armor power deposition calculations)

Inboard:

$$AFWI = 2\pi \times (R_2 + DFWI)(H_{T1} + H_{B1}) \quad .$$

Outboard:

$$AFWO = 2\pi \times (R_3 - DFWO)(H_{T1} + H_{B1}) \quad .$$

Top and bottom:

$$AFWE = \pi[(R_3 - DFWO)^2 - (R_2 + DFWI)^2] \times 2 \quad .$$

TOTAL

$$FWSUR = AFWI + AFWO + AFWE \quad .$$

ATTACHMENT 1

NEUTRONICS MODEL

The neutronics model developed for the tokamak systems code is based on the FED design configuration[1] shown in Table 8. Two shielding options, steel and tungsten, are included in the model for the inboard section of the reactor with steel shield for the outboard section. The shield compositions for the two options are as follows: (1) 80% type 316 steel, 10% B_4C, and 10% H_2O for steel shield; and (2) 80% W, 10% type 316 steel, and 10% H_2O for tungsten shield. The choice of these compositions is based on the homogeneous optimization study[2] for a D-T

Table 8. Geometrical model and zone compositions for the neutronics model

Zone description	Radius (cm) From	Radius (cm) To	Thickness (cm)	Composition volume percentage
TF coil case	174	182	8	100% type 136 steel
TF coil winding	182	239	57	5% NbTi, 23% Cu, 19% He, 45% type 316 steel, 8% insulator
TF coil case	239	247	8	100% type 136 steel
Thermal insulator	247	264.5	17.5	1% insulator
TF dewar	264.5	267	2.5	100% type 316 steel
Gap	267	277	10	Vacuum
Spool structure	277	282	5	100% type 316 steel
Gap	282	285	3	Vacuum
Inboard shield[a]	285	345	60	80% type 316 steel, 10% B_4C, 10% H_2O
Armor	345	350	5	100% carbon
Scrape-off	350	370	20	Vacuum
Plasma	370	630	260	Vacuum
Scrape-off	630	650	20	Vacuum
First wall	650	652	2	50% type 316 steel, 50% H_2O
Outboard shield	652	780	128	80% type 316 steel, 10% B_4C, 10% H_2O
Structure	780	790	10	100% type 316 steel
Lead shield	790	795	5	100% Pb

[a]A composition of 80% tungsten, 10% type 316 steel, and 10% H_2O is used for tungsten shield.

neutron exposure of ∿1 to 6 MWy/m^2 at the first wall. Two armor materials for the inboard first wall are included in the model for each shielding option.

The neutronics calculations for the model were performed using the discrete ordinate code ANISN[3] with S_8 symmetric angular quadrature set and P_3 legendre expansion for the scattering cross sections. A 67 multigroup cross section (46 neutrons and 21 protrons) collapsed from the CTR library[4] was used for ANISN calculations. The MACKLIB[5] was employed to calculate the nuclear responses (nuclear heating, radiation damage, gas production, etc.). For dose equivalent after shutdown, the calculations follow the ANISN-RACC-ANISN path.[6,7] The ANISN code was first used to obtain the steady-state neutron fluxes in each internal of the geometry. These fluxes, after normalization for the proper neutron wall loading at the first wall, were used by the RACC code to generate the decay gamma source distributions for various operating times and decay periods after shutdown. Decay gamma transport was then performed with the ANISN code to obtain the dose equivalent for each gamma source distribution. The dose equivalent results adopted for this model assume the following parameters: (a) a 1-MW/m^2 neutron wall loading at the first wall, (b) a 1-year operating time, and (c) a 1-day decay time after shutdown.

A parametric study was performed to generate nuclear responses as a function of the shield thickness (inboard and outboard) using a homogeneous shield composition for both types of shield, type 316 steel and tungsten. As an example, Figs. 10 through 16 are plots of the different nuclear responses calculated for both shields with carbon armor. All these results are normalized to 1-MW/m^2 D-T neutron wall loading or 1-MWy/m^2 D-T neutron exposure at the first wall. Figure 10 gives the dose in the thermal insulator as a function of the shield thickness for both shields. The tungsten shield reduces the electrical insulator dose by a factor of 10 compared to the steel shield at 60-cm shield thickness. The maximum dose in the electrical insulator is 0.23 times the thermal for both shields. Figure 12 gives the maximum nuclear heating in the case and the dewar of the TF coils. The total nuclear

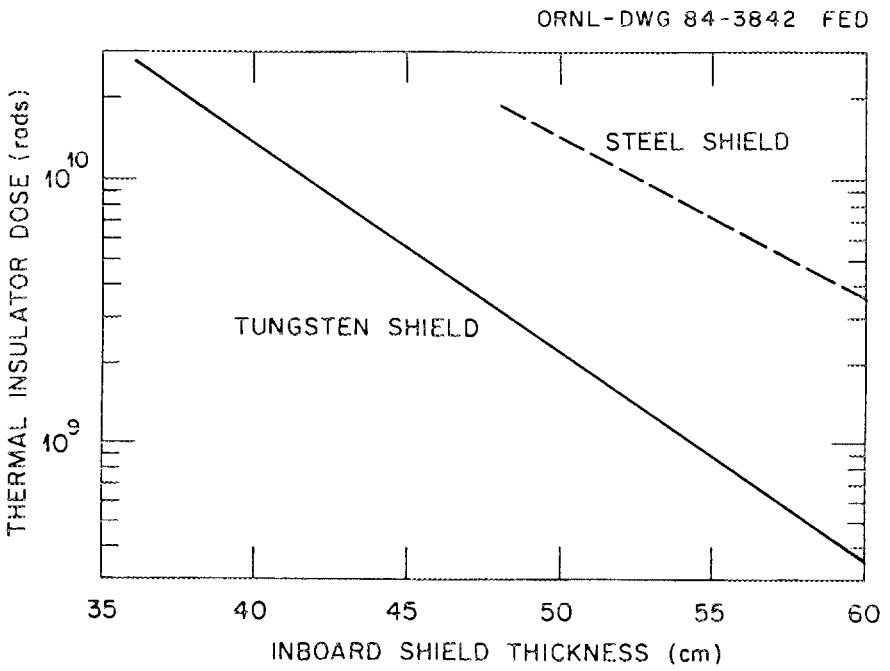

Fig. 10. Maximum dose in the thermal insulator normalized to 1 MWy/m^2 DT neutron exposure at the first wall as a function of the inboard shield thickness for tungsten and steel shield.

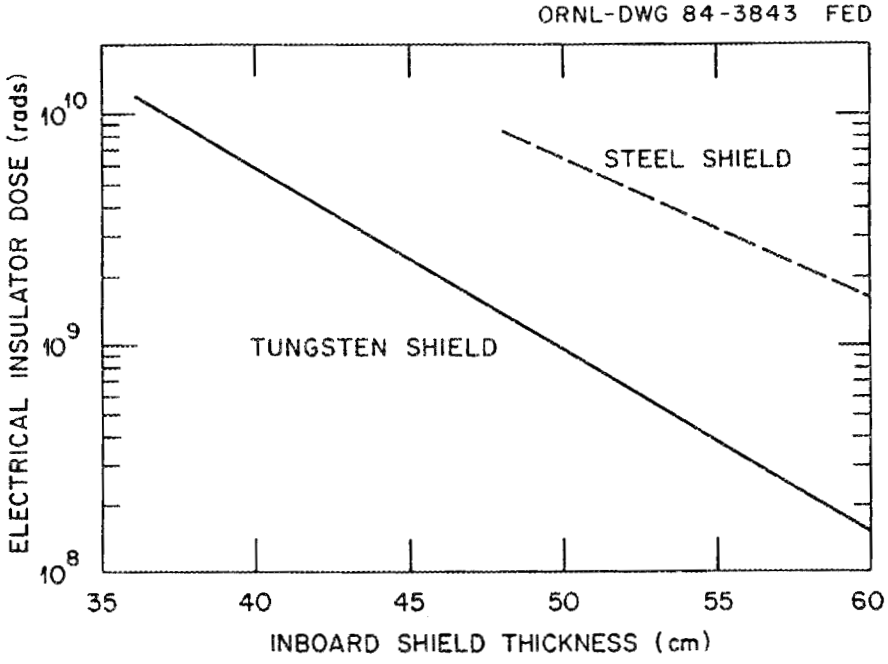

Fig. 11. Maximum dose in the electrical insulator normalized to 1 MWy/m^2 DT neutron exposure at the first wall as a function of the inboard shield thickness for tungsten and steel shield.

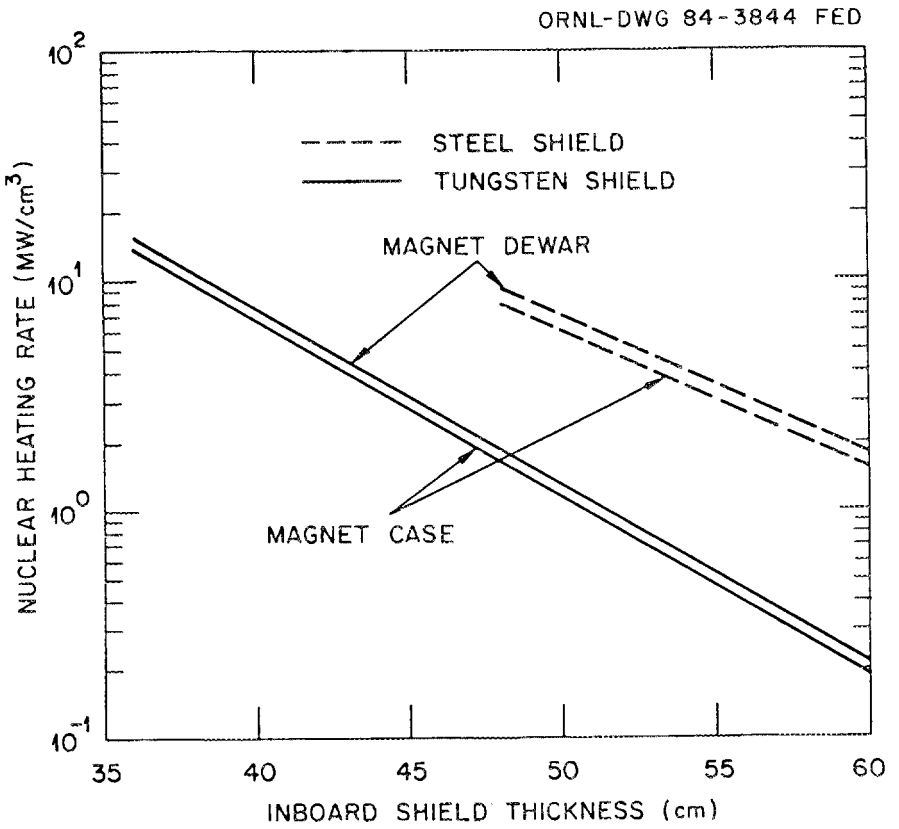

Fig. 12. Maximum nuclear heating in the dewar case of the TF coils nomralized to 1 MW/m^2 neutron wall loading at the first wall as a function of the inboard shield thickness for steel and tungsten shield.

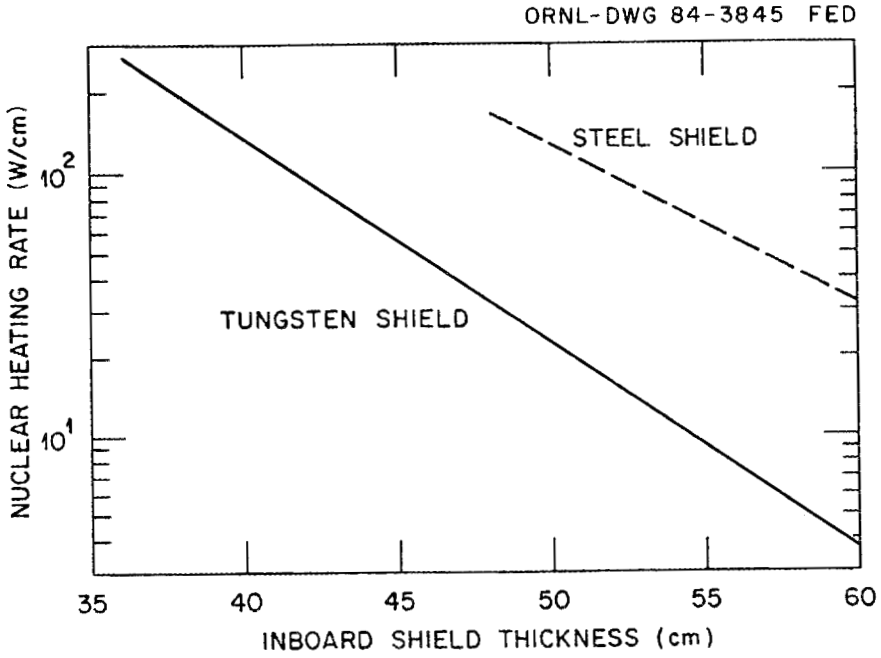

Fig. 13. Nuclear heating in the TF coils (winding materials and case) per unit length at midplane normalized to 1 MW/m^2 neutron wall loading of the first wall as a function of the inboard shield thickness for tungsten and steel shield.

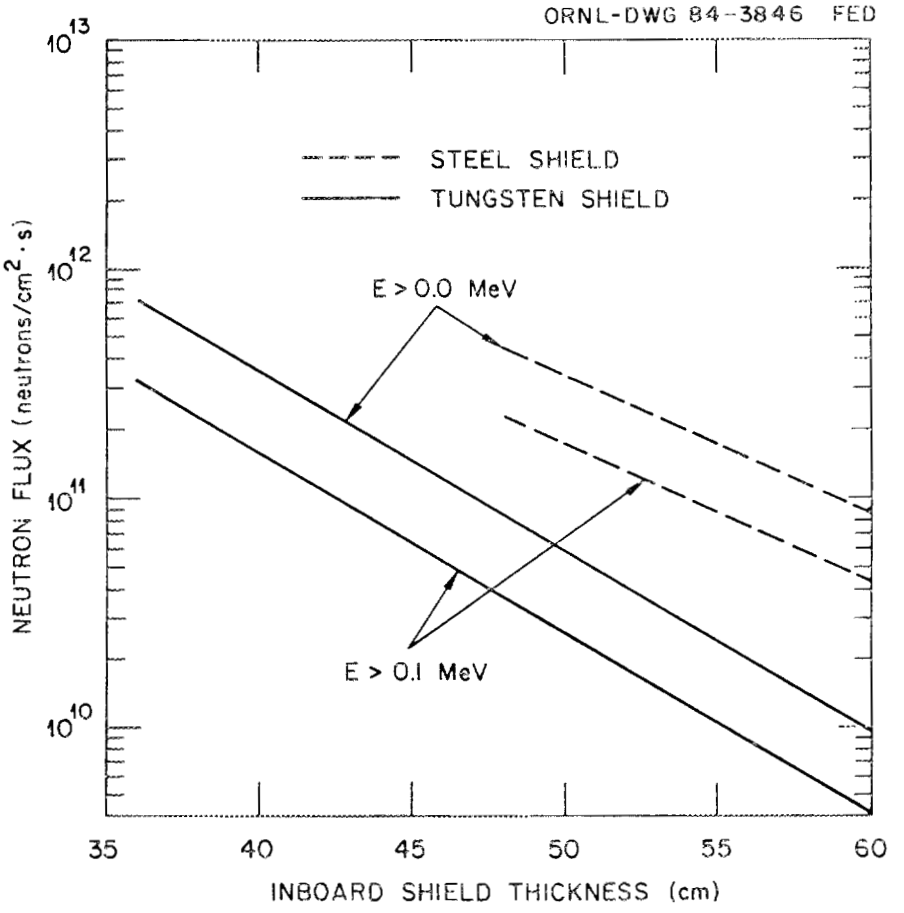

Fig. 14. Maximum neutron flux in the superconductor material normalized to 1 MW/m^2 neutron wall loading at the first wall as a function of the inboard shield thickness and steel shield.

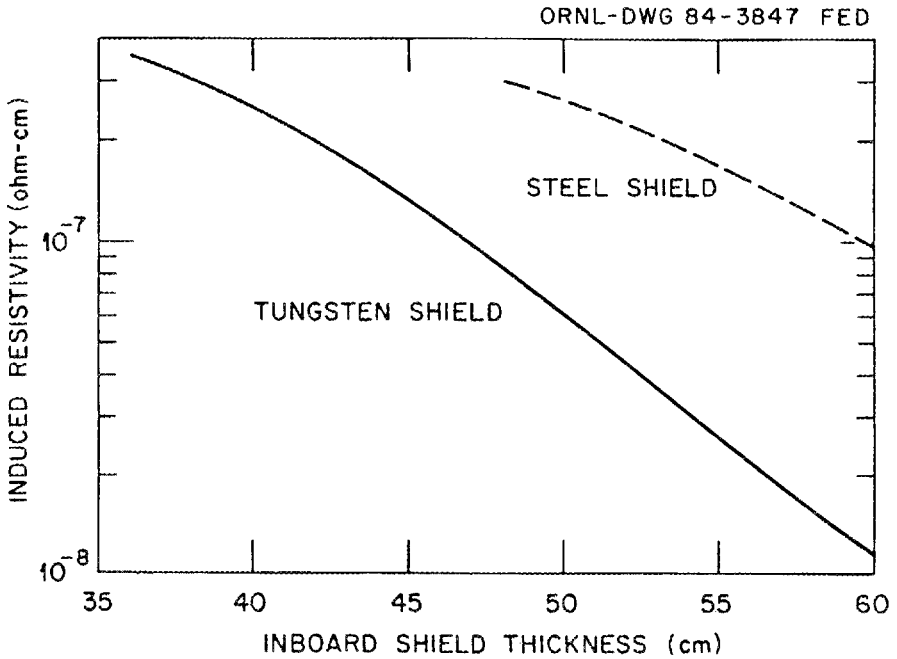

Fig. 15. Maximum copper induced resistivity normalized to 1 MWy/m^2 DT neutron exposure at the first wall as a function of the inboard shield thickness for tungsten and steel shield.

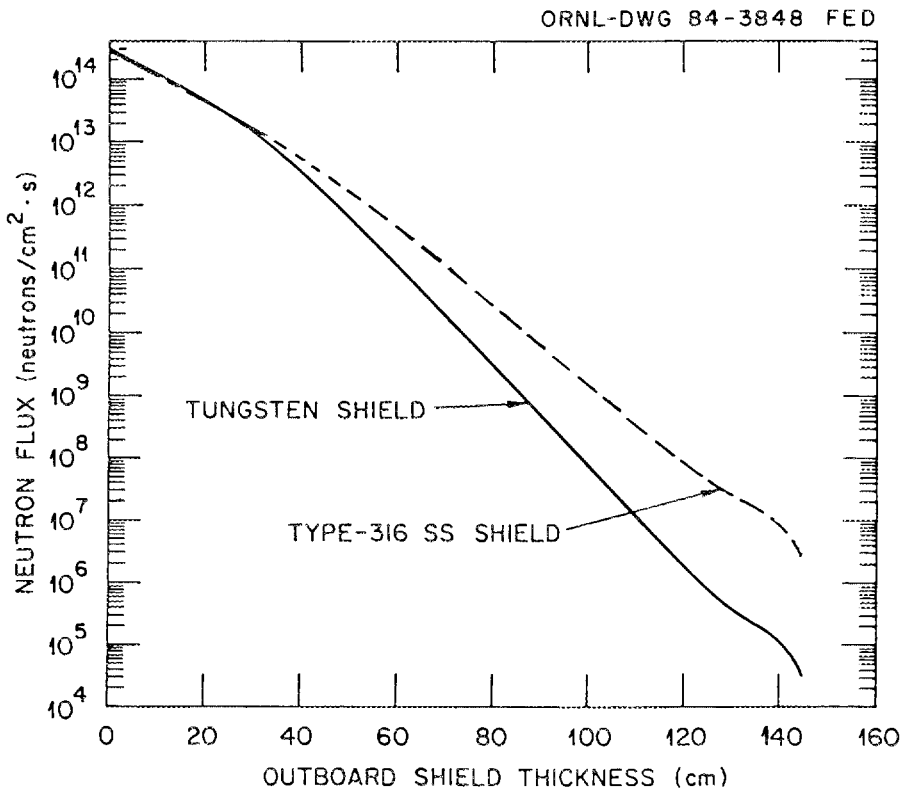

Fig. 16. Neutron flux as a function of the outboard shield thickness normalized to 1 MW/m^2 neutron wall loading at the first wall for tungsten and steel shield.

heating per unit length of the TF coils in the inboard section is shown in Fig. 13. Figure 14 gives the maximum neutron fluence (E > 0.1 and 0.0 MeV) in the NbTi superconductor. The maximum radiation damage in the copper stabilizer in terms of the induced resistivity is shown in Fig. 15. For the outboard shield, Fig. 16 shows the total neutron flux as a function of the shield thickness for both shields, wherever the tungsten shield is not included in the model.

The results from the parametric study were used to generate numerical fitting for the results for each nuclear response as a function of the shield thickness, the D-T neutron wall loading (MW/m^2), and the total operating time (y). The D-T neutron wall load and the D-T neutron exposure in MWy/m^2 are calculated at the first wall. This process was carried out for four different configurations as follows.

1. Steel shield for the whole reactor with 5-cm carbon armor for the inboard first wall.

   - Thermal insulator dose (rads) in the inboard section of the TF coils

     $= \text{neutron exposure } (MWy/m^2) \times 1.428 \times 10^{13} \times \exp[-0.1381 \times t(cm)],$

     where t is the thickness of the inboard shield as shown in Table 8.

   - Electrical insulator dose (rads) in the inboard section of the TF coils

     $= \text{neutron exposure } (MWy/m^2) \times 6.455 \times 10^{12} \times \exp[-0.1383 \times t(cm)].$

   - Maximum neutron flux (n/cm^2-s) at the inboard superconductor of the TF coils with E > 0.1 MeV

     $= \text{neutron wall loading } (MW/m^2) \times 1.684 \times 10^{14} \times \exp[-0.1377 \times t(cm)].$

   - Maximum neutron flux (n/cm^2-s) at the inboard superconductor of the TF coils with E > 0.00 MeV

     $= \text{neutron wall loading } (MW/m^2) \times 3.131 \times 10^{14} \times \exp[-0.1367 \times t(cm)].$

- Maximum neutron fluence (n/m^2) at the inboard superconductor of the TF coils with $E > 0.1$ MeV, MNFG1

  = neutron exposure (MWy/m^2) $\times 5.321 \times 10^{21} \times \exp[-0.1377 \times t(cm)]$.

- Maximum induced resistivity (Ω-cm) in the copper stabilizer of thin board section of the TF coils

  $$= [1.449 + 78.1(MNFG1 \times 10^{-18}) - 7.157(MNFG1 \times 10^{-18})^2 + 0.2852(MNFG1 \times 10^{-18})^3] \times 10^{-9}$$

- Maximum atomic displacement (dPa) in the copper stabilizer of the inboard section of the TF coils

  = neutron exposure (MWy/m^2) $\times 2.693 \times \exp[-0.1389 \times t(cm)]$.

- Maximum nuclear heating rate (W/cm^3) in the board section of the TF dewar

  = neutron wall loading (MW/m^2) $\times 6.499 \times \exp[-0.1365 \times t(cm)]$.

- Maximum nuclear heating rate (W/cm^3) in the inboard TF case

  = neutron wall loading (MW/m^2) $\times 5.539 \times \exp[-0.1367 \times t(cm)]$.

- Total nuclear heating rate per unit length (W/cm) in the inboard section of the TF coils, winding pack and case

  = neutron wall loading (MW/m^2) $\times 1.189 \times 10^5 \times \exp[-0.1370 \times t(cm)]$.

- Nuclear heating in the inboard shield (W/cm^3) with 5-cm carbon armor between the D-T neutron source and the shield surface

  = neutron wall loading (MW/m^2) $\times 9.770 \times \exp[-0.1262 \times t(cm)]$.

- Nuclear heating in the inboard carbon armor (W/cm^3)

  = neutron wall loading (MW/m^2) $\times 6.735 \times \exp[-0.1372 \times C(cm)]$,

  where C is the carbon armor thickness and varies from 0 to 5 cm.

- Nuclear heating in the outboard first wall

  = neutron wall loading (MW/m^2) × 15.00 × exp[-0.1362 × F(cm)],

  where F is the first-wall thickness and varies from 0 to 2 cm.

- Nuclear heating in the outboard shield with 2-cm first wall between the D-T neutron source and the shield surface

  = neutron wall loading (MW/m^2) × 14.74 × exp[-0.1474 × t(cm)].

- Total neutron flux in the shield, $\phi(t)$, n/cm^2-s

  = neutron wall loading (MW/m^2) × ϕ_o × exp[$-\lambda(cm^{-1})$ × t(cm)],

  where ϕ_o is the total neutron flux at the surface of the zone under consideration, $\phi(t)$ is the total neutron flux at t centimeter from the surface of the zone under consideration, and $1/\tau$ is the mean free path (cm) of the material in the zone under consideration.

Zone	ϕ_o	τ
FAST NEUTRON FLUX E > 0.1 MeV		
Inboard shield with 5-cm carbon armor	1.27×10^{14}	0.1153
Carbon armor (0 to 5 cm)	2.26×10^{14}	0.0750
Outboard first wall (0 to 2 cm)	2.58×10^{14}	0.0973
Outboard shield with 2-cm first wall	2.12×10^{14}	0.1056
TOTAL NEUTRON FLUX E > 0.0 MeV		
Inboard shield with 5-cm carbon armor	3.36×10^{14}	0.1129
Carbon armor (0 to 5 cm)	1.91×10^{14}	0.0743
Outboard first wall (0 to 2 cm)	3.72×10^{14}	0.1102
Outboard shield with 2-cm first wall	2.98×10^{14}	0.1016

2. Tungsten shield for the inboard section with 5-cm carbon armor for the inboard first wall and steel shield for the outboard section.

- Thermal insulator dose (rads) in the inboard section of the TF coils

  = neutron exposure (MWy/m^2) × $1.914 \times 10^{13} \times \exp[-0.1816 \times t(\text{cm})]$,

  where t is the thickness of the inboard shield as shown in Table 8.

- Electrical insulator dose (rads) in the inboard section of the TF coils

  = neutron exposure (MWy/m^2) × $8.431 \times 10^{12} \times \exp[-0.1822 \times t(\text{cm})]$.

- Maximum neutron flux (n/cm^2-s) at the inboard superconductor of the TF coils with E > 0.1 MeV

  = neutron wall loading (MW/m^2) × $2.285 \times 10^{14} \times \exp[-0.1821 \times t(\text{cm})]$.

- Maximum neutron flux (n/cm^2-s) at the inboard superconductor of the TF coils with E > 0.0 MeV

  = neutron wall loading (MW/m^2) × $4.813 \times 10^{14} \times \exp[-0.1805 \times t(\text{cm})]$.

- Maximum neutron fluence (n/m^2) at the inboard superconductor of the TF coils with E > 0.1 MeV, NMFG1

  = neutron exposure (MWy/m^2) × $7.221 \times 10^{21} \times \exp[-0.1821 \times t(\text{cm})]$.

- Maximum induced resistivity (Ω-cm) in the copper stabilizer of the inboard section of the TF coils

  $$= [1.449 + 78.1(\text{MNFG1} \times 10^{-18}) - 7.157(\text{MNFG1} \times 10^{-18})^2 + 0.2852(\text{MNFG1} \times 10^{-18})^3] \times 10^{-9} \quad .$$

- Maximum atomic displacement (dPa) in the copper stabilizer of the inboard section of the TF coils

  = neutron exposure (MWy/m^2) × $3.342 \times \exp[-0.1830 \times t(\text{cm})]$.

- Maximum nuclear heating rate (W/cm^3) in the inboard section of the TF dewar

  = neutron wall loading (MW/m^2) × 9.527 × exp[-0.1786 × t(cm)].

- Maximum nuclear heating rate (W/cm^3) in the inboard TF case

  = neutron wall loading (MW/m^2) × 8.490 × exp[-0.1787 × t(cm)].

- Total nuclear heating per unit length (W/cm) in the inboard section of the TF coils, winding pack and case

  = neutron wall loading (MW/m^2) × 1.793×10^5 × exp[-0.1800 × t(cm)].

- Nuclear heating in the inboard shield (W/cm^3) with 5-cm carbon armor between the D-T neutron source and the shield surface

  = neutron wall loading (MW/m^2) × 18.82 × exp[-0.1620 × t(cm)].

- Nuclear heating in the inboard carbon armor (W/cm^3)

  = neutron wall loading (MW/m^2) × 7.029 × exp[-0.1072 × C(cm)],

  where C is the carbon armor thickness and varies from 0 to 5 cm.

- Nuclear heating in the outboard first wall

  = neutron wall loading (MW/m^2) × 15.84 × exp[-0.1261 × F(cm)],

  where F is the first-wall thickness and varies from 0 to 2 cm.

- Nuclear heating in the outboard shield with 2-cm first wall between the D-T neutron source and the shield surface

  = neutron wall loading (MW/m^2) × 14.74 × exp[-0.1474 × t(cm)].

- Total neutron flux in the shield, $\phi(t)$, n/cm^2-s

  = neutron wall loading (MW/m^2) × ϕ_o × exp[$-\lambda(cm^{-1})$ × t(cm)];

  ϕ_o, $\phi(t)$, and λ are defined in Part 1.

Zone	ϕ_o	τ
FAST NEUTRON FLUX E > 0.1 MeV		
Inboard shield with 5-cm carbon armor	1.943 + 14	0.1547
Carbon armor (0 to 5 cm)	2.584 + 14	0.05697
Outboard first wall (0 to 2 cm)	2.899 + 14	0.05326
Outboard shield with 2-cm first wall	2.557 + 14	0.1056
TOTAL NEUTRON FLUX E > 0.0 MeV		
Inboard shield with 5-cm carbon armor	3.132 + 14	0.1519
Carbon armor (0 to 5 cm)	4.323 + 14	0.06450
Outboard first wall (0 to 2 cm)	4.657 + 14	0.08919
Outboard shield with 2-cm first wall	3.896 + 14	0.1016

3. Steel shield for the whole reactor with 2-cm steel armor for the inboard first wall. The nuclear responses in the TF coils for the carbon armor given in Part 1 can be used with (t + 2) instead of t for the shield thickness.

   - Nuclear heating in the inboard shield (W/cm^3) with 2-cm steel armor between the D-T neutron source and the shield surface

     = neutron wall loading (MW/m^2) × 11.96 × exp[-0.1350 × t(cm)].

   - Nuclear heating in the inboard steel armor (W/cm^3)

     = neutron wall loading (MW/m^2) × 12.27 × exp[-0.1749 × S(cm)],

     where S is the steel armor thickness and varies from 0 to 2 cm.

   - Nuclear heating in the outboard first wall

     = neutron wall loading (MW/m^2) × 15.17 × exp[-0.1380 × F(cm)],

     where F is the first-wall thickness and varies from 0 to 2 cm.

   - Nuclear heating in the outboard shield with 2-cm first wall between the D-T neutron source and the shield surface

= neutron wall loading (MW/m^2) × 14.85 × exp[-0.1367 × t(cm)].

- Total neutron flux in the shield, $\phi(t)$, n/cm^2-s

  = neutron wall loading (MW/m^2) × ϕ_o × exp[$-\lambda(cm^{-1})$ × t(cm)];

  ϕ_o, $\phi(t)$, and λ are defined in Part 1.

Zone	ϕ_o	τ
FAST NEUTRON FLUX E > 0.1 MeV		
Inboard shield with 2-cm steel armor	1.59×10^{14}	0.0965
Steel armor (0 to 2 cm)	2.10×10^{14}	0.1378
Outboard first wall (0 to 2 cm)	2.50×10^{14}	0.0953
Outboard shield with 2-cm first wall	2.07×10^{14}	0.1054
TOTAL NEUTRON FLUX E > 0.0 MeV		
Inboard shield with 2-cm steel armor	2.36×10^{14}	0.0971
Steel armor (0 to 2 cm)	3.20×10^{14}	0.1520
Outboard first wall (0 to 2 cm)	3.30×10^{14}	0.1148
Outboard shield with 2-cm first wall	2.62×10^{14}	0.1009

4. Tungsten shield for the inboard section with 2-cm steel armor for the inboard first wall and steel shield for the outboard section. The nuclear responses in the TF coils for the carbon armor given in Part 2 can be used with (t + 2.8) instead of t for the shield thickness.

   - Nuclear heating in the inboard shield (W/cm^3) with 2-cm steel armor between the D-T neutron source and the shield surface

     = neutron wall loading (MW/m^2) × 23.39 × exp[-0.1646 × t(cm)].

   - Neutron heating in the inboard steel armor (W/cm^3)

     = neutron wall loading (MW/m^2) × 13.29 × exp[-0.1565 × S(cm)],

     where S is the steel armor thickness and varies from 0 to 2 cm.

- Neutron heating in the outboard first wall

  = neutron wall loading (MW/m^2) × 16.17 × exp[-0.1310 × F(cm)],

  where F is the first-wall thickness and varies from 0 to 2 cm.

- Nuclear heating in the outboard shield with 2-cm first wall between the D-T neutron source and the shield surface

  = neutron wall loading (MW/m^2) × 14.85 × exp[-0.1367 × t(cm)].

- Total neutron flux in the shield, $\phi(t)$, n/cm^2-s

  = neutron wall loading (MW/m^2) × ϕ_o × exp[$-\lambda(cm^{-1})$ × t(cm)];

  ϕ_o, $\phi(t)$, and λ are defined in Part 1.

Zone	ϕ_o	τ
FAST NEUTRON FLUX E > 0.1 MeV		
Inboard shield with 2-cm steel armor	1.929 + 14	0.1591
Steel armor (0 to 2 cm)	2.378 + 14	0.1067
Outboard first wall (0 to 2 cm)	2.7309 + 14	0.0486
Outboard shield with 2-cm first wall	2.9777 + 14	0.1054
TOTAL NEUTRON FLUX E > 0.0 MeV		
Inboard shield with 2-cm steel armor	3.081 + 14	0.1513
Steel armor (0 to 2 cm)	4.076 + 14	0.1396
Outboard first wall (0 to 2 cm)	4.470 + 14	0.0925
Outboard shield with 2-cm first wall	3.715 + 14	0.1009

REFERENCES

1. C. A. Flanagan et al., *Fusion Engineering Device Design Description*, ORNL/TM-7948, Oak Ridge Natl. Lab., 1981.

2. Y. Gohar and M. A. Abdou, "U.S. INTOR Radiation Shield Design," in *Proc. of the 6th Int. Conf. on Radiation Shielding*, Tokyo, May 16-20, 1983.

3. W. W. Engle, Jr., *A User's Manual for ANISN, A One-Dimensional Discrete Ordinates Code with Anisotropic Scattering*, ORGDP-K-1963, Oak Ridge Gaseous Diffusion Plant, 1967.

4. R. W. Roussin et al., *The CTR Processed Multigroup Cross Section Library for Neutronics Studies*, ORNL/RCSIC-37, Oak Ridge Natl. Lab., July 1980.

5. Y. Gohar and M. A. Abdou, *MACKLIB-IV: A Library of Nuclear Response Functions Generated with MACK-IV Computer Program from ENDF/B-IV*, ANL/FPP/TM-106, Argonne National Laboratory, 1979.

6. J. Jung, *Theory and Use of Radioactivity Code RACC*, ANL/FPP/TM-122, Argonne National Laboratory, 1979.

7. Y. Gohar, "FED/INTOR Activation and Biological Dose," *Trans. Am. Nucl. Soc.* 43, 293-94 (1982).

3. TOROIDAL FIELD COIL MODULE

The TF module develops the design of the TF coils and bucking cylinder. The TF winding cross-sectional area is determined based on a required field on axis at a given plasma major radius consistent with an input value of current density over the winding pack and an allowable stress level in the coil. An iteration loop is available that will adjust the field on axis to maintain a specified maximum field at the winding. The TF outer leg is sized based on the larger of (1) a minimum radius to accomodate the torus or (2) a radius to limit the value of magnetic field ripple at the plasma edge to an acceptable value. The TF coil shapes may be a constant tension shape or an arbitrary shape. An estimate is made of the stored magnetic energy and the cycle average ac losses in the coil case due to the pulsing poloidal field (PF) coils. The TF coil may be superconducting or resistive. Capability to provide enhancement of the field on axis is available by calling a copper insert subroutine. A bucking cylinder is sized to restrain the TF coil centering force.

MAJOR ASSUMPTIONS AND CONSTRAINTS

Once the coil shape is known, the coil ampere-turns and field distribution inside the magnet bore are determined by using Ampere's law.

MODULE INPUT

Key user-input items to the TF module include: plasma major radius, field on the plasma axis, maximum field at the TF coil winding, winding current density, allowable stress, number of TF coils, and unit cost values. Tables 9 and 10 list user input for the TF module.

Table 9. User Input — Toroidal field coil (and copper insert) input data

ACASTR	allowable hoop stress	psi
ACSTN	allowable strain	(no longer used)
DAGI	TF inside gap between shield and dewar	m
DAGO	TF outside gap between shield and dewar	m
DCASE	case density	kg/m^3
DCOND	conductor density	kg/m^3
DCS	fraction of gap between circle and trapezoid not filled with conductor or winding	
DDW	dewar thickness (including dewar, nitrogen shield and vacuum space)	m
EBUCK	bucking cylinder module of elasticity	psi
ECASE	TF case module of elasticity	psi (no longer used)
ECOND	conductor module of elasticity	psi (no longer used)
FCFBUC	fraction of centering force assumed to be supported by bucking cylinder	
FWEDGE	TF coil cross section (if 1, trapezoidal; if 0, rectangular; if >0, <1, in between)	
HMAX	maximum height of TF coils (used with SHAPTF = 2 only)	m
JCDOUT	outer TF leg current density (if 0, JCDOUT = JCONTF)	A/cm^2
JCONTF	conductor current density	A/cm^2
ITFKA	TF coil operating current	kA
NUBUCK	Poisson's ratio for bucking cylinder	
OACDTF	overall current density (used with SHAPTF = 2 only)	A/cm^2
RHMAX	the radius to the maximum TF coil height (used with SHAPTF = 2 only)	m
RHOTF	coil resistivity (if superconducting, RHOTF = 0)	Ω-m
RMAX	TF coil maximum radius (used with SHAPTF = 2 only)	m
SHAPDW	dewar shape option (1 = ORNL dewar system)	
SHAPTF	TF coil shape option (1 = constant tension D-shaped, 2 = arbitrary, 3 = modified constant tension)	
TFNO	number of TF coils	

Table 9 (continued)

TFTMP	TF coil operating temperature	K
THKCAS	assumed TF case thickness	m
TOLTOR	the tolerance between a torus sector and the TF window for straight-line sector removal	m (no longer used)
UCBC	unit cost of bucking cylinder	dollars/kg
UCCASE	unit cost of TF case	dollars/kg
UCCOND	unit cost of TF conductor	dollars/kg
VFTF	conductor void fraction	
XTP	TF coil inboard leg radius (used with SHAPTF = 2 only)	m
YSBUCK	bucking cylinder yield strength	psi
YTP	height of inner TF leg staight section (used with SHAPTF = 2 only)	m

Table 10. TF Input flowing in from other modules of the systems code

RSHLDI	inboard shield inner radius	m
BT	field on axis	T
RO	major radius	m
RSLDO	outboard shield outer radius	m
IGLOO	shield shape option	
DSHO	outboard shield thickness	m
DSHOM	minimum outboard shield thickness to protect TF coil	m
RIPPLE	maximum ripple	%
BMAXTF	maximum TF ripple field at coil	T
BV	plasma poloidal field	T
TOHS	OH solenoid swing time	s
TQNCH	plasma quench time	s

GOVERNING EQUATIONS

Refer to Figs. 17 and 18 for geometric relationship.

CALCULATE MAXIMUM TF FIELD AT THE WINDING

Radius from device center to high-field side of inner leg (m):

$$RC = RSHLDI - DAGI - DDW ,$$

where

RSHLDI is the radius from device center to the inboard shield (m);
DAGI is the gap between inboard shield and TF coil (m);
DDW is the thickness of the dewar.

$$DCS = RC(1 - \cos \pi/n_{TF}) \qquad (m) .$$

Radial distance between circle with radius RC and trapezoid winding. If DCS (an input item) is entered as zero, this space is utilized as part of the winding (i.e., trapezoid with an arc). If DCS is entered as 1, a trapezoid area is used and this space is empty.

Radius to conductor edge from device center.

$$R2 = RC - DCS - THKCAS \qquad (m) ,$$

where

THKCAS is an input estimate of the TF case thickness in meters (only used in calculating max field).

$$TFMAX = BT \times \frac{R0}{R2} \qquad (T) .$$

If BMAXTF (an input item) is entered as zero, then TFMAX is used as BMAXTF. If BMAXTF is entered as a positive value, then new values of BT are returned to the physics module until TFMAX = BMAXTF.

ORNL-DWG 84-3764 FED

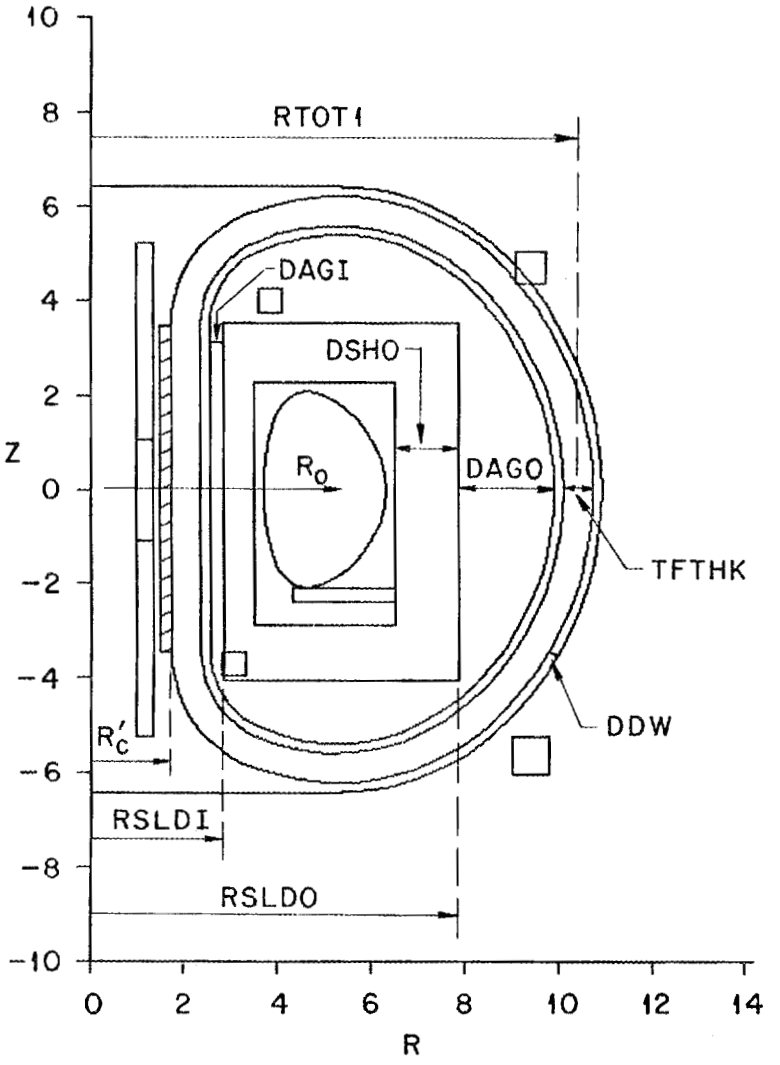

Fig. 17. Tokamak elevation view.

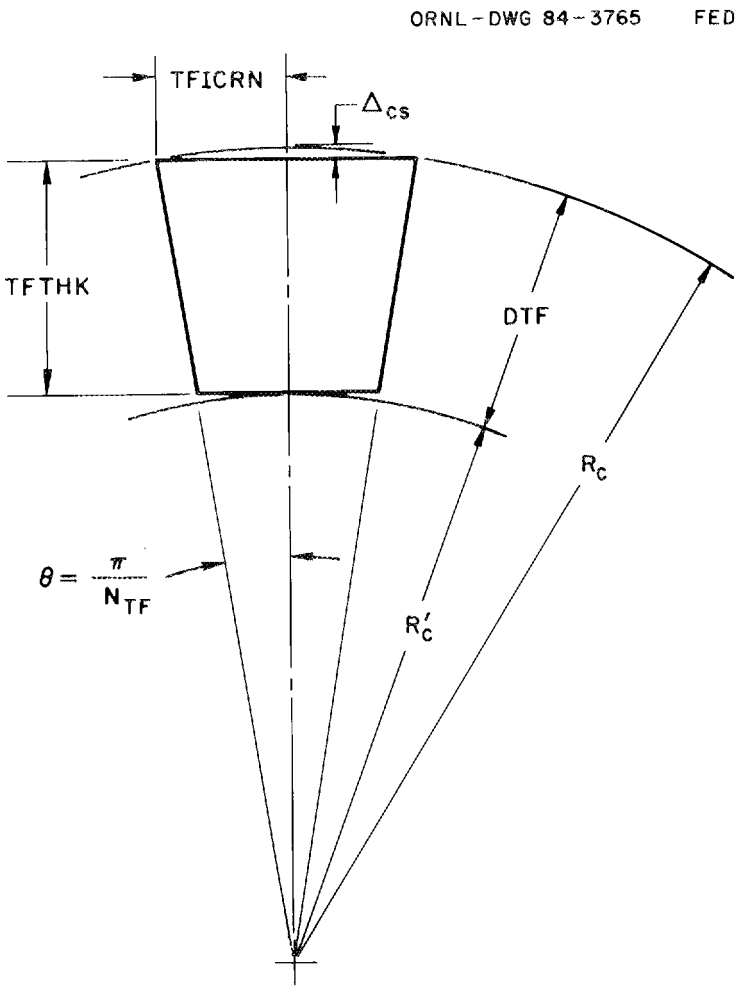

Fig. 18. Midplane cross section of the inner leg of a TF coil.

CALCULATE TF CROSS SECTION

$$NITF = \frac{2\pi \times R0 \times BT}{4\pi \times 10^{-7}}$$

Total TF ampere-turns.

$$ASAC = 0.6 \times \sqrt{\frac{BMAXTF}{10} \times \frac{31.1}{ACASTK}} \times \left(\frac{DCOND}{DCASE}\right) (1 - VFTF)$$

Structure to conductor area ratio,

where

ACASTK is the allowable stress in KSI based on the number of tokamak cycles over life and the initial flaw size (see Fig. 19 for a representative plot of stress vs number of cycles for an initial flaw size of 0.1 in.).

$$TAFT = \frac{(1 + ASAC) \times NITF}{(1 \times 10^4)JCONTF} \qquad (m^2)$$

Total cross-section area,

where

JCONTF is conductor current density in A/cm^2.

CALCULATE INNER RADIUS OF INBOARD LEG

The cross-section shape may be varied from trapezoid (FWEDGE = 1) to rectangular (FWEDGE = 0).

If trapezoid (FWEDGE = 1).

$$RCP = \sqrt{(RC)^2 - \frac{2 \times TAFT}{TFN \times \sin(2\pi/TFN)}} \times \cos(\pi/TFN) \qquad (m) ,$$

where

TFN is the number of TF coils.

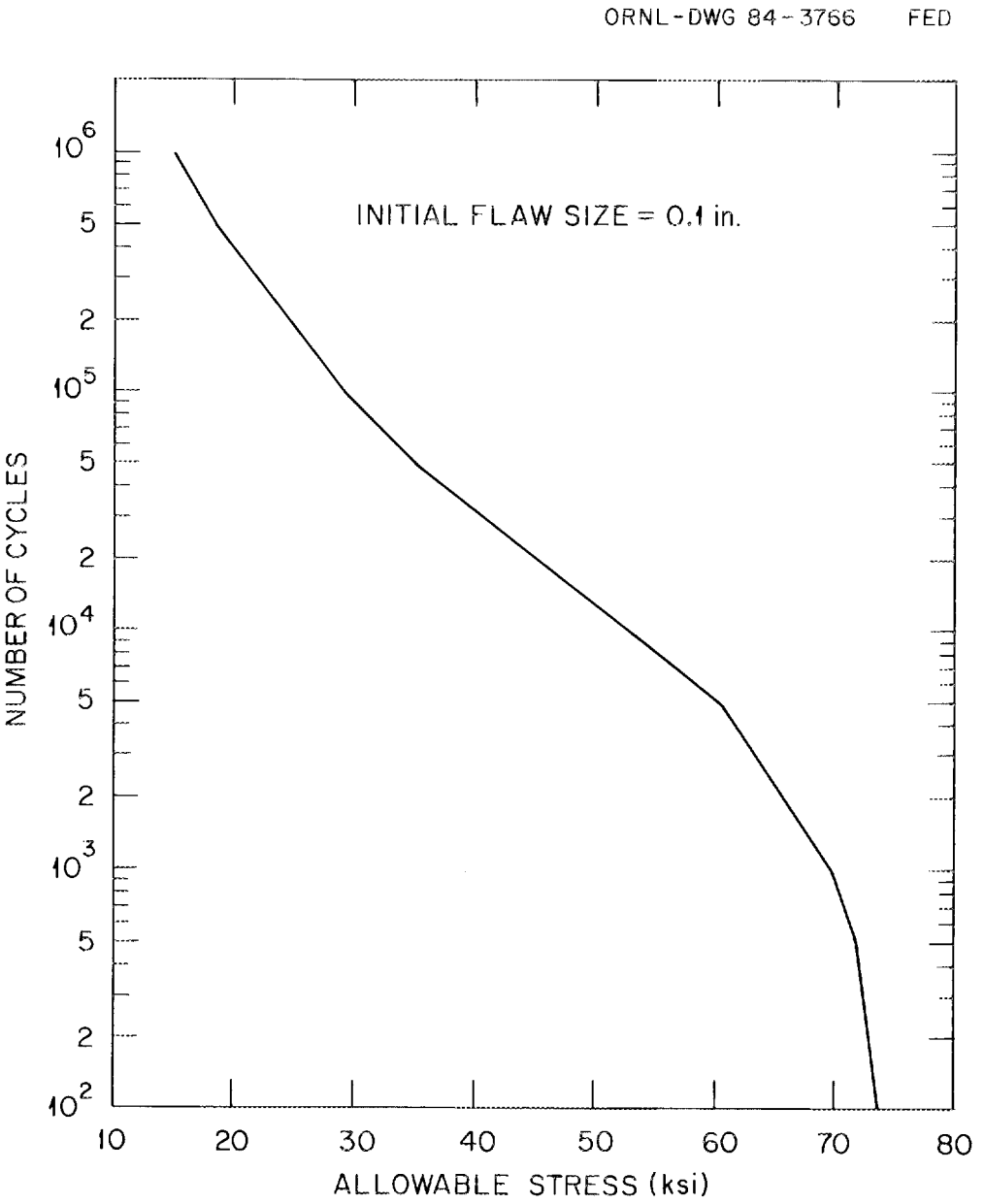

Fig. 19. Stainless steel allowable stress vs number of cycles.

If shape is rectangular or in between trapezoid and rectangular ($0 < FWEDGE < 1$), then

RCP = initial guess .

Width of the wedge section is (Fig. 20):

$$WB = [RC \times \sin(\pi/TFN) - RCP \times \tan(\pi/TFN)] \times (1 - FWEDGE) \quad (m) .$$

Height of the wedge section is

$$WH = WB/\tan(\pi/TFN) \quad (m) .$$

iterate

Area of wedge is

$$AW = WB \times WH/2 .$$

The inner radius of the inboard leg is determined from

$$RCP = \sqrt{RC^2 - \frac{2\,\frac{TATF}{TFN} + \frac{AW}{2}}{\sin(2\pi/TFN)}} \times \cos(\pi/TFN) \quad (m) .$$

We must iterate back to the initial guess on RCP until the initial guess for RCP and the calculated value of RCP are within tolerance. If the radical above is negative, a message is printed that there is insufficient space for the TF coil inner leg, and the execution of the code is terminated.

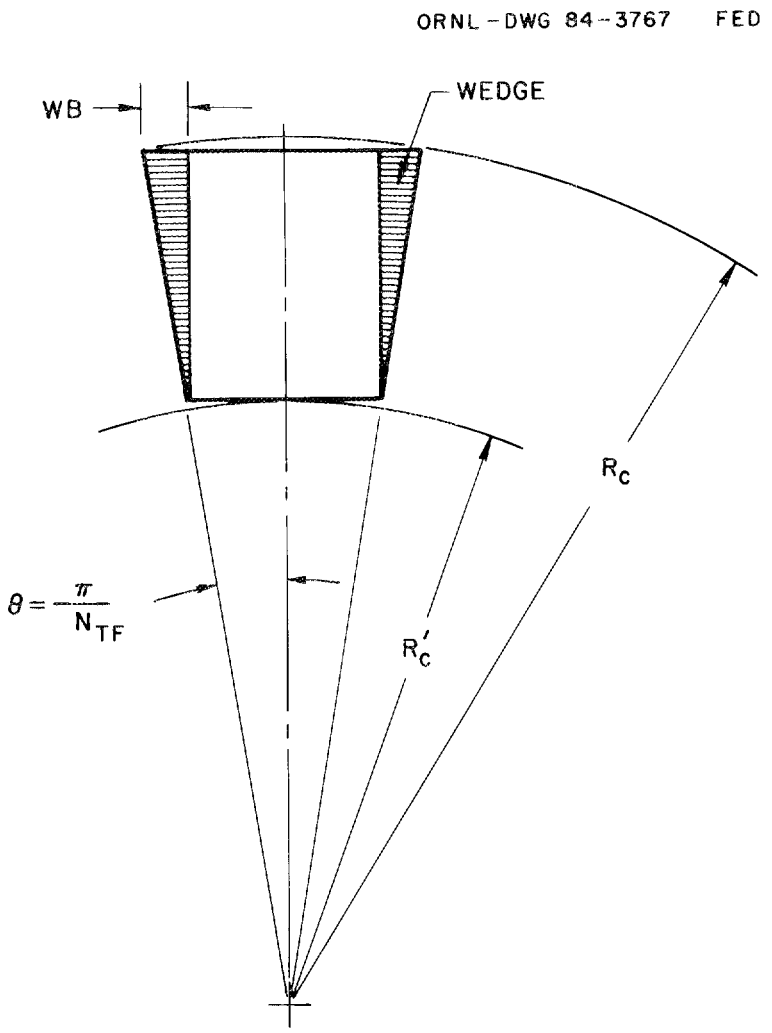

Fig. 20. Sketch showing wedge section of winding removed to form a rectangular cross section.

CALCULATE INBOARD LEG THICKNESS AND WIDTH

Radial build of inboard annulus:

$$DTF = RC - RCP \qquad (m) \ .$$

TF coil thickness:

$$TFTHK = DTF - DCS \qquad (m) \ .$$

Average radius of the inboard leg relative to the device center:

$$RIN = RC - DCS - TFTHK/2 \ .$$

Inboard leg half width (plasma side):

$$TFICRN = RC \times \sin(\pi/TFN) - wb \ .$$

Inboard leg half width (bulking cylinder side):

$$TFOCRN = RCP \times \sin(\pi/TFN) \ .$$

CALCULATE OUTER LEG LOCATION

The minimum TF coil outer leg radius, relative to the device centerline, is that radius required to just accommodate the plasma, shield, and selected gaps. This value is compared to a TF outer leg radius consistent with a minimum value of magnetic field ripple at the plasma edge. The larger value of these two radii is selected as the TF coil outer leg radius. Outer leg location from the device centerline to the midpoint of the outboard leg winding based on radial build:

$$RTOT = RSLDO + DAGO + DDW + TFTHK/2 \qquad (m) \ ,$$

where

RSLDO is the outboard shield radius relative to the device centerline.

If an igloo configuration is selected (controlled by the input variable Igloo = 1), the TF outer leg may be embedded in the outboard shield, in which case the value of RTOT is modified to just accommodate a minimum input outboard shield thickness, DSHOM, instead of the entire outboard shield thickness, DSHO.

$$RTOT = RTOT - DSHO + DSHOM \quad (m) \quad (\text{if Igloo} = 1) \ .$$

Outer leg location to the midpoint of the winding based on ripple:

$$ROTRP = X1/(X2)^{1/TFNO} \quad (m) \ ,$$

where

$$X1 = 1.023 \ (R0 + A) \ ,$$

$$X2 = Ripple/[1.03333 + 0.21048(TFNO) - 0.044525(TFNO)^2 + 0.0035(TFNO)^3 - 0.000129(TFNO)^4 + 1.85 \times 10^{-6}TFNO^5] \ .$$

The larger value, RTOT or RTOP, is selected at the TF coil outer leg radius designated as RTOT1.

Clear horizontal bore:

$$BOREH = RTOT1 - RIN - TFTHK - 2 \times DDW \quad (m) \ .$$

TF COIL SHAPE

Three TF coil geometry options are available in the TF module of the FED systems code. Among these three, the first option is the constant-tension, D-shaped TF coil geometry. The second option is for the arbitrarily shaped TF coil geometry, which can be simulated by three curves

and one straight line passing through three predetermined point locations. The last option describes the non-constant-tension TF coil geometry with the first center of curvature located at the machine center.

In the first option, specified by SHAPTF = 1, the basic parameters necessary for determining the exact shape of a constant-tension, D-shaped magnet are R_1, R_2, H_{R1}, H_{max}, and R_{Hmax} (shown in Fig. 21). R_1 and R_2 are the same as the previously defined variables RIN and RTOT1. The ratios R_1/R_2, H_{R1}/R_2, H_{max}/R_2, and R_{Hmax}/R_2 for different values of the independent variable ρ_2/R_2 were curve-fitted by Moses and Young.[1] Each ratio was presented by a fourth-order polynomial equation of the independent variable ρ_2/R_2 as:

$$x/R_2 = \sum_{j=0}^{4} A_j (\rho_2/R_2)^j \ , \tag{1}$$

where

x is one of the above four ratios,

A_j is a fourth-order polynomial of the form

$$A_j = \sum_{j=0}^{4} A_i N^i \ , \tag{2}$$

where

N is the number of TF coils,

A_i is a fourth-order polynomial relating one of the four basic parameters to the number of TF coils.

The basic parameters are solved through the application of the nonlinear simultaneous equations solver HYBRID1. For the arbitrarily shaped TF coil geometry option, SHAPTF = 2.0, the TF coils are approximated by three circular and one straight section (Fig. 22). The first section of the TF coil is enclosed by $(H_1,0)$, $(R_{max},0)$, and (x',y').

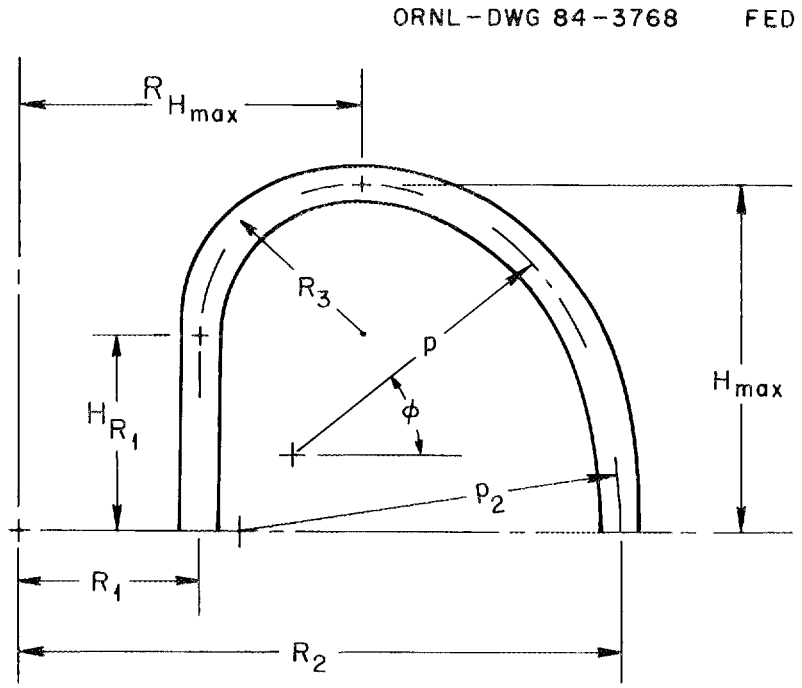

Fig. 21. Schematic of the constant-tension, D-shaped TF coil geometry.

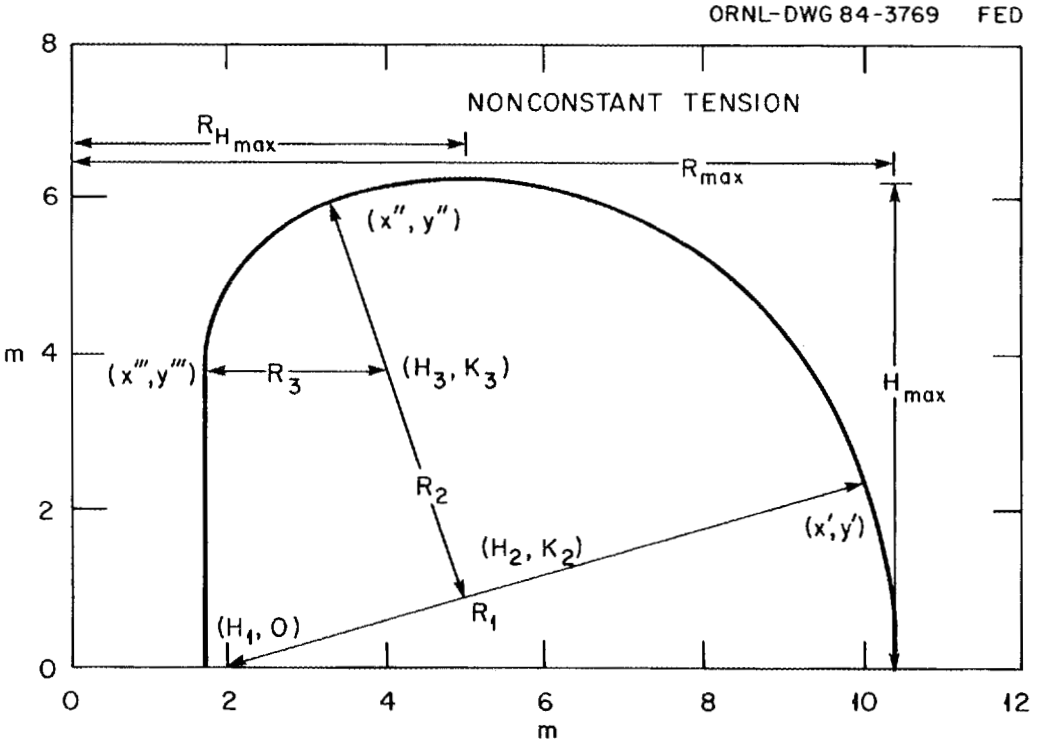

Fig. 22. A TF coil with specified (x''', y'''), (R_{Mmax}, H_{max}), and $(R_{max}, 0)$ (non-constant tension).

The end points of the second section are (x', y'), (x'', y''), and (H_2, K_2), while the third circular section is identified by (x'', y''), (x''', y'''), and (H_3, K_3). Finally, the straight section includes points $(x''', 0)$ and (x''', y'''). Caution should be exercised in using this option in that the inner and outer TF leg radii are input by the user, and no consistency check is made for geometric interference with the torus or for ripple criteria violation. It is suggested that in using this option to specify an arbitrary shape that the constant-tension option first be run to obtain self-consistent location of the inner and outer TF leg radii for use in the arbitrary shape run for a fixed plasma/torus configuration.

The three predetermined points are (x''', y'''), $(R_{max}, 0)$, and (R_{Hmax}, H_{max}). With these known locations, the following characteristics of an arbitrarily shaped TF coil can be written:

$$R_1 = R_{max} - H_1 ,$$

$$K_3 = y''' ,$$

$$H_2 = R_{max} ,$$

$$H_3 = R_3 + x''' ,$$

$$H_{max} = K_2 + R_2 ,$$

$$R_1 = R_2 + \sqrt{(R_{Hmax} - H_1)^2 + K_2^2} ,$$

$$R_2 = R_3 + \sqrt{(H_3 - H_2)^2 + (y''' - K_2)^2} ,$$

$$R_1 = \sqrt{(x' - H_1)^2 + (y')^2} ,$$

$$R_2 = \sqrt{(x'' - H_2)^2 + (y'' - K_2)^2} ,$$

$$R_3 = \sqrt{(x'' - H_3)^2 + (y'' - K_3)^2} \ ,$$

and

$$(x' - H_1) = y'/K_2(H_2 - H_1) \ .$$

Given the location of H_1, the preceding eleven equations are solved for the eleven unknowns, namely, R_1, R_2, R_3, H_2, H_3, K_2, K_3, x', y', x'' and y'' through the application of subroutines FCN, NLINEAR, and HYBRID1.

The last option, SHAPTF = 3.0, differs from the first option, SHAPTF = 1.0, in the assumption of $\rho_2 = R_2$ of Fig. 15, or equivalently, the first center of radius is located at the machine center ($x = 0$, $y = 0$).

STORED ENERGY

The subroutine ENERGY calculates the stored magnetic energy in each TF coil. In order to calculate the stored energy, it is necessary to know the flux, ϕ, linking the TF coils, which in this subroutine is calculated by numerical integration.

For calculating the integrated flux, the TF coil is divided into ten vertical sections, as shown schematically in Fig. 23. The field B_n at radius r_n is calculated from

$$B_n = \frac{4\pi \times 10^{-7} \times \mathrm{NITF}}{2\pi \times r_n} \qquad (\mathrm{T}) \ .$$

The field variation with height is ignored.
The area of each vertical strip is

$$\Delta A = 2(r_{n+1} - r_n)(\mathrm{HT}) \qquad (\mathrm{m}^2) \ ,$$

where

HT is the height from the midplane of each strip that is computed in subroutine BAH.

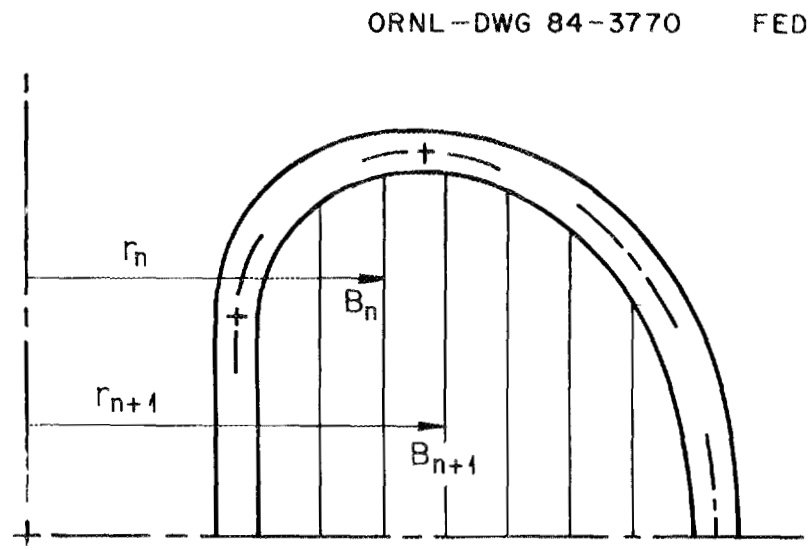

Fig. 23. TF coil schematic showing grid for numerically determining the magnetic stored energy. Grid is composed of ten equal segments.

Compute flux linkage:

$$\phi = \sum_{n=1}^{10} B_n \times \Delta A \qquad \text{(Wb)} \ .$$

Compute stored energy per coil:

$$E = \frac{1}{2} \phi \left(\frac{NITF}{TFN}\right) \qquad \text{(J)} \ .$$

CENTERING FORCE

Centering force per TF coil (Fig. 15):

$$CFORCE = (HMAX + HR1 - 2 \times R3) \frac{BMAXTF \times NITF}{2 \times TFN \times 10^6} \qquad \text{(MN)} \ .$$

BUCKING CYLINDER

The outside surface of the bucking cylinder cross section is a regular polygon with the number of sides equal to NTF (the number of TF coils). The inside surface is a circle. With the outside surface considered specified, subroutine BUCK2 calculates the inside radius RIBC so as to satisfy structural design criteria. These criteria consider gross ductile failure and elastic ring buckling as the potential failure modes.

Subroutine BUCK2 models the bucking cylinder as a hollow right circular cylinder. The outside radius ROBC is one-half the distance across flats and is the radius of the circle inscribed in the regular polygon. The height HBC of the cylinder is taken as the height of the straight section of the TF coil, or in the case of a curved inside leg, as the height of the radially innermost arc defining the TF coil mid-surface.

The cylinder is assumed to be loaded by a uniform inward pressure SIBOBC given by

$$SIGOBC = NTF \times CBC/(2\pi \times ROBC \times HBC) \quad .$$

CBC is FCFBUC times the net centering force on each TF coil. FCFBUC is a dimensionless multiplier supplied as input data; it is usually taken as 1.0, although a value less than 1.0 would be used if it were desired to design the bucking post to react less than the full net centering load (i.e., to depend upon wedging of the TF coils).

The resulting compressive hoop stress in the bucking cylinder assumes its maximum value at the inside surface of the cylinder in accordance with the classical Lame´ thick cylinder solution. The inside radius is calculated so that this maximum hoop stress is equal to a design allowable SIGCSS:

$$RIBC = ROBC \sqrt{1 - 2 \times SIGOBC/SIGCSS} \quad .$$

SIGCSS is computed as YSS/SMCSS, where SMCSS is presently fixed at 1.0 and YSS is supplied as input data through the variable YSBUCK. Although YSS is labeled as the material yield stress on a COMMENT card in the program listing, it is recommended that YSS be chosen as the minimum of two-thirds the yield stress of the cylinder metal or one-third the ultimate compressive strength of the insulating material (if dielectric breaks are used).

Having established an initial cylinder thickness DRO - ROBC - RIBC, subroutine BUCK2 then calculates the critical elastic buckling pressure SIGBUK:

$$SIGBUK = \frac{1}{4} ESS \left(\frac{DR}{RAV} \right)^3 \quad ,$$

where ESS (also known as EBUCK in the input parameters) is the Young's modulus of the cylinder material, DR = ROBC - RIBC is the cylinder thickness, and RAV = (ROBC + RIBC)/2 is the mean radius. The above expression applies

to an open-ended cylinder. The program also contains an expression for the critical elastic buckling pressure for a cylinder with rigid end caps, but presently this expression is not used for sizing the bucking cylinder.

The program requires the elastic buckling pressure SIGBUK to be at least SMBUCK times as great as the applied pressure SIGOBC; SMBUCK is presently fixed at 5. If SIBUCK > SMBUCK × SIGOBC, the cylinder thickness remains equal to DRO. If SIGBUCK < SMBUCK × SIGOBC, the inside radius RIBC is decreased in steps of 0.05 DRO and SIGBUK is recalculated for the current values of DR and RAV until SIGBUK > SMBUCK × SIGOBC.

The systems code prints a message to indicate whether the final inside radius is based on the ductile failure or the buckling criterion.

Weight of bucking cylinder:

$$WTBC = \pi(ROBC^2 - RIBC^2) \times 2 \times TFHMAX \times 7800 \quad .$$

Cost of bucking cylinder:

$$CBCMD = WTBC \times UCBC/10^6 \qquad (\$million) \ ,$$

where

UCBC is the unit cost of the bucking cylinder in $1/kg.

WEIGHT AND COST CALCULATION

The weight of the TF structure and conductor is calculated based on the cross-sectional areas of each and a mean circumference of the coil.

Conductor area per coil:

$$ACOND = \frac{TATF}{(1 + ASAC)(TFN)} \qquad (m^2) \ .$$

Conductor weight for a single TF coil:

$$\text{WHTCON} = \text{TFLENG} \times \text{ACOND} \times (1 - \text{VFTF}) \times \text{DCOND} \qquad (\text{kG}) \ ,$$

where

TFLENG is the mean circumference of a TF coil calculated in the SHAPE section of this module.

Area of a TF coil case (structure):

$$\text{ACASE} = \frac{\text{TAFT}}{\text{TFN}} - \text{ACOND} \qquad (\text{m}^2) \ .$$

Weight of a TF coil case:

$$\text{WHTCAS} = \text{TFLENG} \times \text{ACASE} \times \text{DCASE} \qquad (\text{kG}) \ .$$

If a copper TF coil is chosen by specifying a finite resistivity (RHOTF > 0), different current densities in the conductor are allowed in the inner and outer legs of the coils for the purpose of estimating coil mass, resistive losses, and coil costs. However, the geometric output, including the configuration plots, does not show the different coil thicknesses for the outboard leg. The inboard leg thickness is shown in all geometric output. The current density at the outer leg is specified by the variable JCDOTF. If the outer leg current density is zero, the coil current density value JCONTF is used for the whole coil.

Total cost of coil conductor:

$$\text{TCCOND} = \text{WHTCON} \times \text{TFN} \times \text{UCCOND}/10^6 \qquad (\$\text{million}) \ .$$

Total cost of coil structure:

$$TCCASE = WHTCAS \times TFN \times UCCASE/10^6 \qquad (\$million) .$$

The weight of the inner coil support strucutre is based on an algorithm derived from a detailed point design.

Weight of inner coil support structure:

$$WTICSS = [0.6 + .063(TFLENG - 30)] \times WHTCAS \times TFN \qquad (kg) .$$

Cost of inner coil support structure:

$$TCICSS = WTICSS \times UCCASE/10^6 \qquad (\$million) .$$

CRYOSTAT SIZE AND COST (scaled from a point design)

Height of the cryostat is given by:

$$HCRYO = 2 \times HMAX + TFTHK + 7 \qquad (m) ,$$

where

HMAX = one-half coil height,
TFTHK = coil thickness.

Radius of cryostat:

$$RCRYO = RTOT1 + TFTHK/2 + DDW + 1 \qquad (m) .$$

Cost of vacuum vessel is given as:

$$VVC = 6.1 \left(\frac{RCRYO}{11.8}\right)^3 + 2.07 \left(\frac{RCRYO}{11.8}\right)^2 \left(\frac{HCRYO}{20.5}\right) + 3.21 \left(\frac{TFN}{12}\right) \left(\frac{RCRYO}{11.8}\right) \qquad (\$million) .$$

Cost of cold shield is given as:

$$CSC = 5.41 \left(\frac{RCRYO}{11.8}\right)^2 + 1.16 \left(\frac{RCRYO}{11.8}\right) \left(\frac{HCRYO}{20.5}\right) + 1.58 \left(\frac{TFN}{12}\right) \left(\frac{RCRYO}{11.8}\right) \quad (\$million) \ .$$

Total cryostat cost is given by:

$$CRYOC = VVC + CSC \quad (\$million) \ ,$$

$$CRYOC = 0 \text{ if } RHOTF > 0 \text{ (i.e., resistive TF coil).}$$

AC LOSS CALCULATION

The ac loss calculations are made on the basis of the poloidal field (B_V) due to plasma. It is assumed that the same field is experienced by the TF coil cases. The loss calculations are made on the basis of a flat plate being acted upon by a perpendicular field. The losses are scaled from a point design.

Losses during the plasma startup period (T_{ohs}) are given as

$$ACLSU = 60 \times \frac{VOLTF}{273} \times \frac{(B_V/T_{ohs})^2}{0.01562} \quad (kW) \ ,$$

where

B_V is poloidal field (T),
TOHS is ramp time during startup (s),
VOLTF is total volume of the TF coils.

Likewise, losses during the plasma quench phase are

$$ACLSD = 20 \times \frac{VOLTF}{273} \times \frac{(B_V/TQNCH)^2}{0.00562} \ ,$$

where

TQNCH is quench time.

Cycle average ac losses:

$$ACLOS = (ACLSU \times TOHS + ACLSD \times TQNCH)/TCYCLE \qquad (kW) ,$$

where

TCYCLE is the tokamak cycle duration consisting of the summation of startup, burn, shutdown, and charge times.

TF RESISTIVE LOSSES

If RHOTF > 0, then the TF coils are copper and the resistive losses are calculated.

Conductor area per turn inboard leg:

$$ACOPI = \frac{ITFKA \times 10^3}{JCONTF \times 10^4} \times (1 - VFTF) \qquad (m^2) ,$$

where

ITFKA is the coil current per turn in kA.

Conductor area per turn outboard leg:

$$ACOPO = \frac{ITFKA \times 10^3}{JCDOUT \times 10^4} \times (1 - VFTF) \qquad (m^2) .$$

Number of turns in all TF coil:

$$TFTURN = \frac{NITF}{ITFKA \times 10^3} .$$

Resistance of all TF coils:

$$RTF = RHOTF \left[\frac{2 \times HR1 \times TFTURN}{ACOPI} + \frac{(TFLENG - 2 \times HR1) \times TFTURN}{ACOPO} \right] \quad (\Omega) ,$$

where

HR1 is the TF coil inner leg length (straight section of TF coil).

RESISTIVE POWER

$$RTFMW = (ITFKA \times 10^3)^2 \times RTF/10^6 \qquad (MW) \ .$$

COPPER INSERT CALCULATION

Field enhancement by the use of resistive copper coil buried in the bulk shield can be modeled by the subroutine CIF, which is called by the TF module. The input necessary for this subroutine is contained in Table 11.

The copper insert calculations follow closely those developed for TF coils. The magnetic fields due to the copper inserts are calculated in the same manner, and superposition is used to get the total magnetic field from both sets of coils. The key flag to indicate that the copper insert calculation is a possible solution is the current density in the copper insert JCONCI. Whenever this variable is greater than zero, the program is allowed to select the copper inserts to achieve the required magnetic fields.

To perform the copper insert calculations, the maximum magnetic field in the TF coil BMAXTF takes on a slightly different meaning than in the previous versions. Whenever the copper insert current density is greater than zero, the parameter BMAXTF indicates the maximum field that is allowed by the superconducting TF coil. If more field on axis is required than can be achieved by the superconducting coil, the additional field is achieved by adding an appropriate amount of copper insert TF coil. Thus, the option (BMAXTF = 0) which allows determination of the maximum TF field when the field on axis is given, is not allowed when the copper insert option has been selected. The selection of the copper insert option does not necessarily mean that a copper insert will be used. If the field on axis can be achieved by using less than the BMAX field in the superconducting TF coil, only superconducting coils will be selected. The bucking cylinder is sized consistent with the field in the superconducting coils. The copper insert coils in the shield are assumed to be supported independent of the bucking cylinder.

Table 11. Input variables for the copper insert (CI) option

ACASCI	= allowable CI case material strength (psi)
DCASCI	= density of CI case material (kg/m^3)
DCONCI	= density of CI conductor (kg/m^3)
DCSCI	= difference between circular coil and flat-sided coil (m)
DSHIL	= thickness of inside bulk shield 1 (m)
DSHOL	= thickness of outside bulk shield 1 (m)
FWDGCI	= wedge fraction for determining CI coil cross-sectional shape
ICIKA	= current per CI coil turn (kA per turn)
JCDOCI	= current density in the outer CI coil leg (A/cm^2)
JDONCI	= current density in the inner CI coil leg (A/cm^2)
RHOCI	= resistivity of CI (Ω-m)
UCCNCI	= unit cost of CI conductor ($/kg)
UCCSCI	= unit cost of CI case material ($/kg)
VFCI	= void fraction in the CI conductor

The TF subroutine makes the appropriate checks to see if copper insert coils are required. If copper insert coils are required, a flag is set which calls the CI subroutine. The copper insert subroutine then calculates the characteristics of the copper insert magnets and provides the appropriate output. The copper insert input and output are included with the TF coil input and output data, respectively. The inner and outer legs of the copper insert coils are allowed to have different current densities. This option is selected by placing the outer leg current density JDCOCI at some value greater than zero. Other copper insert input parameters correspond to similar input parameters for the TF coil. These input parameters include case and conductor density, conductor current, and unit cost parameters.

The copper insert calculations require the specification of where in the shield sector the copper inserts are to be placed. A sketch of the expected configuration is shown in Fig. 24. The variables DSHO1 and DSHI1 specify the thickness of shield between the copper insert coils and the plasma for the outer leg and inner leg, respectively. If a value is specified for either of these variables, it will be used as the minimum shield thickness in front of the copper insert coils. If zero is specified for either variable, the program places the copper insert coil at the back of the shield sector as far from the plasma as possible. The total shield thickness, including the copper insert, is still maintained as calculated by the shield calculations (DSHO and DSHI from the FWS subroutine). Thus, the assumption is made that the copper has the same shielding effect as the shielding material it replaces. The two shield thicknesses, DSHO1 and DSHI1, can result in specifying unrealistic configurations where the copper insert coil extends outside the shield and into the superconducting TF coils. The user should check his results to ensure that the desired configuration is attained. Table 12 shows a TF module output sample.

REFERENCE

1. R. W. Moses and W. C. Young, Jr., "Analytic Expressions for Magnetic Forces on Sectored Toroidal Coils," p. 917 in *Proc. 6th Symp. Engineering Problems of Fusion Research*, 1975.

ORNL-DWG 84-3888 FED

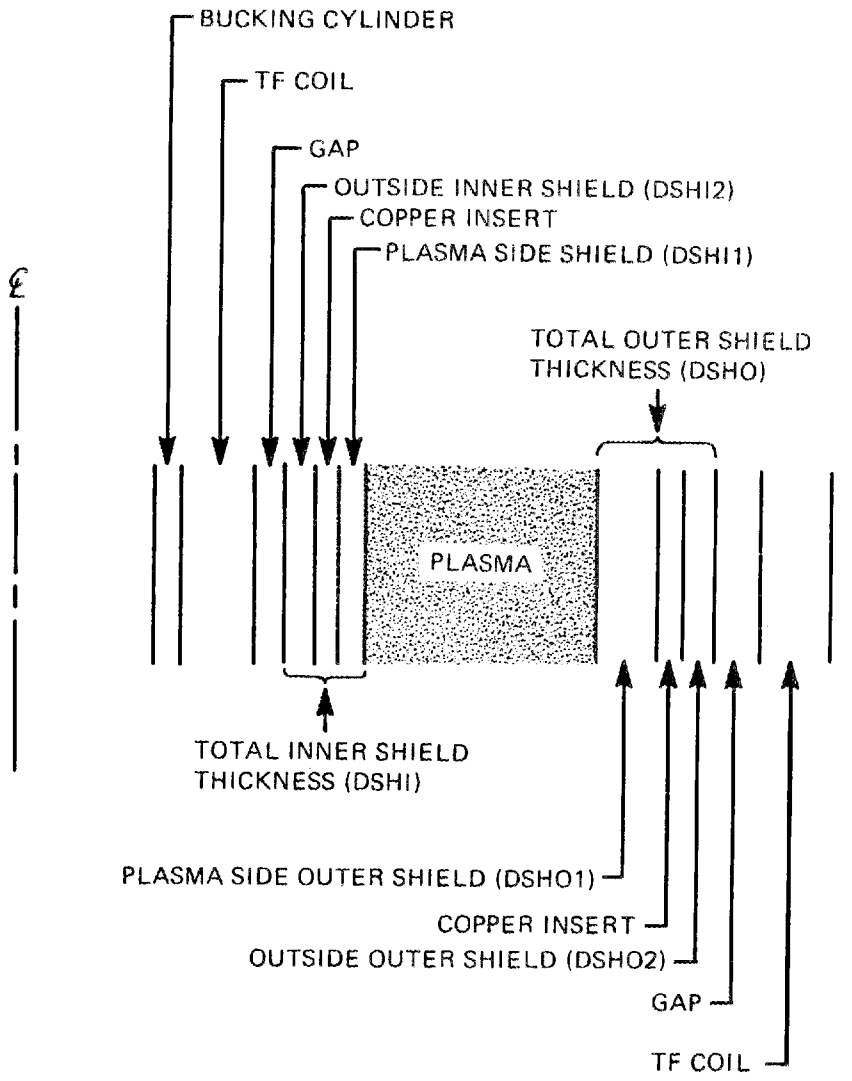

Fig. 24. Sketch of copper insert and shield configuration.

Table 12. TF module sample output

```
********************************** tftyp    **********************************

                          TF COIL SCHEMATIC

          |
          |<----- R3 ------,---------->
     |    |              .      *   .  . .  . .      .
     |    |             .    .   P3              .    .
     |    |            .    .                   .    *    .
     |    |           .    .      O             P2  .    .
     |    |           .    * P4     C3                .  <--.--- TF COIL C/L
     |    |           .    .                             .     .
  HMAX    |           .    .                            -->.    .<--- TF
     |    |           .    .            O                .    . THICKNESS
     |    |           .    .             C2                .    .
     |    |           .    .                               .    .
     |    |<-- R1 ----.->  .                               .    .
     |    |           .    .  C1                        P1  .    .
     V----|-----------.    .---O-------------------------------*    .-----
          |
          |<------------------------------ R2 ------------------>

----- Superconducting TF coils -----

tf coil data for - 10. tf coils  a/r = 3.850  a(m)= 1.300  b(m)= 2.080

   horiz design spaces(m) - outbd =  0.010  inbd =  0.180  dewar = 0.200
   wedge fraction = 1.00

   tf coil design allowables:
    ripple =              0.830
    conductor strain =   8.6500e-04  case stress (psi) =  3.1000e+04
    cond moduli  (psi) = 1.7000e+07  case moduli  (psi) = 2.8000e+07

   structure-to-conductor ratio =   0.575
   cond current density (a/cm2) =   2200.0
```

Table 12 (continued)

```
overall current density =        1396.6
field on axis (t) =               4.641

tf coil area (m2)=   0.832
 thicknesss =          0.628   delta cs =                0.121
 inside half width =   0.765   outside half width =      0.561   corner cut =0.000
 tma turns =    116.141
 cal ripple =     0.830
 ac loss su (kw) =  61.652
 ac loss sd (kw) =  20.562
 ac loss (kw) =   3.786
 max field(t) =  10.220

 stored energy/coil (gj) =   2.405
 mean coil circum. (m) =    33.717
```

coil geometry (measured from torroidal axis to c/l of winding. see above schematic)

```
 inner leg radius, r1 (m)            =  2.039
 outer leg radius, r2 (m)            = 10.498
 max hight, hmax (m)                 =  5.971
 radius to max hight, r3 (m)         =  5.287
 clear bore (m)                      =  7.432
 clear vertical bore (m)             = 10.915
```

coil inner surface dimensions (see above schematic)

```
[ x1(1) , y1(1) ]  [ x1(2) , y1(2) ]  [ x1(3) , y1(3) ]  [ x1(4) , y1(4) ]

[  10.18,   0.00]  [   8.51,   4.26]  [   3.53,   5.29]  [   2.35,   3.50]
```

center of tf coil arces (see above schematic)

```
[ xc(1) , yc(1) ]  [ xc(2) , yc(2) ]  [ xc(3) , yc(3) ]  [ xc(4) , yc(4) ]

[   3.94,   0.00]  [   5.29,   1.25]  [   4.31,   3.50]  [1000.00,   0.00]

 cond strain =  0.          case stress (psi) =0.
 cond area (m2) =   0.528   cond current (ka) =1.1614e+04   no.turns =     1.

hoop tension (mlbs) =   0.000  (   0.000 - mn)
cent. force (mlbs) =   65.647  ( 292.128 - mn)
hoop stress (psi) =0.
```

Table 12 (continued)

```
total resistivity (ohm-m) = 0.          resistive power (mw) =       0.

total tf cost (m$) = 163.408
        cond cost = 142.040   unit cost ($/kg) = 105.00
        case cost =  21.368   unit cost        =  26.00

icss cost =  17.825   unit cost        =  26.00

weisht per coil (kg*1e6) =  0.217
            cond weight =  0.135   density (kg/m3) = 8941.00   vftf = 0.15
            case weight =  0.082   density         = 8027.00
            icss weight =   0.686

  weight per coil (mlbs) =  0.479
            cond weight =  0.298   density (lb/in3) =   0.32   vftf = 0.15
            case weight =  0.181   density         =    0.29


----- cryostat data -----

cryostat radius (m) =  12.012
        cryostat height        (m) =  19.570
        cryostat cost (m$)=  19.279


----- bucking cylinder data -----

mod of elast (psi) = 3.3000e+07   fraction of cent. force =   1.15
yld str (psi) =      6.0000e+04   weisht (kg) =  2.5162e+05
poisson ratio =       3.000e-02   cost (m$) =     6.54

inside radii (m) =        1.470   bearing pressure (psi) =       6.449e+03
thickness (m) =           0.256   bucklins strs, capped, (psi) = 0.
sizins criteria = bucklins stress bucklins strs, open, (psi) =   3.3815e+04
```

4. POLOIDAL FIELD COIL MODULE

The PF coil module determines coil currents, number of turns, locations, resistive losses, weights, and cost of the PF system. The module maintains the PF coils in the same position (relative to the plasma edge, the bucking cylinder, the shield height, the TF coil radius, etc.) as the input reference PF coil system. The Equilibrium Field (EF) coil currents are scaled from the input reference values considering changes in coil locations and plasma current. The input reference EF system, upon which the scaling is based, was derived considering magnetohydrodynamic (MHD) requirements. The current in the OH solenoid is determined based on the maximum magnetic field allowed in the solenoid.

ASSUMPTIONS AND CONSTRAINTS

- The PF system (location and currents) is scaled from a reference system which was derived based on MHD.
- The PF configuration assumes an OH solenoid inboard of the bucking cylinder. The solenoid may be continuous or separated into two parts by an EF coil at the midplane.
- The individual EF coil currents are estimated to scale as the plasma current, as the distance from the coil to the center of the plasma squared, and inversely at the coil radius squared (Fig. 19).

$$I_c = \frac{I_p \dfrac{D^2}{R_c^2}}{\left(I_p \dfrac{D^2}{R_c^2}\right)_{REF}} \times (I_c)_{REF} \quad .$$

INPUT

Input to the PF modules includes current density, current per turn, void fraction, and resistivity for each PF coil. Specifying a resistivity of zero indicates a superconducting coil. A reference set of coil data containing radii, heights, and currents is input for scaling purposes. The location of each coil is specified by a parameter called "LOCATE," which is a symbol composed of two digits separated by an ampersand (&). The first digit identifies whether the coil is (1) an EF coil interior to the TF coil, (2) an EF coil exterior to the EF coil, (3) an OH component coil, or (4) an OH solenoid. The second digit specifies whether the coil is located (1) adjacent to the torus, (2) adjacent to the TF coil outer surface, or (3) adjacent to the bucking cylinder inner surface. (A value of 2 for the second digit is not currently used.) Figure 25 shows an example PF coil configuration. All these EF coils are exterior and adjacent to the TF coils, thus the parameter LOCATE would have a value of 2 & 3. The solenoid would be identified by LOCATE as 4 & 4. The coils can also be grouped into common circuits if desired by the input parameter INDEX. Two similar coils, one above and one below the midplane, would be a candidate for grouping into a circuit. If INDEX has a value of 1 for a coil, then that coil is an independent circuit. If INDEX has a value of 0, then that coil is grouped with other coils into a circuit. The grouping is ended by using a value of 1 for INDEX in the last coil of the group. Coils within a group must be entered in sequence in the input file.

A desired current waveform is also input for each EF circuit and is based on an MHD analysis of a similar configuration. The waveform is normalized to the coil current at the end of the burn, including the sign of the coil currents. The signs of the coil currents are relative to the direction of the plasma current with the sign of the plasma current being positive. The normalized waveform accounts for five time periods, namely, (1) OH coil charges period (may include dwell time for vacuum pump operation between pulses), (2) OH swing time, (3) plasma heating period, (4) steady-state burn time, and (5) plasma quench. An example waveform for an EF system is shown in Fig. 26. The individual

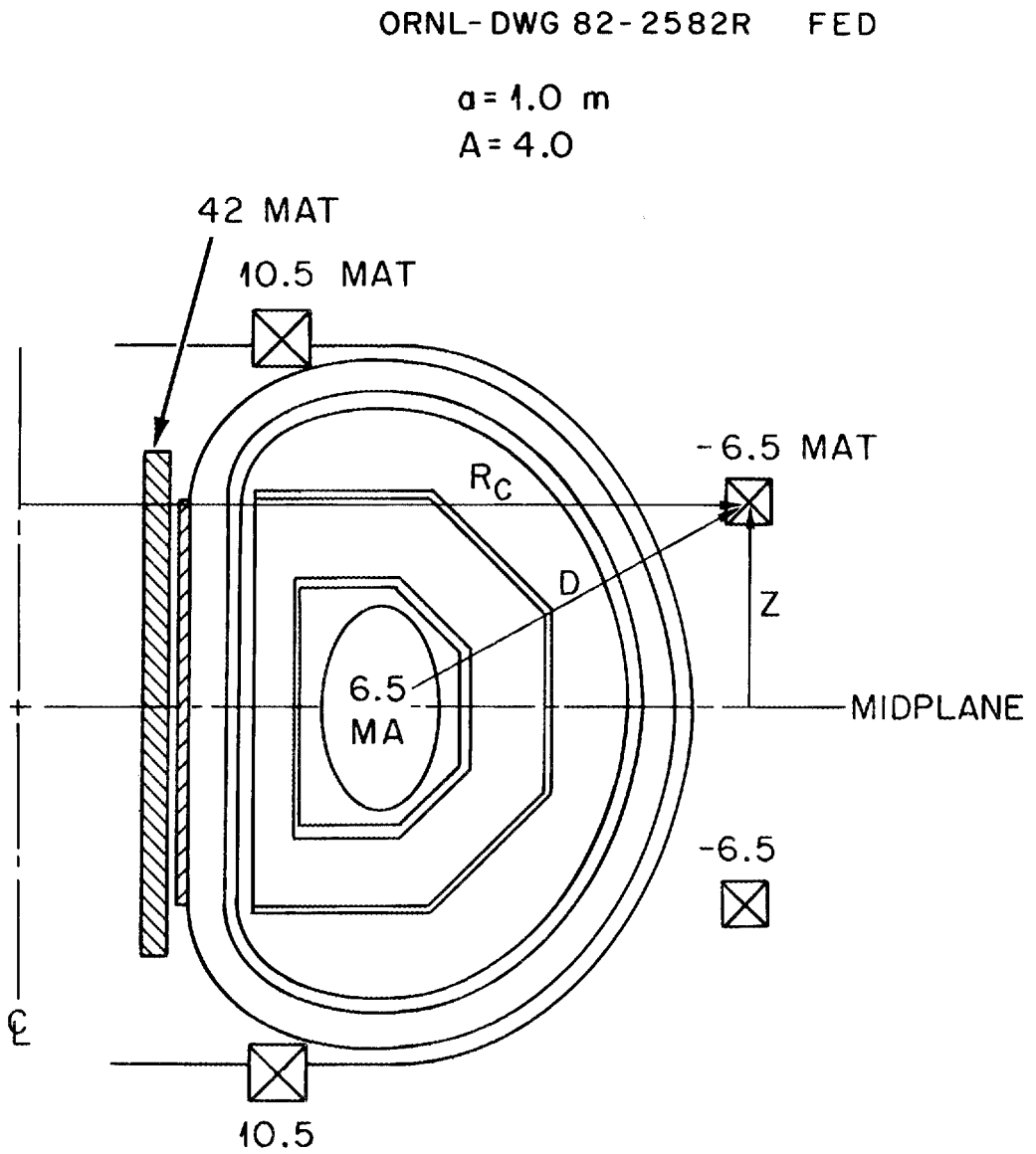

Fig. 25. Reference PF system for a plasma elongation of 1.6.

ORNL-DWG 84-3771 FED

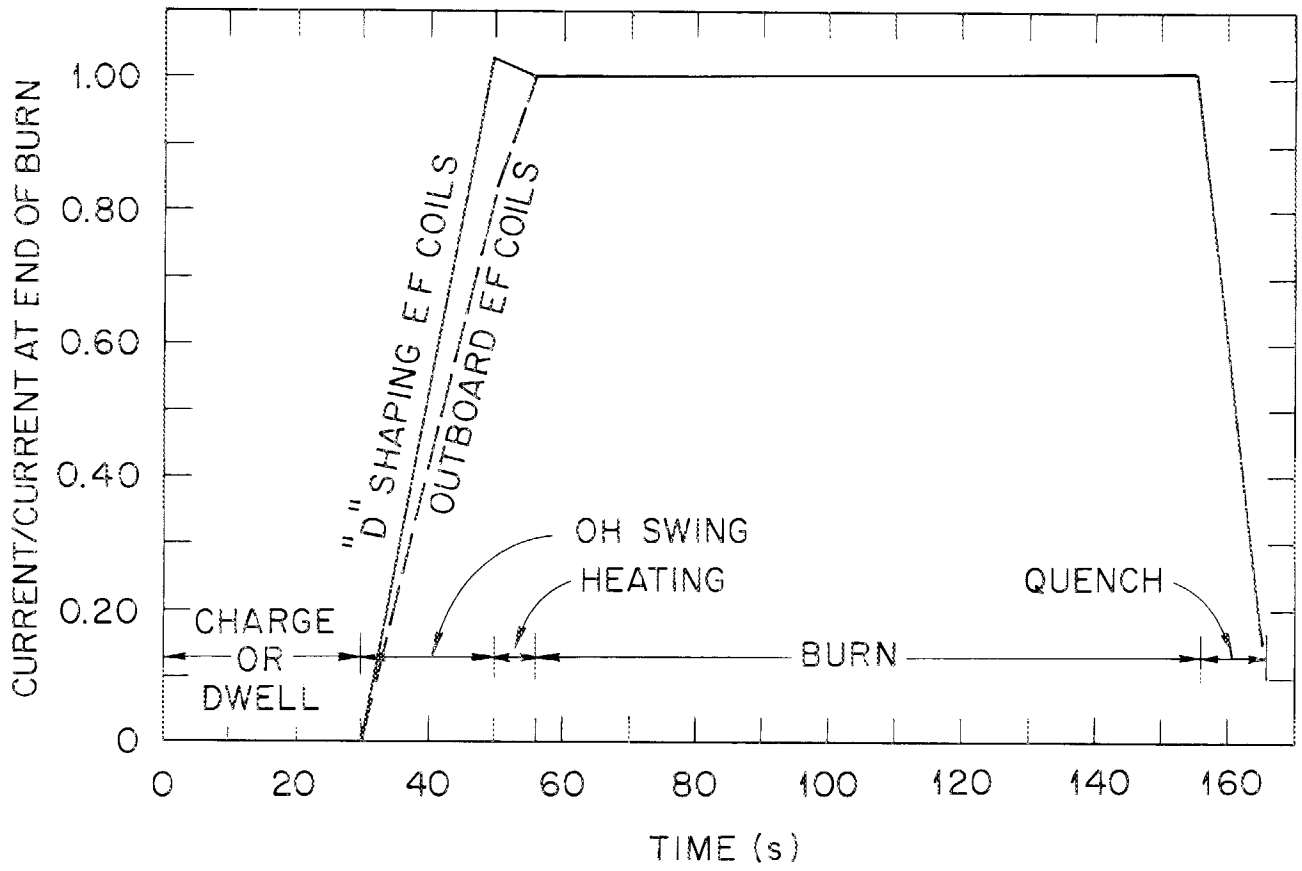

Fig. 26. Typical EF system current waveform.

waveforms may also be normalized to the peak current in each coil instead of the value of current at the end of burn.

Tables 13 and 14 list the PF module input items, and Table 15 is an example of the output.

Table 13. PF module input (code supplied)

Symbol	Description	Units
a	Plasma minor radius	m
ACASTR	Case stress	psi
BCYLIR	Bucking cylinder inner radius	m
HSHLD	Height (from plasma C/L) of outboard surface of shield	m
I_p	High beta plasma current	MA
IPLB	Low beta plasma current	MA
NSEQ	The number of time sequences in the cycle	--
R_o	Plasma major radius	m
ROUT	TF coil outer leg radial dimension (measure from machine C/L)	m
SEQTI(k)	Sequence duration of each portion of tokamak cycle	s
TFHT	Height of TF coil relative to plasma C/L	m

Table 14. PF module input (user-input items)

```
***** poloidal coil input data
*  aref          reference plasma minor radius            m
*  b(n)          magnetic field in oh solenoid            t
*  bohr          reference magnetic field in oh           t
*                   solenoid
*  bplasr        reference plasma half height             m
*  cptd(n)       current per turn in each pf coil         amps
*  gapboh        space between bucking cylinder and       m
*                   oh winding
*  hshldr        reference shield height measured         m
*                   from plasma c/l
*  icref(n)      reference pf coil currents               mega-amps
*  index(n)      coil grouping index
*                   =1 if coil is the last coil
*                      or only coil of a group
*                   =0 otherwise
*  iphbr         reference high beta plasma current       mega-amps
*  jconpf(n)        current density of each pf coil          amps/cm**2
*  locate(n)     pf coil location (a two-digit number)
*                   first digit:
*                   1  ef coil interior to tf coil
*                   2  ef coil exterior to tf coil
*                   3  oh component coil
*                   4  oh solenoid
*                   second digit:
*                   1  located off torus outer surface
*                   2  not used
*                   3  located off tf coil outer surface
*                   4  located off bucking cylinder inner radius
*                   (used in induct module)
*  n1            number of interior ef coils
*  n2            number of exterior ef coils
*  n3            number of oh component coils
*  n4            number of oh solenoids
*  nog           order of the gaussian integration
*                   (used in induct module)
*  mut           print option for inductance values
*  ohhshf        oh solenoid fraction of tf coil height
*  anch          fraction of oh current at plasma quench
*  rhopf(n)        resistivity of each pf coil              ohm-m
*  routr         reference tf coil outer leg dimension    m
*  roref         reference major radius                   m
*  rref(n)       reference radius of each pf coil         m
*  tfhtr         reference tf coil height from            m
*                   plasma c/l
*  ucc           unit cost of copper coil winding         dollars/kg
*  ucs           unit cost of ????
*  ucsc          unit cost of superconducting winding     dollars/kg
*  vf(n)         void fraction of each pf coil
*  zref(n)       reference height of each ef coil         m
*                   from plasma c/l
```

Table 14 (continued)

```
*&pfin
n1=2  n2=3  n3=0  n4=2
ohhshf=1.  anch=.33  sapboh=.125  ucsc=200.  ucc=30.  aref=1.3
iphbr=6.5  roref=5.  routr=10.19  bohr=7.  hshldr=3.63
bplasr=2.08  tfhtr=5.29 ucs=26.
cptd=1.2e5,1.2e5,5(5.e4),13(0.)
jconpf=1500.,1500.,1400.,1400.,1500.,1500.,1500.,13(0.)
vf=0.,0.,5(.6),13(0.)
b=4(0.),3(7.),13(0.)
locate='1&1','1&1','2&3','2&3','2&4','4&4','4&4',13('0&0')
rhopf=2.e-8,2.e-8,5(0.),13(0.)
icref=4.28, 3.74, -6.06, -9.08, -12., 0., 0., 13(0.)
rref=3.85, 3.05, 9.5, 9.5, 1.17, 0., 0., 13(0.)
zref=4.1, -3.8, 4.75, -5.7, 3(0.), 13(0.)
nog=2 mut=0
index=5(1),0,1,13(0)
*****************************************************************
*  waves          two-dimensional array containing current
*                 wave forms for each ef coil circuit from
*                 time equal to zero through the
*                 end of the burn cycle.  the wave form
*                 for the oh circuit is not input, but
*                 calculated internally.  first index
*                 labels circuit number, second labels
*                 time zones.
(waves(1,k),k=1,5) = 0.  0.421  1.014  0.892  1.,
(waves(2,k),k=1,5) = 0.  0.401  1.019  0.906  1.
(waves(3,k),k=1,5) =  0.  -0.0825  0.655  0.949  1.
(waves(4,k),k=1,5) = 0.  -0.099  0.632  0.967  1.
(waves(5,k),k=1,5) = 0.  -1.  1.  1.  1.
*&endpfin
```

Table 15. PF field coil module example output

********** pftgp **********

pf coils

coil	locate	current (ma)	current/turn (a)	turns	j (amp/cm2)	r* (m)
inside	1&1	4.22	117273.16	36.00	1500.00	3.85
inside	1&1	3.69	119036.04	31.00	1500.00	3.05
outside	2&3	-6.06	-49670.95	122.00	1400.00	9.49
outside	2&3	-9.08	-49909.30	182.00	1400.00	9.49
outside	2&4	-12.34	-49956.59	247.00	1500.00	1.16
oh sol.	4&4	-23.31	-49905.61	467.00	1500.00	1.16
oh sol.	4&4	-23.31	-49905.61	467.00	1500.00	1.16

		82.01				

zpf** (m)	wtc (ks)	wts (ks)	cost (m$)
4.07	61287.91	0.00	1.84
-3.77	42452.25	0.00	1.27
4.75	92855.09	144122.10	22.32
-5.70	139186.24	216033.53	33.45
0.00	21542.25	0.00	4.31
3.20	40280.78	0.00	8.06
-3.20	40280.78	0.00	8.06
	---	---	---
	437885.30	360155.63	79.31

* r is measured from the toroidal axis
** zpf is measured from horizontal mid-plane

GOVERNING EQUATIONS

DETERMINE RADIAL AND VERTICAL MOVEMENT OF EF COILS FROM REFERENCE LOCATIONS

If LOCATE is 1 & 1 (interior EF coil adjacent to torus)

$$\Delta R = (R_o - a) - (R_{o_{ref}} - a_{ref}) \text{ (m)} .$$

Change in coil radius based on movement of plasma edge location, where R_o = major radius and a = minor radius.

$$\Delta Z = toy(2) - hshld \text{ (m)} .$$

Change in coil height based on change in shield height, where toy(2) is the outside height of the shield.

Kfac = 0 .

No steel coil case considered for this class of EF coils.

If LOCATE is 2 & 3 (exterior EF coil adjacent to the TF coil and the reference coil radius is less than the major radius)

$$\Delta R = (R_o - a) - (R_{o_{ref}} - a_{ref}) \text{ (m)} .$$

Change in coil radius based on movements of plasma edge location.

$$\Delta Z = tfht - tfhtr \text{ (m)} .$$

Change in coil height based on change in TF height, where tfht is the height of the TF coil [point y1(3) of coil inner surface dimensions].

Kfac = 1.0 .

Steel case is included for this class EF coil.

If LOCATE is 2 & 3 and $R_{c_{ref}} > R_{o_{ref}}$ (exterior EF coil adjacent to TF coil and reference coil radius is greater than reference major radius)

ΔR = X1(1) - routr (m) .

Change in EF coil radius based on movement of TF coil outer leg. X1(1) is the TF coil outer leg radius and routr is the reference TF coil outer leg radius.

ΔZ = tfhf - tfhtr (m) .

Change in EF coil height based on change in TF coil height.

Kfac = 1.0 .

Steel case considered for this class of EF coils.

If LOCATE is 2 & 4 (an EF coil embedded in the OH solenoid—the coil located off the inside of bucking cylinder at the horizontal midplane)

Kfac = 0 .

No steel coil case considered for this class of EF coils.

If LOCATE is 3 & 3 (the EF component coil is moved in the same fashion as the 2 & 3 coils.)

Kfac = 0 .

No steel coil case considered for this class of EF coils.

If LOCATE is 4 & 4 (the OH solenoid is located off the inner surface of the bucking cylinder vertically centered about the horizontal midplane.)

Kfac = 0 .

No steel coil case considered for this class of EF coils.

DETERMINE LOCATION OF EACH EF COIL

R_c = rref + ΔR (m) .

Radius to coil midpoint.

Z = zref + ΔZ (m) .

Height from midplane to coil midpoint.

$$D = \sqrt{(R_c - R_o)^2 + Z^2} \text{ (m)} .$$

Distance from plasma center to center of EF coil, where R_o is the plasma major radius.

DETERMINE EF COIL CURRENT

$$I_c = I_{c_{ref}} \times \frac{I_p}{I_{p_{ref}}} \times \left(\frac{D}{D_{ref}}\right)^2 \times \left(\frac{r_{c_{ref}}}{R_c}\right)^2 \text{ (MA)} ,$$

for all EF coils except OH component coils.

I_p is the plasma current and $I_{p_{ref}}$ is the reference plasma current.

The OH component coil currents are scaled as a function of the solenoid MAT:

$$I_c = I_{c_{ref}} \times \frac{B_{OH} \times \text{tfht} \times \text{ohhghf}}{B_{OH_{ref}} \times \text{tfhtr}} \quad (\text{MA}) \ .$$

OH component coil current where B_{OH} is the solenoid field, ohhghf is the fraction of the TF height used for the solenoid height.

CALCULATE CONDUCTOR AREA OF EF COIL

$$\text{Area} = \frac{I_c \times 10^6}{\text{JCONPf}} \quad (\text{cm}^2) \ ,$$

where I_c is the coil current (MA) and JCOMPf is the coil current density (A/cm^2).

CALCULATE EF COIL GEOMETRY (except for 2 & 4 coil)

Conductor cross sections are assumed square.

$$dx = \sqrt{\text{area}}\,/2 \ (\text{cm}) \ .$$

Coil thickness.

$$r_a = R_c \times 100 - dx \ (\text{cm}) \ .$$

Coil inner radius.

$$r_b = R_c \times 100 + dx \ (\text{cm}) \ .$$

Coil outer radius.

$Z_\ell = Z \times 100 - dx$ (cm) .

Height to bottom of coil.

$Z_h = Z \times 100 + dx$ (cm) .

Height to top of coil.

CALCULATE NUMBER OF TURNS FOR EF COIL

$$\text{turns} = \frac{I_c \times 10^6}{\text{cptd}} ,$$

where cptd is current per turn (A).

DETERMINE OH COIL LOCATION (and 2 & 4 EF coils)

$r_b = \text{bcylir} \times 100 - \text{gapboh} \times 100$ (cm) .

OH solenoid outer radius where bcylir is the bucking cylinder inner radius; gapboh is the gap between the bucking cylinder and OH winding.

$$\Delta X_{sol} = \frac{(B_{OH}) \times 100}{(4\pi \times 10^{-7})\text{JCONPF} \times 10^4} \text{ (cm)} .$$

OH solenoid thickness where B_{OH} is the field in the solenoid (T).

$r_a = r_b - \Delta X_{sol}$ (cm) .

OH solenoid inner radius.

If $r_a < 0$, write "insufficient spacer for OH solenoid."

$$Z_h = \text{tfht} \times \text{ohhghf} \times 100 \text{ (cm)} .$$

Height from midplane to top of OH solenoid.

$$Z_\ell = -Z_h \text{ (cm)} .$$

Height from midplane to bottom of solenoid.

DETERMINE OH CURRENT & TURNS

$$I_c = (\text{JCONPF})(Z_h - Z_\ell) \frac{\Delta X_{sol}}{10^6} \text{ (MA)} .$$

OH coil current.

$$\text{turns}_{OH} = \frac{I_c \times 10^6}{\text{cptd}} \text{ (turns)} .$$

If the solenoid is split, the height of the 2 & 4 EF coil (which is itself a small solenoid) is removed from the center section of the integral OH solenoid.

CALCULATE COIL RESISTANCE

$$L = 2\pi R_c \text{ (m)} .$$

Coil length.

$$res = \frac{rhopf \times L}{area \times 10^4} \ (\Omega) \ .$$

Coil resistance where rhopf is the resistivity.

$$resn2 = res \times (turn)^2 \quad (\Omega) \ .$$

Form of resistance used in ELEPOW routine to calculate resistive losses.

CALCULATE VOLUME, WEIGHT, AND COST FOR EF COILS

$$VOLPF = area \times 10^4 \times L \ (m^3) \ .$$

Conductor volume.

$$Wt_{cond} = VOLPF \times 8990 \times (1 - vf) \ (kg) \ .$$

Conductor weight where vf is the conductor void fraction.

$$Wt_s = Kfac \times 225000. \times \frac{I_c}{6.1} \times \frac{R_c}{9.5} \times \frac{20000}{ACASTR} \ (kg) \ .$$

Structure weight where ACASTR is the allowable case stress in pounds per square inch.

$$\$M = \frac{UCC \times Wt_{cond}}{10^6} + \frac{UCS \times Wt_s}{10^6} \quad (\$million) \ .$$

Coil cost.

CALCULATE VOLUME, WEIGHT, AND COST FOR OH SOLENOID

$$CIRC = 2\pi R_c \ (m) \ .$$

Circumference of OH solenoid.

$$Vol = CIRC \times (Z_h - Z_\ell) \times \frac{\Delta X_{sol}}{10^4} \ (m^3) \ ,$$

$$Wt_{sol} = 8900 \times vol \times (1 - vf) \ (weight) \ ,$$

$$\$M = UCC \times \frac{Wt_{sol}}{10^6} \ (cost) \ .$$

GENERATE CURRENT PER TURN FOR EACH COIL FOR EACH TIME PERIOD OF THE TOKAMAK CYCLE

CPT(i,k) = waves (i,k) * cptd(i)/1000 (kA) ,

where

i = 1 - number of EF circuits,
k = 1 - number of time periods,
waves (i,k) is the input current waveform.

OH Solenoid Current Per Turn

CPT = cptd/1000 (kA) .

Current per turn at the beginning and end of tokamak cycle. Current per turn at the end of the OH swing and at the end of burn is determined in the volt-second module.

CIRCUIT RESISTANCE

If there is one coil per circuit, then the resistance of the circuit is simply the resistance of the coil:

$$res_{crt} = res \ .$$

If the circuit contains more than one coil,

$$res_{crt} = \sum_{i=1}^{N} res(i) \ ,$$

where N is the number of coils in the circuit.

5. INDUCTANCE MODULE

SUMMARY

This program calculates self- and mutual-inductances for a set of concentric circular coils. If the coil set consists of several subgroups, the programs will also calculate self- and mutual-inductances among various subgroups. The calculations are based on Gaussian integration and use elliptic functions. The coefficients of elliptic functions are included in the Fortran listing. This program was developed at Oak Ridge National Laboratory (ORNL) and has been in use there for a number of years.

MODULE INPUT

The program obtains the number of PF coils, their inside and outside radii, and winding current densities from the PF coil module. The inductance calculation is based on a uniform current density over the winding pack.

6. FLUX LINKAGE MODULE

The flux linkage module computes the volt-seconds available from the PF system, EF system, and the OH solenoid to induce the plasma current and maintain it during the burn. The available volt-seconds are based on the current waveforms for each coil generated in the PF module and for the inductance matrix generated in the inductance module. The plasma current and volt-seconds required for startup are computed in the physics module. If more volt-seconds are produced by the PF system, assuming a full plus (+) to minus (-) flux swing in the OH solenoid, than are required to induce the plasma current, as specified by the physics module, the excess volt-seconds are available to sustain a burn pulse. If fewer volt-seconds are provided by the PF system than are required for startup, the code execution continues based on one of the three following options controlled by the variable IOPT. If IOPT = 1, there is no iteration on burn time, and the code continues to the next module. An input value of burn time, contained in the physics input, is passed to the remainder of the code (to calculate duty factor, etc.) regardless of the value of burn time calculated by an excess or deficiency of volt-seconds from the PF system. If IOPT = 1, the aspect ratio is adjusted, through an iteration back to the physics module, until the calculated burn time, based on inductive volt-seconds, equals the input value of burn time. If IOPT = 2, the input value of burn time is adjusted through an iteration until it equals the calculated value of burn time consistent with the input aspect ratio.

ASSUMPTIONS AND CONSTRAINTS

- An ohmic heating solenoid is always assumed.
- The maximum current in the ohmic heating solenoid is based on the maximum field allowed in the solenoid. The maximum current swing is twice the maximum OH coil current. [Swing is from plus (+) to minus (-) the maximum current.]

MODULE INPUT

Key input items to the volt-seconds module include the inductance matrix for the EF and OH coils, the current waveforms (current as a function of time) for the EF coils, and the required volt-seconds for current startup (i.e., current induction). The input parameters are listed in Table 16. Example output is given in Table 17.

Table 16. Volt-seconds module input parameters.

Symbol	Description	Units	Source[a]
AR	Aspect ratio		C
CPT(i)	Current per turn in each coil for each time period of the tokamak cycle	kA	C
IOPT	Burn time option		C
M(i)	Mutual inductance between each coil and the plasma	H	C
NCIRT	Number of circuits		C
TBURN	Input value of burn time	s	C
V	Plasma voltage during burn	V	C
VSSTT	Required volt-seconds for startup	2b	C

[a]V = input is supplied by user; C = input flows in from other modules of the code.

Table 17. Volt-seconds module output

max. burn time (sec) = 99.86

	volt-sec start-up	volt-sec burn	volt-sec total
ef :	-29.21	0.00	-29.21
oh :	-61.97	-6.89	-68.86
total:	-91.18	-6.89	-98.07

summary of volt-second by circuit during start-up

circuit	
1	7.96
2	7.96
3	-22.57
4	-22.57
oh	-61.97
	-91.18

wave forms
current per turn (Ka)

	time (sec)					
circuit	0.00	30.00	50.00	56.00	156.00	166.00
1	0.00	0.00	50.97	49.63	49.63	
2	0.00	0.00	50.97	49.63	49.63	
3	0.00	0.00	-40.65	-49.57	-49.57	
4	0.00	0.00	-40.65	-49.57	-49.57	
oh	16.49	49.98	-39.98	-39.98	-49.98	
plasma(ma)	0.00	0.00	5.32	5.85	5.85	

GOVERNING EQUATIONS

DETERMINE VOLT-SECONDS CONTRIBUTED BY EF COIL DURING STARTUP

$$VS(i) = M_{(p,i)} \times \left(CPT_{(i,4)} - CPT_{(i,2)}\right) \times 1000 \ ,$$

where

$M_{(p,i)}$ is the mutual inductance between coil i and the plasma,
$CPT_{(i,4)}$ is the current per turn of coil i at time sequence 4 (end of heating),
$CPT_{(i,2)}$ is the current per turn of coil i at time sequence 2 (start of OH swing).

$$VS_{EFSU} = \sum_{i=1}^{(NCIRT-2)} VS(i) \ .$$

Total volt-seconds contributed by EF coils during startup, where NCIRT is the number of EF circuits plus the OH plus the plasma.

CALCULATE TOTAL VOLT-SECONDS AVAILABLE FROM OH SOLENOID

$$VS_{OH} = M_{(P,OH)} \times \left(CPT_{(OH,5)} - CPT_{(OH,2)}\right) \times 1000 \ ,$$

where

$M_{(P,OH)}$ is the mutual inductance between the plasma and OH solenoid,
$CPT_{(OH,5)}$ is the current per turn of the OH solenoid at time sequence 5 (end of burn) which is equal to the negative of $CPT_{(OH,2)}$ [plus (+) to minus (-) OH coil flux swing].

CALCULATE TOTAL VOLT-SECONDS AVAILABLE FOR STARTUP

$$VS_{TOTSU} = VS_{EFSU} + VS_{OH} \quad (W) \ .$$

TEST TO DETERMINE IF ADEQUATE VOLT-SECOND IS AVAILABLE FOR STARTUP

If $VS_{TOTSU} < VSSTT$, write message

"insufficient volt-second for startup"

where

VSSTT is the required volt-second for startup computed in the physics module.

COMPUTE THE REDUCED OH FLUX SWING NECESSARY JUST TO ACHIEVE STARTUP (if more volt-seconds are available from the PF system than required)

$$VS_{OHSU} = VSSTT - VS_{EFSU} \ .$$

Volt-seconds required from OH solenoid to achieve startup.

$$\Delta I_{OH} = \frac{VS_{OHSU}}{VS_{OH}} \times 2.0 \times CPT_{(OH,2)} \ .$$

Current swing in OH solenoid (kA).

$$CPT_{(OH,3)} = CPT_{(OH,2)} - \Delta I_{OH} \ .$$

Current per turn in OH solenoid at end of OH swing (kA).

$$VS_{SU} = VS_{EFSU} + VS_{OHSU} \ .$$

Total volt-seconds required for startup.

CALCULATE VOLT-SECONDS AVAILABLE FOR BURN PULSE
(including EF contribution)

$$VS_{OHBN} = VS_{OH} - VS_{OHSU} \ .$$

Volt-seconds available from solenoid for burn. (This value will be negative if there are insufficient volt-seconds for startup.)

$$VS(i) = M_{(p,i)} \left(CPT_{(i,5)} - CPT_{(i,4)} \right) \times 1000 \ .$$

Volt-seconds available from a single EF coil for burn pulse,

where $CPT_{(i,5)}$ is the current per turn of EF coil i at the end of burn.

$$VS_{EFBN} = \sum_{i=1}^{NCIRT-2} VS(i) \ .$$

Total volt-seconds from EF system available for burn pulse.

$$VS_{BN} = VS_{OHBN} + VS_{EFBN} \ .$$

Total volt-seconds available for burn.

CALCULATE BURN TIME

$$\text{BURNT} = \frac{VS_{BN}}{V} \quad (s) \ ,$$

where

V is plasma loop voltage during burn.

ITERATION OPTION

If IOPT = 0, the tokamak systems code goes to the next module and the input value of burn time (TBURN) is used throughout regardless of the calculated value of burn time, BURNT.

IF IOPT = 1, the tokamak systems code iterates back to the physics mode and changes aspect ratio until the calculated value of burn time (BURNT) equals the input value of burn time (TBURN).

IF IOPT = 2, code iterates back to the physics module and changes TBURN until it equals the calculated value BURNT.

A typical plot of current as a function of time for the EF coils, OH solenoid, and plasma is shown in Fig. 27 for the tokamak configuration of Fig. 28.

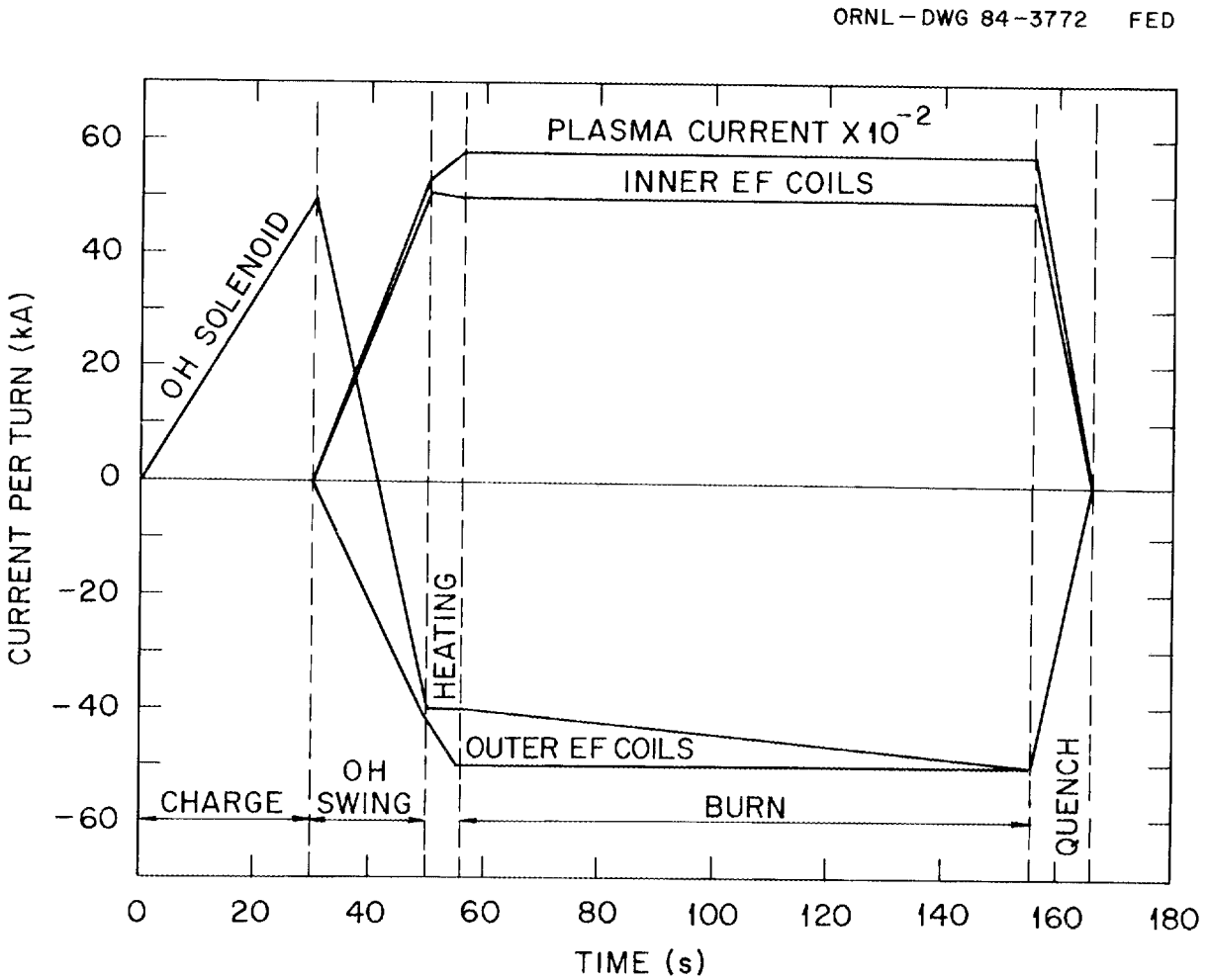

Fig. 27. Current as a function of time.

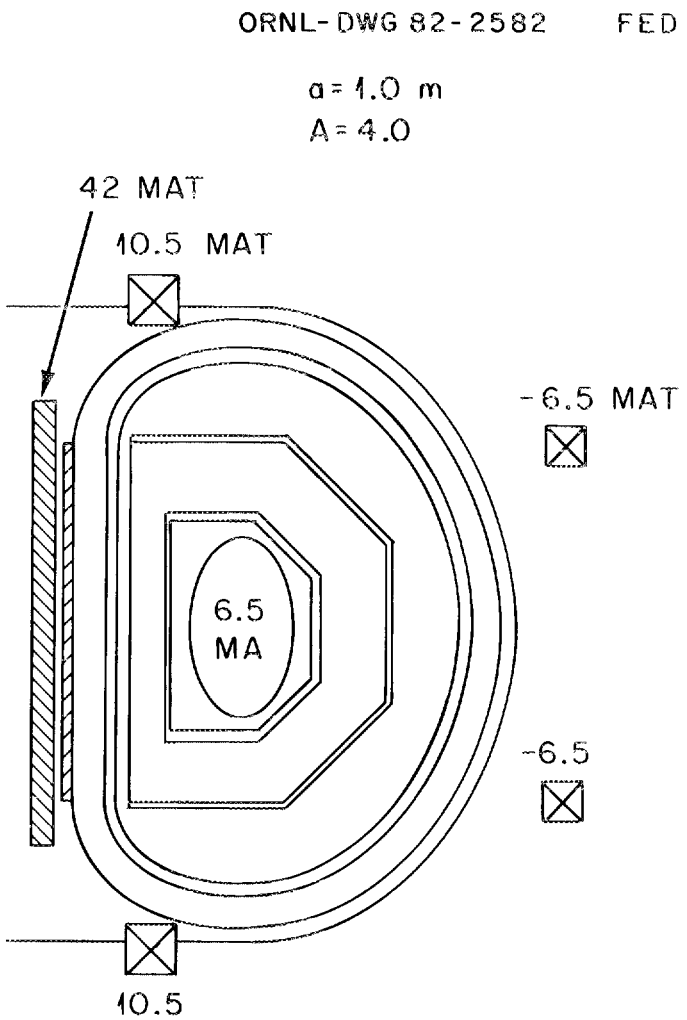

Fig. 28. Reference PF system for a plasma elongation of 1.6.

7. PLASMA HEATING SYSTEM

RFH MODULE

The radio frequency heating (rfh) module estimates the salient parameters of the rf systems, such as frequency, prime power, efficiency, facility floor space, and cost in dollars or dollars per watt of injected (launched) power. Three frequency regimes are accommodated, namely, ion cyclotron resonance heating (ICRH), lower hybrid resonance heating (LHRH), and electron cyclotron resonance heating (ECRH). Experiments and/or studies have been carried out that apply each of these regimes to the three functions of preheating (usually electron heating), current drive, and bulk heating. Through a series of trade studies on devices such as the Engineering Test Facility (ETF), Fusion Engineering Device (FED), and Tokamak Fusion Core Experiment (TFCX), drawing on confinement experimental results, it has been determined that ECRH is best for preheating, LHRH is preferred for current drive, and ICRH is the most effective for bulk heating. When the code was written in 1980, current drive was done with a transformer during all phases of the device's operating cycle. At that time, the current drive function was not included in the rf code. Variables had prefixes indicating the regime, such as: EC for electron cyclotron, XC for ion cyclotron, and XH for lower hybrid, followed by suffixes for function, such as: BH for bulk heating and SU for startup. There was no suffix used for current drive—an appropriate one would be CD, obviously. Figure 29 shows an overall flowchart of the rfh module. The original input file contains triggers that establish which regime and function are to be assumed in estimating the parameters.

In this modified code, the plasma power for each function has a different variable name. The triggers operate based on a nonzero value for these variables. Starting at the input in Fig. 29, the first test is for an ECRH startup function. Next, there is a test to see if neutral beams are used, if not, either ICRH or LHRH bulk heating is possible. The code utilizes the percentage of bulk heating power supplied by the ICRH (PERIC) to calculate the power required from each of the ICRH and

ORNL-DWG 84-3849 FED

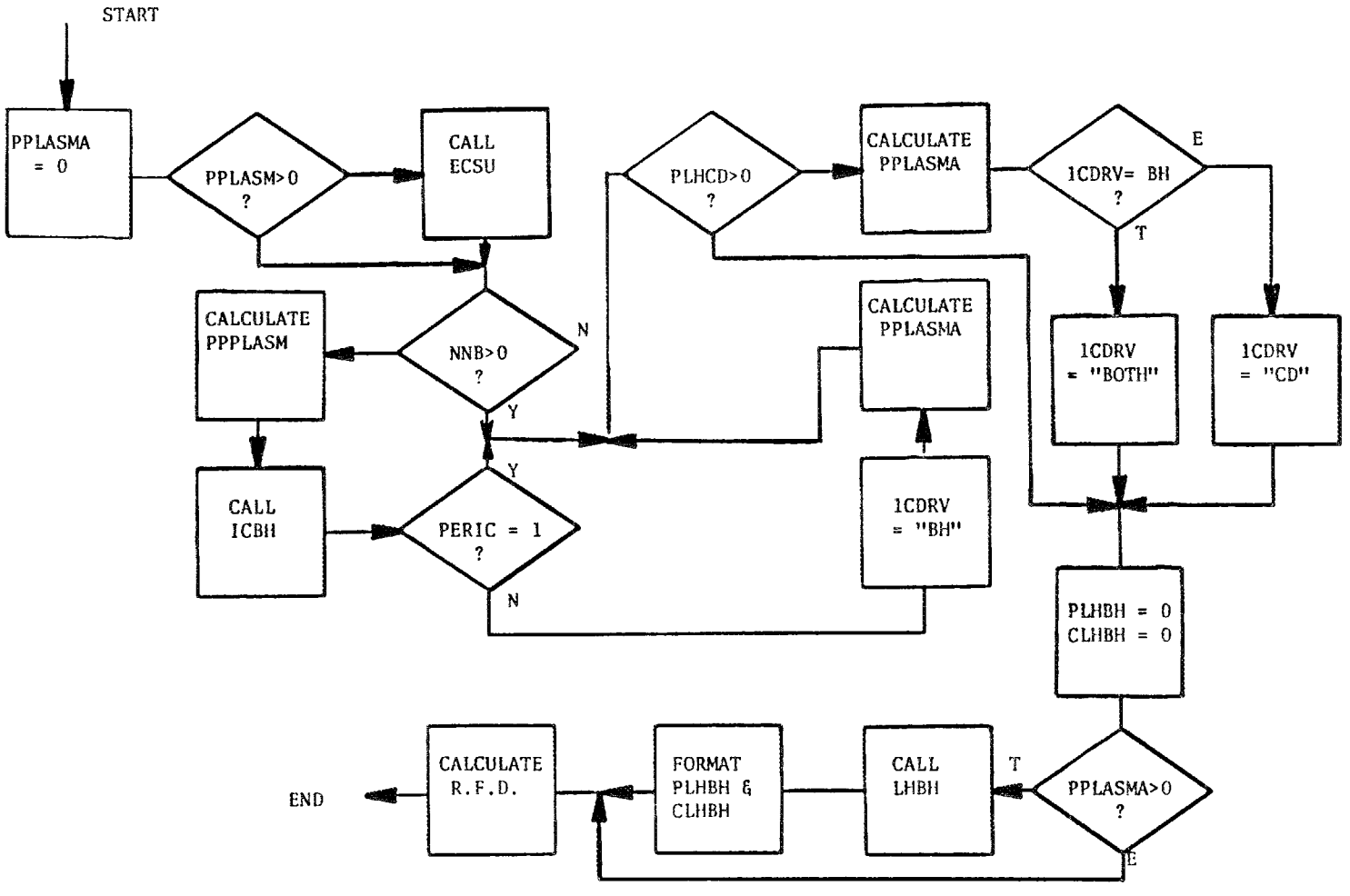

Fig. 29. RFH module flowchart

LHRH systems. After the ICRH subroutine has been completed, there is a check to see if LHRH is to be used for bulk heating and if so, the power required is calculated. Another branching is decided by the value of PLHCD (power needed for current drive). The total lower hybrid system power (PPLASMA) needed to perform the curent drive and/or bulk heating function(s) is then calculated, along with flags that indicate whether the LHRH system is performing both functions or only current drive. If PPLASMA is greater than zero, the LH code is called. If not, the driver goes directly to the calculation of rf system cost (RFD).

In the original code, the estimates were based on a series of algorithms for cost, prime power, efficiency, and facility floor space. The power injected was the independent variable. These algorithms described a curve which was fitted to experience points. Since the cost, prime power, and facility space are not linear functions of power, the algorithms contained four terms.

In 1983, a new code was written for the lower hybrid regime. This code is a design code which arranges the components to meet power, space and frequency requirements. A configuration, along with its performance and cost, is generated.

In the description that follows, the three older codes (that is, ECSU, ECBH, and XCBH) will be treated first, followed by the more extensive treatment of the XHBH and XHCD. In each discussion, assumptions, inputs, equations, and outputs will be covered.

ELECTRON AND ION CYCLOTRON REGIMES

Major Assumptions and Constraints

Since the algorithms used for these regimes are based on a curve fit to data, the goodness of fit is only acceptable over a limited range in injected power. This constraint is 15 MW for electron cyclotron. It is assumed that the cost, power, and facility space estimates are for a complete system (power supply, power chain, exciter/driver/transmission system, launcher, instrumentation and controls, and ancillary). The dollar figures are for FY 1983.

Module Inputs

Table 18 summarizes the input variables and their definitions. It should be noted that the code can calculate the cyclotron frequency for different fuel mixtures and harmonics of the species' cyclotron frequency.

Governing Equations

Each of the dependent variables (cost, facility space, prime power) is calculated using an equation of the form

$$y = a + bx + cx^2 + dx^3 + ex^4 .$$

In some cases, either a or e is zero. The coefficients a to e are contained in the EXNUMS subroutine. Efficieicy is calculated as the ratio of power injected to prime power.

Module Outputs

Table 19 summarizes the output variables and their definitions. An examination of the code will show that additional frequencies are calculated but have not been included in this version of the output file.

LOWER HYBRID REGIME

Major Assumptions and Constraints

A basic configuration is assumed for the LHRH and is built into the code. This configuration assumes a klystron power amplifier driving multiple elements (waveguides) in a column of a Brambilla Grille. There is a specific lineup of components between the tube and the element for which assumptions have been made about performance and cost. Figure 30 (parts a through e) shows the configuration details. The component costs are written into the code. An economy-of-scale factor is used which scales the cost by the power to the three-quarters. In each

Table 18. ECRH and ICRH input file from rfh module

Variable	Definition
PPPLASM	Power injected or launched for ICBH (MW)
PPLASM	Power injected or launched for ECRH (MW)
FUNCT	Heating function; 1 for startup, 2 for bulk heating
FREQ	Frequency regime; 1 for ECRH, 2 for LHRH, 3 for ICRH
NERF	Electron density (m^{-3})
FUEL1	Atomic mass unit of fuel #1 in the fuel mix; 1 for hydrogen, 2 for deuterium, 3 for tritium
FUEL2	Atomic mass unit of fuel #2 in the fuel mix
FMIX	Fraction of fuel mix assigned to fuel #1
PERIC	Percent of bulk heating power which is ion cyclotron power

Table 19. ECRH and ICRH output file from rfh module

Variable	Description
PPLASM	Power injected by the ECRH system (MW)
ECSUEF[a]	ECRH startup system efficiency
ECSUP[a]	ECRH startup system prime power (MW)
F1	ECRH system frequency (GHz)
ECSUD[a]	Cost of ECRH startup system ($ million)
ECSUD/PPLASM[a]	Unit cost of ECRH system ($/W)
ECSUFS[a]	ECRH startup system facility space (m^2)
PPPLASM	Power injected by the ICRH system (MW)
XCBHEF	ICRH bulk heating system effieiency
XCBHP	ICRH bulk heating system prime power (MW)
F1AVG	Average fundamental ICRH frequency (GHz)
XCBHD	Cost of ICRH bulk heating system ($ million)
XCBHD/PPPLASM	Unit cost of ICRH bulk heating system ($/W)
XCBHFS	ICRH bulk heating system facility space (m^2)

[a]The same set is available for bulk heating with BH substituted for SU; for example, EXSUEF → ECBHEF for ECRH bulk heating efficiency.

ORNL–DWG 84-3850 FED

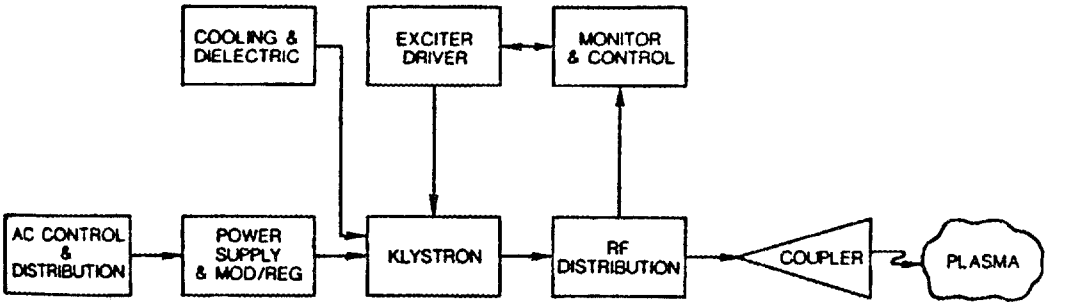

a) LH system block diagram.

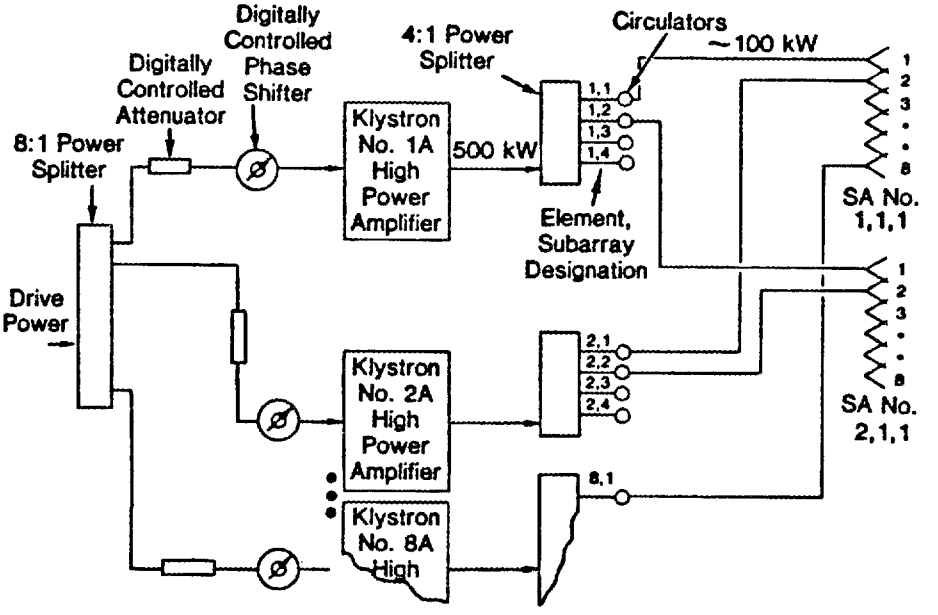

b) Klystron connection diagram.

Fig. 30. LHBH (or LHCD) subroutine configuration diagrams.

ORNL-DWG 84-3851 FED

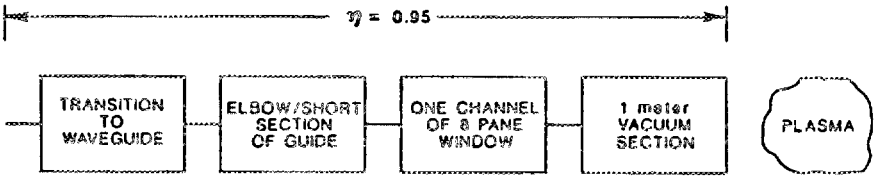

c) Launcher component arrangement.

d) Transmission and distribution line-up.

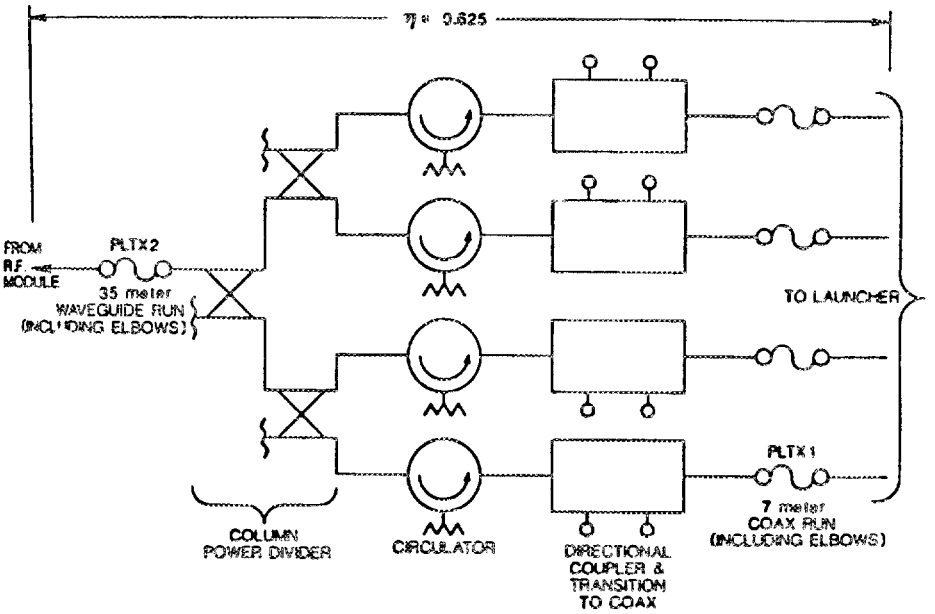

e) RF power module component layout.

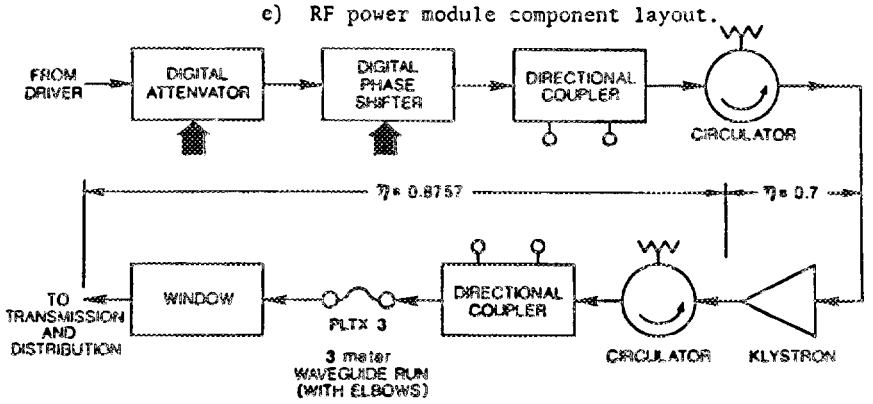

Fig. 30. LHRH (or LHCD) subroutine configuration diagrams (continued).

subroutine, an estimate of ∿10 to 15% is added to the hardware cost for bulk material such as bolts, brackets, fittings, etc. In addition, an assumption is made for factor fabrication and test labor for each equipment group. This assumption is written into the code at the end of each subroutine and ranges from around 10 to 15% of the hardware cost. A learning-curve factor is used to adjust the cost of the LH system when two or more ports are used. This adjustment is applied near the end of the code in the WATCOST subroutine. Performance assumptions such as transmission losses, klystron efficiency, amplifier gain, etc., are written into the code either in the subroutines or the expert file.

Module Support

Table 20 summarizes the input file used in the lower hybrid portion of the rfh module.

Module Flowchart and Equations

Figures 31 through 38 are a series of flowcharts that delineate the operation of the code. This description and arrangement of subroutines follows the configuration of equipment as given in the block diagrams in Fig. 30. It starts with the launcher and works back through the system to the power supply. Subroutines that tally costs, estimate facility space, and write the output file complete this portion of the code.

1. LAUNCHER subroutine: Figure 31 shows the flowchart. The number of columns (each made up of subarrays) is first estimated by the following procedure:

   - Calculate waveguide width by
     ES-WGTHICK
   - Calculate height by
     1.91*f/c (c = speed of light)
   - Estimate number of elements by
     PPLASMA/NP/PWRDENI/element area
   - Calculate number of subarrays by
     number of elements/EPSA

Table 20. RFHIN LHBH input file

Variable	Description
f	Frequency (GHz)
XMAXWID	Maximum allowable launcher width (cm)
XMAXHITH	Maximum allowable launcher height (cm)
PWRDENI	Maximum allowable power density (kW/cm^2)
ES	Element spacing, toroidal (cm)
WGTHICK	Waveguide wall thickness (cm)
EPSA	Element per subarray
SBSAV	Space between subarrays, vertical (given in number of ES)
SBSAH	Space between subarrays, horizontal (given in number of ES)
XLANL	Launcher length (cm)
PLTX1	Path length, launcher to divider (m)
2	Path length, divider to module (m)
3	Path length, module to driver (m)
4	Path length, driver to exciter (m)
PML	Path length, launcher to PM (m)
A	Path length, module to PM (m)
D	Path length, driver to PM (m)
NP	Number of ports
EFFK	Klystron efficiency
WINDB	Loss, launcher window (dB)
PPFLUX	Prime power fluctuation
PERCENRG	Regulation (%)
DCLOS	Loss, directional coupler
WINLOS	Loss, transmission line window
CIRCLOS	Loss, circulator

ORNL–DWG 84-3852 FED

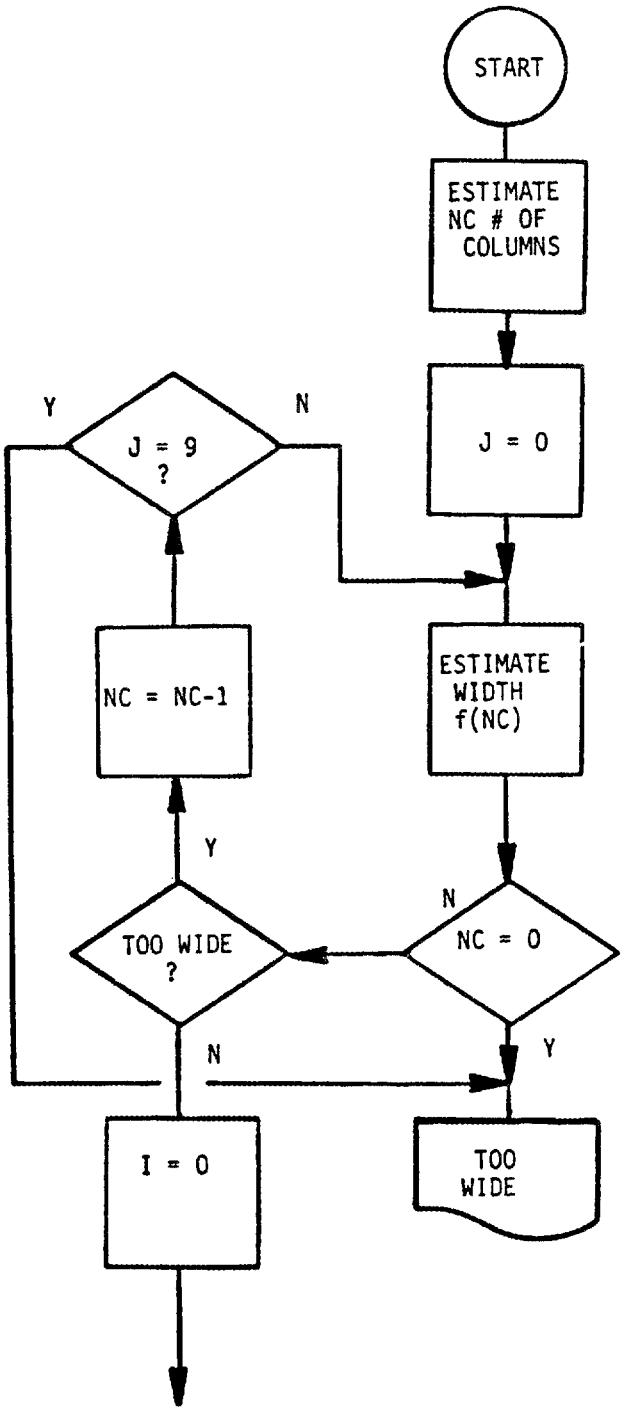

Fig. 31. Launcher subroutine flow diagram.

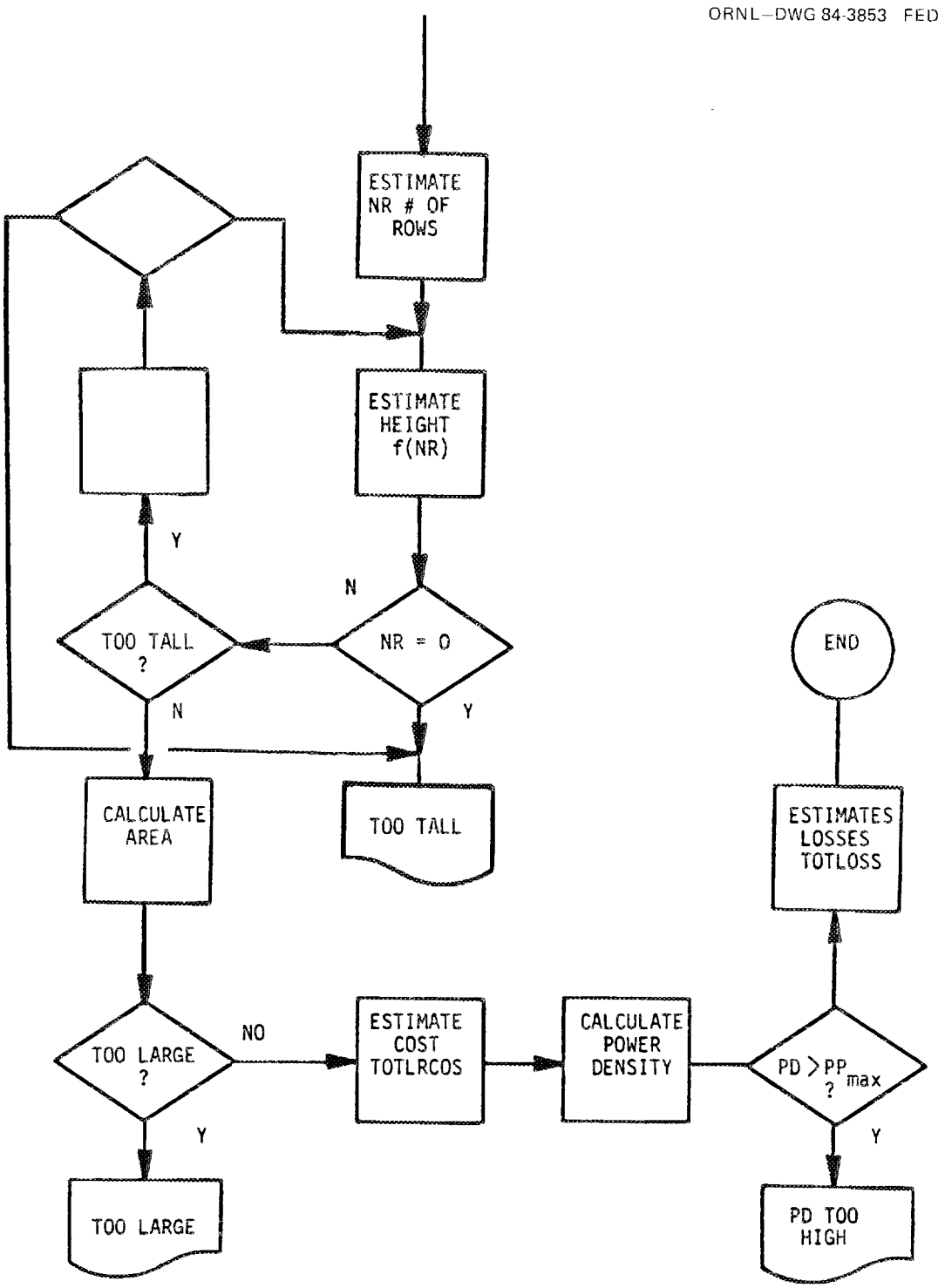

Fig. 31. Launcher subroutine flow diagram (continued).

ORNL-DWG 84-3854 FED

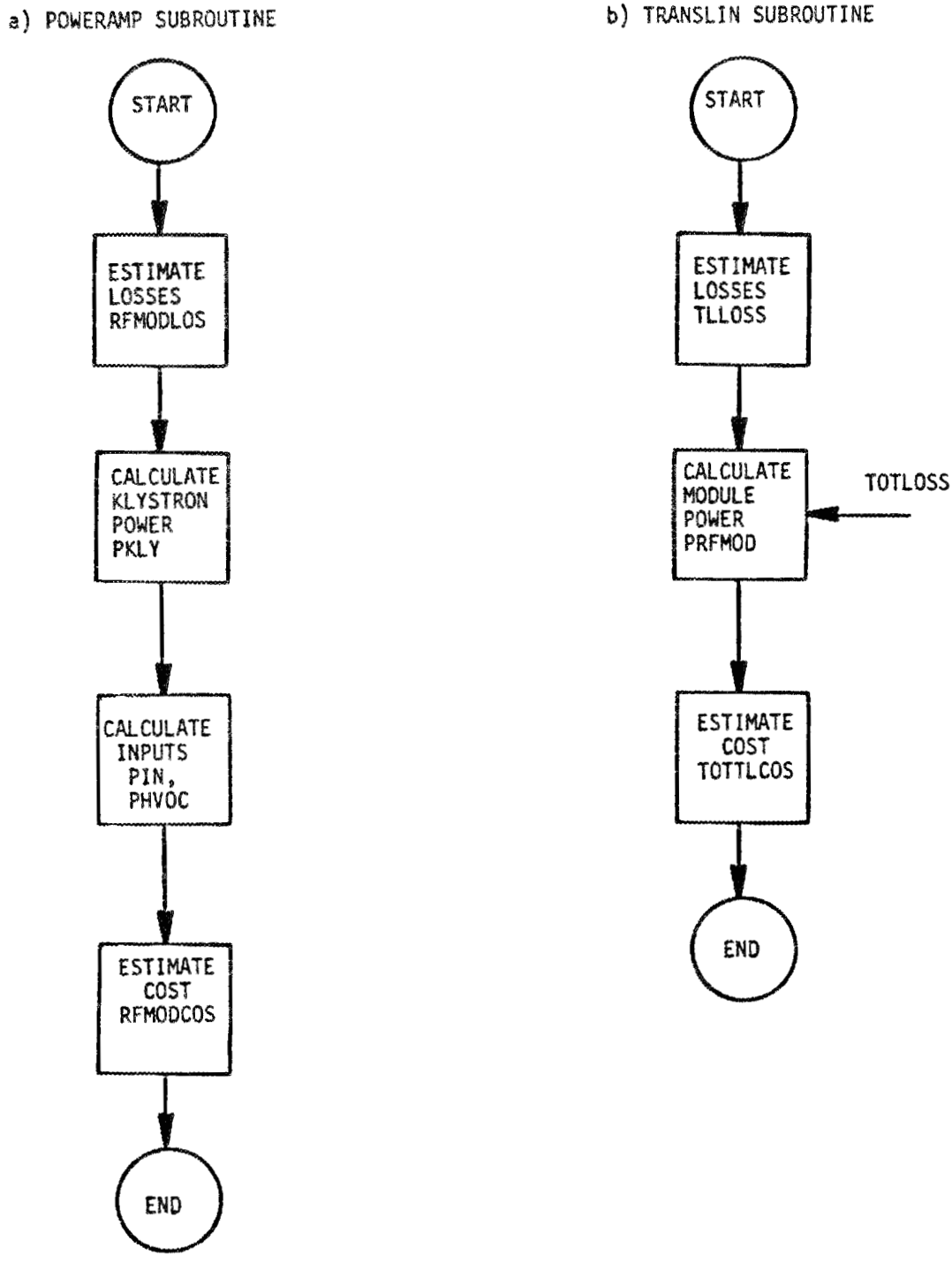

Fig. 32. Flow diagrams for the TRANSLIN and POWERAMP subroutines.

ORNL–DWG 84-3855 FED

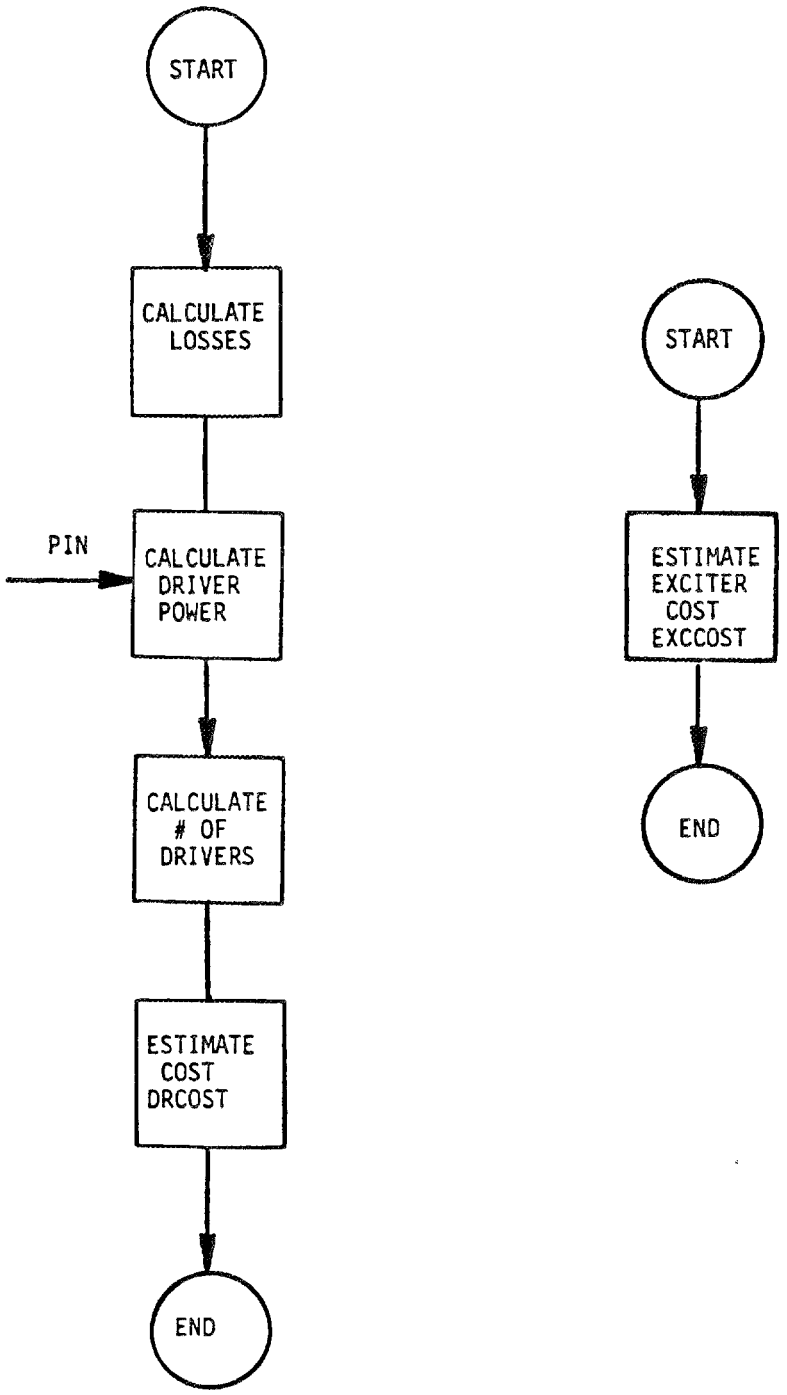

Fig. 33. Driver and exciter subroutine flowcharts.

ORNL-DWG 84-3856 FED

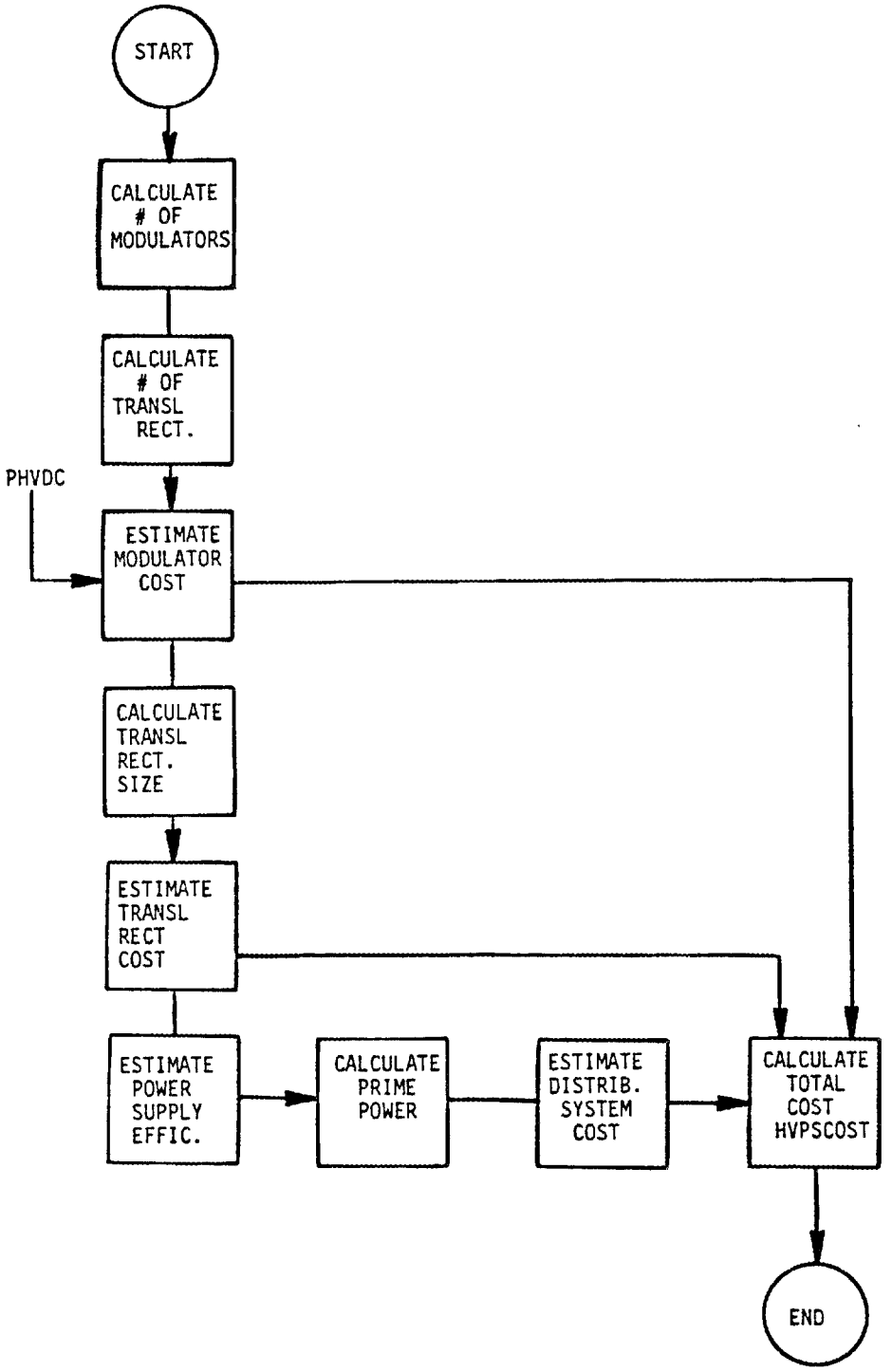

Fig. 34. HV OS subroutine flowchart.

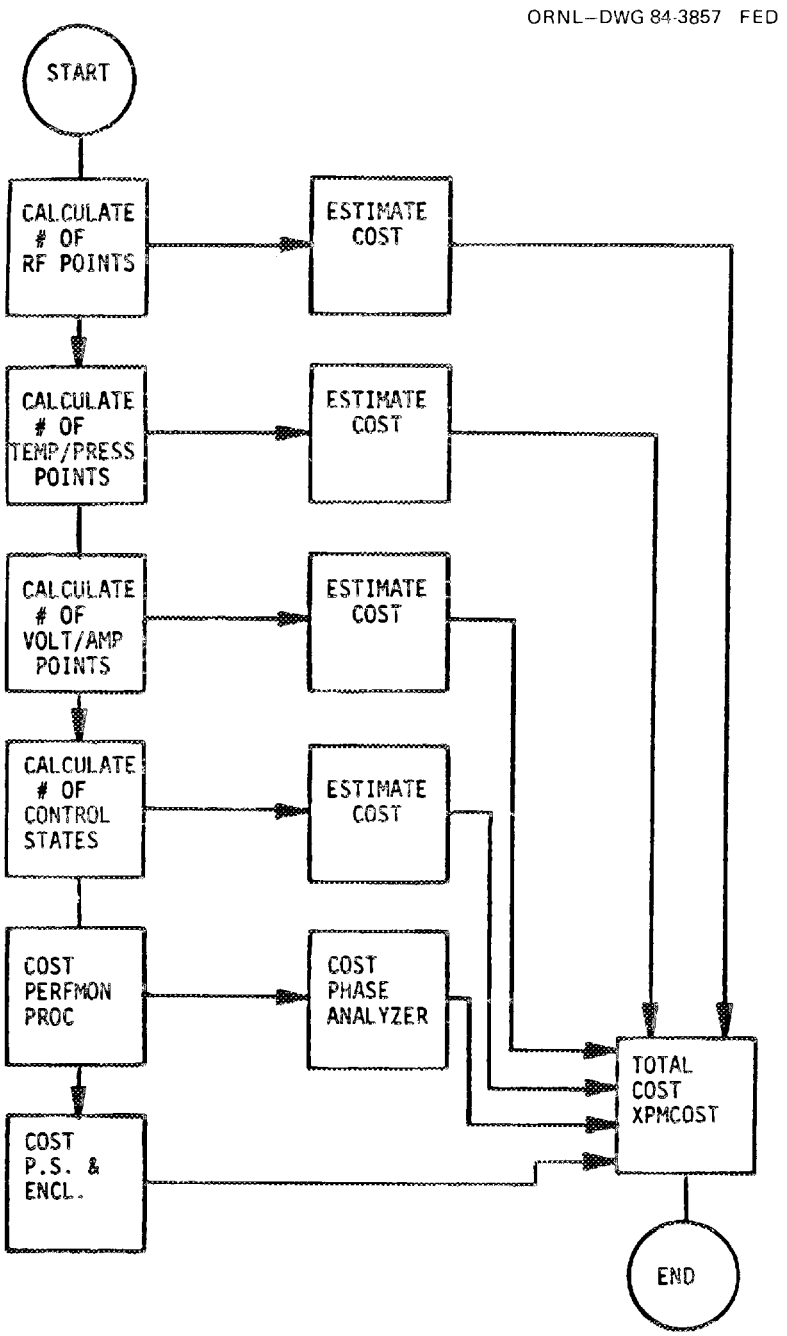

Fig. 35. PERFMON subroutine flowchart

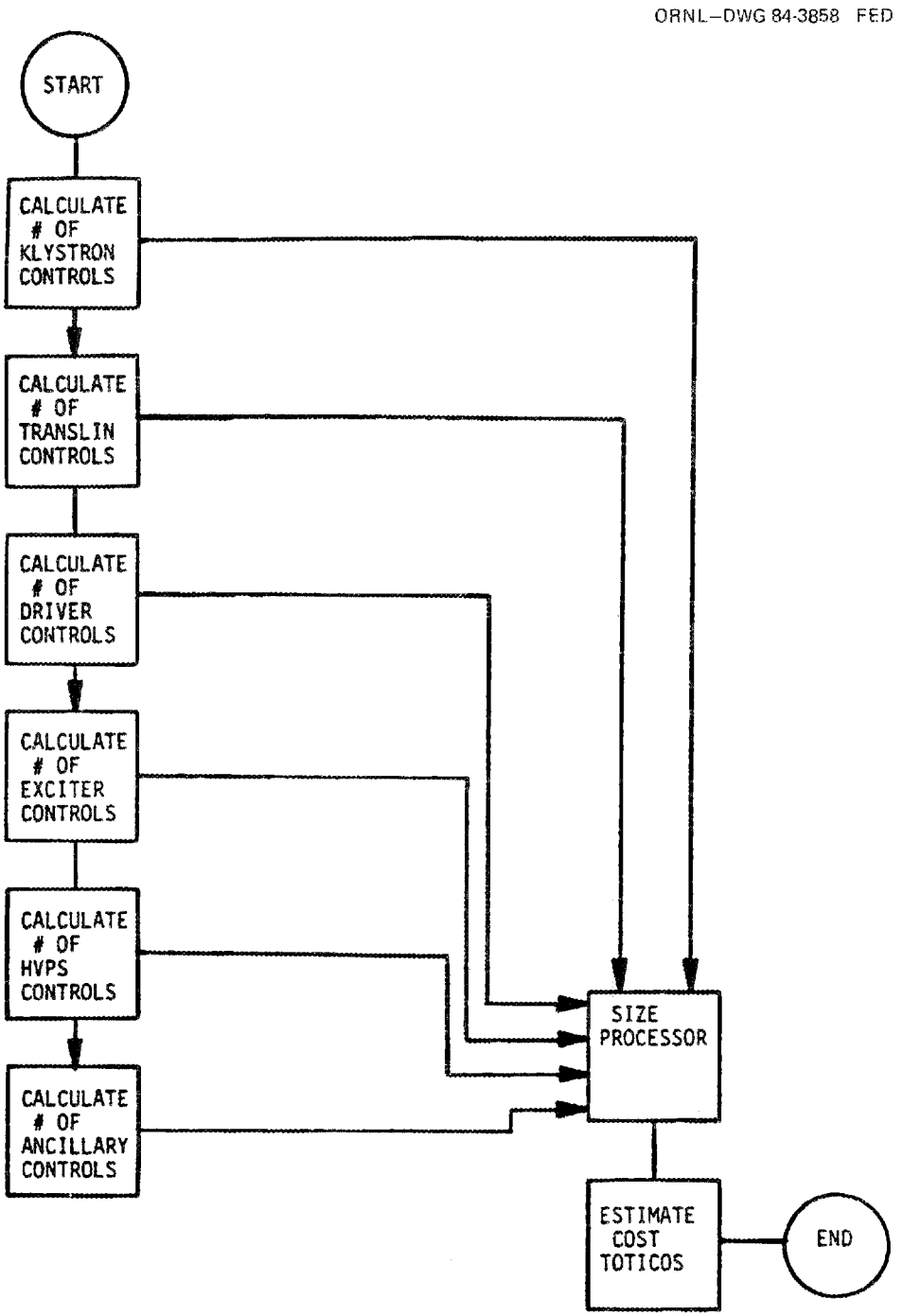

Fig. 36. I and C subroutine flowchart.

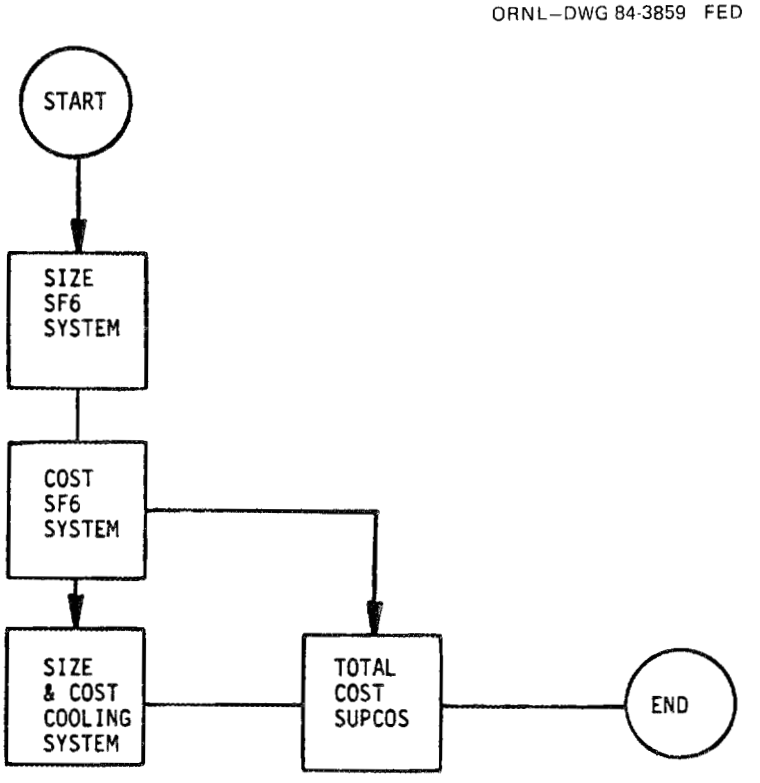

Fig. 37. SUPPORT subroutine flowchart.

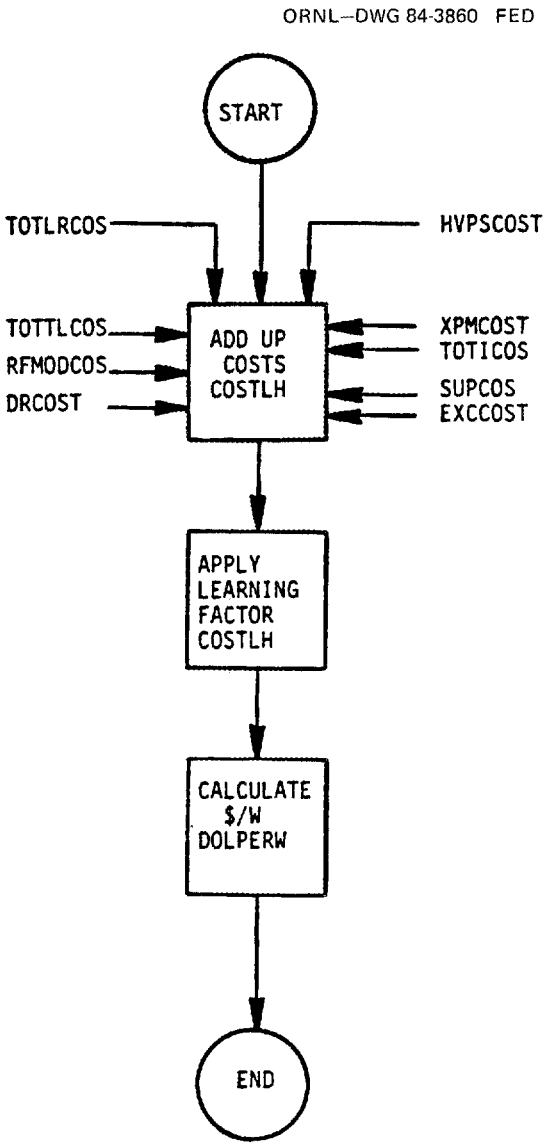

Fig. 38. WATCOST subroutine flowchart.

- Estimate the number of columns by a first guess of launcher port aspect ratio × square root of total number of subarrays.

Next, as can be seen from the flowchart, the width of a launcher that has NC columns is compared to the maximum width. If it fits, the routine goes on to a similar approach for determining the height of the launcher. However, if it is too wide, the number of columns is reduced by one and the width is checked for a fit again. Nine tries are allowed before leaving the loop and setting the "launcher is too wide" flag. Of course, if the value of NC goes to zero (case in which the port width is less than a subarray wide), then the flag is also set. After the code estimates the height, there is a final check on area before estimating the cost. Each component in the launcher has an assumed cost. Following the costing, there is a calculation of the power density in the waveguide and a comparison with the specified maximum. If this check is passed, then the losses are calculated.

2. TRANSLIN and POWERAMP subroutine: Figure 32 shows that these two subroutines are straightforward in their arrangement. Again, the component lineup in these two groups of equipment matches that of Fig. 24. In calculating the rf module power level, one module is assumed to drive NR*NP elements and is based on the calculated losses of the transmission line components. The klystron power is determined after the losses are estimated for the tube's output circuit, since it must make up for these to achieve the required module power. Working with the assumed tube efficiency and component losses, the required dc and rf power inputs are estimated. The cost of the high power components (such as the tube and circulator) scale by the power output.

3. DRIVER and EXCITER subroutine: Figure 33 shows the flowchart for these subroutines. A redundant driver arrangement has been assumed where two solid state amplifiers are combined with a hybrid. The power output of this combination is set to supply the need drive level, including losses. The exciter subroutine is simply a cost estimate.

4. HVDCPS subroutine: The flow for this subroutine is given in Fig. 34. The number of modulator regulators is always equal to the number of klystrons and the number of transformer rectifiers is equal to the number of elements in a subarray. Using the dc power needs (from the rf power module) and a dollar-per-kilowatt figure, the cost of modulators is estimated. Knowing the efficiency of the regulator (based on the required regulating range), the transformer rectifer can be sized and costed. The overall power supply efficiency is estimated as the product of the transformer rectifier and modulator/regulator efficiencies. Now the prime power is calculated as (PHVDC/efficiency) × number of modulators. The overall system efficiency is given by PPLASMA/prime power. With the total prime power, the ac distribution system cost is estimated based on a dollar-per-watt figure. Finally, the costs are added with appropriate markups for bulk material and labor.

5. PERFMON subroutine: As can be seen from Fig. 35, this subroutine simply counts up the number of monitoring points and applies the appropriate dollars per point to estimate the cost. Two other items are added one for the performance monitor processor (sized based on number of monitoring points) and another for a phase analyzer. Costs are then added to obtain the total.

6. IANDC subroutine: This routine is very similar to that of the previous one (Fig. 36). In this case, the number of controls is estimated and the processor sized and costed.

7. SUPPORT subroutine: In this subroutine, the dielectric SF6 system is sized based on the lengths of transmission lines. The cooling system is sized based on the power dissipated, and the cost is scaled by the power raised to 0.75. Figure 37 shows the simple flowchart.

8. WATCOST subroutine: The flowchart for this subroutine is given in Fig. 38. First, there is a summation of all the costs from the previous subroutines. Second, a learning-curve factor is used to estimate the impact of building multiple systems. This algorithm is of the form

$$\text{FACLEARN} = A + \frac{B \cdot E^{-\lambda \cdot NP}}{(NP)} c \quad .$$

This assumes the volume of equipment is grossly proportional to the number of ports. The values of A, B, C, and λ are built into the code. The final calculation is dividing this adjusted cost by PPLASMA (the injected power) to get the unit cost in dollars per watt.

9. LHSPACE subroutine: There is no flow diagram for this subroutine. It uses a very simple algorithm which relates the facility space to injected power. Both outside and inside areas are estimated separately and then combined.

10. ENDIT subroutine: This completes the LHBH portion by writing the output file. There are formats and headings that tailor the output based on the ICDRV triggers generated in the rfh driver program.

Module Outputs

Table 21 gives the list of output variables. Table 22 shows sample output from the module execution.

NB MODULE

This module arranges major components, iterates the size of these components to meet the required performance, and estimates cost of a neutral beam injector. In the material that follows, the assumptions and/or constraints, module inputs, flowcharts, and equations and module output will be described. The bulk of the material is on the fifteen subroutines which make up the module. Figure 39 (2 sheets) shows the overall flowchart for this module. The process begins with establishing the input parameters, both expert and non-expert. In subroutine INITIA, the expert input data are augmented with cross-section data generated by subroutines CROSS and SIGMA. The non-expert data in subroutine PARAM are supplemented by a calculation of drift duct length in the event none is specified in the input data file. In the DIVE6 subroutine, the effects of stray magnetic fields (CELLBH and CELLBV) on the beam shape and direction are calculated. At this point, the source current is calculated using an initial value of source size (AVϕ). Now the beamline efficiency is estimated. First, that of the acceleration grids in GRDEFF then the beam scrape-off in OPTDRI. If the number of these size sources required to meet the power requirements is not equal to the desired number, the source size is adjusted and the calculation repeated. Up to nine iterations on the source size are allowed to match the number of sources calculated with that specified in the input file. With the source current established, the pumping loads can be calculated in PUMP and the cryopump size iterated (up to nine times) until the reionization loss in the drift region is acceptable. In MONEY, the cost of major components is obtained by scaling the costs of the neutral beam injector for TFTR. The output file is written in TERM and messages are sent by FLAGS in the event that the number of sources, reionization loss, or pumping speed limit was not met.

Table 21. LHRH/LHCD output file from rfh module

Variable	Description
PLHCD	Power required for current drive (MW)
PPLASMA	Power required for bulk heating and current drive (MW)
TOTEFF	System efficiency
HVPPOW	Prime power (MW)
f	Frequency (GHz)
WGH	Waveguide height (cm)
PWRDEN	Calculated power density (kW/cm^2)
WGW	Width of waveguide (cm)
NP	Number of ports
NC	Number of columns
NR	Number of rows
EPSA	Elements per subarray
COSTLH	Cost of LH system ($ million)
DOLPERW	Unit cost

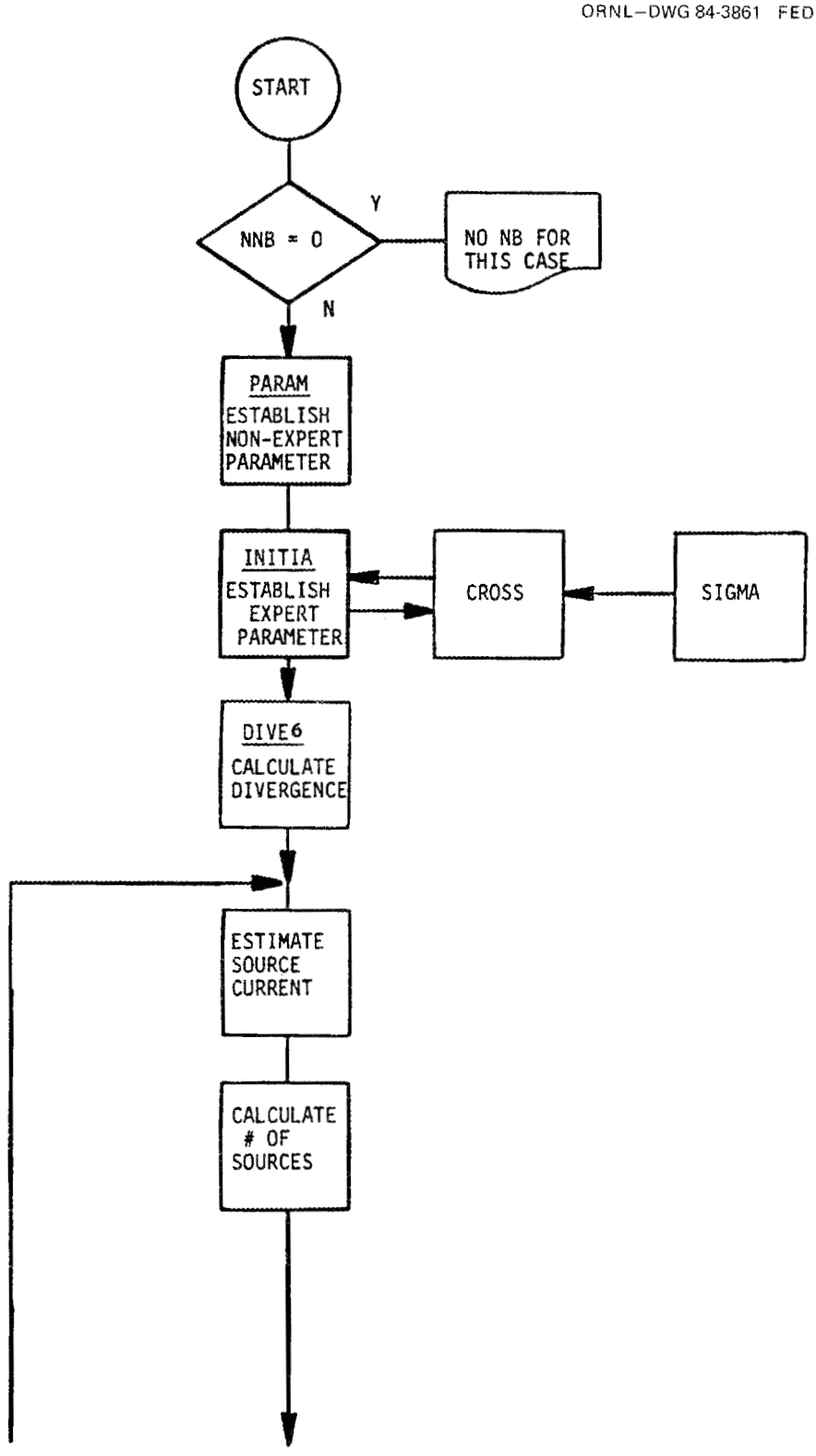

Fig. 39. NB module flowchart.

ORNL—DWG 84-3862 FED

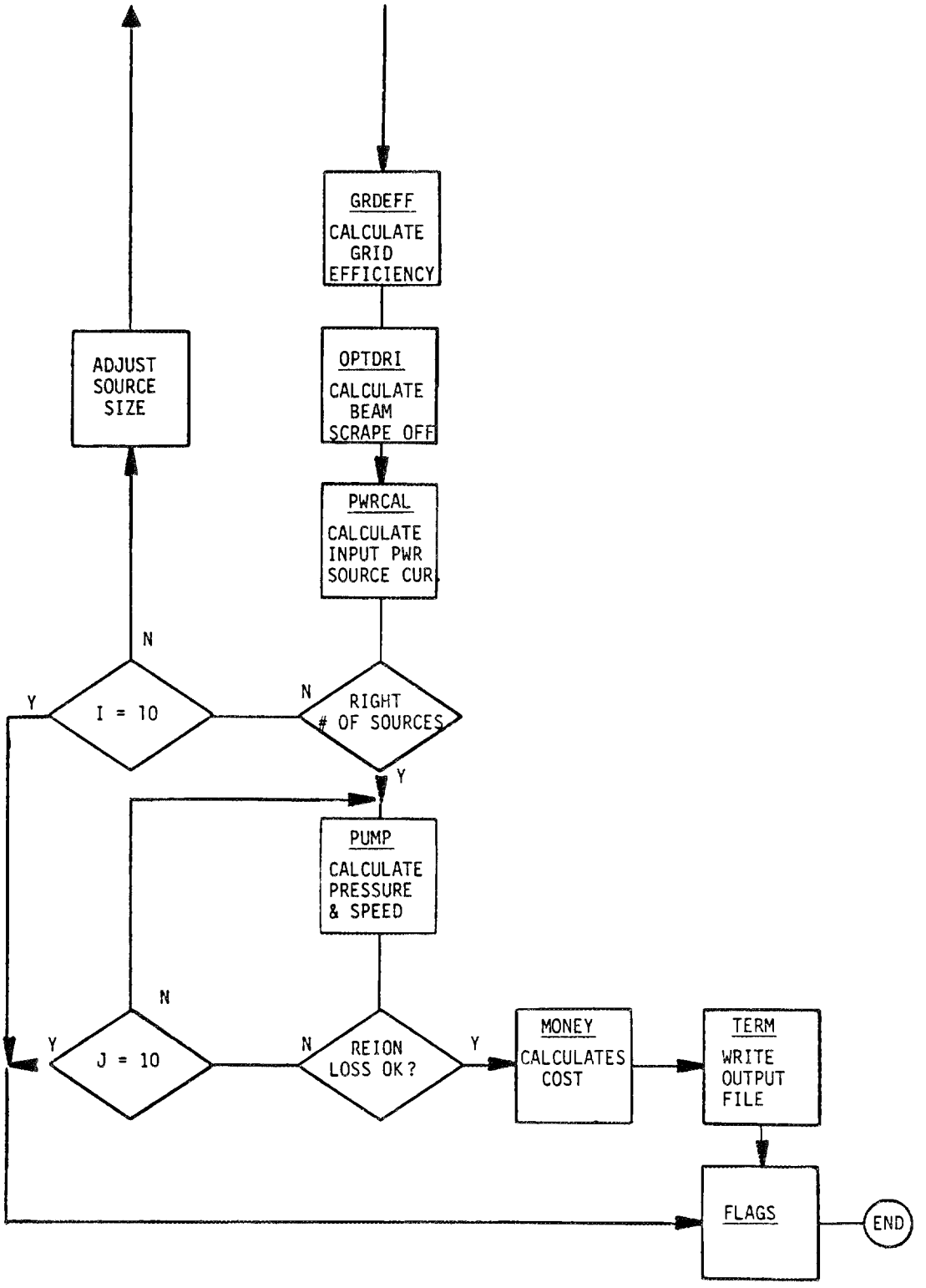

Fig. 39. NB module flowchart (continued).

MAJOR ASSUMPTIONS AND CONSTRAINTS

The neutral beam injector geometry is the major assumption for this module. Figure 40 shows a typical layout. A positive-ion-based beam is assumed with deuterium gas. There is a gas cell neutralizer. Cryopumps are used to pump the cold gas. There are many lesser assumptions, such as values chosen for parameters. These are too numerous to mention here but are listed in the code.

MODULE INPUTS

Figures 41 and 42 show computer listings of the input files used by the neutral beam code. In addition to the two words (ANGINJ and NNB) of the physics input data, there are the beam energy in keV (e_b) and beam power in NW (p_b) values, that come from the physics module. Figure 42 gives the balance of the inputs, both the non-expert and expert.

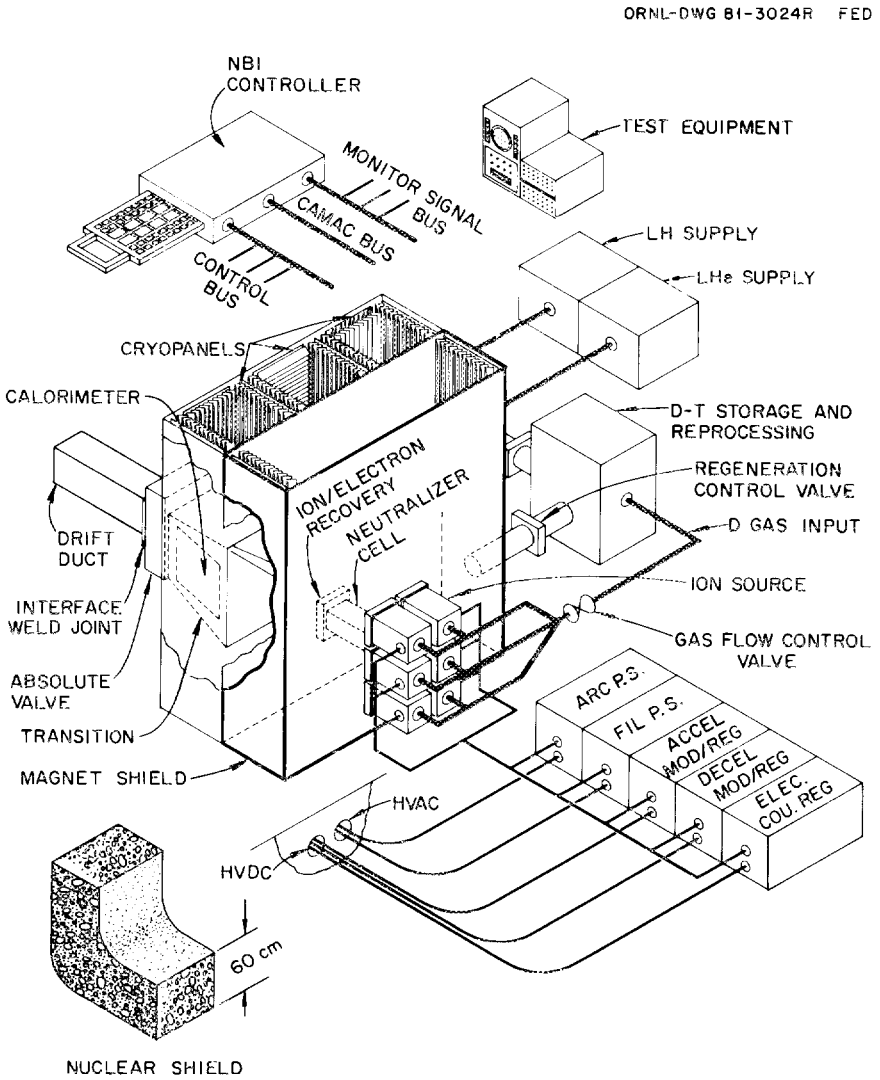

Fig. 40. Neutral beam injector system.

ORNL–DWG 84-3864 FED

```
*****************************************************************
***** physics input data
*  a            plasma minor radius                                m
*  anginj       neutral beam injection angle                       degree
*  ar           aspect ratio                                       --
*  beta         beta                                               --
*  bmax         field strengh at the tf coil                       t
*               (if 0, value is calculated)
*  bt           field strengh on axis                              t
*               (value is calculated if bmax unequal 0.)
*  ebpg         beta poloidal/aspect ratio                         --
*  gamma        resistance volt-sec multiplier for rf startup      --
*  iopt         iteration option on burn time                      --
*               (iopt=0, no iteration. input burn time is used.
*                iopt=1, iteration on aspect ratio to obtain
*                input value of burn time.  iopt=2, maximun
*                calculated burn time is used for input value
*                of aspect ratio)
*  jopt         iteration option on ebpg                           --
*               (jopt=1, input value of ebpg is used.  jopt=0,
*                input value of ebpg is a first guess)
*  li           plasma internal inductivity                        --
*  nnb          number of neutral beams                            --
*  misn         option for marginal ignition
*                (if misn=1, plasma minor radius is varied until
*                marginal ignition is achieved)
*  plshap       plasma triangularity                               --
*  q            safety factor                                      --
*  rf           rf assisted startup (1=yes, 0=no)                  --
*  ripple       ripple at plasma edge                              %
*  scrapl       scrapeoff layer                                    m
*  kappa        plasma elongation                                  --
*  tbeam        startup heating duration                           sec
*  tburn        burn time                                          sec
*  te           plasma electron temperature                        kev
*  ti           plasma ion temperature                             kev
*  tohs         oh solenoid swing time                             sec
*  tonch        plasma quench time                                 sec
*  tramp        oh ramp time                                       sec
*  z            impurity species                                   --
*  zeff         effective charge                                   --
*&phyin
plshap=.3 rf=1. nnb=0. anginj=35.
ar=3.85 a=1.3 kappa=1.6 bt=4.641 beta=.052 ti=10. te=10.
q=3.2 zeff=1.5 z=8. gamma=.505 li=1.5 scrapl=.2
ripple=0.83 tramp=30. tohs=6. tbeam=6.
tburn=100. tonch=10. iopt=0 bmax=0. jopt=1 ebpg=.515 misn=0
*&endphyin
```

Fig. 41. Neutral beam injection input in physics data.

ORNL–DWG 84-3880 FED

```
*********************************************************************
**&vsin
***** no volt-sec input is required by the program
**&endvsin
*********************************************************************
***** neutral beam input data
*  beamlh       beam height                                  cm
*  beamll       beam length                                  cm
*  beamlw       beam width                                   cm
*  ductl        duct length (if zero, length will            cm
*                  be computed)
*  ductx        duct width                                   cm
*  ducty        duct height                                  cm
*  powfac       multiplier to adjust beam power from
*                  the value calculated in the physics
*                  module
**&nbin
beamll=790.  beamlw=600.  beamlh=800.
ductl=0.  ductx=100.  ducty=120.  powfac=0.912
*********************************************************************
***** additional neutral beam input data for experts
*  cellbh       horizontal stray field in neutralizer        gauss
*  cellbv       vertical stray field in neutralizer          gauss
*  celll        neutralizer length                           cm
*  dumpl        direct recovery/ion dump region              cm
*                  length
*  etadr        direct recovery current efficiency
*  etarei       reionization efficiency
*  hdivrg       1/e divergence in the horizontal             degrees
*                  direction
*  nh           number of sources horizontally in
*                  the source array
*  nv           number of sources vertically in the
*                  source array
*  pratio       ratio of the pumping speed in the
*                  neutralizer/dump chamber to the
*                  baffle conductance from that
*                  chamber
*  seph         horizontal separation between                cm
*                  sources
*  sepv         vertical separation between sources          cm
*  sratio       ratio of source vertical width to
*                  horizontal width
*  vdivrg       1/e divergence in the vertical  degrees
*                  direction
nh=2  nv=3  seph=100.  sepv=100.  sratio=2.  hdivrg=1.5  vdivrg=1.5
celll=200.  dumpl=100.  pratio=3.  cellbh=8.  cellbv=8.
etadr=0.6  etarei=0.99
**&endnbin
*********************************************************************
```

Fig. 42. Neutral beam injection input data.

MODULE FLOWCHARTS AND EQUATIONS

1. PARAM Subroutine. Originally, PARAM stood for the parameters and the non-expert common files that were initialized by reading the input file ETFIND (Fig. 43). For this version (integrated into the systems code) "USE _ _ _ _" statements provide the necessary inputs. This subroutine also calculates the drift duct and total beamline length if none has been specified. It uses the tokamak geometry (i.e., TF coil radius and thickness, shield thickness, etc.) and the injection angle to calculate the duct length DUCTL. The total beamline length is the duct length plus an assumed neutral beam injector box length of 6 m. An allowance of 2 m is made for valves and neutron shutter.

2. INITIA Subroutine. This subroutine was named for initializing the expert file by reading ETFXD (Fig. 44). In this version, the "USE" statement accomplishes this function. In addition to establishing the expert parameters in the common block, there are other parameters defined here. First, the accelerator grid parameters along with those of the direct recovery unit are defined. Next, the species mix, that is, the fraction of full half and third energy components from the ion source, are defined. Currently, these are 0.80, 0.12, and 0.08, respectively. The extracted current density is then given by

$$\text{curden} = a\ \varepsilon_b^{-c} \quad ,$$

where ε_b is the beam voltage and the values of a and c are empirical. At this point, subroutine CROSS is called. The objective of this subroutine is to obtain (1) cross sections (using subroutine SIGMA), (2) neutral fractions, and (3) emission coefficients.

3. CROSS Subroutine. Figure 45 shows the flowchart for this subroutine. This subroutine is called at the start of the program to obtain the appropriate cross sections from subroutine SIGMA for use in subroutines GRDEFF, DIVE6, PWRCAL, and PUMP. The way this operates is through use of a LABEL in the call statement.

ORNL-DWG 84-3865 FED

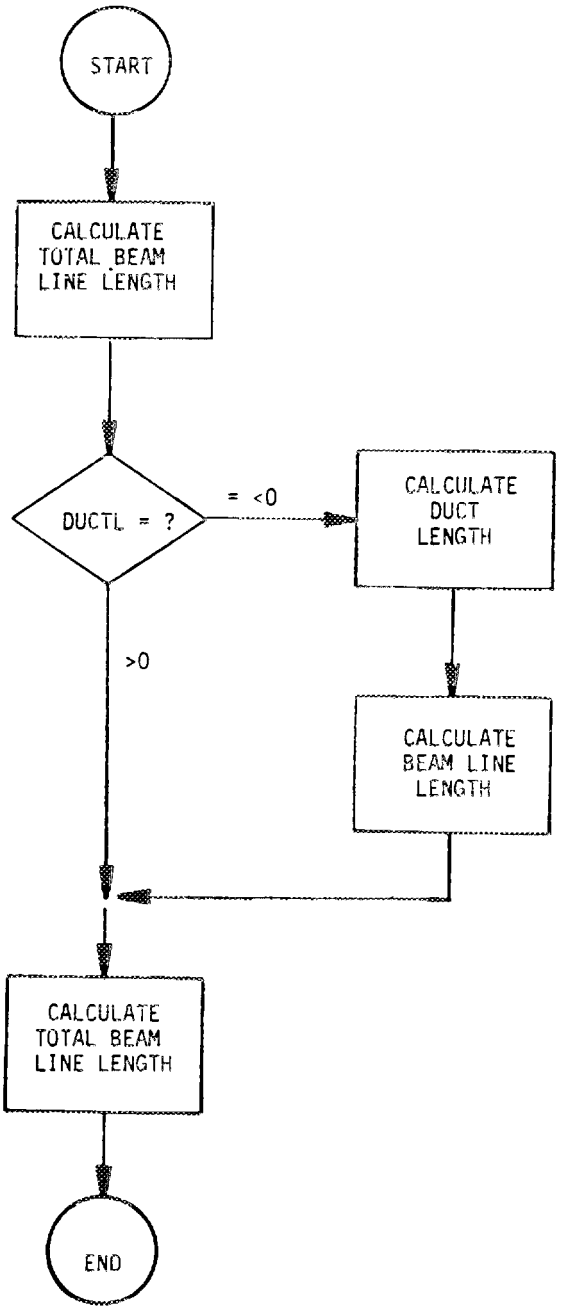

Fig. 43. PARAM subroutine flowchart.

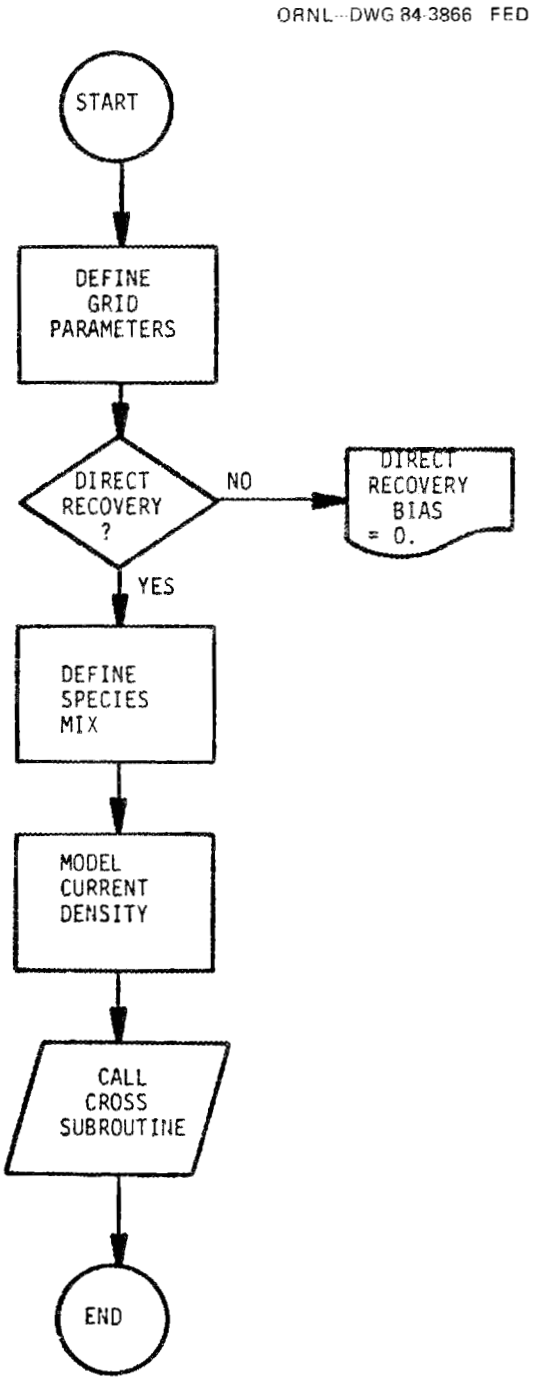

Fig. 44. INITIA subroutine flowchart.

ORNL–DWG 84-3867 FED

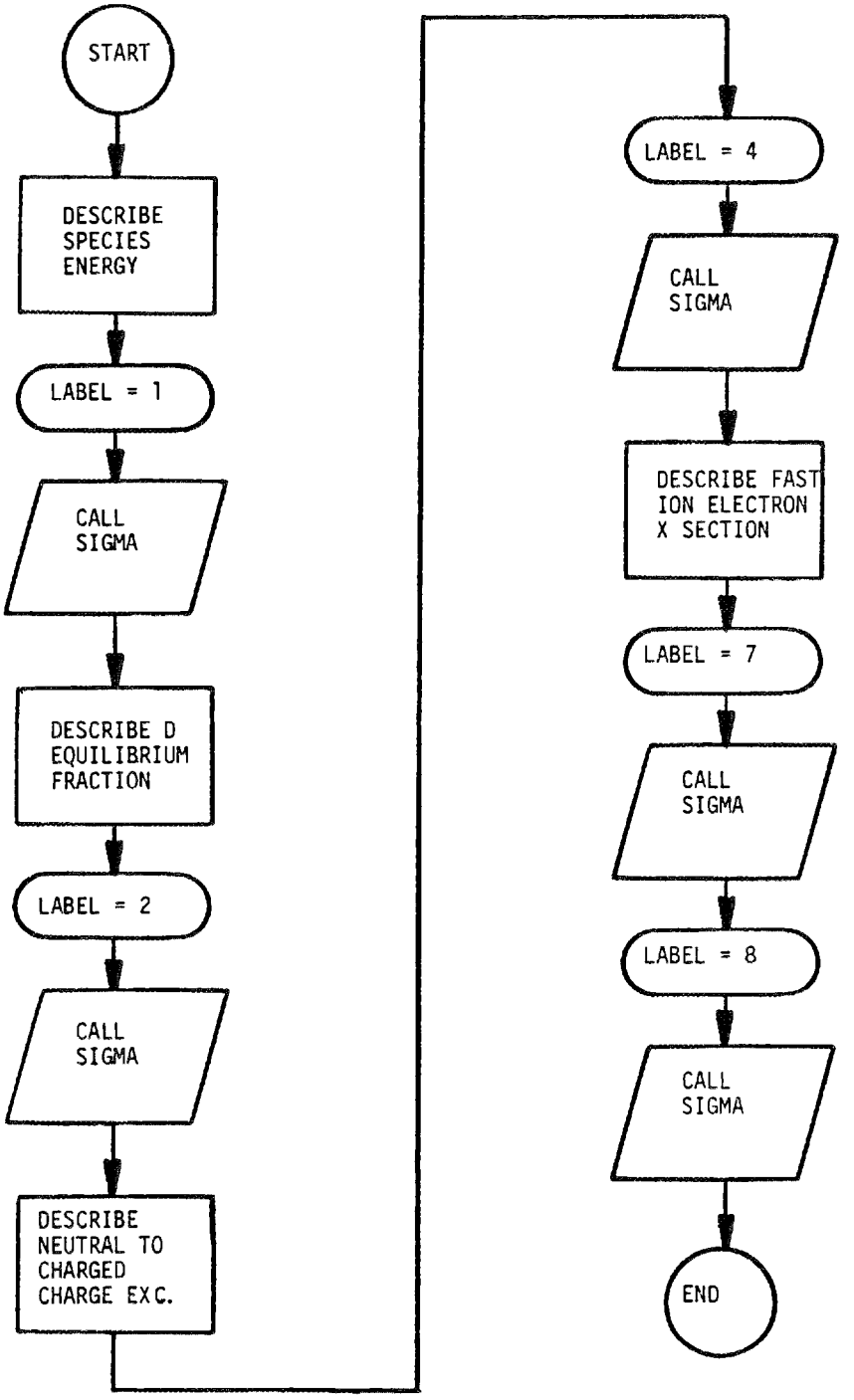

Fig. 45. Cross subroutine flowchart.

Call Sigma (LABEL, XSEXUN),

where LABEL is defined as:

label = 1 gives deuterium equilibrium neutral fractions,

label = 2 gives charge exchange cross sections (molecular target),

label = 3 gives reionization cross sections,

label = 4 gives fast ion electron production cross sections,

label = 5 gives negative ion electron loss cross sections,

label = 6 gives neutral fractions for d- into a cesium curtain,

label = 7 gives secondary emission coefficient for d+ onto molybdenum,

label = 8 gives charge exchange cross sections (atomic target).

Presently, labels 1, 2, 3, 7, and 8 are built in.

4. SIGMA Subroutine. The various cross sections are estimated based on a curve fit to Barnett's data. The cross sections are calculated in 1 kV steps over the appropriate ranges. A computed GO TO statement triggers off the LABEL. Each LABEL brings in a different set of coefficients to the functions to effect the fitted curve. The flowchart is shown in Fig. 46.

5. DIVE6 Subroutine. Figure 47 shows the flowchart for this subroutine. Here, the increase in divergence and shift in angle due to stray field in the neutralizer is calculated. The calculation is done once for each axis (re. vertical and horizontal) by the ICALC loop. After calculating the intrinsic beam divergence (T3) and gyrofrequency (ωo), the ion distribution is modeled as a Guassian with $\sigma = V_3$ (function of T3) and the variable V_{NB}. This loop generates a set of coefficients used in a coupled set of kinetic equations.[a] The net impact on the beam divergence and boresight is evaluated by a "running tally" generated in a "DO" loop. After completing the loop for the divergence in the vertical plane, the process is repeated for the horizontal divergence.

---

[a]As noted in the code comments, this modeling is based on work done by by J. R. Conrad reported in *J. Appl. Phys.* 51 (6), 2957 (1980).

ORNL–DWG 84-3868 FED

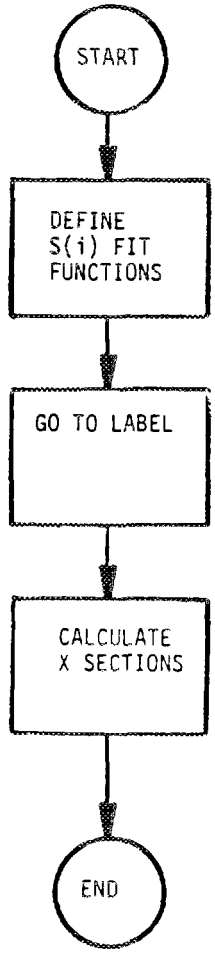

Fig. 46. SIGMA subroutine flowchart.

ORNL--DWG 84-3869 FED

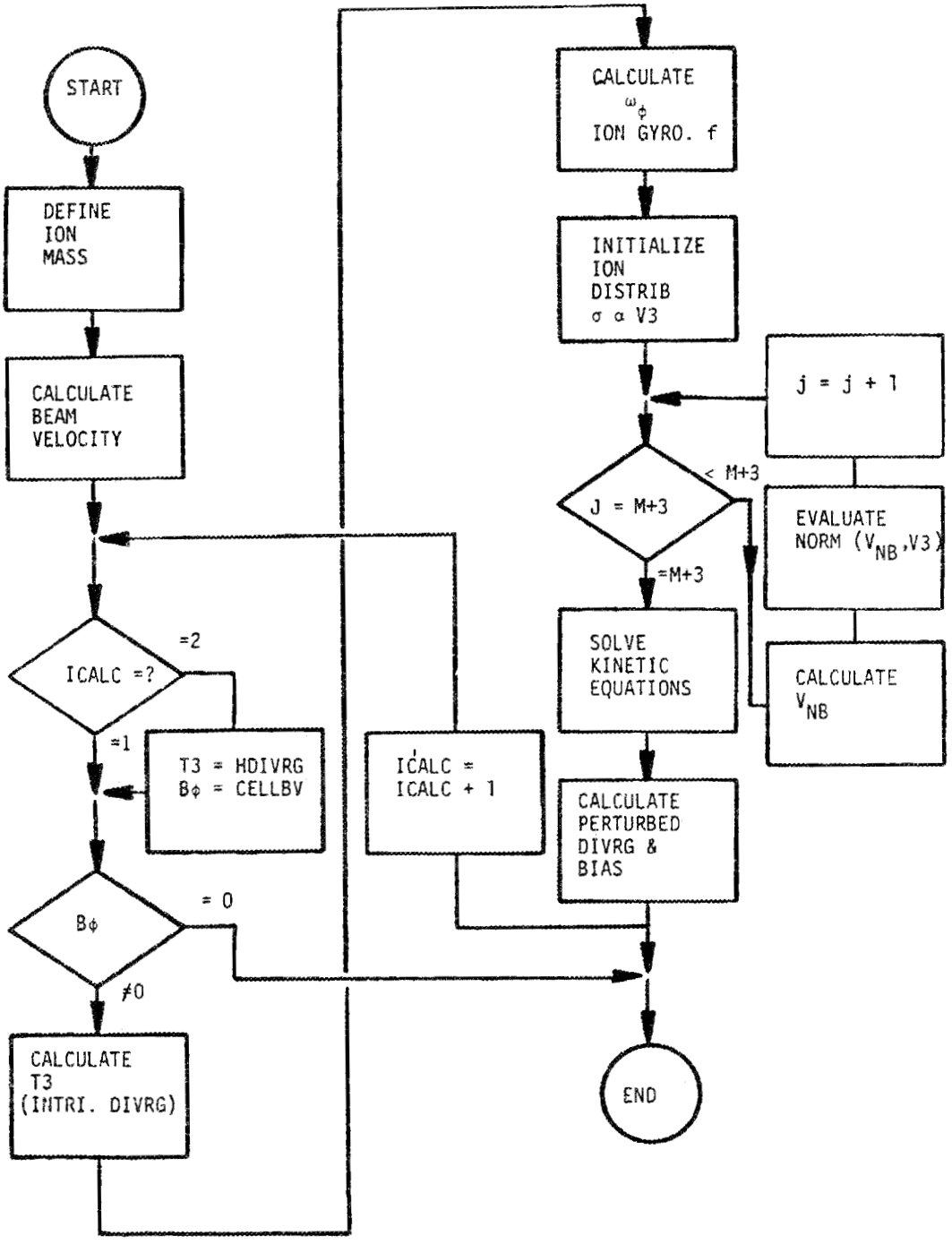

Fig. 47. DIVE6 subroutine flow chart.

6. GRDEFF Subroutine. This subroutine calculates the current and power losses due to beam — gas interactions in the grid region. It provides estimates of the current transmission efficiency for the grids (ETAG) and the power in fractions of i x v, invested in (1) back-streaming electrons (PBACKE), (2) ions to grid #2 (G2IP), and (3) ion to grid #3 (G3IP). Figure 48 shows the flowchart. The subroutine starts with definitions of the detail parameters of the grids (such as density, gap size and potentials) in the order shown in the flowchart. At this point, a "DO" loop is set up in which the position (X) within the grids establishes the Childs-Langmuir potential at that point. There are kV positions (beam voltage ÷ 1000). The loop starts at the 1-kV position and goes in the down-stream direction to the final kilovolt position. Using the values of Ci (LCKEV), cxmol (LCKEV), cxatom (LCKEV), SECEM (KVI) previously calculated in subroutine CROSS for LABELS 4, 2, 8 and 7, respectively, the currents and powers identified above are estimated. The variable LCKEV is the Childs-Langmuir potential at a particular position.

7. OPTDRI Subroutine. This subroutine is the optics performance estimation driver. It calls two subroutines — SRGEOM, which sets up the aperture geometry arrays, and OPTICS, which calculates the beam transmission. Figure 49 shows the flowchart. SRGEOM develops the geometry of a multiple-source beamline. The source arrangements are constrained to be on a grid with separations of SEPH in the horizontal and SEPV in the vertical. The subroutine uses the theory of similar triangles to calculate the aperture size in the horizontal and vertical planes. This aperture is located at the entrance to the drift duct and corresponds in size to that needed for a "zero-divergence" beam. An array of aperture sizes is generated — one for each source. Before returning to the OPTDRI subroutine, the distance to the entrance (LNEAR) and exit (LFAR) of the drift duct is calculated along with the beam crossover distances in the horizontal and vertical planes (fh = fv = distance to drift duct midpoint). At this point, a loop is initiated in which subroutine OPTICS is called twice, once for each end of the drift duct. This subroutine responds with a value for the transmission efficiency corresponding to

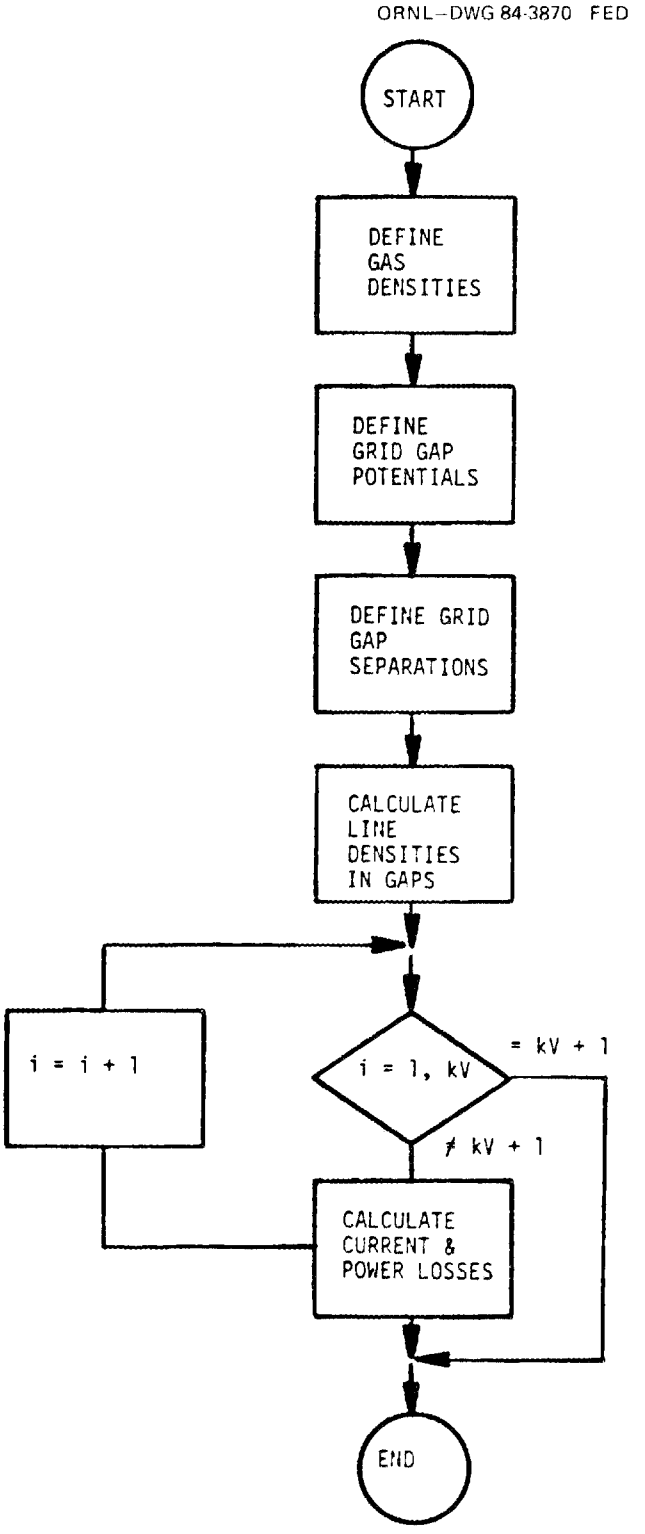

Fig. 48. GRDEFF subroutine flowchart.

ORNL–DWG 84-3871 FED

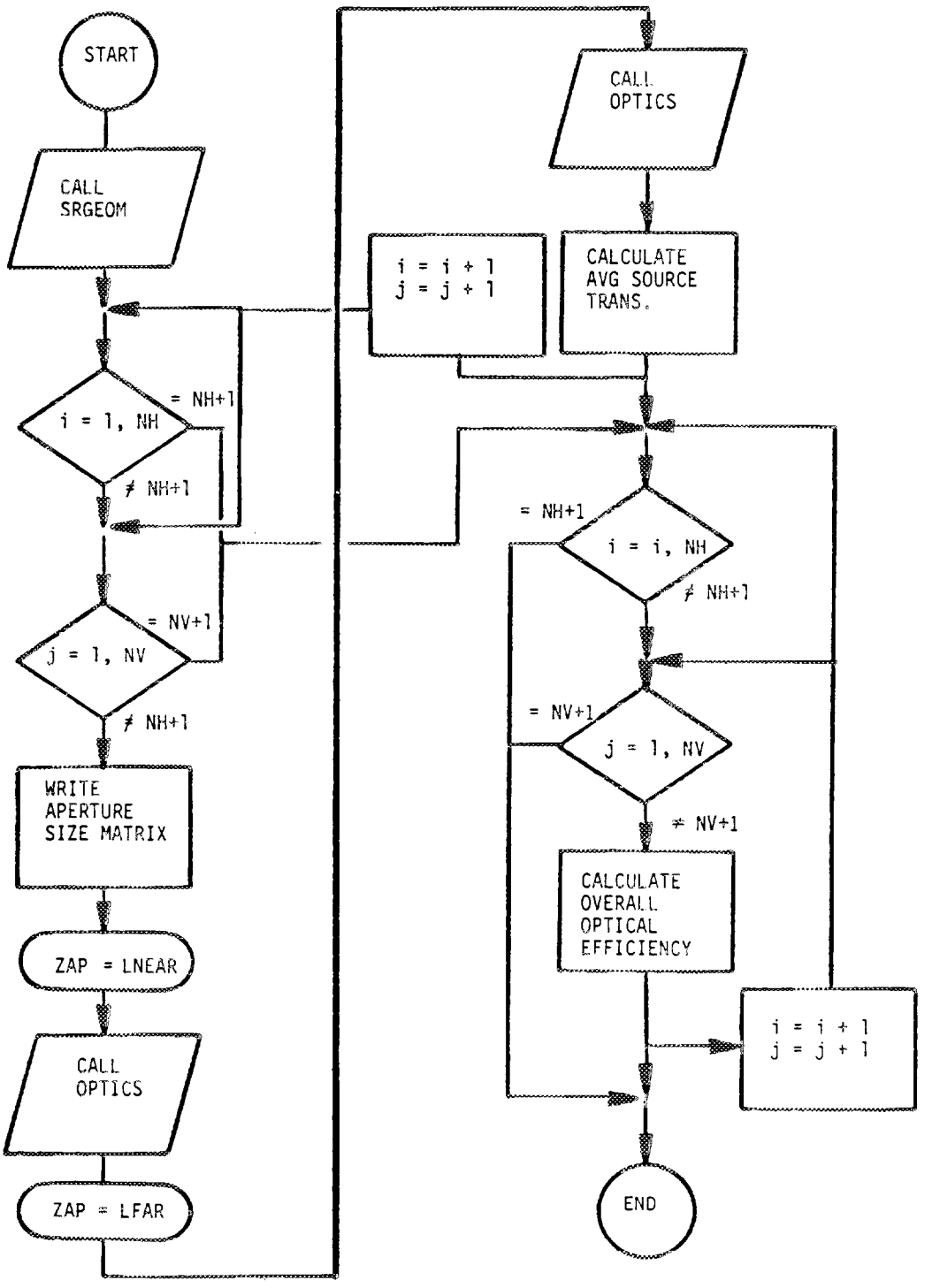

Fig. 49. OPTDRI subroutine flowchart.

the specified drift duct opening, the "zero-divergence" aperture and the beam divergence estimated previously. The loop steps through all sources. For each source, the average transmission efficiency is obtained from that of the entrance and exit efficiencies. Finally, another loop is established that averages the transmission efficiency across all sources to obtain the overall optical efficiency.

8. SRGEOM Subroutine. This subroutine takes the appropriate source and drift duct geometry and creates the arrays dh and dv, which contain the aperture sizes for calculation of beam transmission with multiple sources (Fig. 50). A technique of similar right triangles is used (Fig. 51). The first triangle is formed by SEPV (side opposite) and fv (side adjacent), while the second is formed by dv and DUCTL/2. In Fig. 50, the first double "DO" loop puts the source location into an array. The second double loop calculates fv and fh for each source location. Before returning to subroutine OPTDRI, the distance to the entrance and exit of the drift duct is calculated along with the distance to the beam crossover point.

9. OPTICS Subroutine. This subprogram calculates the fraction of beam power passing through a hole size of $2X\phi$ by $2Y\phi$ (Fig. 52). The beam shape is modeled as a bi-variant Guassian. The power density then becomes a function containing error functions:

$$\mathrm{TRAN} \propto [\mathrm{erf}(a-x) + \mathrm{erf}(a+x)] \times [\mathrm{erf}(b-y) + \mathrm{erf}(b+y)] \quad .$$

The balance of the subprogram is concerned with evaluating the constants from the geometry and parameters of the beamline. Plugging into the power density function gives the power transmission efficiency.

10. PWRCAL Subroutine. In this subroutine, the powers (prime, full, half, and third) are calculated, if not specified. The routine is set up to look for the specified input power and adapt. The values of PNTOT (total neutral power) and PNFULL (full energy power) are compared (Fig. 53). It is assumed that the power will be specified in terms of either PNTOT or PNFULL. The ion current leaving the extraction system

ORNL DWG 84-3872 FED

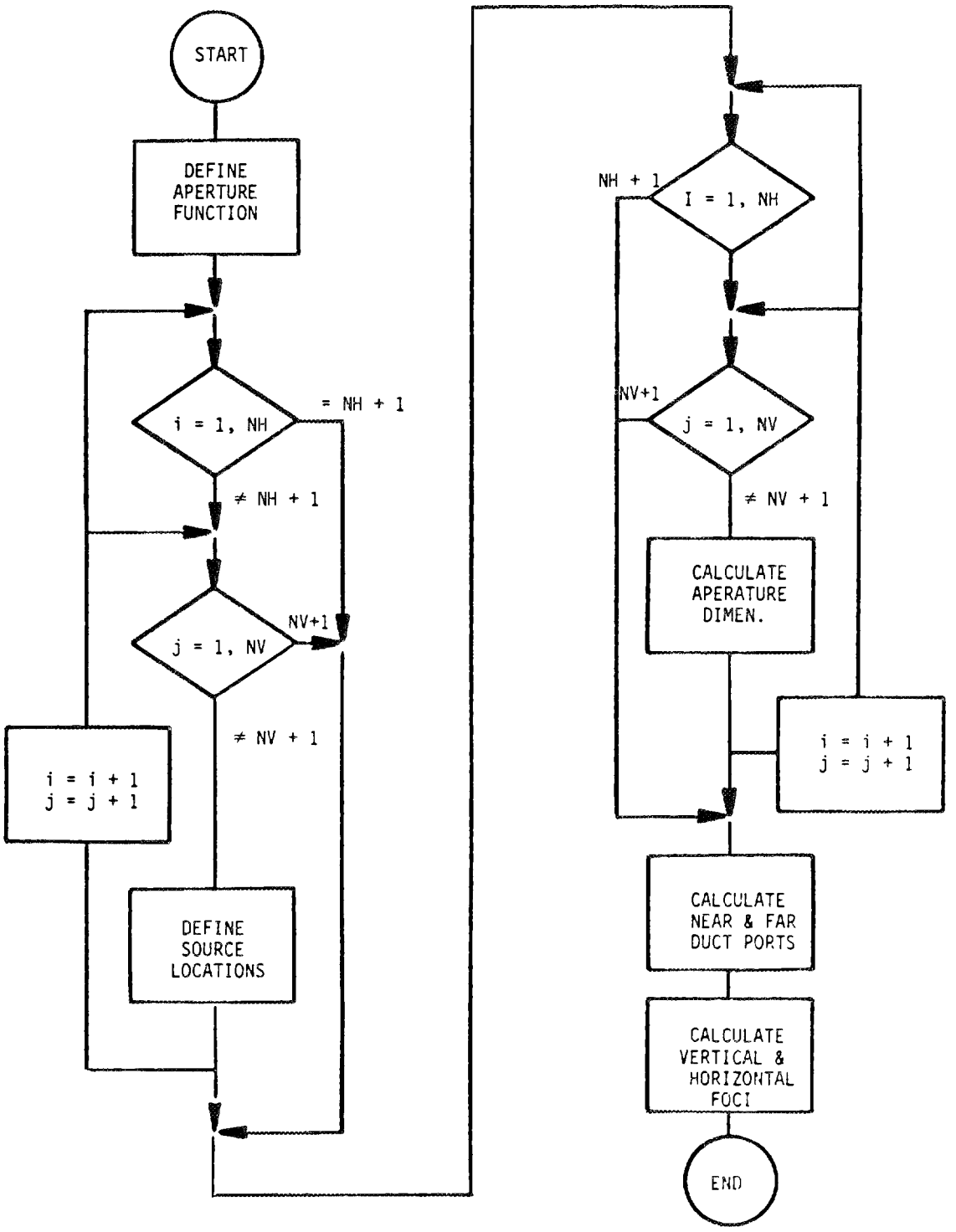

Fig. 50. SRGEOM subroutine flowchart.

ORNL–DWG 84-3873 FED

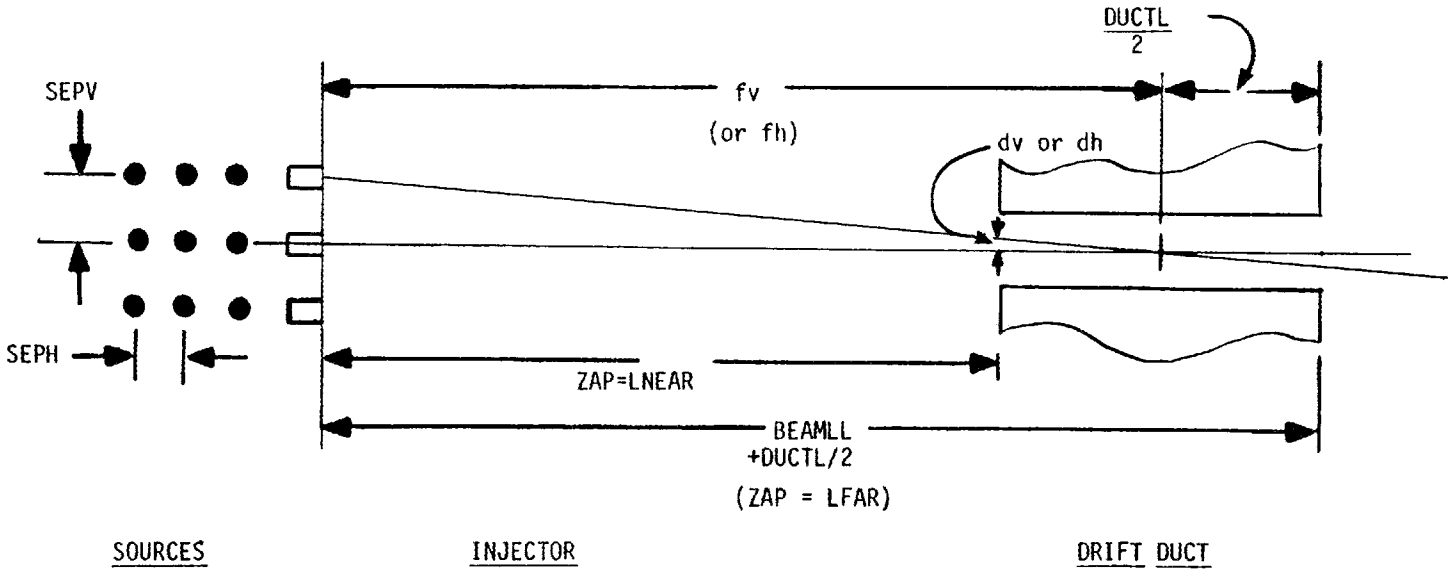

Fig. 51 Source drift duct geometry.

ORNL–DWG 84-3874 FED

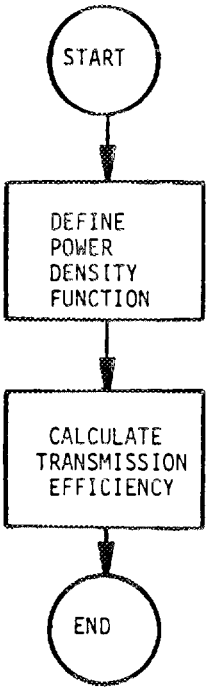

Fig. 52. OPTICS subroutine flowchart.

ORNL-DWG 84-3875 FED

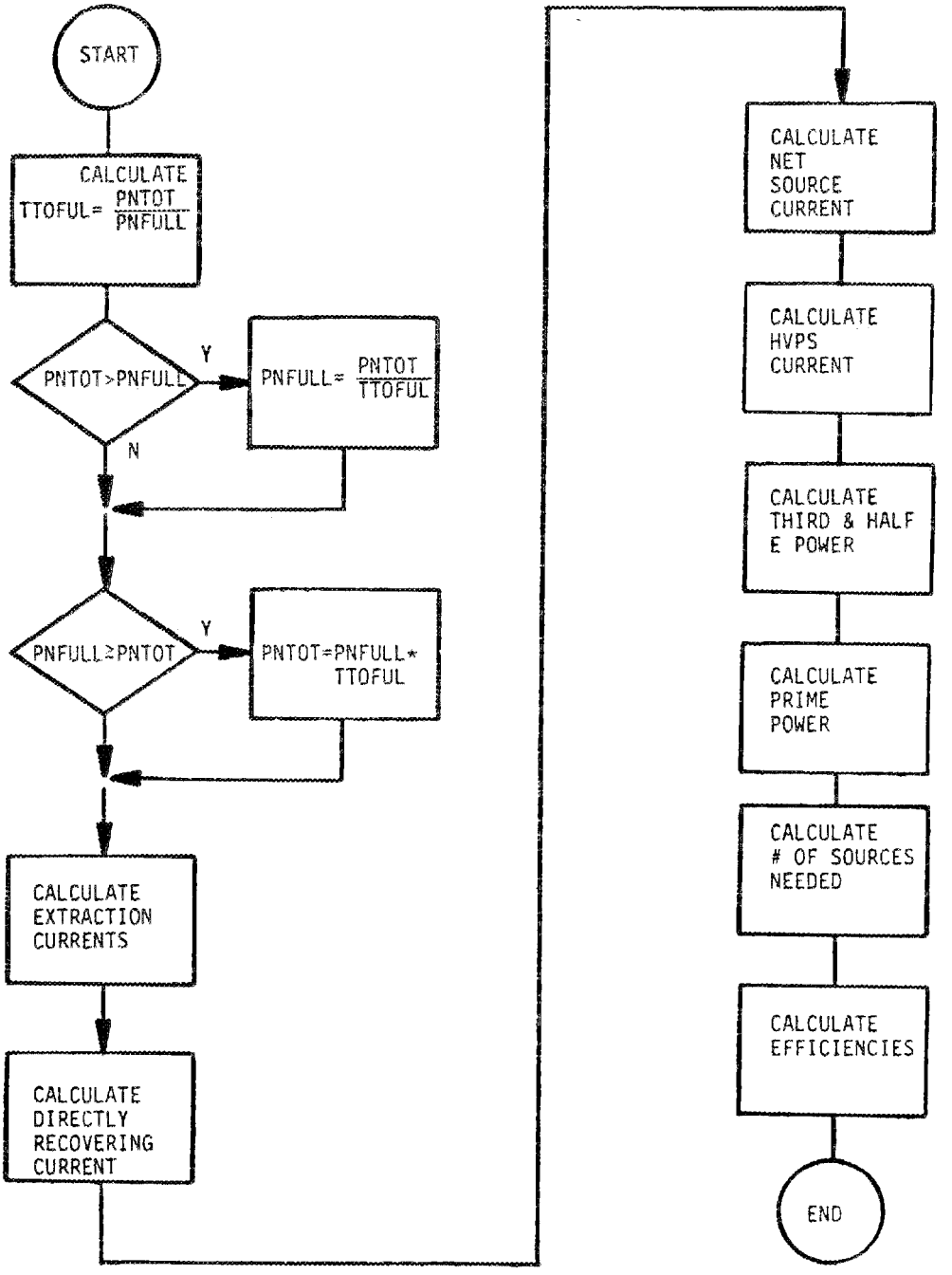

Fig. 53. PWRCAL subroutine flowchart.

can now be calculated using the efficiency numbers for reionization and optics and the species fraction and neutral fractions:

$$I = \frac{PNFULL}{E_b} \cdot \frac{1}{XMIXI} \cdot \frac{1}{\eta REION.} \cdot \frac{1}{0.95 f\phi INfI} .$$

Next, the full energy current is calculated because the direct recovery current is obtained from the full energy component only. The power supply current is then the next current needed for the source. Other supply currents, such as power for the plasma source and direct recovery units, are added to the high voltage power input to obtain the prime power needed from the power supplies (approximate prime power from the power line). The number of sources required to meet the requested current and the number per beamline are easily obtained along with ratios of PNTOT to prime power and PNFULL to prime power. These ratios represent the total energy and full energy component efficiencies.

By referring to either Fig. 39 or the code in the main driver, it will be noted that the desired number of sources is compared to the calculated number of sources in PWRCAL. If they match, subroutine PUMP is called; if not, counter ITER1 is indexed up by one and the new count compared to a value of 9. If ITER1 is greater than 9, PUMP is called and the program continues. However, when subroutine FLAGS is called, a message readout is triggered (by ITER1 over 9) that states that the desired number of sources could not be met. If ITER1 is less than 9, the source vertical half-size is adjusted based on the ratio of desired-to-calculated number of sources, and the GRDEFF, OPTD1, and PWRCAL subroutines are run again.

11. PUMP Subroutine. This subroutine sizes the pumping system. Both pumping speeds and beamline pressures are calculated. The beamline geometry is assumed to be a three-chamber configuration. The three chambers are (1) neutralizer/dump chamber, (2) drift chamber, and (3) drift duct. Figure 54 shows this subroutine's flowchart. Chambers 1 and 2 are separated by a baffle with holes where the neutral beam and some cold gas flow through. These holes are sized based on the beamline geometry and the need to not impact the optical efficiency. Cryogenic

ORNL–DWG 84-3876 FED

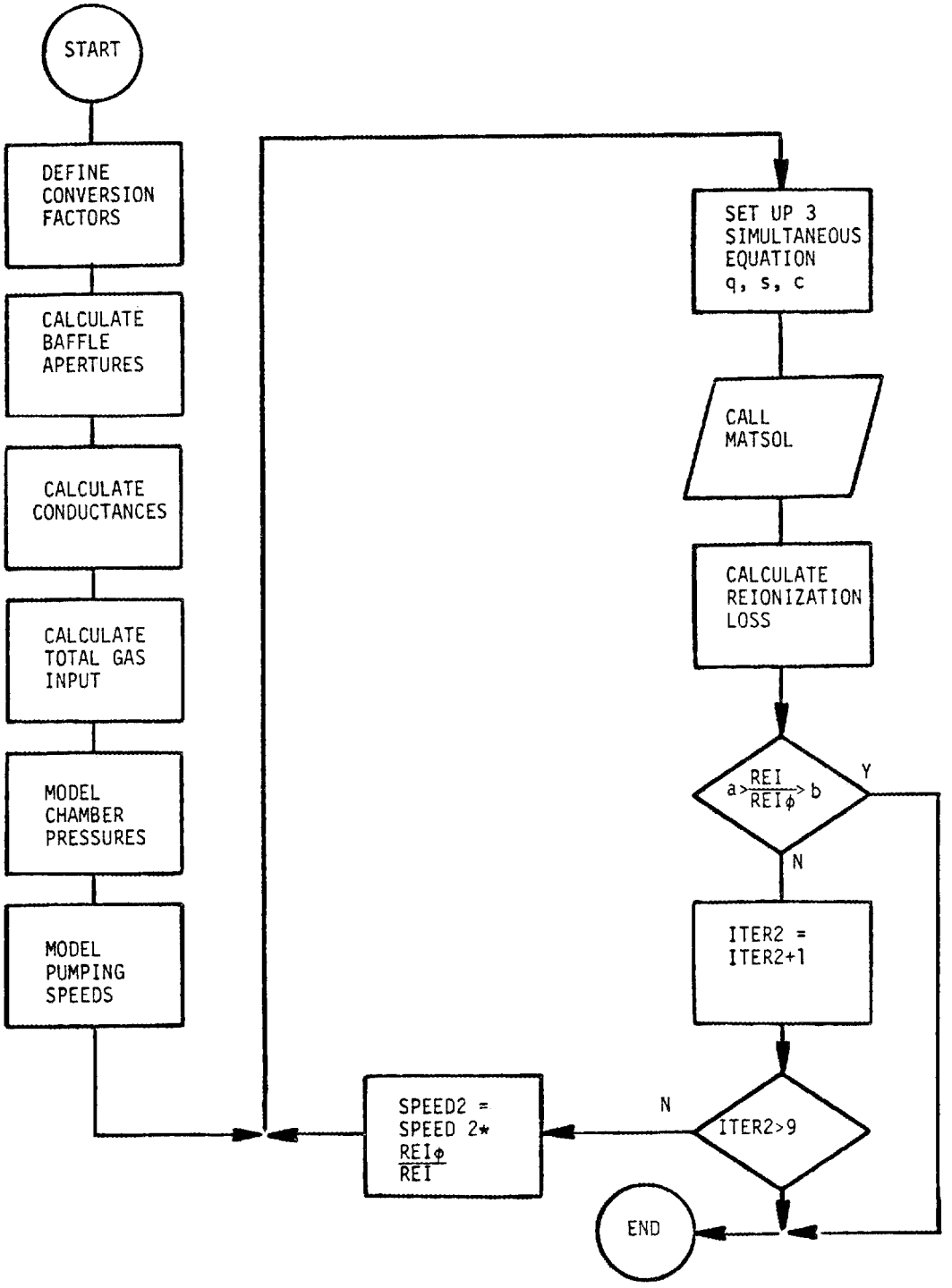

Fig. 54. PUMP subroutine flowchart.

pumps are assumed to be located in chambers 1 and 2, and the tokamak pressure is assumed to be zero. Gas flow, chamber pressure, and pump speed/conductances are modeled in preparation to solving simultaneous equations. The basic equation is

flow = speed times pressure ,

or

$$q = S \times P \quad .$$

Subroutine MATSOL is called to determine a compatible set of pressures in the three chambers. Now the reionization loss is calculated and compared to the desired value. If it is outside the specified range, the ITER2 counter is indexed by one and tested against a maximum value of 9. If it is less than 9, the pumping speed in the drift chamber is scaled based on the ratio of calculated-to-desired loss and MATSOL is called again. When the loss is in the acceptable range or the number of iterations is 10, the next subroutine is called. In the event that ITER2 is greater than 9, a flag will be triggered at the end of the program, indicating the reionization loss was not met.

12. MATSOL Subroutine. This subroutine uses a Gauss-Jordan reduction (G-JR) of "N" equations:

$$(S1+CA)P1 - CA \cdot P2 + 0 \cdot P3 - q1 = 0 \quad ,$$
$$-CA \cdot P1 + (CA+CD+S2)P2 - CD \cdot P3 - q2 = 0 \quad ,$$
$$0 \cdot P1 - CD \cdot P2 + 2 \cdot CD \cdot P3 - q3 = 0 \quad ,$$

where q, P, S, and C stand for gas flow, pressure, speed, and conductance. Subscripts indicate which chamber number or A for aperture and D for duct. The coefficients are written as amat (i, j):

$$AMAT(1,1)P1+AMAT(1,2)P2 + AMAT(1,3)P3 + AMAT(1,4) = 0 \quad ,$$
$$AMAT(2,1)P1 + AMAT(1,2)P2 + AMAT(1,3)P3 + AMAT(2,4) = 0 \quad ,$$
$$AMAT(3,1)P1 + AMAT(1,2)P2 + AMAT(1,3)P3 + AMAT(3,4) = 0 \quad .$$

Referring to Fig. 55, it can be seen that the first "DO" loop is the first step in the G-JR in which the first equation is divided by the P1 coefficient of that equation then subsequently multiplied by each of the P1 coefficients from the other equations and the resulting equation subtracted from it. A new set of equations is generated with the P1 coefficient AMAT (i,j) zero in all but the first equation AMAT (1,1). Subsequent steps reduce the number of terms in the equations until a variable is evaluated. The G-JR solution to linear equations technique can be found in numerous textbooks on mathematical methods.

13. MONEY Subroutine. Figure 56 shows the flowchart for this subroutine. The costs are estimated by scaling Tokamak Fusion Test Reactor (TFTR) costs based on performance parameters. Within the code, there are a series of comment statements that spell out the TFTR reference design. For each component, the dollars-per-performance unit is determined and used as a cost coefficient COEFXX. The scaling laws take into account such things as economy of scale. For example, the source cost scales by three-fourths of the total current and one-fourth the electron back streaming power, so the source cost is

SOCOST = COEFSO (0.75 ASORCE/70 + 0.25 PBACKE/0.0263) .

After the major components are costed in this manner, the costs are grouped by category (i.e., mechanical, electrical, and auxiliary). The final set of calculations is done in outputs, where the total and unit costs are determined.

14. TERM Subroutine. This subroutine writes the output to file. (Fig. 57). The output file is NBOUTDT and contains 23 words of data. (See "Module Outputs.")

15. FLAGS Subroutine. Figure 58 shows the flowchart for this subroutine. Four flags are possible. The first two are triggered by the iteration counters numbers 1 and 2. They indicate when the correct number of sources or reionization loss has not been met. The last two

ORNL–DWG 84-3877 FED

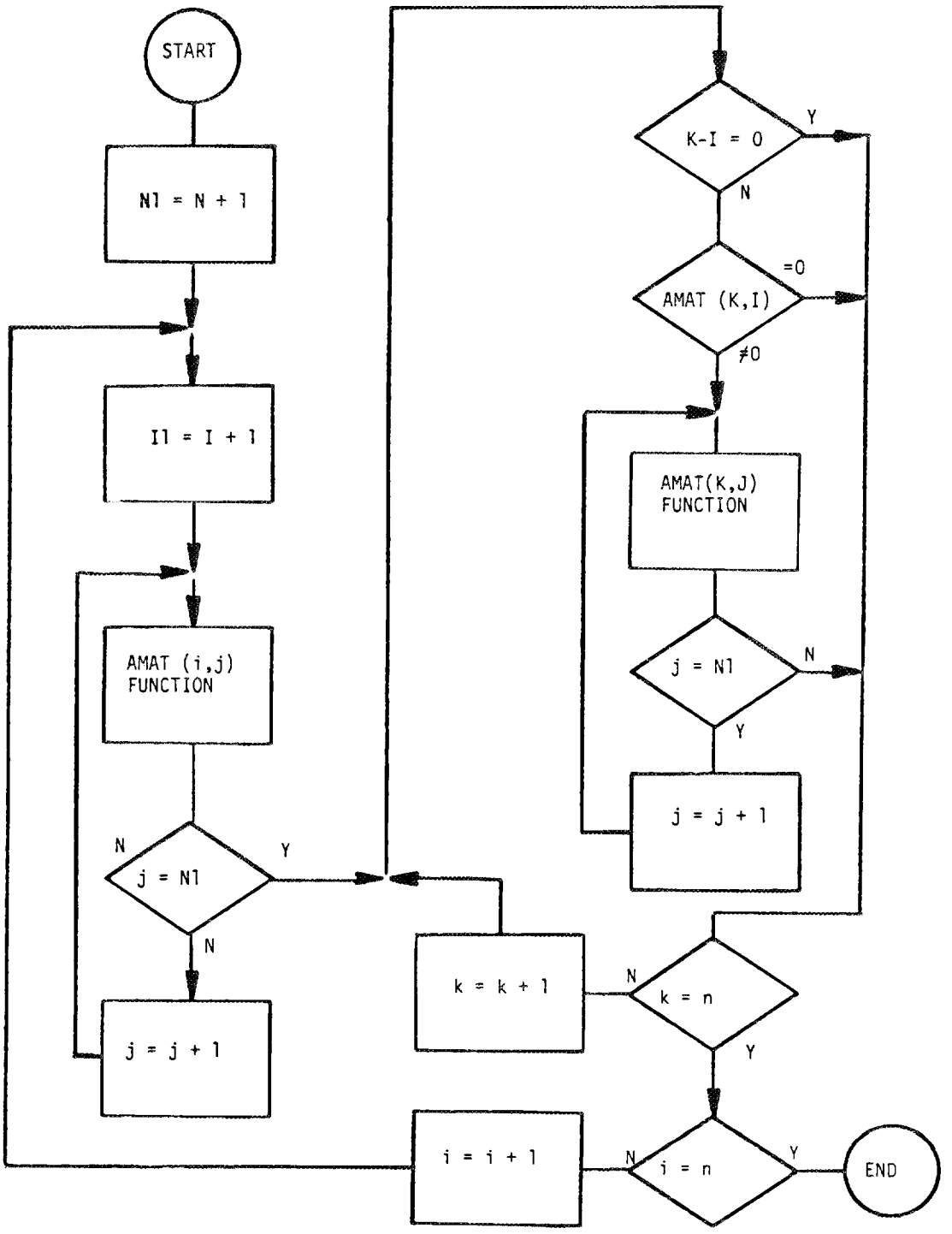

Fig. 55. MATSOL subroutine flowchart.

ORNL--DWG 84-3878 FED

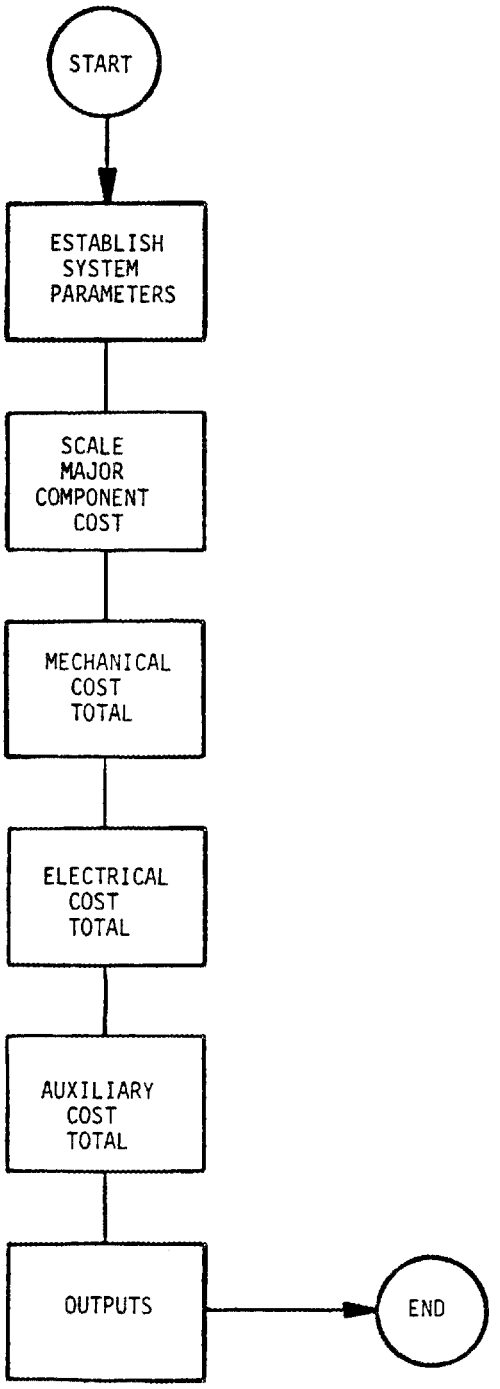

Fig. 56. MONEY subroutine flowchart.

Fig. 57. TERM subroutine flowchart.

ORNL-DWG 84-3879 FED

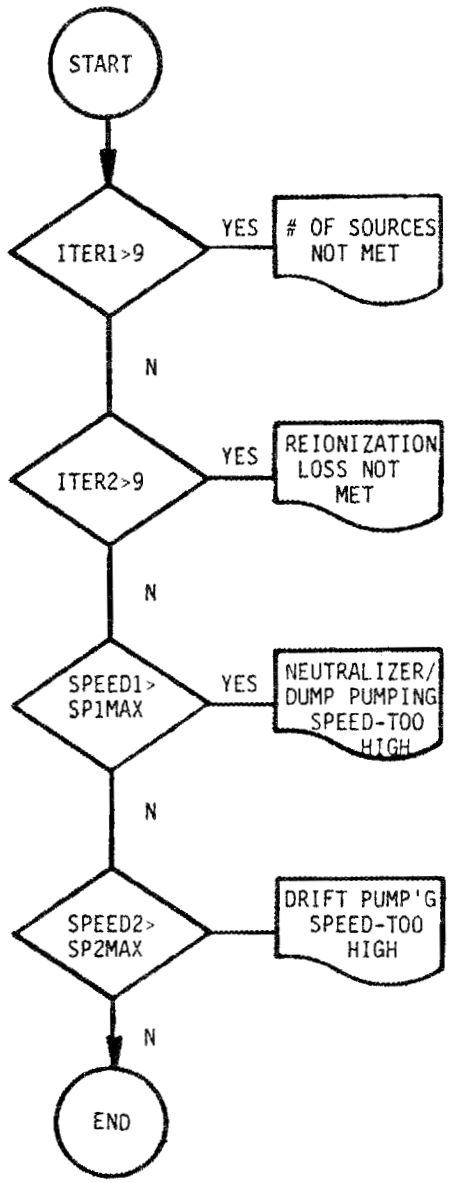

Fig. 58. FLAGS subroutine flowchart.

flags are for pumping speeds in the two chambers. The maximum attainable pumping speed SP-MAX for a given geometry is calculated in "PUMP". If this value is exceeded, the flag is written.

MODULE OUTPUTS

Figure 59 shows a typical output file (note: does not conform to the input files shown in Figs. 41 and 43). The full, half, and third energy powers correspond to the beam power for neutrals at eb, eb/2, and eb/3 keV energies. The dollars-per-watt figures correspond to direct capital cost dollars per watt injected. The energy fractions 0.8, 0.12, and 0.08 are assumed values of the species mix from the accelerator. "ETA" stands for efficiency.

ORNL-DWG 84-3863 FED

neutral beam

reg'd beam power (mw)	=	54.834	full energy fraction	=	0.800
power multiplier	=	0.912	half energy fraction	=	0.120
total beam power (mw)	=	50.009	third energy fraction	=	0.080
full energy power (mw)	=	32.494			
half energy power (mw)	=	9.903	eta (total)	=	0.407
third energy power (mw)	=	7.611	eta (full energy)	=	0.264
input power (mw)	=	122.867	etaopt (duct trans)	=	0.946
ductl (m)	=	3.555	duct width (m)	=	1.000
beaml (m)	=	7.764	duct height (m)	=	1.200
total length (m)	=	11.319	beam angle (deg)	=	35.000
number of beam	=	4	pressure (torr)	=	3.134e-06
sources/beam	=	6.001	speed (1/s)	=	5.589e+06
mechanical cost (m$)	=	39.577	source h/w horiz.(cm)	=	6.396
electrical cost (m$)	=	25.566	source h/w vert. (cm)	=	12.791
auxilaries cost (m$)	=	9.184			
total cost (m$)	=	74.327			
$/watt (total)	=	1.486	direct recovery eff.	=	0.600
$/watt (full)	=	2.287	beam energy (kev)	=	150.000

Fig. 59. Typical neutral beam injection output data file.

Table 22. Sample output

```
********************************** rftyp    **********************************


Preheat using ECRH

   injected power (mw)   =       1.00    efficiency                =       0.19
   input power (mw)      =       5.25    frequency (Ghz)           =    130.087
   cost (M$)             =       7.04    unit cost ($/watt)        =       7.04

Bulk heating using ICRH

   injected power (mw)   =      50.01    efficiency                =       0.55
   input power (mw)      =      90.76    frequency (Ghz)           =      0.028
   cost (M$)             =      63.63    unit cost ($/watt)        =       1.27


TOTAL RF SYSTEM COST ($M)  =        70.67
```

8. NEUTRAL BEAM/TF COIL INTERFACE

This program is based on principles of analytical geometry. It is designed to determine if geometric interference occurs between a neutral beam injector and the two adjacent TF coils.

The only user input parameters are the gap between the neutral beam injector and the TF coil to allow removal of the injector DGAP, the factor AFAC (used to locate the point where the neutral beam angle is measured), and THSNB (which represents the neutral beam unit shield thickness). The rest of input data are transferred internally from modules preceding this one.

For the case of no geometric interference, the output includes input parameters, required and available heights and widths, as well as the coordinates of intersection points between the torus wall and the injector. When either the width or height of the injector exceeds the available width or height between the two adjacent TF coils, a corresponding warning message is printed out along with input parameters.

This module also includes both subroutines YCAL and NBGSUB. Subroutine YCAL calculates the available height at a given location on the x-axis, and subroutine NBGSUB determines intersection points of the torus wall and the TF coil outer leg with the neutral beam injector.

BASIC EQUATIONS

Given locations of two adjacent TF coil outer legs $D'(X_{D'}, Z_{D'})$ and $E'(X_{E'}, Z_{E'})$, the position of the midpoint L (Fig. 60) is obtained from

$$X_L = \frac{1}{2} (X_{D'} + X_{E'}) \quad ,$$

and

$$Z_L = \frac{1}{2} (Z_{D'} + Z_{E'}) \quad .$$

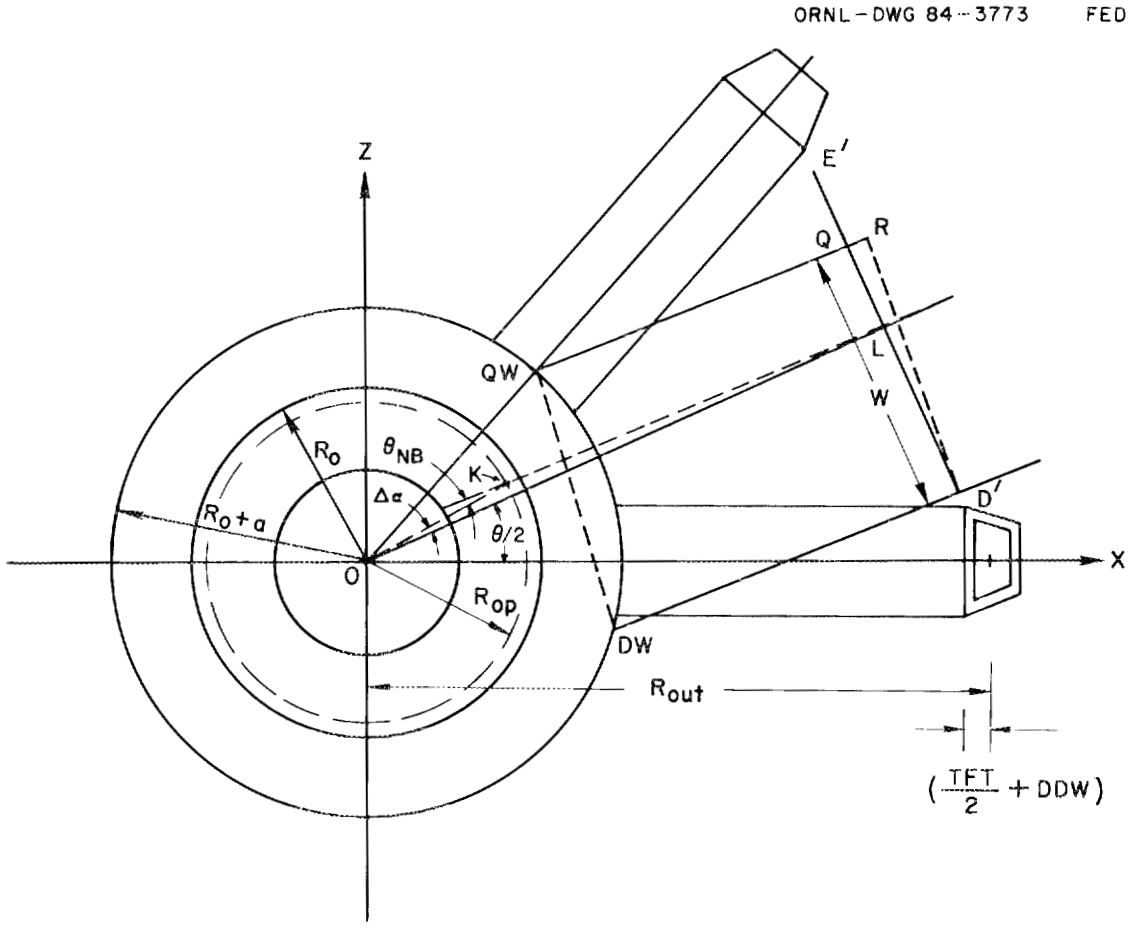

(NOT TO SCALE)

Fig. 60. Neutral beam/TF coil interface.

With known neutral-beam-injection angle θ_{NB}, the angle between lines OK and OL is

$$\Delta\alpha = \theta_{NB}\left[1 - \frac{R_{op}}{R_{out} - \frac{TFT}{2} - DDW}\right] ,$$

where R_{op} is R_o - a(1 - AFAC); AFAC is an input parameter used to determine the point K where the neutral beam angle is measured.

The point K, where the neutral beam angle is measured, can be determined through constructing a line at the angle $\Delta\alpha$ above the line OL to intersect the circle of radius R_{op}. The location of point K is

$$X_K = R_{op} \cos\left(\frac{\theta}{2} + \Delta\alpha\right)$$

and

$$Z_K = R_{op} \sin\left(\frac{\theta}{2} + \Delta\alpha\right) ,$$

where

θ is $360°/N_{TF}$

and N_{TF} is the number of TF coils.

The slope of the line connecting points L and K is

$$SLK = \frac{R_{op} \sin\left(\frac{\theta}{2} + \Delta\alpha\right) - R_{out} \sin\left(\frac{\theta}{2}\right)\cos\theta}{R_{op} \cos\left(\frac{\theta}{2} + \Delta\alpha\right) - R_{out}\left(1 - \sin\frac{\theta}{2}\sin\theta\right) + \frac{TFT}{2} + DDW} .$$

The line passing through point D′, with the slope SLK, intersects the torus $X^2 + Z^2 = (R_o + a)^2$ at the point (X_{DW}, Z_{DW}) and is of the form

$$Z = (SLK)X + [Z_{D'} - (SLK)X_{D'}] \quad .$$

The line passing through point D′ and perpendicular to the line D′DW is written as

$$Z = \frac{-X}{SLK} + \left(Z_{D'} + \frac{X_{D'}}{SLK}\right) \quad .$$

The point R (X_R, Z_R) is located at a distance w away from the point D′ on this line. Here w, corresponds to the width of the neutral beam unit and

$$X_R = X_{D'} \frac{w}{\sqrt{1 + \frac{1}{(SLK)^2}}}$$

and

$$Z_R = \frac{w}{(SLK)\sqrt{1 + \frac{1}{(SLK)^2}}} \quad .$$

The line, with slope of SLK, passing through point K, represented by

$$Z = (SLK)X + \frac{w}{(SLK)\sqrt{1 + \frac{1}{(SLK)^2}}} - (SLK)\left(X_{D'} - \frac{w}{\sqrt{1 + \frac{1}{(SLK)^2}}}\right) ,$$

is constructed next. This line intersects the torus at point QW and the location of this point is computed from solving the following two equations simultaneously:

$$X^2 + Z^2 = (R_o + a)^2$$

and

$$Z = (SLK)X + \left[\frac{w}{(SLK)\sqrt{1 + \frac{1}{(SLK)^2}}} - SLK\left(X_{D'} - \frac{w}{\sqrt{1 + \frac{1}{(SLK)^2}}}\right)\right] .$$

Finally, the available heights at various points of interest are determined from already known TF coil geometries. These height are checked against the height of the neutral-beam-injection unit to determine if the required height is more than the available height.

A listing of input variables is given in Table 23. Tables 24 and 25 show sample input and output files, respectively. In Table 25, there are two sample output files presented. The first case is the typical output file when the required width exceeds the available width. The second case corresponds to a typical output file of no geometric interference between TF coils and the neutral beam unit.

Table 23. Input variable listing

Variable	Description	Unit	Remarks[a]
AFAC	A factor used to locate the point where the neutral beam angle is measured. Its value ranges from 0 to 1 to 2 corresponding to a location at the torus outboard plasma center and the torus inboard, respectively.		U
AMINOR	The plasma minor radius	m	
BCYLIR	The bucking cylinder inner radius	m	
BCYLTH	The bucking cylinder radius	m	
DDW	The dewar thickness	m	
DGAP	The gap between a TF coil and a neutral beam unit	cm	
RCMDCS	The distance from the machine center to the outer surface of the TF coil inner leg	m	
RO	The major radius	m	
ROUT	The radius to the midpoint of the TF coil outer leg	m	
RV	The radius of the torus inboard	m	
TFNO	The number of TF coils		
THENB	The neutral-beam-injection angle	degree	
THSNB	The neutral beam unit shield thickness	cm	
XØ	The width plus shield thickness of the neutral beam unit	m	
XØØ	The width of the neutral beam unit	cm	
YØØ	The height of the neutral beam unit	cm	
YØ2	The height plus the shield thickness of the neutral beam unit	m	

[a]U represents user-input parameters.

Table 24. User-input data file NBGUID

```
  afac          a factor used to locate the point where
                   the neutral beam angle is measured.
                   its values range from Ø., 1. to 2.
                   corresponding to a loction at the
                   torus outboard, the plasma center,
                   and the torus inboard, respectively.
  dgap          the gap between the neutral beam          cm
                   injector and the tf coil to allow
                   removal of the injector.
  thsnb         neutral beam unit shield thickness        cm
&nbgin
dgap=Ø.  afac=Ø.  thsnb=5Ø.
&endnbgin
```

Table 25. Sample output files NBGETYP

```
                ***********************************************

Case I          NEUTRAL BEAM AND TOROIDAL FIELD COIL INTERFFACE

                NEUTRAL BEAM ANGLE= 35.000 DEGREE
                AFAC=  0.000
                GAP=  0.100 METER
                NEUTRAL BEAM  WIDTH=  1.000M
                NEUTRAL BEAM  HEIGHT=  1.200M
                NEUTRAL BEAM  PLUS SHIELD WIDTH=  2.000M
                NEUTRAL BEAM  PLUS SHIELD HEIGHT=  2.200M
                NEUTRAL BEAM  SHIELD THICKNESS=  0.500 M

                ************************************
                ******      WARNING      ******
                ************************************

                ******EXCEEDED AVAILABLE WIDTH******
                ************************************
                REQUIRED WIDTH=  2.108 M     AVAILABLE WIDTH=  1.562 M
                INTERSECTION POINTS ARE
                XD= -0.342 M     YD=  1.055 M
                XINT= -1.124 M     YINT=  3.012 M
                XOW=  1.743 M     YOW=  3.182 M
                XDW=  2.073 M     YDW=  1.198 M
                ***********************************************

Case II         NEUTRAL BEAM AND TOROIDAL FIELD COIL INTERFFACE

                NEUTRAL BEAM ANGLE= 35.000 DEGREE
                AFAC=  0.000
                GAP=  0.100 METER
                NEUTRAL BEAM  WIDTH=  1.000M
                NEUTRAL BEAM  HEIGHT=  1.200M
                NEUTRAL BEAM  PLUS SHIELD WIDTH=  2.000M
                NEUTRAL BEAM  PLUS SHIELD HEIGHT=  2.200M
                NEUTRAL BEAM  SHIELD THICKNESS=  0.500 M

                ******SOLUTION******

                THE COORDINATES OF INTERSECTION POINTS ARE
                XD=  2.371 M     ZD=  0.334 M
                XO=  0.828 M     ZO=  2.246 M
                REQUIRED HEIGHT=  1.100 M     AVAILABLE HEIGHT=  1.875 M
                REQUIRED WIDTH=  2.673 M     AVAILABLE WIDTH=  5.183 M
                WIDTH PROJECTED ON TORUS=  2.457 M
```

9. POLOIDAL FIELD POWER CONVERSION MODULE

The pulsed power conversion code module computes time-varying electrical parameters for the PF coils and the plasma, requirements data for the pulsed power supplies and energy storage system, cost estimates for the major systems, and the cost of the entire group. The module can provide for a maximum of 19 PF coil circuits and the plasma circuit. Input data from several other systems code modules are used to compute PF electrical output data: adat, eledat, htsdat, phydat, and rfhdat. The printout may include five tables of time-varying parameters, requirements data, and cost data (long printout), or only the latter data without the time-varying parameters (short printout).

CODE BASIS

The code is based on having PF coil power conversion and protection systems similar to that shown in Fig. 61 for superconducting coils and Fig. 62 for resistive conducting coils. Figures 63 and 64 show typical power conversion units represented by blocks in Fig. 61. Note that the power units contain both burn phase, low-voltage bridge rectifiers in the middle and startup/shutdown pulsed power rectifier-inverters on each side of Figs. 63 and 64. The coil protection system includes both the I&C for detecting faulted operation and initiating the discharge of the PF coils and the switches, circuit breakers, and dump resistors shown in Fig. 61.

The energy storage system is predicated on the use of motor-generator-flywheel (MGF) units and a variable-frequency power distribution system having feeders to the power rectifier-inverters similar to that shown in Fig. 65. The cost of the energy storage system includes the MGF units, the current limiters, the circuit breakers, and the power feeders.

The PF electrical code module does not determine the ratings and costs of the components, but it does compute coil-stored energies, the maximum power and energy for each power supply, and the cost of each PF coil power conversion system using cost algorithms for the pulsed power supply, the burn power supply, the coil protection system, the buss

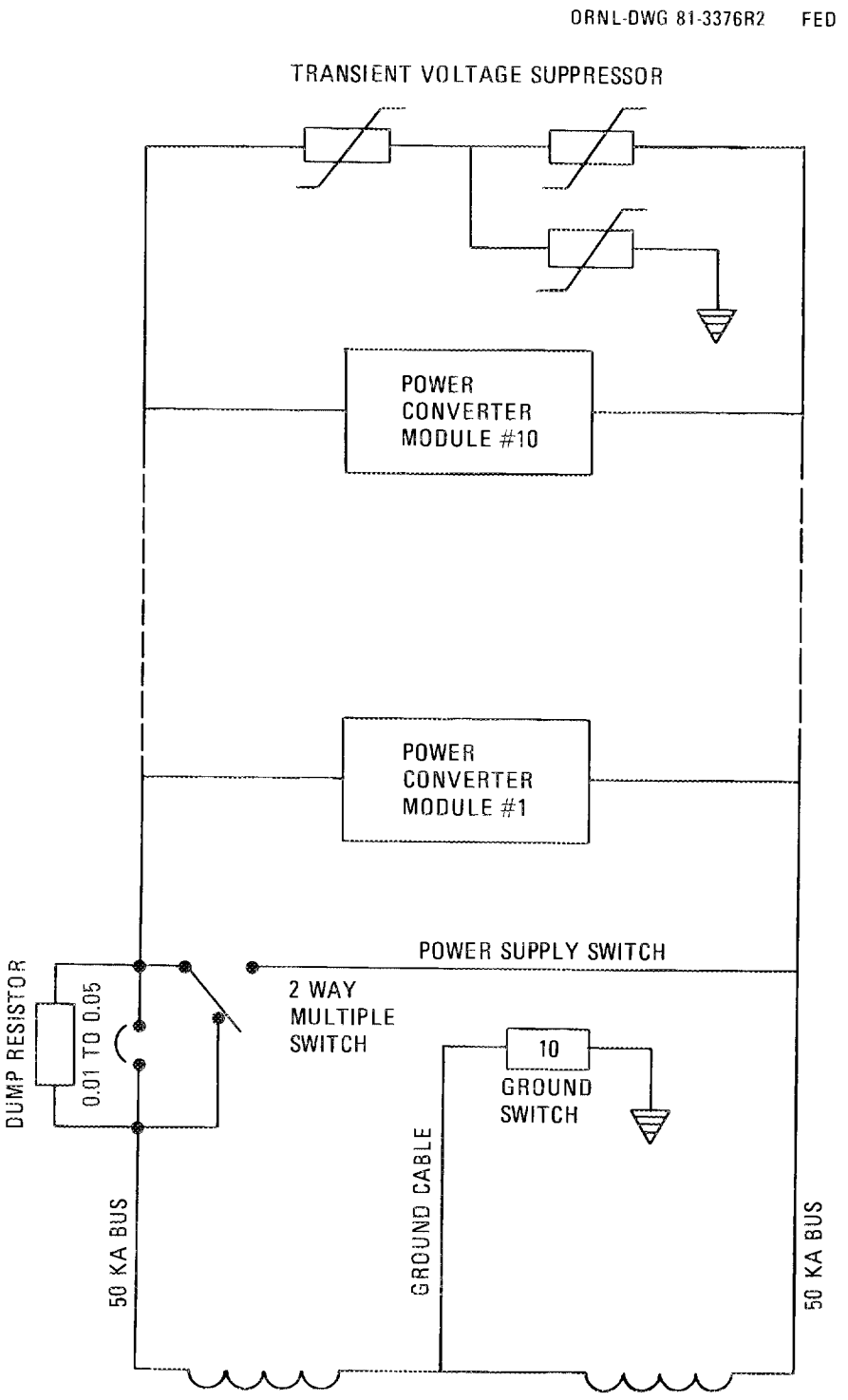

Fig. 61. Typical superconducting PF coil power conversion and protection system.

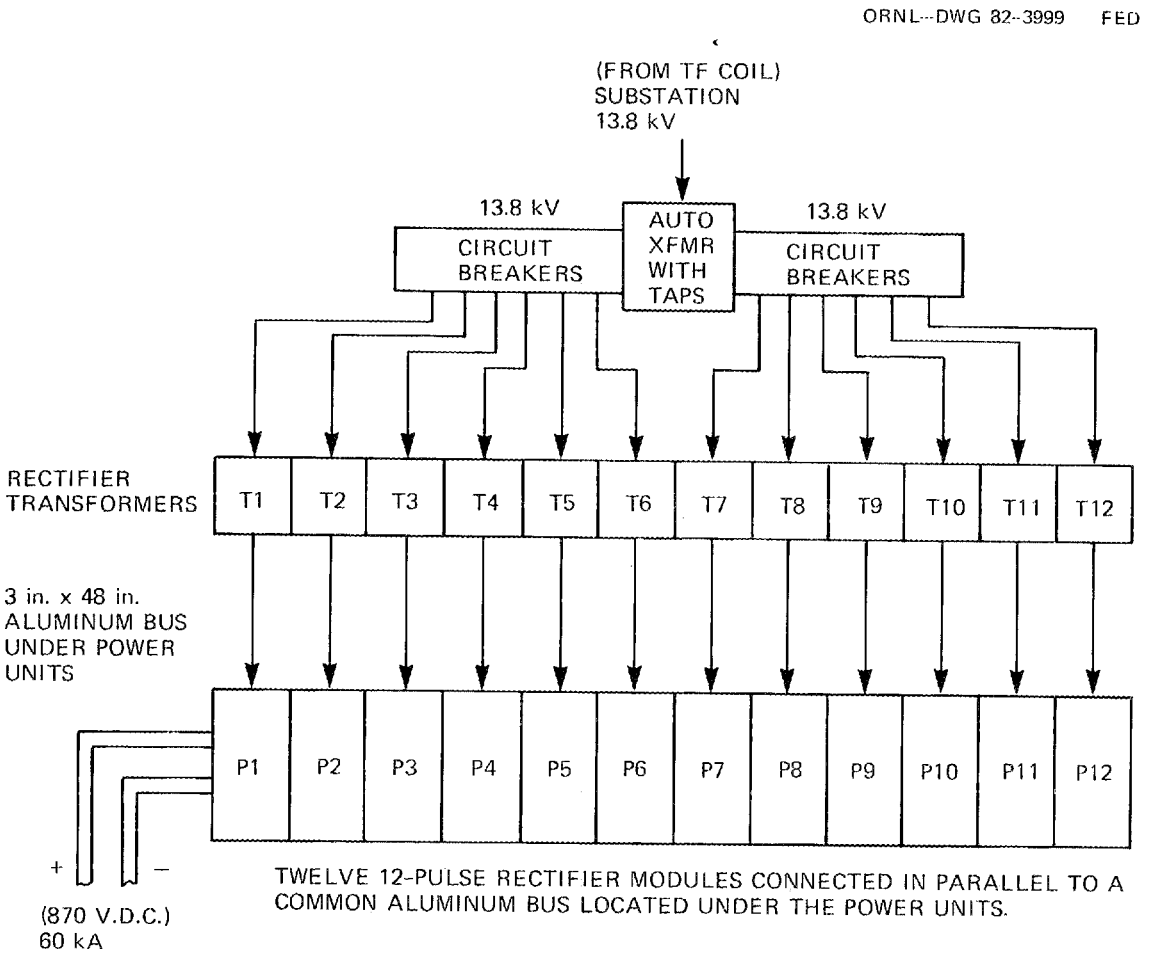

Fig. 62. Typical resistive coil dc power supply with auto-transformer voltage adjustment.

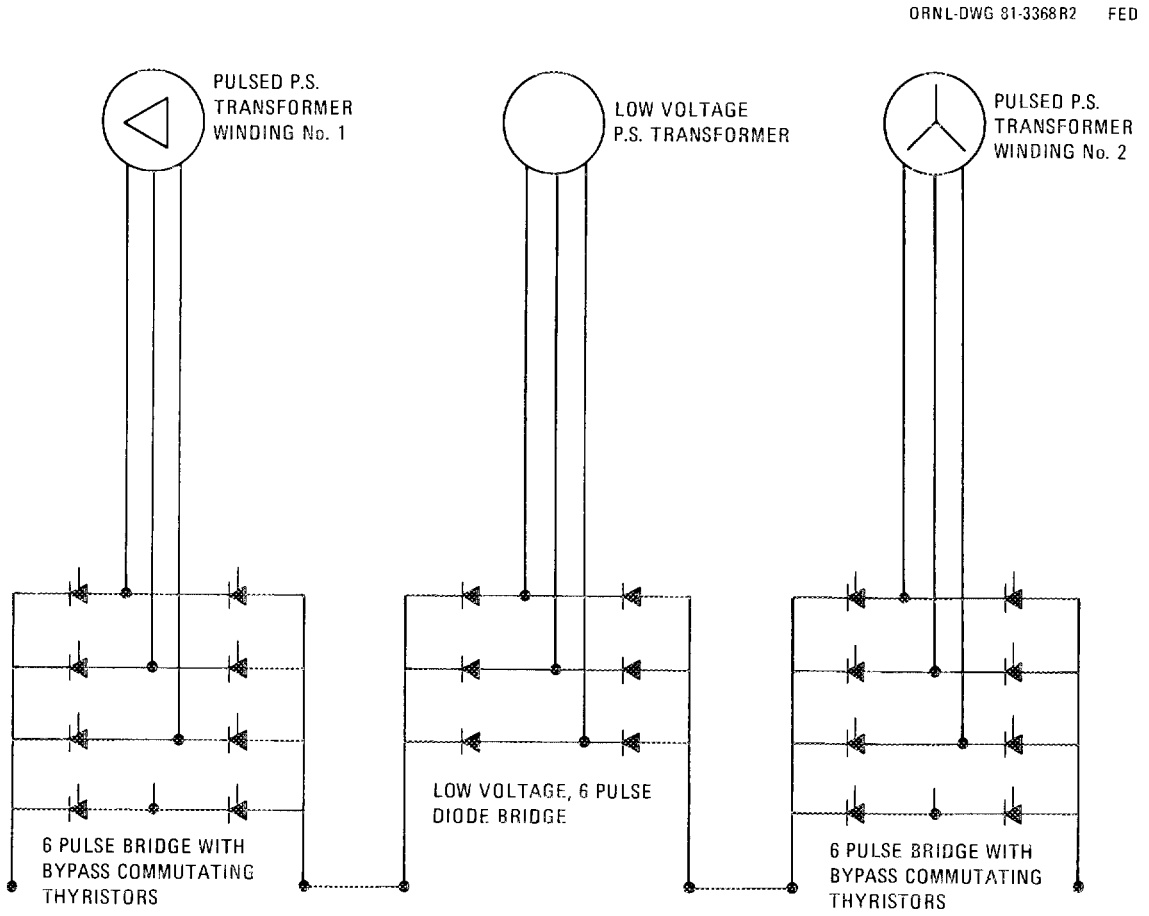

Fig. 63. Type A power conversion module (12 pulse, ± kV, 5 kA with maximum rating of 6 kA).

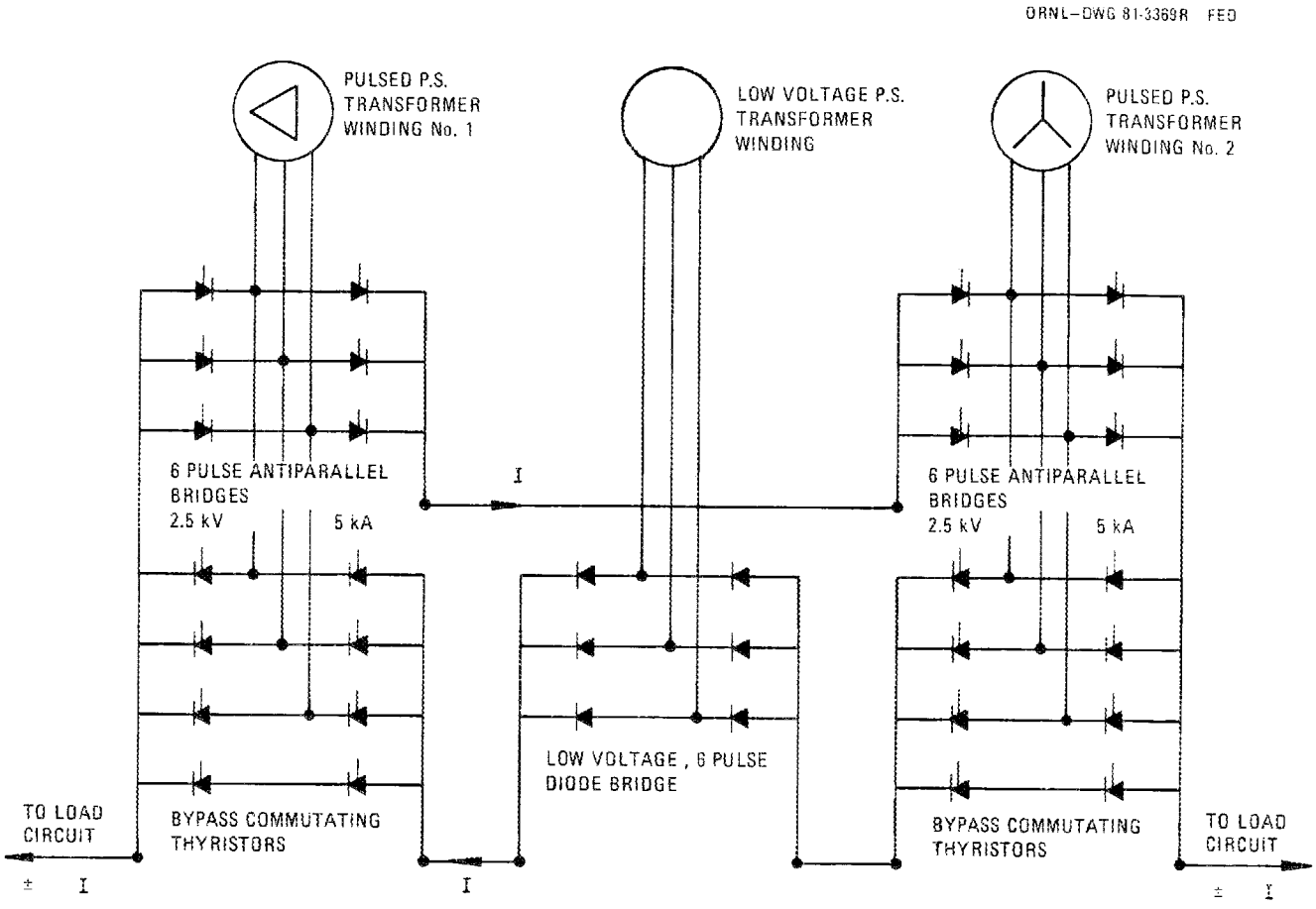

Fig. 64. Type B power conversion module (12 pulse, ±5 kV, ± 5 kA with maximum rating of ± kA.

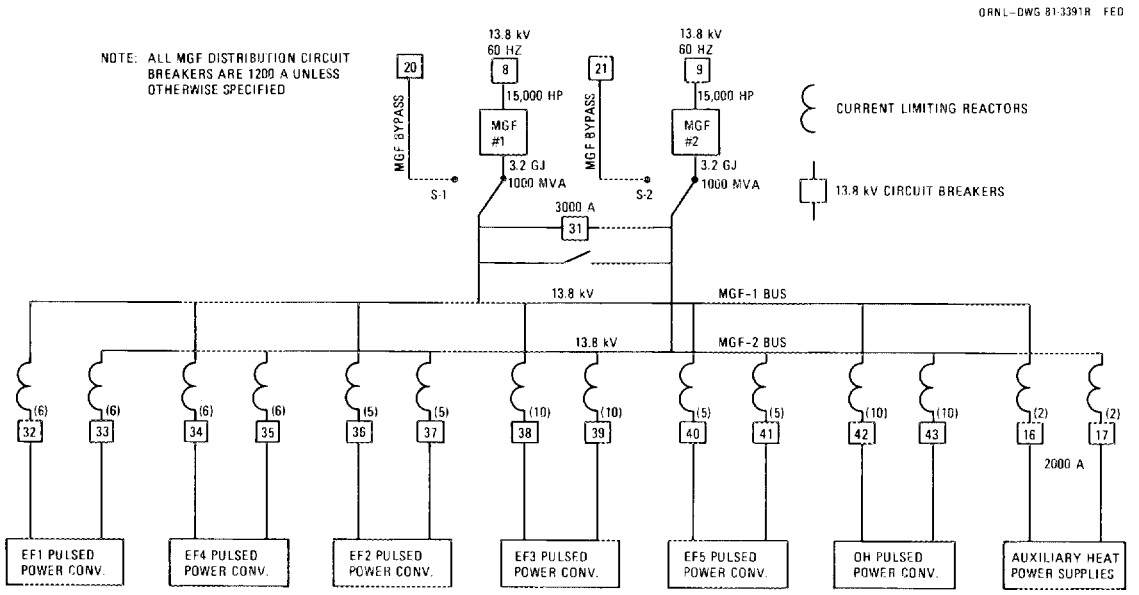

Fig. 65. One-line diagram of a typical ac energy storage system.

work, and the local I&C. The code module also calculates the peak power and energy demand from the MGF units during startup and the utility line power for restoring the MGF units to their maximum energy state during each cycle of operation. The cost of the energy storage system is computed from this data. In addition, this code module computes the floor space and building volume needed for the power conversion and energy storage systems. These data are used by the facilities code module.

CODE INPUT/OUTPUT DATA

The PF electrical code module uses the input data identified in Table 26. This table lists the code mnemonics, the principal use of the data, the expected range of the data, and the mnemonic description. Most of the data are defined with mnemonics having matrix notation as it appears in the coding. One index of the matrix refers to time or the PF coil circuit number; the other one, when used, refers to the coil current sequence number, time, or another mutually coupled coil.

The input data consist of coordinates of the PF coil wave forms, the inductance matrix of the PF coils, the resistance of the coils, the lengths of the bussing in each coil circuit, the pulsed power demand of the plasma heating ICRH, ECRH, LHRH, and neutral beam injection (NBI) power supplies, the cost coefficients, and the print option index. The PF coil current wave-form coordinates, cpt(i,j) and seqti(j), are illustrated in the current wave forms of Fig. 66. A typical inductance matrix, sxℓg(i,j), is given in Table 27.

The PF power conversion code module computes the output data identified in Table 28 also given in matrix notation if applicable. This table lists the same information given in Table 26 except for the principal code use. The principal use of most of this data is to provide printed output. Except for data identified with asterisks, the data are also used in making other internal calculations. Output data identified with asterisks are used in other system code modules identified in the footnotes of Table 28. Typical output data for the short printout are given in Table 29. Typical additional time-varying

Table 26. ELEPOW input data description

Code mnemonic	Code use	Expected range	Mnemonic description
cpt(i,j)	Compute derivative of PF coil currents	-100 kA +100 kA	Current sequence coordinate (j) of PF coil (i)
cptd(i)	Compute the bus resistance of coil (i)	-100 kA	Design current of PF coil (i)
busℓ(i)	Compute the bus resistance of coil (i)	100 300	Total bus length of PF coil (i)
seqti(j)	Compute derivative of PF coil currents	-100 s 1000 s	Time coordinate of PF coil sequence current coordinate (j)
sxℓg(i,j)	Compute induced voltage in PF coil (i) due to current in Pf coil (j)	1 mH 10 H	Mutual inductance between PF coil (i) and PF coil (j)
resn2(i)	Compute power loss in coil (i)	0.0 Ω 0.1 Ω	Resistance of PF coil (i)
pnb	Compute MGF stored energy requirement	0.0 MW 50.0 MW	Neutral beam dc power input
xcbhp	Compute MGF stored energy requirement	0.0 MW 50.0 MW	ICRH dc power input
pℓhbh	Compute MGF stored energy requirement	0.0 MW 50.0 MW	LHRH dc power input
*cva(j)	Compute PF coil (j) power conversion system cost	0.02 0.04	Unit cost of pulsed power converters for coil (j), $M/mva
*c2p(j)	Compute cost of protection for coil (j)	0.001 0.002	Unit cost of cost protection equipment for coil (j), $M/mj

Table 26. (continued)

Code mnemonic	Code use	Expected range	Mnemonic description
*cbi(j)	Compute cost of bus work for coil (j)	3E-5 8E-5	Cost coefficient of PF coil (j) bus work, $M/m-ka
*cbz(j)	Compute cost of burn power supplies for coil (j)	0.10 0.20	Unit cost of burn power supplies, $M/mva
*cℓp(j)	Compute cost of instrumentation for coil (j)	0.05 0.10	Nominal cost of local I&C for coil (j), $M
*cai(j)	Compute cost of local I&C for coil (j)	1.0 1.5	Cost multiplier factor for local I&C of PF coil (j)
*iout	Print some output = 1 Print no output = 0		No print option
*elewrt	Print summary output = 0 Print entire output = 1		Print option index

*Inputs from the user's data file; all other inputs are from other systems code subroutine modules.

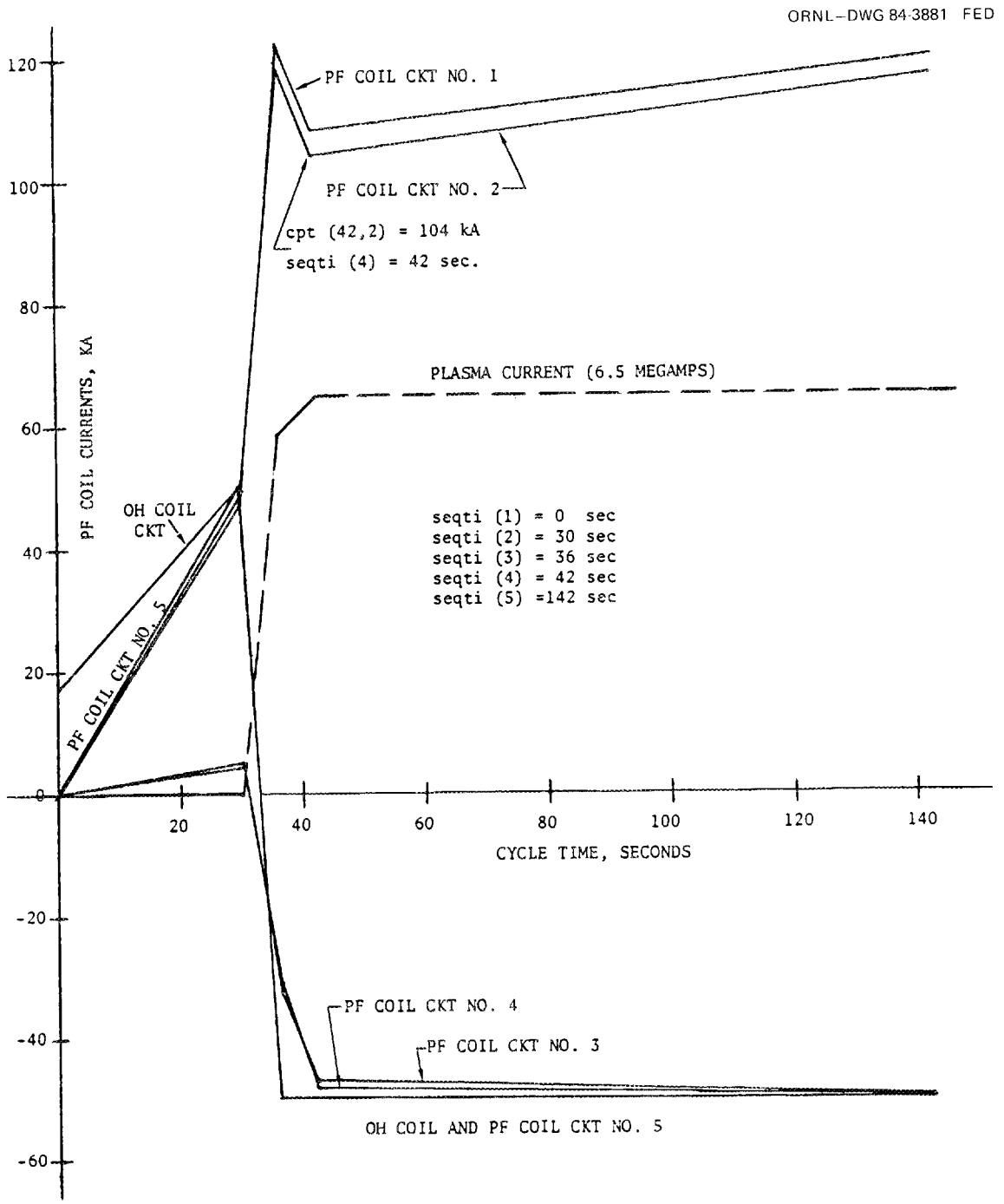

Fig. 66. PF coil waveforms constructed from the data in the lower part of Table 27.

Table 27. Typical inductance matrix henries and PF coil current waveform coordinate data

inductance matrix

circuit	1	2	3	4	5	oh	plasma
1	1.8133e-02	4.0010e-04	1.4353e-02	6.5210e-03	2.0164e-03	1.1254e-02	8.7570e-05
2	4.0010e-04	1.0050e-02	2.9415e-03	1.0618e-02	1.6862e-03	1.1348e-02	5.5759e-05
3	1.4353e-02	2.9415e-03	6.3432e-01	9.0251e-02	6.0705e-03	2.2496e-02	4.6146e-04
4	6.5210e-03	1.0618e-02	9.0251e-02	1.3319e+00	7.9823e-03	3.0807e-02	5.9304e-04
5	2.0164e-03	1.6862e-03	6.0705e-03	7.9823e-03	8.6738e-02	4.3056e-02	1.2220e-04
oh	1.1254e-02	1.1348e-02	2.2496e-02	3.0807e-02	4.3056e-02	4.0405e-01	3.0240e-04
plasma	8.7570e-05	5.5759e-05	4.6146e-04	5.9304e-04	1.2220e-04	3.0240e-04	8.5740e-06

wave forms
current per turn (ka)

time (sec)

circuit	0.00	30.00	36.00	42.00	142.00	152.00
1	0.00	49.37	118.91	104.61	117.27	
2	0.00	47.73	121.30	107.85	119.04	
3	0.00	4.10	-32.53	-47.14	-49.67	
4	0.00	4.94	-31.54	-48.26	-49.91	
5	0.00	49.96	-49.96	-49.96	-49.96	
oh	16.47	49.91	-49.91	-49.91	-49.91	
plasma(ma)	0.00	0.00	5.84	6.50	6.50	

Table 28. ELEPOW output data description

Code mnemonic	Expected range	Mnemonic description
curent(j,i)	-100 kA +100 kA	Current in PF coil (i) circuit at time (j)
vv(j,i)	-12 kV +12 kV	Voltage across PF coil (i) circuit at time (j)
ww(j,i)	0.1 MW 500 MW	Instantaneous power to PF coil (i) circuit at time (j)
sumw(j)	1.0 MW 1000 MW	Sum of instantaneous power to all PF coil circuits at time (j)
ee(j,i)	1.0 MJ 4.0 GJ	Total energy to PF coil (i) circuit to time (j)
sume(j)	1.0 MJ 10.0 GJ	Sum of all energies to all PF coil circuits to time (j)
rloss(j,i)	10.0 kW 50.0 MW	Resistive power loss in PF coil (i) circuit at time (j)
va(j)	10.0 MVA 1.0 GVA	Maximum MVA of power supply for PF coil (j)
sjoule(j)	0.1 GJ 5.0 GJ	Total energy of power supply for PF coil (j)
bva(j)	0.1 MW 50.0 MW	Maximum MW of burn power supply for PF coil (j)
costps(j)	1.0 M 20.0 M	Cost of power supplies for PF coil (j)
maxlos(j)	0.1 MW 50.0 MW	Maximum resistance loss in circuit of PF coil (j)
vam	300 MVA 3000 MVA	Maximum generator MVA
gj	0.5 GJ 20.0 GJ	Maximum stored energy from the generator
summax	10.0 MW 200 MW	Maximum of the sum of all power losses in the PF coil circuits
mgmake*	5.0 MW 50.0 MW	Average power from utility line to the stored energy MGF unit
mgbv**	1.0E4 m^3 5.0E4 m^3	Volume of the building for the MGF units
pfcbv**	2.0E4 m^3 2.0E5 m^3	Volume of the building for the PF coil power supplies

Table 28. (continued)

Code mnemonic	Expected range	Mnemonic description
espspm**	0.5E3 m^2 2.0E3 m^2	Floor area of the building for the MGF units
pfcfsp**	1.0E3 m^2 1.0E4 m^2	Floor area of the building for the PF coil power supplies
es***	10.0 $M 50.0 $M	Cost of the energy storage system
tcost***	40.0 $M 200.0 $M	Total cost of all PF coil power conversion equipment
gtcost***	50.0 $M 250.0 $M	Total cost of the pulsed power system (es + tcost)

*Used as an input ac power code module, ACPOW.

**Used as input to the facility systems code module, FACIL.

***Used as inputs to the summary cost code module, SUM.

Table 29. Short printout summary of the pulsed electric power conversion and energy storage system (mnemonics superimposed in left margin)

coil	1	2	3	4	5	oh
max mva of power supply	47.96	28.75	246.97	479.76	186.59	642.32
mj of power supply	287.81	160.01	806.45	1650.30	175.34	700.79
max mw of burn supply	31.87	22.35	1.18	1.52	0.41	0.33
cost of power supply	7.16	5.28	8.21	15.42	5.76	18.28
max. resis. loss (mw)	32.54	23.09	0.41	0.41	0.41	0.41

max generator (mva)	=	1619.43
max stored energy (gj)	=	3.78
total resistive losses (mw)	=	56.81
mg average power (mw)	=	31.54
vol. mg bldg. (m3)	=	18866.55
vol. pf power conv. bldg. (m3)	=	68990.28
eqv. floor space mgb (m2)	=	708.70
eqv. floor space pcb (m2)	=	6899.03
cost of energy storage (m$)	=	27.06
cost of power supplies (m$)	=	60.11
total electrical cost (m$)	=	87.17

parameter data for the long form printout are given in Tables 30–34. The mnemonics added to Tables 29 through 34 are not printed out; they are superimposed to correlate the data with Table 28.

PRINCIPAL PF ELECTRICAL CODE EQUATIONS

The PF electrical subroutine uses a number of generic equations applicable to each coil circuit. There can be as many as 20 coil circuits, counting the plasma as one of the circuits (i.e., NCIRT is the number of PF coil circuits plus the plasma). The generic equations are used in "do" loops identified in the listing and in the equations defined below.

1. Convert PF coil sequence coordinates of the current wave forms from kiloamps to amps (cpt = coil current also referred to as current per turn).

   do 50 cpt(i,j) = 1000 cpt (i,j)

   i = number of the PF coil circuit

   j = number of the current coordinate (1 to 5)

   i = ncirt - 1 is the OH coil number ($\leq$19)

   i = ncirt is the plasma circuit number ($\leq$20)

2. Convert plasma current sequence coordinates from megamps to amps (j = number of the current coordinate).

   do 52 cpt (ncirt,j) = 1,000,000 cpt (ncirt,j)

3. Bus resistance of each coil circuit, busr(i), ohms.

   do 70 busr(i) = 3.46E-5 busL(i)/abs(cptd(i)/1000)

   i = 1, ncirt - 1

   busℓ(i) = bus length of the <u>ith</u> circuit

   cptd(i) = design current of bussing of the <u>ith</u> PF coil circuit

   busr(ncirt) = 0, (plasma circuit)

4. PF coil circuit current, voltage, power, and energy calculations as a function of time for five sequences

   do 230 m = 1, 50

   do 210 kk = 1, 10 500 times

Table 30. PF coil current waveform data — current (i,j)
(see also Fig. 60)

pulse electrical

current table

time	circu1	circu2	circu3	circu4	circu5	circu6	plasma
3.333e+00	5.486e+03	5.304e+03	4.553e+02	5.490e+02	5.551e+03	2.018e+04	0.
6.667e+00	1.097e+04	1.061e+04	9.106e+02	1.098e+03	1.110e+04	2.390e+04	0.
1.000e+01	1.646e+04	1.591e+04	1.366e+03	1.647e+03	1.665e+04	2.761e+04	0.
1.333e+01	2.194e+04	2.121e+04	1.821e+03	2.196e+03	2.220e+04	3.133e+04	0.
1.667e+01	2.743e+04	2.652e+04	2.277e+03	2.745e+03	2.775e+04	3.504e+04	0.
2.000e+01	3.291e+04	3.182e+04	2.732e+03	3.294e+03	3.330e+04	3.876e+04	0.
2.333e+01	3.840e+04	3.713e+04	3.187e+03	3.843e+03	3.886e+04	4.248e+04	0.
2.667e+01	4.389e+04	4.243e+04	3.643e+03	4.392e+03	4.441e+04	4.619e+04	0.
3.000e+01	4.937e+04	4.773e+04	4.098e+03	4.941e+03	4.996e+04	4.991e+04	0.
3.060e+01	5.633e+04	5.509e+04	4.346e+02	1.293e+03	3.997e+04	3.992e+04	5.837e+05
3.120e+01	6.328e+04	6.245e+04	-3.229e+03	-2.356e+03	2.997e+04	2.994e+04	1.167e+06
3.180e+01	7.023e+04	6.980e+04	-6.892e+03	-6.004e+03	1.998e+04	1.996e+04	1.751e+06
3.240e+01	7.719e+04	7.716e+04	-1.056e+04	-9.652e+03	9.991e+03	9.981e+03	2.335e+06
3.300e+01	8.414e+04	8.452e+04	-1.422e+04	-1.330e+04	-4.657e-10	1.048e-09	2.918e+06
3.360e+01	9.110e+04	9.187e+04	-1.788e+04	-1.695e+04	-9.991e+03	-9.981e+03	3.502e+06
3.420e+01	9.805e+04	9.923e+04	-2.154e+04	-2.060e+04	-1.998e+04	-1.996e+04	4.085e+06
3.480e+01	1.050e+05	1.066e+05	-2.521e+04	-2.425e+04	-2.997e+04	-2.994e+04	4.669e+06
3.540e+01	1.120e+05	1.139e+05	-2.887e+04	-2.789e+04	-3.997e+04	-3.992e+04	5.253e+06
3.600e+01	1.189e+05	1.213e+05	-3.253e+04	-3.154e+04	-4.996e+04	-4.991e+04	5.837e+06
3.660e+01	1.175e+05	1.200e+05	-3.399e+04	-3.321e+04	-4.996e+04	-4.991e+04	5.903e+06
3.720e+01	1.161e+05	1.186e+05	-3.546e+04	-3.489e+04	-4.996e+04	-4.991e+04	5.970e+06
3.780e+01	1.146e+05	1.173e+05	-3.692e+04	-3.656e+04	-4.996e+04	-4.991e+04	6.037e+06
3.840e+01	1.132e+05	1.159e+05	-3.838e+04	-3.823e+04	-4.996e+04	-4.991e+04	6.104e+06
3.900e+01	1.118e+05	1.146e+05	-3.984e+04	-3.990e+04	-4.996e+04	-4.991e+04	6.171e+06
3.960e+01	1.103e+05	1.132e+05	-4.130e+04	-4.157e+04	-4.996e+04	-4.991e+04	6.237e+06
4.020e+01	1.089e+05	1.119e+05	-4.276e+04	-4.325e+04	-4.996e+04	-4.991e+04	6.304e+06
4.080e+01	1.075e+05	1.105e+05	-4.422e+04	-4.492e+04	-4.996e+04	-4.991e+04	6.371e+06
4.140e+01	1.060e+05	1.092e+05	-4.568e+04	-4.659e+04	-4.996e+04	-4.991e+04	6.438e+06
4.200e+01	1.046e+05	1.078e+05	-4.714e+04	-4.826e+04	-4.996e+04	-4.991e+04	6.505e+06
5.200e+01	1.059e+05	1.090e+05	-4.739e+04	-4.843e+04	-4.996e+04	-4.991e+04	6.505e+06
6.200e+01	1.071e+05	1.101e+05	-4.764e+04	-4.859e+04	-4.996e+04	-4.991e+04	6.505e+06
7.200e+01	1.084e+05	1.112e+05	-4.790e+04	-4.876e+04	-4.996e+04	-4.991e+04	6.505e+06
8.200e+01	1.097e+05	1.123e+05	-4.815e+04	-4.892e+04	-4.996e+04	-4.991e+04	6.505e+06
9.200e+01	1.109e+05	1.134e+05	-4.840e+04	-4.909e+04	-4.996e+04	-4.991e+04	6.505e+06
1.020e+02	1.122e+05	1.146e+05	-4.866e+04	-4.925e+04	-4.996e+04	-4.991e+04	6.505e+06
1.120e+02	1.135e+05	1.157e+05	-4.891e+04	-4.942e+04	-4.996e+04	-4.991e+04	6.505e+06
1.220e+02	1.147e+05	1.168e+05	-4.916e+04	-4.958e+04	-4.996e+04	-4.991e+04	6.505e+06
1.320e+02	1.160e+05	1.179e+05	-4.942e+04	-4.974e+04	-4.996e+04	-4.991e+04	6.505e+06
1.420e+02	1.173e+05	1.190e+05	-4.967e+04	-4.991e+04	-4.996e+04	-4.991e+04	6.505e+06
1.430e+02	1.055e+05	1.071e+05	-4.470e+04	-4.492e+04	-4.496e+04	-4.327e+04	5.854e+06
1.440e+02	9.382e+04	9.523e+04	-3.974e+04	-3.993e+04	-3.997e+04	-3.663e+04	5.204e+06
1.450e+02	8.209e+04	8.333e+04	-3.477e+04	-3.494e+04	-3.497e+04	-2.999e+04	4.553e+06
1.460e+02	7.036e+04	7.142e+04	-2.980e+04	-2.995e+04	-2.997e+04	-2.336e+04	3.903e+06
1.470e+02	5.864e+04	5.952e+04	-2.484e+04	-2.495e+04	-2.498e+04	-1.672e+04	3.252e+06
1.480e+02	4.691e+04	4.761e+04	-1.987e+04	-1.996e+04	-1.998e+04	-1.008e+04	2.602e+06
1.490e+02	3.518e+04	3.571e+04	-1.490e+04	-1.497e+04	-1.499e+04	-3.443e+03	1.951e+06
1.500e+02	2.345e+04	2.381e+04	-9.934e+03	-9.982e+03	-9.991e+03	3.194e+03	1.301e+06
1.510e+02	1.173e+04	1.190e+04	-4.967e+03	-4.991e+03	-4.996e+03	9.831e+03	6.505e+05
1.520e+02	-2.437e-09	-1.473e-08	1.642e-08	2.119e-08	-2.794e-09	1.647e+04	-1.152e-06

Table 31. PF coil voltage waveform data — vv(j,i)

voltage table

time	circu1	circu2	circu3	circu4	circu5	circu6	plasma
3.333e+00	6.204e+01	4.258e+01	1.651e+02	3.070e+02	2.015e+02	5.701e+02	-9.341e-01
5.667e+00	7.466e+01	5.090e+01	1.651e+02	3.071e+02	2.024e+02	5.707e+02	-9.341e-01
1.000e+01	8.729e+01	5.923e+01	1.652e+02	3.072e+02	2.033e+02	5.713e+02	-9.341e-01
1.333e+01	9.991e+01	6.755e+01	1.653e+02	3.073e+02	2.043e+02	5.720e+02	-9.341e-01
1.667e+01	1.125e+02	7.587e+01	1.654e+02	3.074e+02	2.052e+02	5.725e+02	-9.341e-01
2.000e+01	1.252e+02	8.420e+01	1.654e+02	3.075e+02	2.061e+02	5.732e+02	-9.341e-01
2.333e+01	1.378e+02	9.252e+01	1.655e+02	3.076e+02	2.070e+02	5.738e+02	-9.341e-01
2.667e+01	1.504e+02	1.008e+02	1.656e+02	3.077e+02	2.080e+02	5.744e+02	-9.341e-01
3.000e+01	1.630e+02	1.092e+02	1.657e+02	3.078e+02	2.089e+02	5.751e+02	-9.341e-01
3.060e+01	8.183e+01	-3.082e+01	-4.245e+03	-8.512e+03	-2.077e+03	-7.193e+03	1.179e+01
3.120e+01	9.783e+01	-1.928e+01	-4.246e+03	-8.513e+03	-2.078e+03	-7.194e+03	1.179e+01
3.180e+01	1.138e+02	-7.733e+00	-4.247e+03	-8.513e+03	-2.080e+03	-7.196e+03	1.179e+01
3.240e+01	1.298e+02	3.812e+00	-4.247e+03	-8.514e+03	-2.082e+03	-7.198e+03	1.179e+01
3.300e+01	1.458e+02	1.536e+01	-4.248e+03	-8.514e+03	-2.083e+03	-7.199e+03	1.179e+01
3.360e+01	1.619e+02	2.690e+01	-4.249e+03	-8.515e+03	-2.085e+03	-7.201e+03	1.179e+01
3.420e+01	1.779e+02	3.845e+01	-4.249e+03	-8.516e+03	-2.087e+03	-7.203e+03	1.179e+01
3.480e+01	1.939e+02	4.999e+01	-4.250e+03	-8.516e+03	-2.088e+03	-7.204e+03	1.179e+01
3.540e+01	2.099e+02	6.154e+01	-4.250e+03	-8.517e+03	-2.090e+03	-7.206e+03	1.179e+01
3.600e+01	2.259e+02	7.308e+01	-4.251e+03	-8.517e+03	-2.092e+03	-7.208e+03	1.179e+01
3.660e+01	1.829e+02	1.342e+02	-1.790e+03	-3.910e+03	-4.031e+01	-1.675e+02	3.110e+00
3.720e+01	1.796e+02	1.321e+02	-1.791e+03	-3.910e+03	-4.031e+01	-1.675e+02	3.110e+00
3.780e+01	1.763e+02	1.300e+02	-1.791e+03	-3.910e+03	-4.031e+01	-1.675e+02	3.110e+00
3.840e+01	1.730e+02	1.279e+02	-1.791e+03	-3.911e+03	-4.031e+01	-1.675e+02	3.110e+00
3.900e+01	1.697e+02	1.258e+02	-1.791e+03	-3.911e+03	-4.031e+01	-1.675e+02	3.110e+00
3.960e+01	1.664e+02	1.237e+02	-1.792e+03	-3.911e+03	-4.031e+01	-1.675e+02	3.110e+00
4.020e+01	1.631e+02	1.216e+02	-1.792e+03	-3.912e+03	-4.031e+01	-1.675e+02	3.110e+00
4.080e+01	1.598e+02	1.195e+02	-1.792e+03	-3.912e+03	-4.031e+01	-1.675e+02	3.110e+00
4.140e+01	1.566e+02	1.173e+02	-1.792e+03	-3.912e+03	-4.031e+01	-1.675e+02	3.110e+00
4.200e+01	1.533e+02	1.152e+02	-1.793e+03	-3.912e+03	-4.031e+01	-1.675e+02	3.110e+00
5.200e+01	2.455e+02	1.719e+02	-2.333e+01	-3.027e+01	-8.145e+00	-6.686e+00	4.127e-03
6.200e+01	2.484e+02	1.737e+02	-2.337e+01	-3.029e+01	-8.145e+00	-6.686e+00	4.127e-03
7.200e+01	2.514e+02	1.755e+02	-2.342e+01	-3.032e+01	-8.145e+00	-6.686e+00	4.127e-03
8.200e+01	2.543e+02	1.772e+02	-2.346e+01	-3.035e+01	-8.145e+00	-6.686e+00	4.127e-03
9.200e+01	2.572e+02	1.790e+02	-2.350e+01	-3.037e+01	-8.145e+00	-6.686e+00	4.127e-03
1.020e+02	2.601e+02	1.807e+02	-2.354e+01	-3.040e+01	-8.145e+00	-6.686e+00	4.127e-03
1.120e+02	2.630e+02	1.825e+02	-2.359e+01	-3.043e+01	-8.145e+00	-6.686e+00	4.127e-03
1.220e+02	2.659e+02	1.842e+02	-2.363e+01	-3.046e+01	-8.145e+00	-6.686e+00	4.127e-03
1.320e+02	2.689e+02	1.860e+02	-2.367e+01	-3.048e+01	-8.145e+00	-6.686e+00	4.127e-03
1.420e+02	2.718e+02	1.877e+02	-2.371e+01	-3.051e+01	-8.145e+00	-6.686e+00	4.127e-03
1.430e+02	1.571e+02	1.589e+02	3.270e+03	6.744e+03	6.584e+02	2.691e+03	-6.179e+00
1.440e+02	1.302e+02	1.402e+02	3.271e+03	6.745e+03	6.592e+02	2.693e+03	-6.179e+00
1.450e+02	1.032e+02	1.215e+02	3.272e+03	6.745e+03	6.601e+02	2.694e+03	-6.179e+00
1.460e+02	7.617e+01	1.029e+02	3.272e+03	6.746e+03	6.609e+02	2.695e+03	-6.179e+00
1.470e+02	4.918e+01	8.417e+01	3.273e+03	6.747e+03	6.617e+02	2.696e+03	-6.179e+00
1.480e+02	2.219e+01	6.549e+01	3.274e+03	6.748e+03	6.626e+02	2.697e+03	-6.179e+00
1.490e+02	-4.795e+00	4.681e+01	3.275e+03	6.749e+03	6.634e+02	2.698e+03	-6.179e+00
1.500e+02	-3.178e+01	2.813e+01	3.276e+03	6.750e+03	6.642e+02	2.699e+03	-6.179e+00
1.510e+02	-5.877e+01	9.443e+00	3.276e+03	6.750e+03	6.651e+02	2.700e+03	-6.179e+00
1.520e+02	-8.576e+01	-9.238e+00	3.277e+03	6.751e+03	6.659e+02	2.701e+03	-6.179e+00

Table 32. PF coil circuit instantaneous power data — ww(j,i)

watt table

time	circu1	circu2	circu3	circu4	circu5	circu6	sumwatt
3.333e+00	3.403e+05	2.258e+05	7.516e+04	1.686e+05	1.118e+06	1.151e+07	1.344e+07
6.667e+00	8.192e+05	5.399e+05	1.504e+05	3.372e+05	2.247e+06	1.364e+07	1.773e+07
1.000e+01	1.437e+06	9.424e+05	2.257e+05	5.060e+05	3.386e+06	1.578e+07	2.227e+07
1.333e+01	2.192e+06	1.433e+06	3.011e+05	6.748e+05	4.535e+06	1.792e+07	2.706e+07
1.667e+01	3.087e+06	2.012e+06	3.765e+05	8.438e+05	5.695e+06	2.007e+07	3.208e+07
2.000e+01	4.120e+06	2.679e+06	4.520e+05	1.013e+06	6.864e+06	2.222e+07	3.735e+07
2.333e+01	5.291e+06	3.435e+06	5.276e+05	1.182e+06	8.044e+06	2.437e+07	4.285e+07
2.667e+01	6.601e+06	4.279e+06	6.032e+05	1.351e+06	9.234e+06	2.653e+07	4.860e+07
3.000e+01	8.050e+06	5.211e+06	6.789e+05	1.521e+06	1.043e+07	2.870e+07	5.459e+07
3.060e+01	4.609e+06	-1.698e+06	-1.845e+06	-1.100e+07	-8.299e+07	-2.872e+08	-3.801e+08
3.120e+01	6.191e+06	-1.204e+06	1.371e+07	2.005e+07	-6.230e+07	-2.154e+08	-2.390e+08
3.180e+01	7.995e+06	-5.398e+05	2.927e+07	5.111e+07	-4.156e+07	-1.436e+08	-9.737e+07
3.240e+01	1.002e+07	2.941e+05	4.483e+07	8.218e+07	-2.080e+07	-7.184e+07	4.469e+07
3.300e+01	1.227e+07	1.298e+06	6.040e+07	1.132e+08	9.701e-07	-7.543e-06	1.872e+08
3.360e+01	1.474e+07	2.472e+06	7.597e+07	1.443e+08	2.083e+07	7.187e+07	3.302e+08
3.420e+01	1.744e+07	3.815e+06	9.155e+07	1.754e+08	4.170e+07	1.438e+08	4.737e+08
3.480e+01	2.036e+07	5.329e+06	1.071e+08	2.065e+08	6.259e+07	2.157e+08	6.176e+08
3.540e+01	2.350e+07	7.012e+06	1.227e+08	2.376e+08	8.353e+07	2.877e+08	7.620e+08
3.600e+01	2.686e+07	8.865e+06	1.383e+08	2.687e+08	1.045e+08	3.597e+08	9.069e+08
3.660e+01	2.149e+07	1.610e+07	6.087e+07	1.299e+08	2.014e+06	8.360e+06	2.387e+08
3.720e+01	2.084e+07	1.567e+07	6.349e+07	1.364e+08	2.014e+06	8.360e+06	2.468e+08
3.780e+01	2.021e+07	1.525e+07	6.611e+07	1.430e+08	2.014e+06	8.360e+06	2.549e+08
3.840e+01	1.958e+07	1.483e+07	6.874e+07	1.495e+08	2.014e+06	8.360e+06	2.630e+08
3.900e+01	1.897e+07	1.441e+07	7.136e+07	1.561e+08	2.014e+06	8.360e+06	2.712e+06
3.960e+01	1.836e+07	1.400e+07	7.399e+07	1.626e+08	2.014e+06	8.360e+06	2.793e+08
4.020e+01	1.777e+07	1.360e+07	7.662e+07	1.692e+08	2.014e+06	8.360e+06	2.875e+08
4.080e+01	1.718e+07	1.320e+07	7.925e+07	1.757e+08	2.014e+06	8.360e+06	2.957e+08
4.140e+01	1.660e+07	1.281e+07	8.187e+07	1.823e+08	2.014e+06	8.360e+06	3.039e+08
4.200e+01	1.603e+07	1.243e+07	8.450e+07	1.888e+08	2.014e+06	8.360e+06	3.122e+08
5.200e+01	2.600e+07	1.874e+07	1.106e+06	1.466e+06	4.069e+05	3.337e+05	4.804e+07
5.200e+01	2.662e+07	1.912e+07	1.114e+06	1.472e+06	4.069e+05	3.337e+05	4.907e+07
7.200e+01	2.725e+07	1.951e+07	1.122e+06	1.478e+06	4.069e+05	3.337e+05	5.010e+07
8.200e+01	2.789e+07	1.990e+07	1.130e+06	1.485e+06	4.069e+05	3.337e+05	5.115e+07
9.200e+01	2.853e+07	2.030e+07	1.138e+06	1.491e+06	4.069e+05	3.337e+05	5.220e+07
1.020e+02	2.919e+07	2.070e+07	1.146e+06	1.497e+06	4.069e+05	3.337e+05	5.327e+07
1.120e+02	2.985e+07	2.111e+07	1.154e+06	1.504e+06	4.069e+05	3.337e+05	5.435e+07
1.220e+02	3.051e+07	2.152e+07	1.162e+06	1.510e+06	4.069e+05	3.337e+05	5.544e+07
1.320e+02	3.119e+07	2.193e+07	1.170e+06	1.516e+06	4.069e+05	3.337e+05	5.655e+07
1.420e+02	3.187e+07	2.235e+07	1.178e+06	1.523e+06	4.069e+05	3.337e+05	5.766e+07
1.430e+02	1.659e+07	1.702e+07	-1.462e+08	-3.029e+08	-2.960e+07	-1.165e+08	-5.615e+08
1.440e+02	1.221e+07	1.335e+07	-1.300e+08	-2.693e+08	-2.635e+07	-9.863e+07	-4.987e+08
1.450e+02	8.469e+06	1.013e+07	-1.137e+08	-2.357e+08	-2.308e+07	-8.079e+07	-4.347e+08
1.460e+02	5.360e+06	7.346e+06	-9.752e+07	-2.020e+08	-1.981e+07	-6.294e+07	-3.696e+08
1.470e+02	2.884e+06	5.010e+06	-8.129e+07	-1.684e+08	-1.653e+07	-4.507e+07	-3.034e+08
1.480e+02	1.041e+06	3.118e+06	-6.505e+07	-1.347e+08	-1.324e+07	-2.719e+07	-2.360e+08
1.490e+02	-1.687e+05	1.672e+06	-4.880e+07	-1.010e+08	-9.942e+06	-9.291e+06	-1.676e+08
1.500e+02	-7.455e+05	6.696e+05	-3.254e+07	-6.737e+07	-6.636e+06	8.621e+06	-9.801e+07
1.510e+02	-6.893e+05	1.124e+05	-1.627e+07	-3.369e+07	-3.322e+06	2.655e+07	-2.732e+07
1.520e+02	2.090e-07	1.361e-07	5.380e-05	1.430e-04	-1.860e-06	4.449e+07	4.449e+07

Table 33. PF coil cumulative energy waveform data — ee(j,i)

joule table

time	circu1	circu2	circu3	circu4	circu5	circu6	sumjoule
3.333e+00	5.858e+05	3.897e+05	1.378e+05	3.090e+05	2.048e+06	8.996e+07	9.343e+07
6.667e+00	2.560e+06	1.694e+06	5.262e+05	1.180e+06	7.842e+06	1.322e+08	1.460e+08
1.000e+01	6.384e+06	4.207e+06	1.166e+06	2.613e+06	1.742e+07	1.816e+08	2.134e+08
1.333e+01	1.252e+07	8.224e+06	2.056e+06	4.610e+06	3.081e+07	2.381e+08	2.963e+08
1.667e+01	2.143e+07	1.404e+07	3.198e+06	7.169e+06	4.805e+07	3.018e+08	3.957e+08
2.000e+01	3.358e+07	2.194e+07	4.591e+06	1.029e+07	6.917e+07	3.726e+08	5.122e+08
2.333e+01	4.942e+07	3.224e+07	6.236e+06	1.398e+07	9.421e+07	4.506e+08	6.467e+08
2.667e+01	6.942e+07	4.521e+07	8.133e+06	1.823e+07	1.232e+08	5.358e+08	8.000e+08
3.000e+01	9.404e+07	6.116e+07	1.028e+07	2.304e+07	1.562e+08	6.282e+08	9.730e+08
3.060e+01	9.643e+07	6.004e+07	4.977e+06	8.057e+06	1.008e+08	4.366e+08	7.069e+08
3.120e+01	9.970e+07	5.918e+07	9.003e+06	1.170e+07	5.784e+07	2.880e+08	5.254e+08
3.180e+01	1.040e+08	5.867e+07	2.236e+07	3.399e+07	2.730e+07	1.824e+08	4.287e+08
3.240e+01	1.095e+08	5.861e+07	4.506e+07	7.491e+07	9.215e+06	1.199e+08	4.171e+08
3.300e+01	1.162e+08	5.911e+07	7.709e+07	1.345e+08	3.598e+06	1.005e+08	4.910e+08
3.360e+01	1.244e+08	6.027e+07	1.185e+08	2.127e+08	1.047e+07	1.242e+08	6.505e+08
3.420e+01	1.341e+08	6.218e+07	1.692e+08	3.095e+08	2.985e+07	1.911e+08	8.959e+08
3.480e+01	1.455e+08	6.496e+07	2.293e+08	4.250e+08	6.177e+07	3.011e+08	1.228e+09
3.540e+01	1.587e+08	6.871e+07	2.987e+08	5.592e+08	1.062e+08	4.543e+08	1.646e+09
3.600e+01	1.739e+08	7.352e+07	3.775e+08	7.120e+08	1.633e+08	6.506e+08	2.151e+09
3.660e+01	1.870e+08	8.330e+07	4.133e+08	7.881e+08	1.645e+08	6.556e+08	2.292e+09
3.720e+01	1.997e+08	9.282e+07	4.507e+08	8.682e+08	1.657e+08	6.607e+08	2.438e+09
3.780e+01	2.120e+08	1.021e+08	4.896e+08	9.522e+08	1.669e+08	6.657e+08	2.588e+09
3.840e+01	2.239e+08	1.111e+08	5.302e+08	1.040e+09	1.681e+08	6.707e+08	2.744e+09
3.900e+01	2.355e+08	1.198e+08	5.723e+08	1.132e+09	1.693e+08	6.757e+08	2.905e+09
3.960e+01	2.466e+08	1.284e+08	6.159e+08	1.228e+09	1.705e+08	6.807e+08	3.070e+09
4.020e+01	2.575e+08	1.366e+08	6.612e+08	1.328e+09	1.717e+08	6.857e+08	3.240e+09
4.080e+01	2.679e+08	1.447e+08	7.080e+08	1.431e+09	1.729e+08	6.908e+08	3.415e+09
4.140e+01	2.780e+08	1.524e+08	7.565e+08	1.539e+09	1.741e+08	6.958e+08	3.596e+09
4.200e+01	2.878e+08	1.600e+08	8.065e+08	1.650e+09	1.753e+08	7.008e+08	3.781e+09
5.200e+01	5.450e+08	3.456e+08	8.175e+08	1.665e+09	1.794e+08	7.041e+08	4.257e+09
6.200e+01	8.084e+08	5.351e+08	8.286e+08	1.680e+09	1.835e+08	7.075e+08	4.743e+09
7.200e+01	1.078e+09	7.285e+08	8.398e+08	1.694e+09	1.875e+08	7.108e+08	5.239e+09
8.200e+01	1.354e+09	9.257e+08	8.510e+08	1.709e+09	1.916e+08	7.141e+08	5.746e+09
9.200e+01	1.636e+09	1.127e+09	8.624e+08	1.724e+09	1.957e+08	7.175e+08	6.263e+09
1.020e+02	1.925e+09	1.332e+09	8.738e+08	1.739e+09	1.998e+08	7.208e+08	6.791e+09
1.120e+02	2.221e+09	1.541e+09	8.853e+08	1.754e+09	2.038e+08	7.241e+08	7.330e+09
1.220e+02	2.523e+09	1.755e+09	8.969e+08	1.769e+09	2.079e+08	7.275e+08	7.879e+09
1.320e+02	2.832e+09	1.972e+09	9.085e+08	1.784e+09	2.120e+08	7.308e+08	8.440e+09
1.420e+02	3.147e+09	2.194e+09	9.203e+08	1.799e+09	2.160e+08	7.342e+08	9.011e+09
1.430e+02	3.166e+09	2.213e+09	7.668e+08	1.481e+09	1.850e+08	6.097e+08	8.422e+09
1.440e+02	3.180e+09	2.228e+09	6.295e+08	1.197e+09	1.572e+08	5.030e+08	7.895e+09
1.450e+02	3.190e+09	2.239e+09	5.085e+08	9.462e+08	1.326e+08	4.142e+08	7.431e+09
1.460e+02	3.197e+09	2.248e+09	4.037e+08	7.290e+08	1.113e+08	3.432e+08	7.032e+09
1.470e+02	3.201e+09	2.254e+09	3.151e+08	5.455e+08	9.331e+07	2.901e+08	6.699e+09
1.480e+02	3.203e+09	2.258e+09	2.427e+08	3.956e+08	7.859e+07	2.549e+08	6.432e+09
1.490e+02	3.203e+09	2.260e+09	1.866e+08	2.794e+08	6.717e+07	2.375e+08	6.234e+09
1.500e+02	3.203e+09	2.261e+09	1.467e+08	1.969e+08	5.904e+07	2.381e+08	6.105e+09
1.510e+02	3.202e+09	2.261e+09	1.231e+08	1.481e+08	5.423e+07	2.566e+08	6.045e+09
1.520e+02	3.202e+09	2.261e+09	1.158e+08	1.329e+08	5.273e+07	2.930e+08	6.057e+09

Table 34. PF coil circuit resistive power loss data — rloss(j,i)

resistive loss table

time	circu1	circu2	circu3	circu4	circu5	circu6	plasma
3.333e+00	6.926e+04	4.415e+04	3.466e+01	5.015e+01	5.121e+03	6.779e+04	0.
6.667e+00	2.770e+05	1.765e+05	1.386e+02	2.006e+02	2.049e+04	9.504e+04	0.
1.000e+01	6.233e+05	3.973e+05	3.119e+02	4.513e+02	4.609e+04	1.269e+05	0.
1.333e+01	1.108e+06	7.064e+05	5.545e+02	8.024e+02	8.194e+04	1.633e+05	0.
1.667e+01	1.731e+06	1.104e+06	8.665e+02	1.254e+03	1.280e+05	2.044e+05	0.
2.000e+01	2.493e+06	1.589e+06	1.248e+03	1.805e+03	1.844e+05	2.500e+05	0.
2.333e+01	3.394e+06	2.163e+06	1.698e+03	2.457e+03	2.510e+05	3.002e+05	0.
2.667e+01	4.433e+06	2.825e+06	2.218e+03	3.209e+03	3.278e+05	3.550e+05	0.
3.000e+01	5.610e+06	3.576e+06	2.807e+03	4.062e+03	4.148e+05	4.144e+05	0.
3.050e+01	7.302e+06	4.763e+06	3.158e+01	2.780e+02	2.655e+05	2.652e+05	0.
3.120e+01	9.216e+06	6.120e+06	1.743e+03	9.233e+02	1.493e+05	1.492e+05	0.
3.180e+01	1.135e+07	7.647e+06	7.941e+03	5.998e+03	6.637e+04	6.631e+04	0.
3.240e+01	1.371e+07	9.344e+06	1.863e+04	1.550e+04	1.659e+04	1.658e+04	0.
3.300e+01	1.629e+07	1.121e+07	3.380e+04	2.943e+04	3.604e-23	1.827e-22	0.
3.360e+01	1.910e+07	1.325e+07	5.346e+04	4.780e+04	1.659e+04	1.658e+04	0.
3.420e+01	2.213e+07	1.545e+07	7.760e+04	7.059e+04	6.637e+04	6.631e+04	0.
3.480e+01	2.538e+07	1.783e+07	1.062e+05	9.781e+04	1.493e+05	1.492e+05	0.
3.540e+01	2.885e+07	2.038e+07	1.394e+05	1.295e+05	2.655e+05	2.652e+05	0.
3.600e+01	3.254e+07	2.309e+07	1.770e+05	1.655e+05	4.148e+05	4.144e+05	0.
3.660e+01	3.177e+07	2.258e+07	1.932e+05	1.836e+05	4.148e+05	4.144e+05	0.
3.720e+01	3.100e+07	2.208e+07	2.102e+05	2.025e+05	4.148e+05	4.144e+05	0.
3.780e+01	3.024e+07	2.158e+07	2.278e+05	2.224e+05	4.148e+05	4.144e+05	0.
3.840e+01	2.949e+07	2.109e+07	2.462e+05	2.432e+05	4.148e+05	4.144e+05	0.
3.900e+01	2.875e+07	2.060e+07	2.653e+05	2.649e+05	4.148e+05	4.144e+05	0.
3.960e+01	2.802e+07	2.012e+07	2.851e+05	2.876e+05	4.148e+05	4.144e+05	0.
4.020e+01	2.729e+07	1.965e+07	3.056e+05	3.112e+05	4.148e+05	4.144e+05	0.
4.080e+01	2.658e+07	1.918e+07	3.269e+05	3.357e+05	4.148e+05	4.144e+05	0.
4.140e+01	2.588e+07	1.871e+07	3.488e+05	3.612e+05	4.148e+05	4.144e+05	0.
4.200e+01	2.518e+07	1.825e+07	3.715e+05	3.875e+05	4.148e+05	4.144e+05	0.
5.200e+01	2.580e+07	1.863e+07	3.755e+05	3.902e+05	4.148e+05	4.144e+05	0.
6.200e+01	2.642e+07	1.902e+07	3.795e+05	3.929e+05	4.148e+05	4.144e+05	0.
7.200e+01	2.705e+07	1.941e+07	3.835e+05	3.955e+05	4.148e+05	4.144e+05	0.
8.200e+01	2.768e+07	1.980e+07	3.876e+05	3.982e+05	4.148e+05	4.144e+05	0.
9.200e+01	2.833e+07	2.020e+07	3.917e+05	4.009e+05	4.148e+05	4.144e+05	0.
1.020e+02	2.898e+07	2.060e+07	3.958e+05	4.036e+05	4.148e+05	4.144e+05	0.
1.120e+02	2.963e+07	2.100e+07	3.999e+05	4.063e+05	4.148e+05	4.144e+05	0.
1.220e+02	3.030e+07	2.141e+07	4.041e+05	4.090e+05	4.148e+05	4.144e+05	0.
1.320e+02	3.097e+07	2.182e+07	4.083e+05	4.117e+05	4.148e+05	4.144e+05	0.
1.420e+02	3.165e+07	2.224e+07	4.125e+05	4.144e+05	4.148e+05	4.144e+05	0.
1.430e+02	2.564e+07	1.801e+07	3.341e+05	3.357e+05	3.360e+05	3.115e+05	0.
1.440e+02	2.026e+07	1.423e+07	2.640e+05	2.652e+05	2.655e+05	2.233e+05	0.
1.450e+02	1.551e+07	1.090e+07	2.021e+05	2.031e+05	2.033e+05	1.497e+05	0.
1.460e+02	1.139e+07	8.006e+06	1.485e+05	1.492e+05	1.493e+05	9.077e+04	0.
1.470e+02	7.913e+06	5.560e+06	1.031e+05	1.036e+05	1.037e+05	4.651e+04	0.
1.480e+02	5.054e+06	3.558e+06	6.599e+04	6.631e+04	6.637e+04	1.691e+04	0.
1.490e+02	2.849e+06	2.001e+06	3.712e+04	3.730e+04	3.734e+04	1.973e+03	0.
1.500e+02	1.266e+06	8.895e+05	1.650e+04	1.658e+04	1.659e+04	1.697e+03	0.
1.510e+02	3.165e+05	2.224e+05	4.125e+03	4.144e+03	4.148e+03	1.608e+04	0.
1.520e+02	1.367e-20	3.404e-19	4.505e-20	7.469e-20	1.298e-21	4.513e+04	0.

Time zone 1 current derivative, m = 1 through 10

```
     dt = seqti(1)/9
do 80     i = 1, ncirt
          dcoili(i) = [cpt(i,2) - cpt(i,1)]/seqti(1)
```

Time zone 2 current derivative, m = 11 through 20

```
     dt = seqti(2)/10
do 100     i = 1, ncirt
           dcoili(r) = [cpt(i,3) - cpt (i,2)]/seqti(2)
```

Time zone 3 current derivative, m = 21 through 30

```
do 120     similar to time zone 2
```

Time zone 4 current derivative, m = 31 through 40

```
do 140     similar to time zone 2
```

Time zone 5 current derivative, m = 41 through 50

```
do 160     similar to time zone 2
```

- Calculate mutually induced voltages in each circuit.

```
do 180     sv(i) = 0 initialize
do 190     sv(i) = sv(i) + sxℓg(i,i)*dcoil(j)
           sumv(i) = sv(i) - sxℓg(i,j)*dcoili(i)
           i = 1, ncirt, j = 1, ncirt
           sv(i) = mutually induced voltages + self-induced voltage
                   in circuit (i)
           sumv(i) = mutually induced voltages in circuit (i)
           sxℓg(i,j) = inductance matrix of coils
           dcoili(i) = derivative of current in circuit (i)
```

- Compute current, voltage, power, and energy.

```
do 200     i = 1, ncirt      (x = 0.1)
```

Current in the ith circuit, (a function of time)

```
coil(i) = coil(i) + dcoili(i)*dt*x
coili(i) = coil(i), amps
```

Voltage and resistance losses of the ith circuit (a function of time)

```
vep(i) = sxlg(ii)*dcoili(i) + sumv(i)
         + coili(i)*[resn2(i) + busr(i)], volts
resℓos(i) = [coili(i)]^2*[rsn2(i) + busr(i)], watts
   resn2(i) resistance of coil (i)
```

Power supply watts and joules

```
w(i) = vep(i)*coili(i)      power, watts
e(i) = e(i) + w(i)*dt*x     energy, joules
```

- Set up matrix for the option of printing the above variables as a function of time (m) = t. Shift columns one to the right to allow for printing time in the first column. (Every tenth value is stored for printing, KK = 10.)

```
do 220     i = 1, ncirt + 1
voltage, vv(m, i + 1) = vep(i)
current, current (m, i + 1) = coili(i)
ps watts, ww (m, i + 1) = w(i)
ps energy, ee (m, i + 1) = e(i)
ckt loss, rloss (m, i + 1) = reslos(i)
sum all ps energies:  sume(m) = sume(m) + e(i)
sum all ps watts:  sumw(m) = sumw(m) + w(i)
absolute sum of ps watts:  asumw(m) = abse [asumw(m)]
ps = power supply total
Set first entry of matrices for printing time in column 1.
   voltage, vv(m,1) = t
   current, curent (m,1) = t
   ps watts, ww(m,1) = t
   ps energy = ee(m,1) = t
   ckt losses, rloss (m,1) = t
Set last column of vv, ww, and ee to print plasma voltage and
the sum of the circuit values of a row in last column.
   vv(m,ncirt + 1) = - sumv(ncirt)        (plasma)
   ww(m,ncirt + 1) = sumw(m)
   ee(m,ncirt + 1) = sume(m)
This is the end of the outer "do" loop 230.
   gj = 0, initialize maximum sum of all ps energies, sume(m)
   wm = 0, initialize maximum sume of all ps watts, asumw(m)
Select the largest value of power supply current, watts, and joules
and calculate sum for all pf coil circuits.
   do 250     j = 1, ncirt - 1
      amp (j) = 0, initialize largest current in circuit (j)
```

```
va(j) = 0, initialize largest va in circuit (j)
sjoule(j) = 0, initialize largest energy in circuit (j)
do 240     m = 1,29 assumes max occurs before the burn phase
   damp = amp(j) - abs[current(m,j + 1)]
   dva = va(j) - abs[ww(m,j + 1)]
   dgj = gj - sume(m)
   dmw = wm - asumw(m)
   djoule = sjoule(j) - ee(m,j + 1)
```

Difference between tentative maximum and successive array values

If (damp. LT. 0.0) amp(j) = abs [current(m,j + 1)] (typical statement for obtaining the maximum value of a variable. There are six of these statements in "do" loops 240 and 250.

- Note: amp(j) is the largest current (current) in circuit j,
  va(j) is the largest volt-amps (ww) in circuit j,
  sjoul(j) is the largest energy (ee) of circuit j,
  gj is the largest sum of energies (sum) in all the PF coil circuits, and
  wm is the largest sum of the power (asumw) in all the PF coil circuits.
- Assign variables to the values of energy and power at the end of the third, fourth, or fifth time zones for determining MGF requirements.

  emjus = ee(29, ncirt + 1) end of 3rd time zone
  emjbn = ee(39, ncirt + 1) end of 4th time zone
  emjsd = ee(49, ncirt + 1) end of 5th time zone
  bpsmwt = ww(39, ncirt + 1) end of 4th time zone
  psumwt = wm change of variable for maximum summation of watts
- MGF energy storage requirements for startup (gmjsu) less that recovered during shutdown (gmjsd), megajoules.

  emjah = (pnb + xcbhp + plhbh)*seqti(3)*1E6 (plasma heating, joules)
  pnb = neutral beam dc power, megawatts
  xcbhp = ICRH prime dc power, megawatts
  plhbh = LHRH prime dc power, megawatts
  seqti(3) = plasma heating time internal, seconds (startup)
  gmjsu = (emjus/eff1 + emjah/eff2)*1E - 6, mj

emjus/eff1 = stored energy for PF coils, joules

emjah/eff2 = stored energy for plasma heating, joules

eff1 = 0.8 = ac-to-dc conversion efficiency for the PF coil

eff2 = 0.8 = ac-to-dc conversion efficiency for the plasma heating system

- PF coil energy recovered during the shutdown phase (gmjsd).

  gmjsd = (emjbn - emjsd)*eff3*1E - 6, mj

  eff3 - 0.7 is the energy recovery efficiency

- AC power needed for the MGF system (mgmake), mw.

  mgmake = (gmjsu - gmjsd)/eff4/time(49)

  eff4 = 0.75 is the MGF and ac power transmission efficiency

  time (49) is the total cycle time available for restoring the MGF to full energy storage capacity.

- Building floor space and volume for the PF coil power conversion system. Building floor space PFCFSP, square meters

$$PFCFSP = 150(T_2 + T_3 + T_5)/ \sum_{j=1}^{5} Tj \ *[psumwt/1E6]^{0.67}$$

$$+ \ 150 \ T_4/ \sum_{j=1}^{5} Tj \ *[BPSMWT/1E6]^{0.67}$$

$$+ \ 5[EMJUS/1E6]^{0.67}$$

Ti = 5eqti(i) is the time interval for sequence i,

i = 1 through 5

Building volume (PFCBV), cubic meters

PFCBV = 10*PFCFSP

- Building floor space (ESPSPM) and volume (MGBV) for the MGF system.

  $ESPSPM = 3.3(PSUMWT/1E6)^{0.67} + 1.2(GMJSU)^{0.67}$, square meters

  $MGBV = (ESPSPM)^{1.5}$ cubic meters

- Find maximum resistive loss for each PF coil circuit (maxlos).

  do 270 icol = 1, ncirt - 1

  do 270 irow = 1,49 (time values)

```
if (irow.eq. 1) maxlos (icol) = rloss (irow, icol + 1) - initialize
if [rloss(irow, icol + 1).gt. maxlos (icol)]
  maxlos[(icol = rloss (irow, icol + 1)]
do 280     i = 1, ncirt - 1
  maxlos(i) = maxlos(i)*1E - 6, convert from watts to megawatts
```

- Determine the sum of losses in all PF coil circuits, (sumlos), then find the maximum of the sum of the losses (summax).

```
do 300 irow = 1,49
do 290 icol = 2,ncirt
   sumlos (irow) = sumlos(irow) + rloss (irow, icol)
   (sum of data by row in colums 2 through ncirt)
if (irow.eq. 1) summax = sumlos(irow) - initialize
if [sumlos(irow).gt. summax] summax = sumlos (irow)
   summax = summax*1E - 6, convert from watts to megawatts
```

- Determine cost of the energy storage system (ES, $ million).

```
   gj = gj*1E - 9, convert maximum of sum of the energies (sume)
                   to gigajoules
vam = (w,/0.7)*1E - 6/0.8, calculate maximum ac MVA from the MGF sets,
                           assuming power factor = 0.7 and efficiency
                           of power conversion is 0.8.
```

$es = 1.2(0.005\ vam + 0.025\ vam^{0.8} + 1.8\ (gj)^{0.8}$

- Convert the largest current, volt-amps, and energy is circuit (j) to kA, MVA, and MJ for output file.

```
do 310     j = 1, ncirct - 1
           amp(j) = amp(j)/1000              , KA
            va(j) = [va(j)/0.7]*1E - 6/0.8   , MVA
    310 sjoule(j) = sjoule(j)*1E - 6         , MJ
```

- Determine the maximum value of current, volt-amps, and energy during the burn phase (m = 30 through 39) for each PF coil circuit.

```
do 330     j = 1, ncirt - 1
     bamp(j) = abs[curent(30,j + 1)]
      bva(j) = abs[ww(30,j + 1)]
   bjoule(j) = ee(30,j + 1)
```

Setting initial values of burn phase amps, volt-amps, and joules for determining the maximum

```
do 320     m = 30, 39   (search for maximums)
    dbamp = bamp(j) - abs[current(m,j + 1)]
      dba = bva(j) - abs[ww(m,j + 1)]
   dbjoul = bjoule(j) - ee(m,j + 1)
if (damp.lt. 0.0) bamp(j) = abs[current(m,j + 1)]
if (dba.lt. 0.0) bva(j) = abs[ww(m,j + 1)]
if (dbjoul.lt. 0.0) bjoule(j) = ee(m,j + 1)
```

- Convert maximum burn phase amps, volt-amps, and joules to kA, MVA, and MJ for all PF coil circuits.

```
do 340     j = 1, ncirt - 1
    bamp(j) = bamp(j)/1000
     bva(j) = bva(j)*1E - 6
   bjoul(j) = [bjoul(j) - ee(29, j + 1)]*1E - 6
```

The last equation gives the additional energy needed during the burn phase taken from the utility line.

- Cost of PF coil power conversion for the jth circuit, costps(j), $ million and total power conversion cost, tcost ($ million).

```
do 350     j = 1, ncirt - 1
   costps(j) = cva(j)*va(j) + c2p(j)*sjoul(j)
             + cbi(j)[busL(j)*amp(j) + cbz(j)bva(j)
             + clp(j)*cai(j)
   350 tcost = tcost + costps(j)
      gtcost = tcost + es     total cost of energy storage system and
                                PF conversion equipment ($ million)
      cva(j) = 0.02
      c2p(j) = 0.001
      cbi(j) = 3.58 x 10^-5   For all j circuits see input file elein
      cbz(j) = 0.10             of Table 35.
      clp(j) = 0.05
      cai(j) = 1.3
     busL(j) = 240
```

Table 35. Input cost coefficient data and buss length

```
***** electric power PF coil input data
*                    for each PF circuit j
*  cva(j)                unit cost of startup power converters   mega-dollars/mva
*  c2p(j)                unit cost of protection equipment       mega-dollars/mj
*  cbi(j)                cost of bussing                         mega-dollars/m-Ka
*  cbz(j)                unit cost of burn power supplies        mega-dollars/mva
*  clp(j)                cost of instrumentation                 mega-dollars
*  cai(j)                factor to multiply total cost by
*  busl(j)               buss length                             m
*&elein
 cva=12(.02),8(.0),
 c2p=                        12(.001),        8(0.),
 cbi=                        12(3.584e-5),    8(0.),
 cbz=                        12(.10),         8(0.),
 clp=                        12(.05),         8(0.),
 cai=                        12(1,3),         8(0.),
 busl=                       12(240.),        8(0.),
elewrt=1
*&endelein
```

Note: elewrt is a print option index. If elewrt = 1, all output data of the code are printed out. If elewrt = 0, the time dependent data are omitted from the printout.

CODE MODULE FLOW DIAGRAM

The flow diagram of the code module is given in Figs. 67–75. Successive figures are connected with small circles containing lower-case continunity letters. Each figure also contains some mnemonics on the left that correlate the flow diagrams with the code listing and equations defined above. The feedback loops in the figures are DO loops identified with numbers as they appear in the listing and the equations above. The functions performed by each loop are given in function blocks within the loop. There are many loops given in Figs. 67–71 that lie within two major loops chosen with continuity letters (c) and (d). The flowcharts in the figures, together with the equations listed above and the code module listing, are self-explanatory.

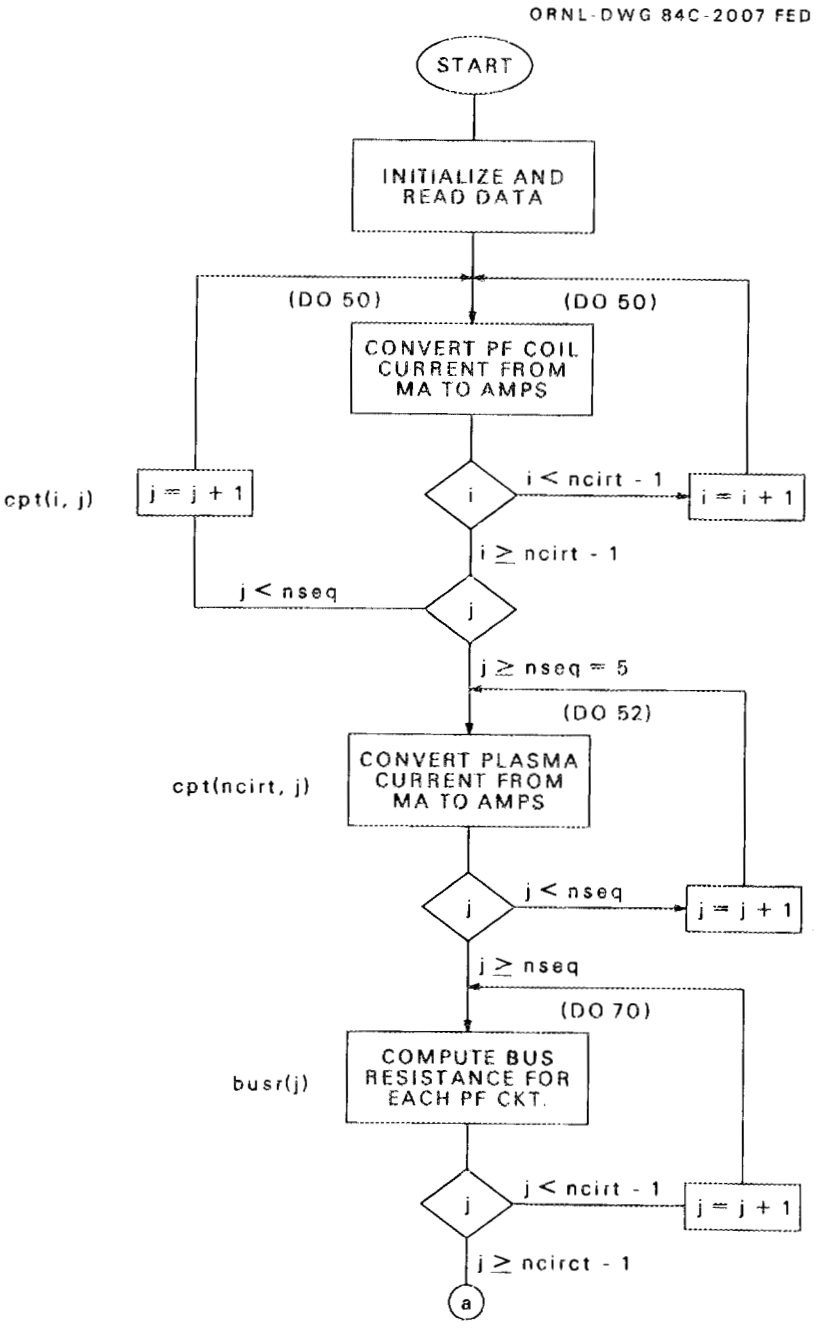

Fig. 67. ELEPOW code flow diagram (sheet 1 of 9).

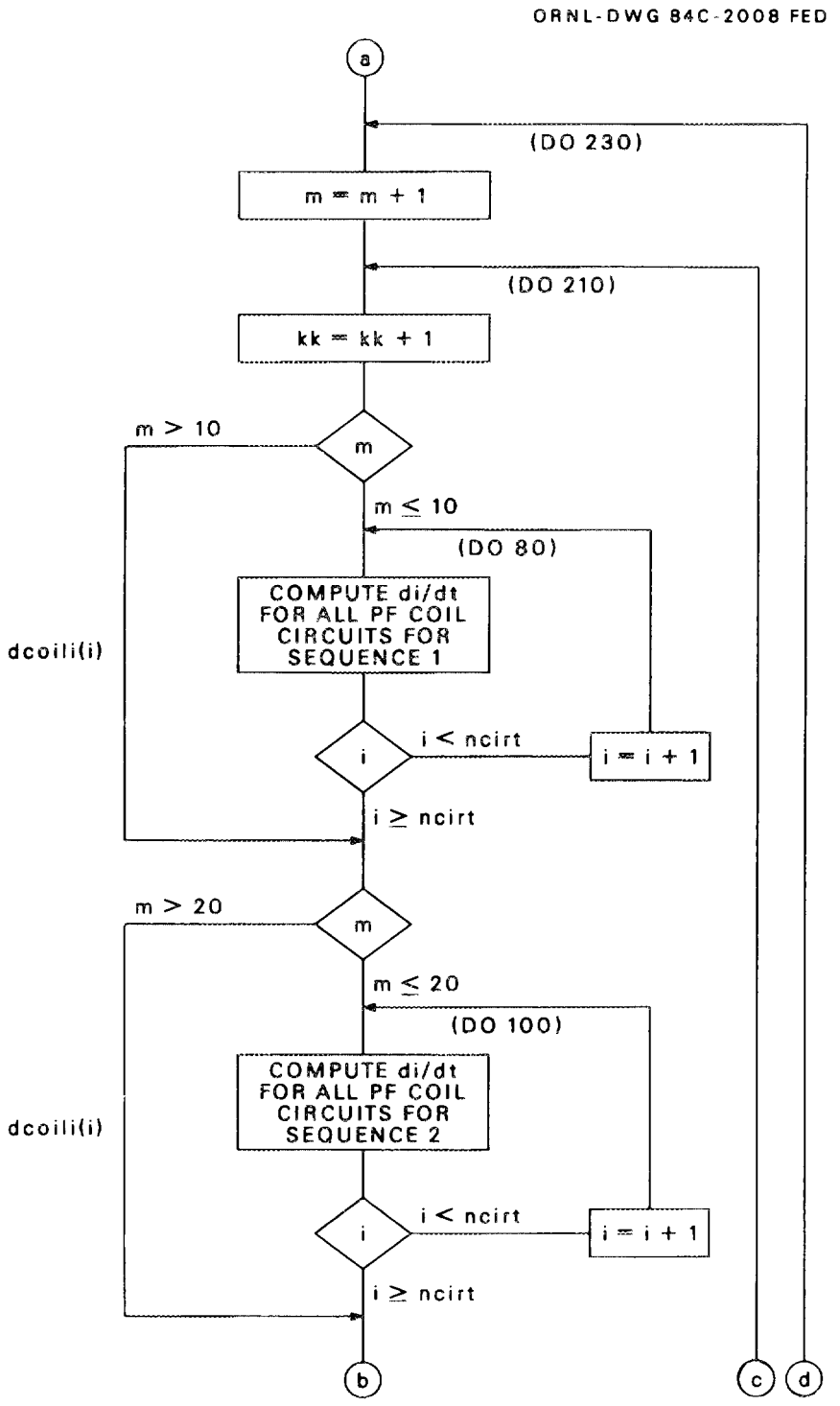

Fig. 68. ELEPOW code flow diagram (sheet 2 of 9) (beginning of major DO loops 210 and 230).

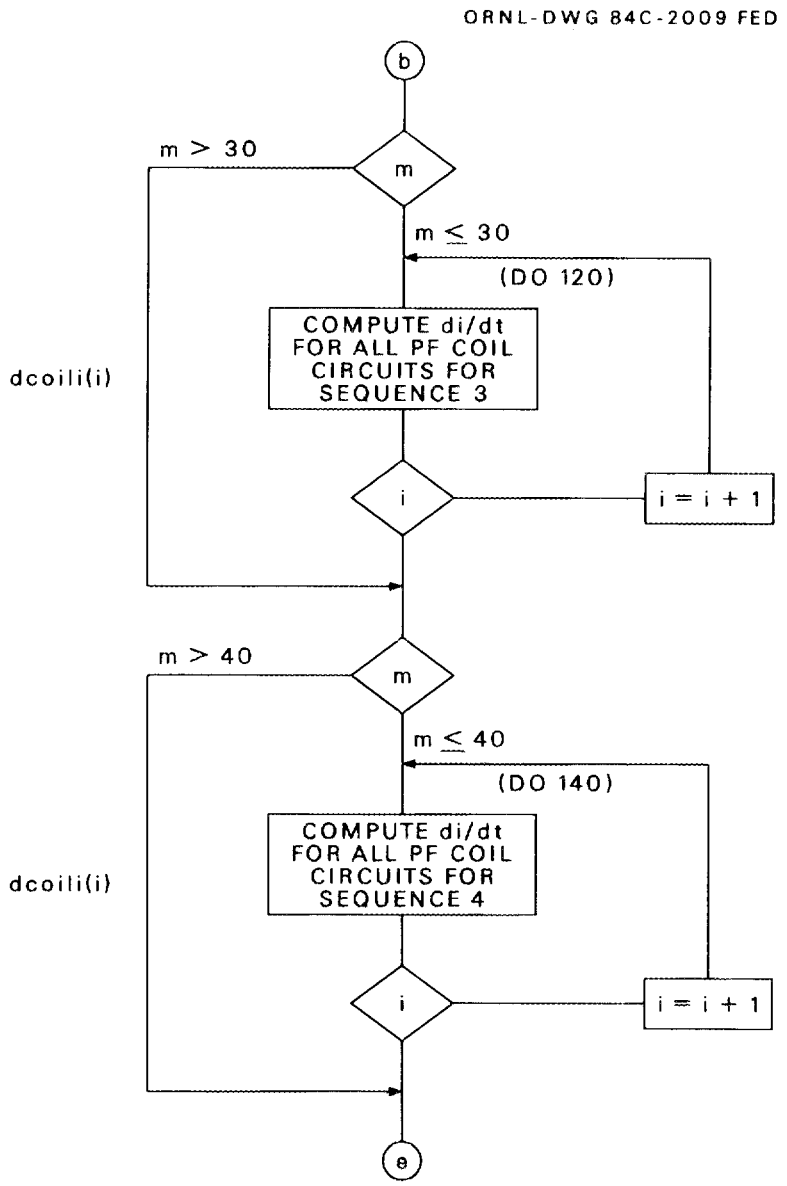

Fig. 69. ELEPOW flow diagram (sheet 3 of 9) (inside of DO loops 210 and 230).

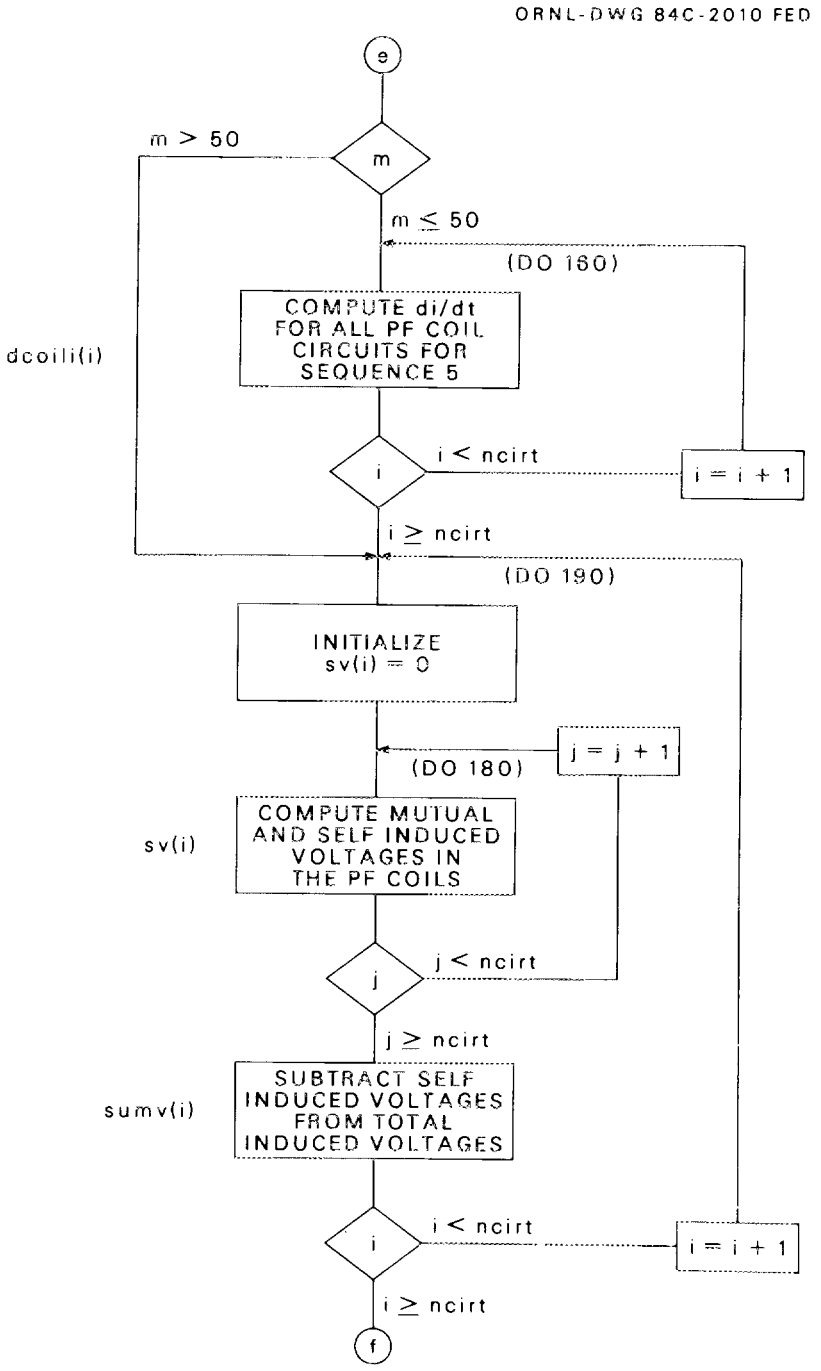

Fig. 70. ELEPOW code flow diagram (sheet 4 of 9) (inside of DO loops 210 and 230).

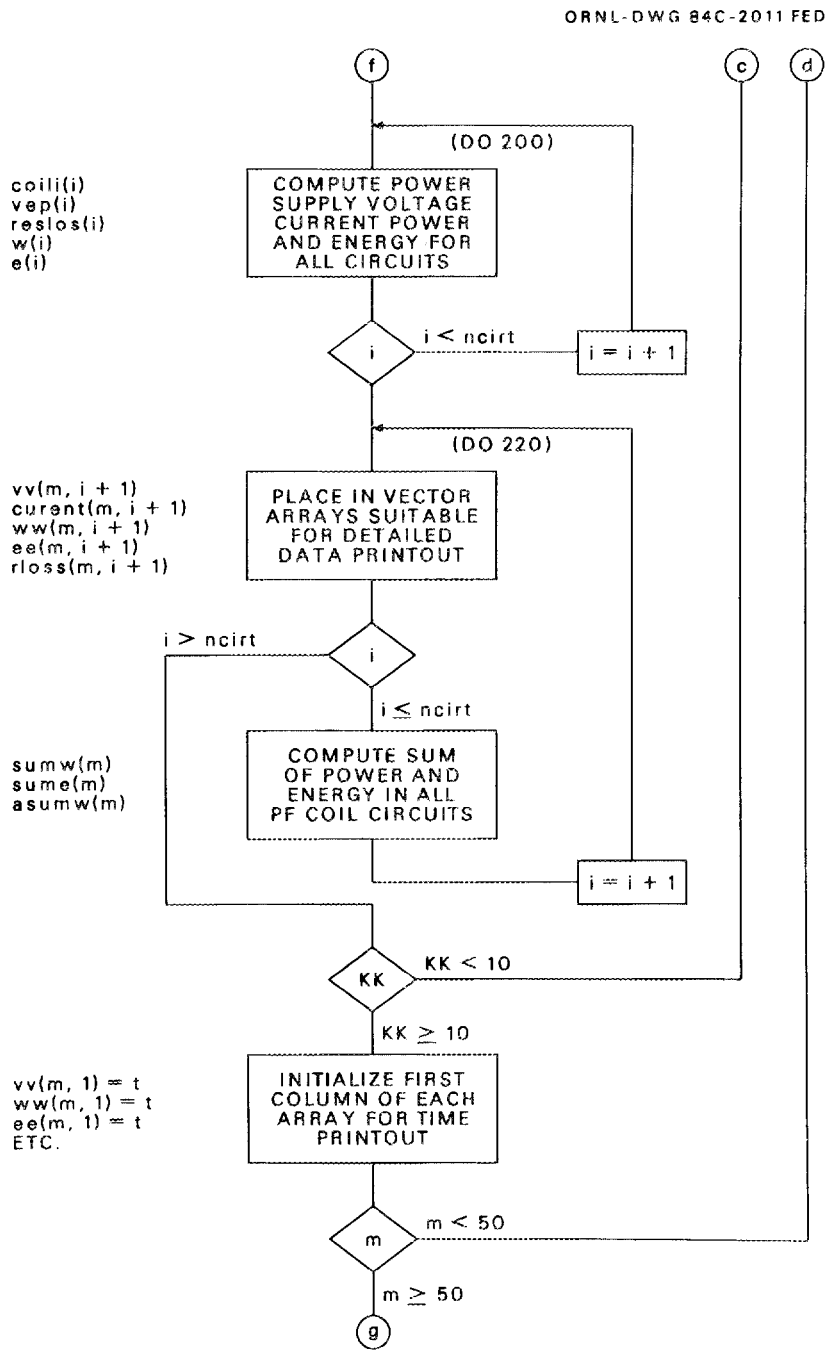

Fig. 71. ELEPOW code flow diagram (sheet 5 of 9) (end of major DO loops 210 and 230).

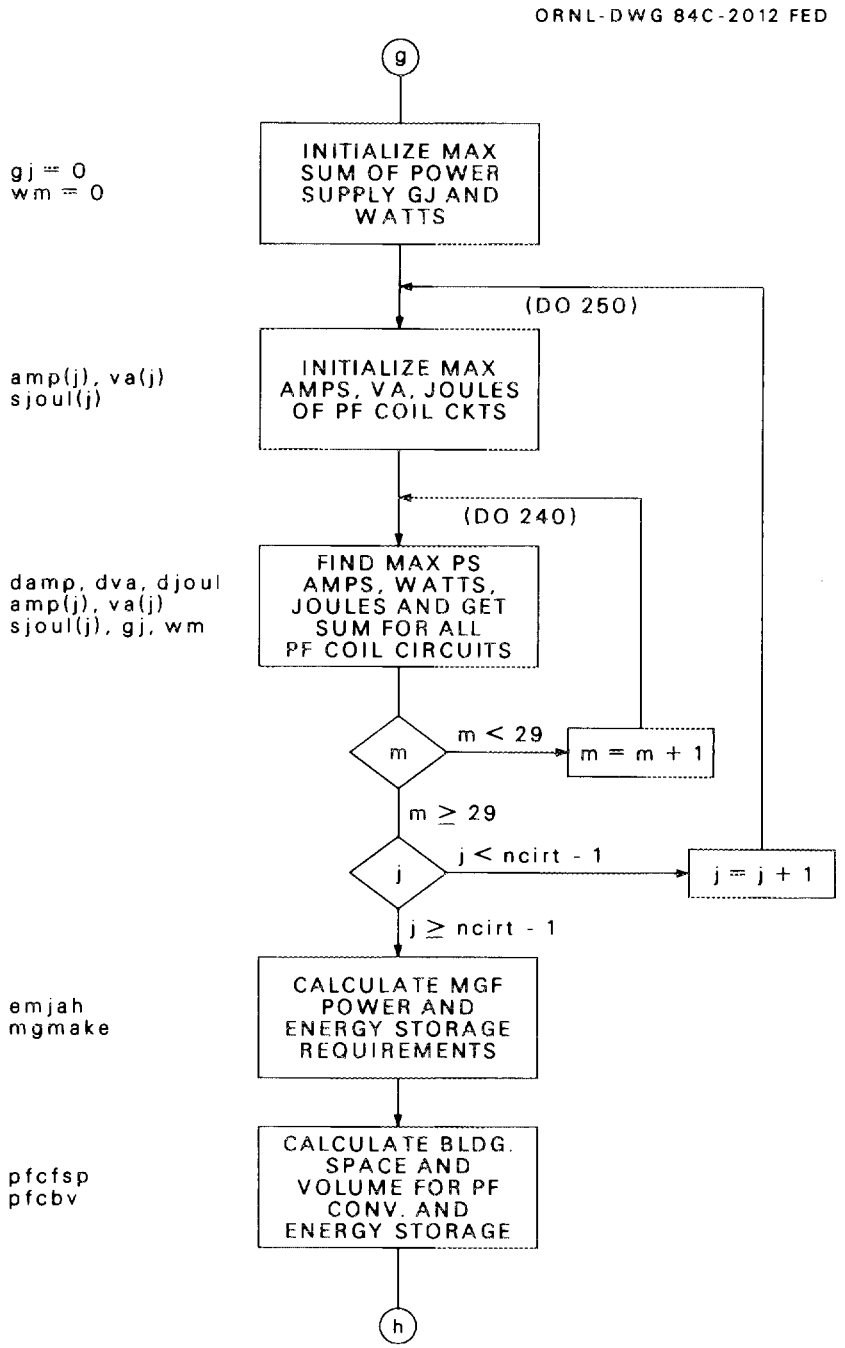

Fig. 72. ELEPOW code flow diagram (sheet 6 of 9).

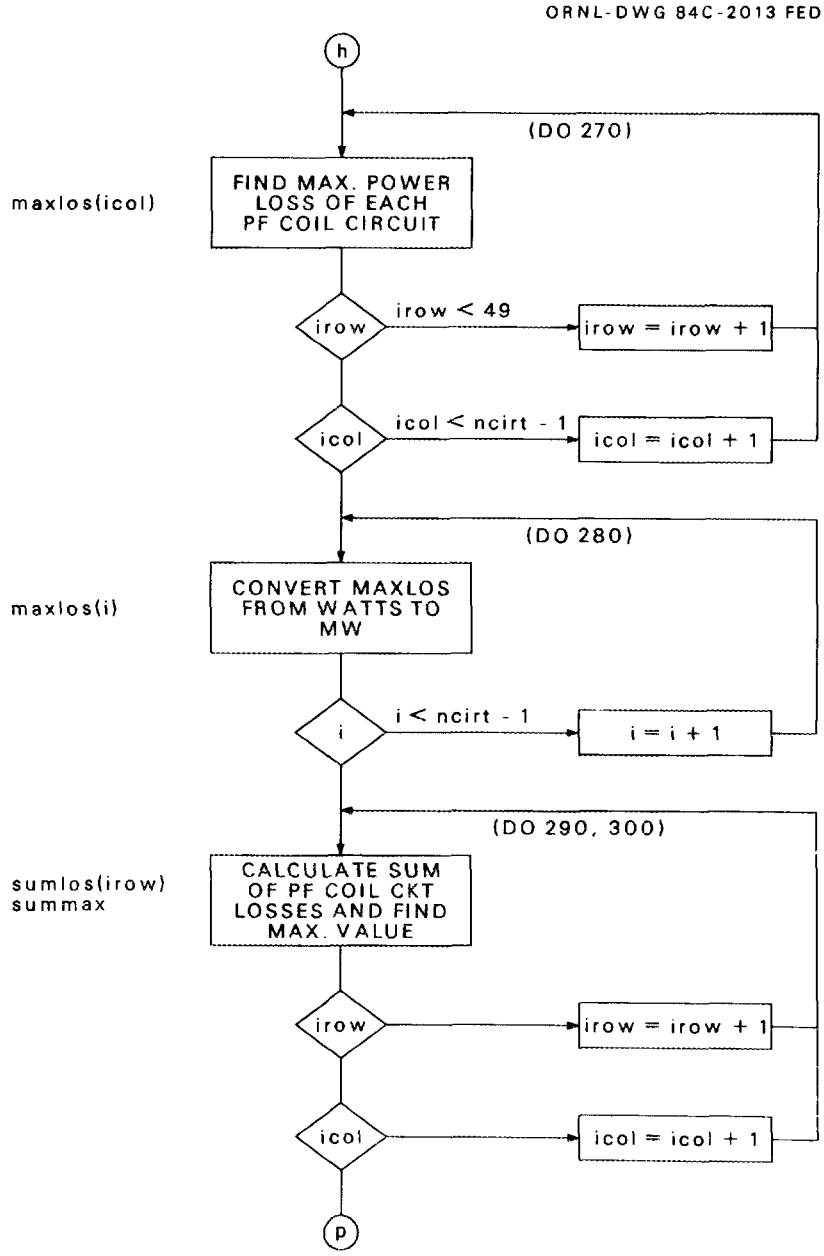

Fig. 73. ELEPOW code flow diagram (sheet 7 of 9).

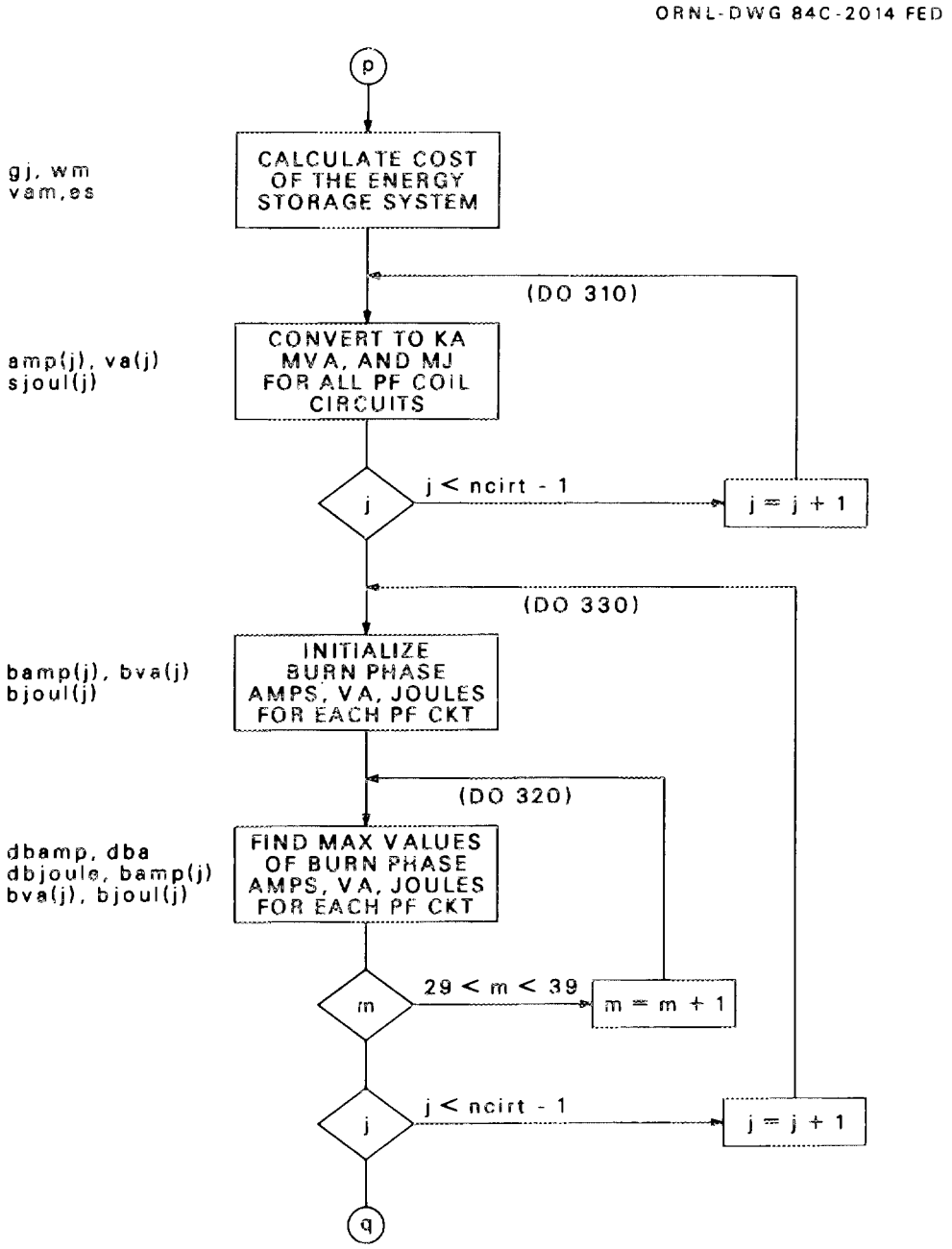

Fig. 74. ELEPOW code flow diagram (sheet 8 of 9).

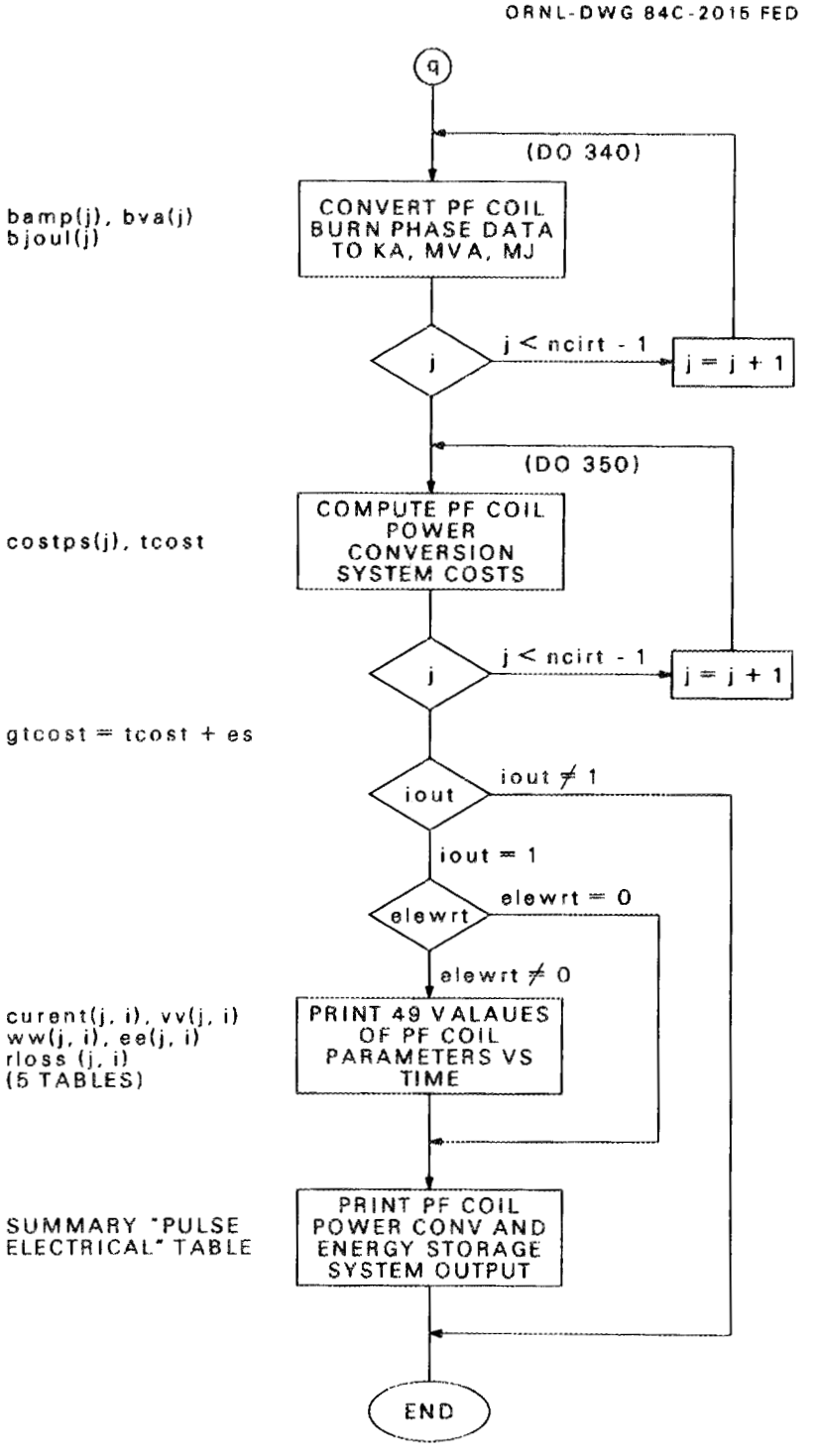

Fig. 75. ELEPOW code flow diagram (sheet 9 of 9).

10. REACTOR CELL

(Reactor Building Module for the TSC)

REACEL (REACTOR BUILDING MODULE)

The reactor building module, REACEL, determines the size of the reactor building and hot cell facility and the thickness of the reactor building walls required for biological shielding. The building may be either cylindrical or rectangular, depending on input option. The size may be input directly, or it may be calculated using device dimensions calculated in other modules and passed to the reactor building module together with supplemental input information. This supplemental input information provides dimensions of device components and maintenance operations which are not currently calculated within the TSC.

The wall thickness is based on biological shielding and is approximated by a simple e-folding distance. Credit for the reactor shield is obtained by taking the neutron flux outside the shield as input. The input e-folding distance and flux outside the wall correspond to ordinary concrete and 1 mrem/h.

ASSUMPTIONS AND CONSTRAINTS

If the option to allow the scaling of the reactor building or hot cell facility is selected, the assumption is made that the building arrangement is similar to the FED design given in ref. 1. If this arrangement is not satisfactory, either the rectangular dimensions or volume of the building may be input directly. The unit cost of the buildings is input in dollars per cubic meter ($\$/m^3$).

INPUT DESCRIPTION

The variables used by the REABLG module are shown in Table 36. For additional discussion of the arrays used to input and store building information, Appendix 15 on the FACIL module should be reviewed. If options are selected that do not require certain input data, those input values are ignored by the program.

Table 36. Reactor building input parameters

Symbol	Description	Units	Source[a]
REB(1)	building length or radius	m	U
REB(2)	building width	m	
REB(3)	building height	m	
REB(4)	building volume	m^3	
REB(5)	building floor area	m^2	
REB(6)	unit cost	$\$/m^3$	
REB(7)	option control parameter		
DOSE	neutron flux to the environment	W/m^2	
ATTEN	e-folding distance of the building walls	m	
ROW	right-of-way for component and equipment movement (may be negative)	m	
TRCL	transport clearance needed between components and structure	m	
EXT	extension of components beyond the vacuum pump hatch	m	
HATCH	clearance beyond the basic machine radius needed for vacuum pump hatch	m	
STCL	structural clearance for the roof supports	m	
CRHT1	height from the top of the TF coil to the cryostat top	m	
CRHT2	height from the top of the TF coil to the cryostat top	m	
FNDTK	foundation thickness	m	
BCYLHT	bucking cylinder height	m	
TFHMAX	TF coil half maximum height	m	U
X1(i)	location in the X-direction of TF coil inboard surface points	m	C
TFTHK	thickness of a TF coil	m	
DDW	cryostat thickness	m	
TOX(i)	location, in the X-direction of torus outer surface points	m	
FLLDO	neutron flux through TF outer dewar	neutrons/ m^2-s	
TFNO	number of TF coils		
PFR	the largest radius of all REB(I)	m	C

[a]Source: U = Input is supplied by user.
C = Input flows in from other modules.

REACTOR BUILDING CALCULATIONAL METHOD AND GOVERNING EQUATIONS

Two calculational paths are available, and selection is triggered by the input data for REB(7). If this parameter is an asterisk (*), then a cylindrical building using supplemental information is calculated. If this parameter is a number sign (#), then a rectangular building using supplemental information is calculated. Any other symbol for this parameter directs the program to use the input information, REB(1) through REB(6), for all reactor building calculations.

If the option control parameter REB(7) is neither * nor #, then REB(1) and REB(2) are checked. A positive value for both REB(1) and REB(2) indicates a rectangular building, and the following relationships apply:

$$\text{Volume} = \text{REB}(4) = \text{REB}(1) \times \text{REB}(3) \ , \tag{1}$$

and

$$\text{Foundation Area} = \text{REB}(5) = \text{REB}(1) \times \text{REB}(2) \ . \tag{2}$$

If REB(1) has a positive value and REB(2) is zero or negative, then a cylindrical building is indicated, and

$$\text{Volume} = \text{REB}(4) = \pi \times [\text{REB}(1)]^2 \times \text{REB}(3) \tag{3}$$

and

$$\text{Foundation Area} = \text{REB}(5) = \pi \times [\text{REB}(1)]^2 \ . \tag{4}$$

If both REB(1) and REB(2) are less than or equal to zero, then REB(4) is checked. If REB(4) is also zero or negative, the program prints the message that insufficient information is available to calculate reactor building volume and costs. If REB(4) is a positive value, it is used without further calculations.

In the cases where dimensions are not calculated, the rectangular building wall thickness is calculated from

$$\text{Flux at the wall} = \text{FLXCW} = \text{FLLDO} \times [\text{TOX}(5)]^2/[\text{REB}(2) - \text{RCTK}]^2 \tag{5}$$

and

$$\text{Wall thickness} = \text{RCTK} = \text{ATTEN} \times \ln(\text{FLXCW}/\text{DOSE}) \ . \tag{6}$$

For a cylindrical building, Eq. (5) becomes

$$\text{Flux at the wall} = \text{FLXCW} = \text{FLLDO} \times [\text{TOX}(5)]^2/[\text{REB}(1) - \text{RCTK}]^2 \ . \quad (7)$$

The program then iterates on these two equations [(5) and (6) or (6) and (7)] until RCTK converges.

Calculations Using Supplemental Information

If the option control parameter REB(7) is either * or #, supplemental input building description information is used to calculate the building size. Figure 76 shows the geometric relationship of the various parameters. The calculations and basis for both cylindrical and rectangular buildings are closely parallel and differ only where geometry must be applied. Both sizes are determined by a series of concentric rings representing clearance for various device components and maintenance operations, together with an off-center ring to allow for PF coil laydown area. The various dimensions are determined as follows:

$$\text{Basic machine radius} = \text{BMR} = \text{TFOUTR} \quad (8)$$

or

$$\text{BMR} = \text{PFR} \ , \quad (9)$$

depending on which is larger, TFOUTR or PFR. The TF coil radius is determined from

$$\text{TFOUTR} = \text{X1}(1) + \text{TFTHK} + \text{DDW} \ , \quad (10)$$

where X1(1), TFTHK, and DDW are also passed from other modules.

The sector width is calculated as

$$\text{SECTRW} = 2 \times \text{TOX}(5) \times \text{SIN}(\pi/\text{TFNO}) \ , \quad (11)$$

where TOX(5) and TFNO are obtained from other modules.

The sector length is

$$\text{SECTRL} = \text{TOX}(5) - \text{TOX}(1) \ . \quad (12)$$

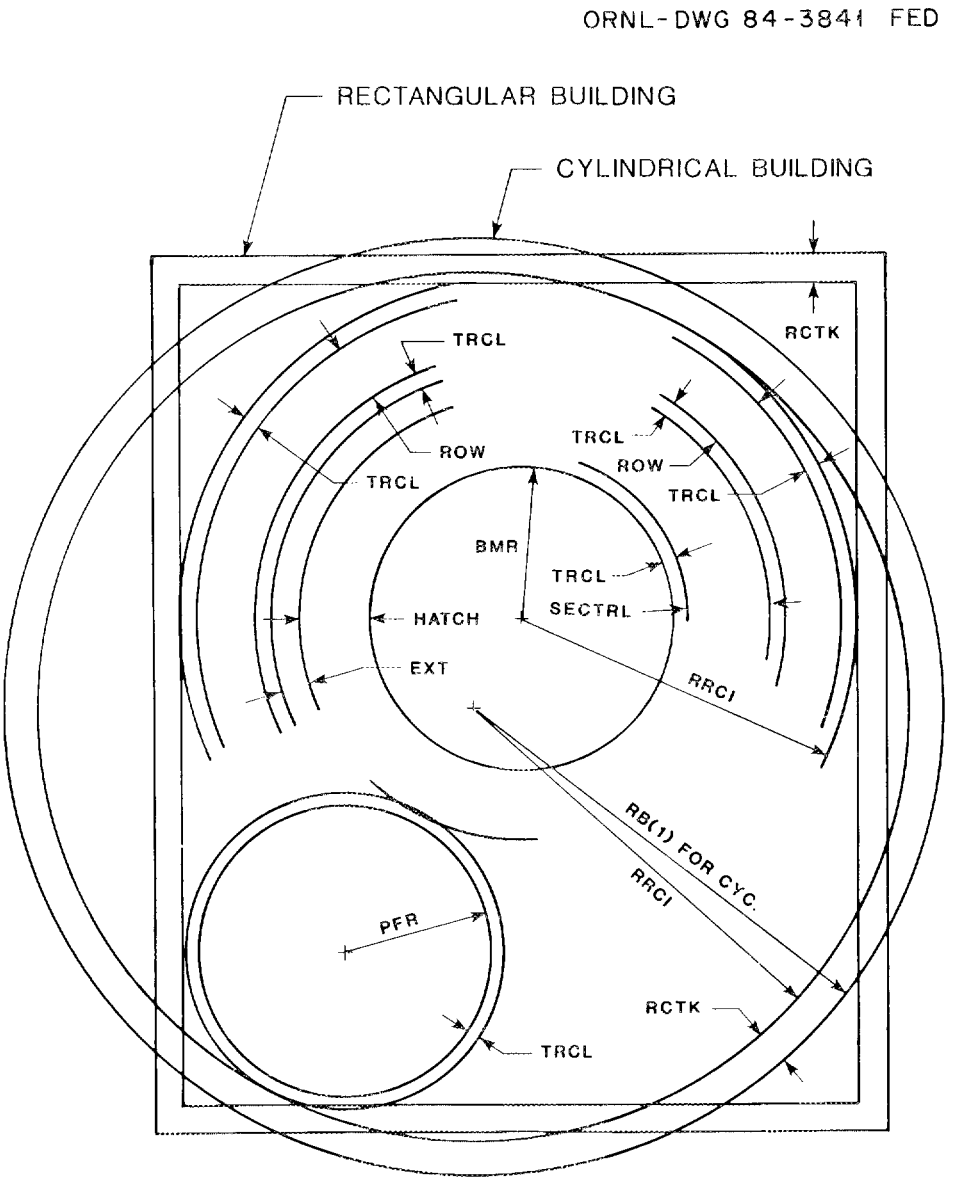

Fig. 76. Relationship of reactor building dimensions.

If ROW is input as less than zero, then

$$ROW = SECTRW \ . \tag{13}$$

The distance to the closest inside wall is now determined to be the largest of

$$RRCI = BMR + EXT + HATCH + ROW + 2 \times TRCL \tag{14}$$

or

$$RRCI = BMR + SECTRL + 2 \times TRCL + ROW \ . \tag{15}$$

The reactor building wall thickness is determined from the estimated neutron flux and expected attenuation of concrete. The flux to the inside of the wall is calculated by

$$FLXCW = [FLLDO \times TOX(5)]^2/(RRCI^2) \ . \tag{16}$$

The wall thickness then becomes

$$RCTK = ATTEN \times \ln(FLXCW/DOSE) \ , \tag{17}$$

where ATTEN and DOSE are input parameters.

At this point, the program is ready to calculate the dimensions of the building. For a rectangular building, the width becomes

$$REB(2) = 2 \times RRC1 + 2 \times RCTK \ . \tag{18}$$

The length requires determining the distance between the center of the device and the center of the PF coil laydown area. This distance is taken as the largest of

$$HY = BMR + HATCH + PFR + TRCL \tag{19}$$

or

$$HY = BMR + SECTRL + PFR + TRCL \ . \tag{20}$$

Then,

$$REB(1) = 0.5 \times REB(2) + PFR + TRCL + RCTK + HY \times \sin\{\cos^{-1} [REB(2) \times 0.5 - PER - TRCL]/HY\} . \quad (21)$$

For a cylindrical building, the radius is calculated from an average of two different radii. The smallest radius from the device center to the wall is the largest of

$$RMIN = BMR + 2 \times TRCL + ROW + HATCH + EXT \quad (22)$$

or

$$RMIN = BMR + 2 \times TRCL + ROW + SECTRL . \quad (23)$$

The largest distance from the device center to the wall is the largest of

$$RMAX = BMR + 2 \times PFR + 2 \times TRCL + HATCH \quad (24)$$

or

$$RMAX = BMR + 2 \times PFR + 2 \times TRCL + SECTRL . \quad (25)$$

The building radius then becomes

$$REB(1) = (RMIN + RMAX)/2 + RCTK . \quad (26)$$

For the height calculation of both building types, the bucking cylinder height is first determined. If BCYLHT is input as less than zero, then it is set equal to the TF coil height, that is,

$$BCYLHT = 2 \times TFHMAX . \quad (27)$$

The building height then becomes

$$REB(3) = BCYLHT + CRCL + STCL + RCTK + TRCL + 2 \times TFHMAX + CRHT1 + CRHT2 + ENDTK , \quad (28)$$

where CRCL = CRANE(1.1 × SECTWT).

The CRANE function calculates the clearance needed for an overhead crane as a function of the maximum load to be lifted.

$$\text{CRANE (wt)} = 9.41e\text{-}6 \times \text{WT} + 5.1 \ , \tag{29}$$

where

WT = weight to be lifted in kilograms.

Since no dome height is added for cylindrical buildings, input of the structural clearance, STCL, should be adjusted to allow for a dome, if required.

HOT CELL FACILITY CALCULATION METHOD

The method of scaling the hot cell facility is to scale the dimensions from this design shown in Fig. 77, which was taken from ref. 2. The size is scaled based on changes in the shield sector size. This option is involved when HCF(7) is an asterisk (*). Each different area of the hot cell facility is handled separately, as shown below.

Hot Cell

HCLEN = 57 m + 3(SECTL - 5.0 m)

HCWID = 26 m + 2(SECTL - 5.0 m)

HCHT = SECTH + 1 m + CRANE(1.1 × SECTWT) + CRANE(0.1 × SECTWT) + 4 m

HCVOL = HCLEN × HCWID × HCHT

Decontamination Cell

DCLEN = 26 + 2(SECTL - 5.0 m)

DCWID = HCWID

DCHT = SECTH + 1 m + CRANE(1.1 × SECTWT)

DCVOL = DCLEN × DCWID × DCHT

ORNL-DWG 82-3748 FED

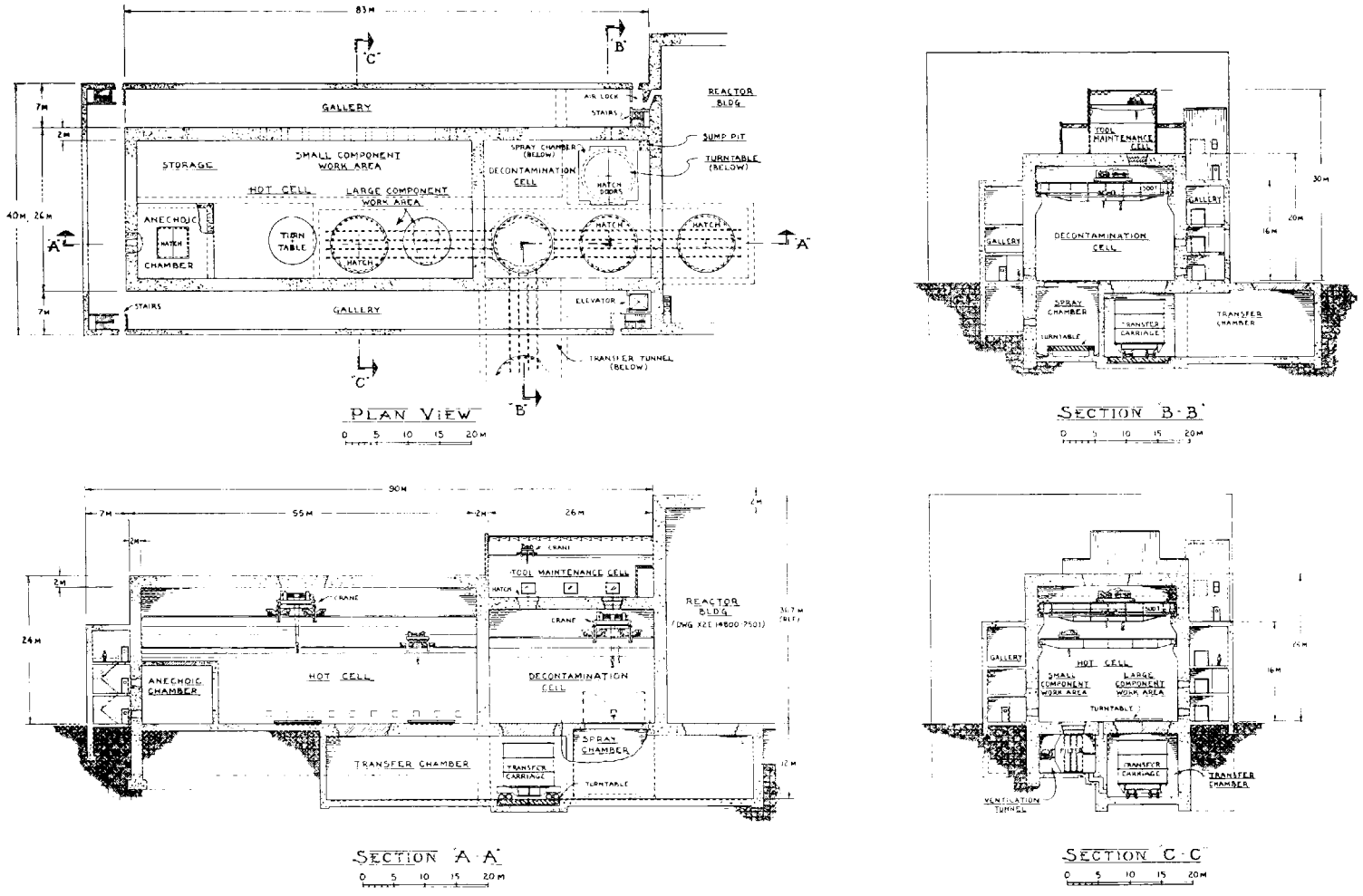

Fig. 77. Hot cell facility layout.

Gallery

GAHT = 16 m

GAWID = 7 m

GALEN = 2(HCLEN + DCLEN) + HCWID + 14

GAVOL = GAHT × GAWID × GALEN

Tool Maintenance Cell

TMCLEN = 26 m

TMCWID ≅ 0.75 × HCWID

TMCHT = 10 m

TWCVOL = TMCLEN × TMCWID × TMCHT

Transfer Chamber

TRNLEN = 53 m + 4(SECTL - 5.0 m) (only in HCF, not REB share)

TRNWID = 15 m + (SECTL - 5.0 m)

TRNHT = 11 m + (SECTH - 7.3 m)

TRNVOL = TRNLEN × TRNWID × TRNHT

Ventilation and Filter Space

VENLEN = HCLEN

VENLEN = HCWID - TRNWID

VENHT = 8 m

VENVOL = VENLEN × TRNWID × TRNHT

Total Volume

$HCF(4) = \Sigma\ vol_i$

Foundation Area (footprint)

$$HCF(S) = HCLEN \times HCWID + GALEN \times GAWID \ .$$

OUTPUT FROM REACEL

The printed output, RBTYP, of the module includes the input and supplemental parameters used in the size calculations, the building shape, and the basic building dimensions. In addition to printed output, reactor building information is provided for use by other modules. Table 37 is a sample of output for the reactor building.

REFERENCES

1. C. A. Flanagan, D. Steiner, and G. E. Smith, *Fusion Engineering Device Design Description*, ORNL/TM-7948/V2, vols. 1 and 2, Oak Ridge Natl. Lab., December 1981.
2. P. H. Sager et al., *FED Baseline Engineering Studies Report*, ORNL/FEDC-82/2, Oak Ridge Natl. Lab., April 1983.

Table 37. Sample output

```
1                          REACTOR BUILDING

input :

          neutron flux to envir. (neut/m2-sec)          = 1.900e+06
          e-fold of building wall (m)                   =     0.145
          neutron flux thru tf outer dewar(neut/m2-sec) = 2.123e+12
          tf outer radius (m)                           =    11.012
          tf coil max height (m)                        =    12.570
          outboard shield radius (m)                    =     7.929
          right of way (m)                              =     5.000
          transportaion clearance (m)                   =     1.000
          device extention (m)                          =     0.000
          vacuum pump hatch clearance (m)               =     5.800
          crane clearance (m)                           =     5.100
          structural clearance - roof (m)               =     0.000
          cryostat clearance - bottom (m)               =     3.000
          cryostat clearance - top (m)                  =     3.600
          shield sector width (m)                       =     4.900
          shield sector length (m)                      =     5.075
          shield sector height (m)                      =     7.751
          shield sector weight (kg)                     =     0.000
          foundation thickness (m)                      =     2.000
          bucking cyclinder height (m)                  =    10.200
          pf coil radius (m)                            =     9.897

output :

          RECTANGULAR REACTOR BUILDING

          neutron flux to building wall (neut/m2-sec)   = 2.354e+11
          reactor building wall thickness (m)           =     1.700
          reactor building length (m)                   =    61.652
          reactor building width (m)                    =    51.025
          reactor building height (m)                   =    39.171
          reactor building volume (m3)                  =123222.041
```

11. TORUS VACUUM MODULE

The vacuum module determines the minimum vacuum system needed to handle a gas load: (1) during the burn, (2) between burns, and (3) for initial pumpdown. The gas load and an associated total pumping speed is computed for the above options. The largest load is then used to size the vacuum system. The size of the vacuum ducts is usually what limits vacuum system performance. Therefore, a reiterative routine[1] is used to determine (1) the required number of ducts if the individual pump speed and duct dimensions are unchanged, (2) the required duct diameter if the individual pump speed and duct number are fixed, and (3) the required pump speed if the duct dimensions and number are fixed at a nonextreme limit. Once the vacuum system is sized, the major components (high vacuum pumps needed, backup pumps, and large-diameter metal valves) are costed assuming either cryosorption pumps or turbomolecular pumps. The shielding around the vacuum is also costed.

MAJOR ASSUMPTIONS AND CONSTRAINTS

VACUUM CODE

- The code assumes D-T fuel with 50/50 mix of deuterium and tritium in plasma.
- The calculations to size components are based on moles of gas.
- The conductance of the limiter is ignored as a first approximation.
- The limiting conductance is that of the vacuum ducts. Correct sizing of the large vacuum pumps is needed for this to be true. This is a desirable assumption since if it is not true, the duct diameter has to be increased.
- The pumping speed needed is achieved by increasing the number of ducts until the default is reached.
- A duct length default = 2 × (major radius of the torus) is assumed. This can be modified by changing a line of code.
- If the vacuum pumps are sized correctly and the default cannot handle the gas load, the input duct diameter should be increased by 0.1 to 0.3 m.

- The compound cryosorption pumps presently costed are assumed to not be regenerative while pumping. Therefore two pumps and four valves are required on each duct, raising costs. If a pump design is achieved that regenerates while operating, the number of pumps and valves needed for this option decreases by two with a corresponding decrease in cost.
- The turbomolecular pumps available have maximum speeds of 5 m^3/s. If larger pumps are designed and built, the number of pumps needed would decrease. The algorithm for their cost should then be changed.

MODULE INPUT PARAMETERS

Two input parameters select the computing options to be used. Limiter option (lim) = 1, 0 corresponds respectively to pumping during the burn and pumping between burns or initial pumpdown. If lim = 0, there is no limiter considered and the vacuum system is sized for torus pumpdown between burns. If lim = 1, there is a limiter and the code sizes a vacuum system for conditions either during burn or between burns, whichever requirement is the greater.

Other key parameters input by the user are the number of bends in the vacuum duct, the duct diameter, the duct length, the number of vacuum ducts desired and/or acceptable, the pressure at the first wall during the burn, the outgassing rate, the preburn vacuum vessel gas pressure, the vacuum pump capacity and speed, the fraction of plasma recycled, the regeneration time for cryosorption pumps, the postburn gas temperature, the unit cost of vacuum duct shielding, and the volume fraction of vacuum duct shielding that is not stainless steel. Other parameters are input from the FWSDAT, TRTDAT, and PHYDAT modules. A complete listing is given in Table 38.

EQUATIONS USED (VACUUM CODE)

R = Gas Constant (8.3143 Pa m^3)

P_i = Initial Pressure (Pa)

Table 38. Parameters for torus vacuum equations

Symbol	Description	Units	Source[a]
bnum	Number of bends in each duct		U
diam	Diameter of vacuum duct	m	U
dlen	Duct length [default is 2 × rϕ (major radius) within code — must be removed if not applicable.]	m	U
dnum	Number of vacuum ducts — initial guess (Suggestion is to use number of sectors)		U
dpp	Pressure desired at first wall during the burn	Pa	U
dsho	Outboard shield thickness	m	FWSDAT
duclim	Maximum number of ducts		U
fb	Fractional burn including recycle		TRTDAT
gsout	Outgassing rate (5.3×10^{-4})	Pa m^3/s	U
ipump	Option for type of vacuum pump ("turbo" or "cryo")		U
lim	Limiter option ("1" - limiter used during burn; "0" - ducts used between burns)		U
ni	Ion density	No./m^3	PHYDAT
pburn	Preburn vacuum vessel gas pressure	Pa	U
pcap	Vacuum pump capacity (2000 to 20,000)	Pa m^3/s	U
psp	Rated speed per pump (5 for "turbo") (25 - 100 for "cryo")	m^3/s	U
reflt	Fraction of escaping plasma recycle		U
regen	Pump regeneration time (0 for "turbo") (< 1 to 2 for "cryo")	h	U
tburn	Burn time	s	PHYDAT
tdiff	Tritium removed by vacuum during each burn cycle	g	TRTDAT
tg	Postburn gas temperature	K	U
tqnch	Plasma quench time	s	PHYDAT
tramp	OH ramp (charge) time	s	PHYDAT
ucduct	Unit cost of shield on vacuum duct	$/kg	U
vfduct	Volume fraction of vacuum duct shielding that is not stainless steel		U
vol	Plasma volume	m^3	PHYDAT
vtors	Volume of torus	m^3	FWSDAT

[a]Source: U = input is supplied by user

P_x = Pressure at Given Conditions (Pa)
V = Volume (m^3)
T = Temperature (k)
n = Number of moles of gas
t = Time (s)

- <u>During a Burn</u>
  - Gas Load Per Second (GL)

$$GL = \frac{nRT}{t} = \frac{RT\ (\text{Tritium Pumped})}{\text{Burn Time}\ (3.0)} \qquad \left(\frac{Pa\ m^3}{s}\right)$$

  - Total Pumping Speed Required Per Second (ST)

$$S_t = \frac{GL}{P_x \text{ at First Wall}} \qquad (m^3/s)$$

  - Total Speed for Deuterium/Tritium Per Second (S_{DT})

$$S_{DT} = S\ (1 - \text{Fractional Burn}) \qquad (m^3/s)$$

  - Total Speed for Helium Per Second (S_{He})

$$S_{HE} = S\ (\text{Fractional Burn}) \qquad (m^3/s)$$

- <u>Between Burns</u>
  - Postburn Gas Pressure in the Vessel (P_x)

$$P_x = \frac{RT\ (\text{Ion Density})\ (\text{Plasma Vol.})\ (1 + \text{Fractional Burn})}{2.0\ (6.023 \times 10^{23})\ (\text{Torus Vol.})} \qquad (Pa)$$

  - Postburn Helium Pressure in the Vessel (P_{He})

$$P_{He} = \text{Fractional Burn}\ (P_x) \qquad (Pa)$$

  - Speed Needed to Handle Outgassing

$$S_1 = \text{Outgassing Rate}/P_i \qquad (m^3/s)$$

— Speed Needed to Handle the Gas Load from the Burn (S_2)

$$S_2 = \frac{(\text{Torus Vol.})\ \ln\ (P_x/P_i)}{t} \qquad (m^3/s)$$

t = time allowed for pumping

1. It is assumed to be the sum of the times to quench the plasma and to ramp up for another cycle.
2. The maximum time would be that for initial pumpdown. The code would have to be modified to handle this.

— Total Speed (S_T)

$$S_T = S_1 + S_2 \qquad (m^3/s)$$

— Total Helium Speed (S_{He})

$$S_{He} = (\text{Torus Vol.})\ \{\ln\ [P_{He}/P_i\ (0.25)]\}/t \qquad (m^3/s)$$

- <u>Vacuum Duct Sizing</u>

— Speed Needed for Each Duct and Pump to Handle Gas load (S_e)

$$S_E = S_T/\text{Number of Ducts} \qquad (m^3/s)$$

— Helium Speed Needed for Each Duct and Pump (S_{EHe})

$$S_{EHe} = S_{EHe}/\text{Number of Ducts} \qquad (m^3/s)$$

— Conductance of Each Duct (C) for D/T

Y = Duct Conductance Constant (0.86)

EL = Effective length

EL = Length + 1.33 (Number of Duct Bends) (Duct Diameter)

Mass = 5 - Fractional Burn

C_A = Aperture Effects

$$C_A = 0.059\ (\text{Duct Diameter})^2\ (0.31)\ [T = 373/\text{mass}]^{1/2} \qquad (m^3)$$

C_L = Main Conductance

$$CL = \frac{0.079\ (\text{Duct Diameter})^3\ (Y)\ (0.31)}{EL} \left(\frac{T}{\text{Mass}}\right)^{1/2} \qquad (m^3)$$

$$\frac{1}{C} = \frac{1}{C_L} + \frac{1}{C_A} \qquad (1/m^3)$$

— Conductance of Each Duct (C_{He}) for Helium

$$C_{He} = C\ (\text{Mass}/4.0)^{1/2} \qquad (m^3)$$

— Speed of Duct and Pump Assumed as Reference (S_A)

VP_A = Vacuum Pump Speed Assumed

$$\frac{1}{S_A} = \frac{1}{VP_A} + \frac{1}{C} \qquad (1/m^3)$$

— Vacuum Pump Speed Needed for Reference Number of Ducts to Handle Gas Load (V_{PN})

$$\frac{1}{VP_N} = \frac{1}{S_E} - \frac{1}{C} \qquad (1/m^3)$$

— Duct Conductance Needed for Given Vacuum Pump Speed to Handle Gas Load (C_R)

$$\frac{1}{C_R} = \frac{1}{S_E} - \frac{1}{VP_A} \qquad (1/m^3)$$

C_R is determined by an iterative routine.

— Vacuum Pump Helium Speed Needed for Given Number of Reference Ducts to Handle the Gas Load (S_{VPH})

$$\frac{1}{S_{VPH}} = \frac{1}{S_{EHe}} - \frac{1}{C_{He}} \qquad (1/m^3)$$

- Cost of the Major Vacuum System Components (1983 dollars)
  - Turbomolecular option

    C_V = Vacuum Pump Cost

    $C_V = (VP_N/5.)$ (Number of Ducts) ($100,000) ($)

    C_R = Backing Pump cost

    $C_R = [VP_N/5.(2)]$ (Number of Ducts) ($200,000) ($)

    C_V = Large Metal Valve Cost

    $C_V = (\text{Duct Diameter})^{1.8}$ (Number of Ducts) (2) ($180,000) ($)

    T_C = Total Cost

    $T_c = C_V + C_R + C_v$

  - Compound Cryopump Option

    $C_v = (VP_N/25.)$ (Number of Ducts) (2) ($100,000) ($)

    $C_R = [VP_N/25.(2)]$ (Number of Ducts) (2) ($200,000) ($)

    $C_v = (\text{Duct Diameter})^{1.8}$ (Number of Ducts) (4) ($180,000) ($)

- Cost of Vacuum Duct Shield (C_s)

  V_s = Volume of Shield (m^3)

  V_F = Void Fraction

  W = Weight of Stainless Steel in Shield (kg)

  $W = (V_s)\ (7800\ kg/m^3)\ (1 - V_F)$ (kg)

  C_u = Unit Cost of Shield ($M/kg)

  $C_s = (W)$ (Number of Ducts) $(10^{-6})\ (C_u)$ $M

SAMPLE MODULE OUTPUT (VACUUM CODE)

The vacuum system output for two examples (Tables 39 and 40) is given. The two tables compare cryopumps and turbomolecular pumps for the same system requirements. The only difference is cost.

The area brackted on Table 39 has the following usefulness. First, a given speed for the vacuum pump on each duct is given as 20 m^3/s. Using this, the needed speed of each of the ten ducts specified at 1.2-m diameter, two bends and 10.01-m long (boxed items) plus their pumps is 12.9 m^3/s. The actual speed is only 12.2 m^3/s. Therefore, the system will not be able to remove the total gas load (12.9 Pa m^3/s) maintaining

Table 39. Torus evacuation system parameters (cryopumps)

gas load-divertor (pa-m**3/s)	=	1.29e+01
divertor pump pressure (pa)	=	0.10e+00
divertor pump speed (m**3/s)	=	0.13e+03
divertor pump speed-dt (m**3/s)	=	0.12e+03
divertor pump speed-he (m**3/s)	=	0.11e+02
post burn gas load (pa-m**3)	=	0.14e+03
total pumping speed needed (m**3/s)	=	129.088
total He pumping speed needed (m**3/s)	=	10.541
evacuation volume (m**3)	=	375.7
post burn gas temperature (k)	=	573.00
post burn gas pressure (pa)	=	3.67e-01
preburn pressure (pa)	=	1.33e-03
post burn he pressure (pa)	=	0.30e-01
preburn he pressure (pa)	=	0.33e-03
pump capacity (pa-m**3)	=	5.00e+03
pump loading factor	=	0.83
duct conductance constant	=	0.86
outgas rate (pa-m**3/s)	=	0.
outgas speed (m**3/s)	=	0.0
number of ducts	=	10.00
needed speed of duct and pump (m**3/s)	=	1.29e+01
duct diameter (m)	=	1.20
number of duct bends	=	2.
duct length (m)	=	10.01
duct conductance (m**3/s)	=	31.11
rated speed/pump (m**3/s)	=	20.0
achieved speed of duct and pump (m**3/s)	=	12.174
minimum pump speed per duct (m**3/s)	=	22.062
minimum duct diameter (m)	=	1.28
tot He pumping speed needed (m**3/s)	=	1.05e+01
minimum He pump speed per duct (m**3/s)	=	1.09e+00
minimum surface area per pump (m**2)	=	2.1747
fixed reseneration time (hours)	=	1.00
read. pump capacity (pa-m**3)	=	3.26e+02
reseneration period (hours)	=	127.24
cost - main vacuum pumps ($)	=	1.76e+06
cost - backing pumps ($)	=	1.76e+06
cost - hard seal metal valves ($)	=	1.00e+07
total vacuum system cost ($)	=	1.35e+07

Table 39 (continued)

```
output :
 governing mode of operation is pumping the limiter during burn
 pump type                                  =  cryo
 gas load-divertor (pa-m**3/s)              =    12.909
 divetor pump pressure (pa)                 =     0.100
 post burn gas load (pa-m**3)               =     0.000
 total pumping speed needed (m**3/s)        =   129.088
 number of ducts needed                     =    10.000
 conductance of each duct (m**3/s)          =    31.114
 rated speed/ pump (m**3/s)                 =    20.000
 needed speed of duct and pump (m**3/s)     =    12.909
 achieved speed of duct and pump (m**3/s)   =    12.174
 minimum pump speed per duct (m**3/s)       =    22.062
 minimum diameter with psp speed (m)        =     1.275
 cost of vacuum system ($)                  =   1.35e+07
 total He pumping speed needed (m**3/s)     =    10.541
 minimum He pump speed per duct (m**3/s)    =     1.087
 minimum surface area per pump (m**2)       =     2.175
shielded vacuum duct output:
 duct length (m)                            =     10.01
 shield thickness (m)                       =      0.40
 shielded duct cost (m$)                    =     24.49

all done
```

Table 40. Torus evacuation system parameters (turbopumps)

gas load-divertor (pa-m**3/s)	=	1.29e+01
divertor pump pressure (pa)	=	0.10e+00
divertor pump speed (m**3/s)	=	0.13e+03
divertor pump speed-dt (m**3/s)	=	0.12e+03
divertor pump speed-he (m**3/s)	=	0.11e+02
post burn gas load (pa-m**3)	=	0.14e+03
total pumping speed needed (m**3/s)	=	129.088
total He pumping speed needed (m**3/s)	=	10.541
evacuation volume (m**3)	=	375.7
post burn gas temperature (k)	=	573.00
post burn gas pressure (pa)	=	3.67e-01
preburn pressure (pa)	=	1.33e-03
post burn he pressure (pa)	=	0.30e-01
preburn he pressure (pa)	=	0.33e-03
pump capacity (pa-m**3)	=	5.00e+03
pump loading factor	=	0.83
duct conductance constant	=	0.86
outgas rate (pa-m**3/s)	=	0.
outgas speed (m**3/s)	=	0.0
number of ducts	=	10.00
needed speed of duct and pump (m**3/s)	=	1.29e+01
duct diameter (m)	=	1.20
number of duct bends	=	2.
duct length (m)	=	10.01
duct conductance (m**3/s)	=	31.11
rated speed/pump (m**3/s)	=	20.0
achieved speed of duct and pump (m**3/s)	=	12.174
minimum pump speed per duct (m**3/s)	=	22.062
minimum duct diameter (m)	=	1.28
tot He pumping speed needed (m**3/s)	=	1.05e+01
minimum He pump speed per duct (m**3/s)	=	1.09e+00
minimum surface area per pump (m**2)	=	2.1747
fixed regeneration time (hours)	=	1.00
read. pump capacity (pa-m**3)	=	0.
regeneration period (hours)	=	0.00
cost - main vacuum pumps ($)	=	4.41e+06
cost - backing pumps ($)	=	4.41e+06
cost - hard seal metal valves ($)	=	5.00e+06
total vacuum system cost ($)	=	1.38e+07

Table 40 (continued)

```
output :
 governing mode of operation is pumping the limiter during burn
 pump type                                    =  turbo
 gas load-divertor (pa-m**3/s)                =    12.909
 divetor pump pressure (pa)                   =     0.100
 post burn gas load (pa-m**3)                 =     0.000
 total pumping speed needed (m**3/s)          =   129.088
 number of ducts needed                       =    10.000
 conductance of each duct (m**3/s)            =    31.114
 rated speed/ pump (m**3/s)                   =    20.000
 needed speed of duct and pump (m**3/s)       =    12.909
 achieved speed of duct and pump (m**3/s)     =    12.174
 minimum pump speed per duct (m**3/s)         =    22.062
 minimum diameter with psp speed (m)          =     1.275
 cost of vacuum system ($)                    =    1.38e+07
 total He pumping speed needed (m**3/s)       =    10.541
 minimum He pump speed per duct (m**3/s)      =     1.087
 minimum surface area per pump (m**2)         =     2.175


shielded vacuum duct output:
 duct length (m)                              =     10.01
 shield thickness (m)                         =      0.40
 shielded duct cost (m$)                      =     24.49

all done
```

a pressure of 0.1 Pa. (These items are denoted by arrows.) If one does not increase the number of ducts, there are two options available to remove the gas load.

The first is to increase the vacuum pump speed. The minimum speed of each vacuum pump needed with the given ducts (boxed items) is >22 m^3/s. The other option is to increase the vacuum duct size by increasing the diameter. The minimum diameter needed is 1.275 m ≅ 1.3 m. These two options are noted in the bracketed sections.

Some words of caution are advised. One, no redundancy is present in this system which gives the minimum system needed for pumping. Two, the shielding for the ducts does not include the shielding needed for the pumps, nor does it include the magnetic shielding needed on the turbomolecular pumps.

The cost is calculated based on the specified number of ducts at the increased pump speed (holding the diameter constant).

Figures 78 and 79 show the vacuum code flow diagram.

ORNL–DWG 84-3890 FED

FLOW DIAGRAM
(VACUUM CODE)

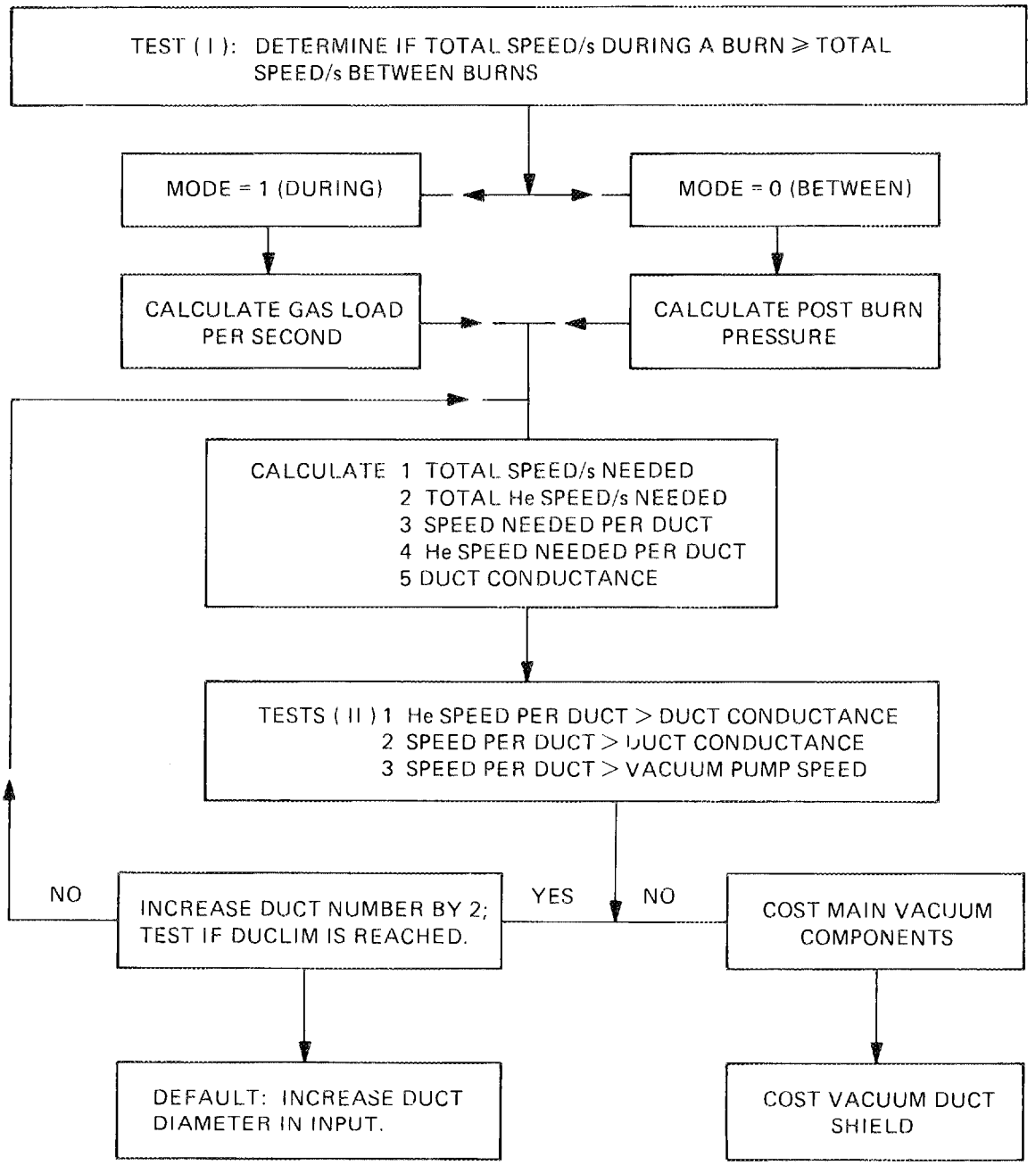

Fig. 78. Flow diagram (vacuum code).

ORNL–DWG 84-3892 FED

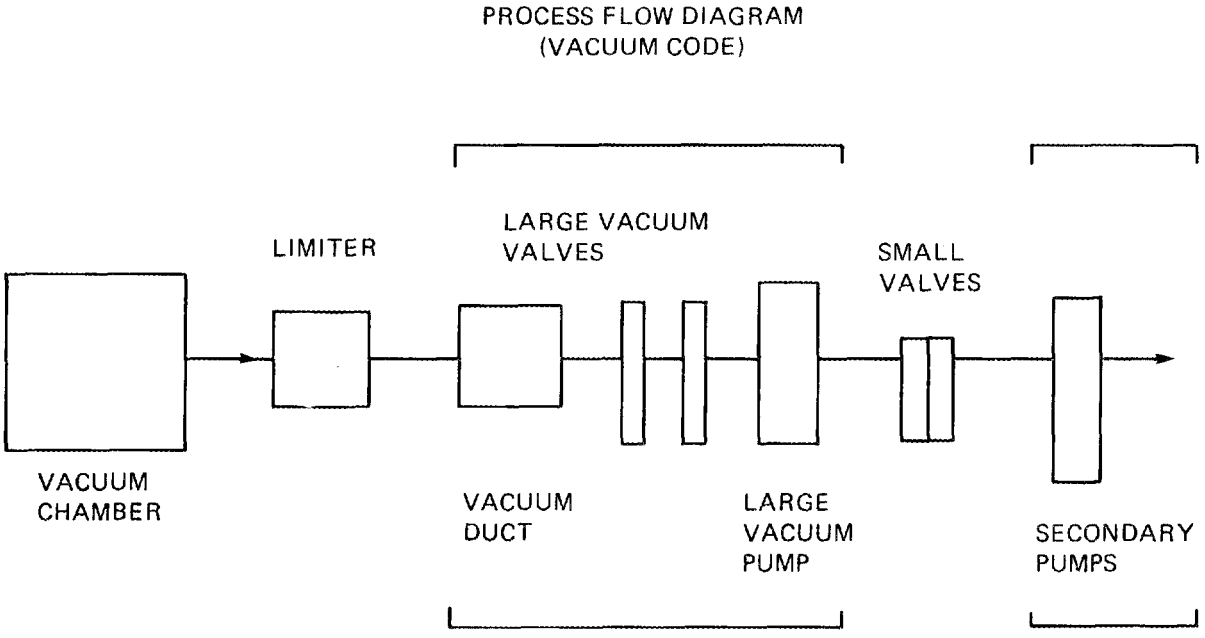

Fig. 79. Process flow diagram (vacuum code).

REFERENCES

1. R. G. Clemmer, *TCODE — A Computer Code for Analysis of Tritium and Vacuum Systems for Tokamak Fusion Reactors*, ANL/FPP/TM-110, Argonne Natl. Lab., Argonne, Ill., 1978.

12. TRITIUM PROCESSING MODULE

The tritium model determines mass flow rates for the primary D-T fuel cycle.[1] In a neutral beam section an option of using these beams before the burn or before and during the burn is included. Tritium inventories in all major systems are calculated. The cost of the tritium needed per year is calculated. An atmospheric tritium recovery system is assumed in four areas (reactor hall, hot cell, tritium building, and rad-waste building). Capital costs for the major tritium systems are calculated in 1983 dollars, using information supplied by LANL, Mound, and TFTR.

MAJOR ASSUMPTIONS AND CONSTRAINTS (TRITIUM CODE)

- Tritium neutral beams are not used. (If they are, a total neutral beam gas efficiency, NBTEFF, is needed.)
- Impurities are a fraction of the tritium flow.
- The plasma is recycled at the edge.
- The maximum credible tritium release is 10 g.
- Costs for tritium systems can be based on costs of units at the Tritium System Test Assembly (TSTA), LANL, Mound, and TFTR.
- The cost of tritium is $1/curie.
- The tritium in storage is set equal to 30 days of burn. For many designs, this is not appropriate, so care is advised. A default value for a low-availability reactor is $\leq$100 g.
- The reactor cycle consists of the burn time plus the quench (plasma quench plus minimum startup duration). The quench is usually <100 s. The reactor day consists of an uninterrupted sequence of these cycles.
- The tritium in the plant can be approximated by that found in the major processing units.
- Tritium needs per year are approximated by the above total plus decay expected. (This does not account for any tritium in structural components or lost to the environment.)
- A decontamination factor of 10^{-6} is assumed for the atmospheric tritium-recovery units. It is $\sim 10^{-2}$ for most systems now operating.

MODULE INPUT PARAMETERS (TRITIUM CODE)

Key parameters (Table 41) input by the user are the cost of tritium, the removal efficiency of the atmospheric tritium recovery units, and the desired cleanup time for each building that has an atmospheric tritium-recovery unit.

Equations Used (Tritium Code)

- Tritium Mass Flow Rates with No Neutral Beams

A = Availability

R = Tritium Fraction Recycled

τ = Confinement Time

Quench = Time Between Burns

— Tritium to Fill Chamber Each Cycle (T_S)

$$T_S = \left(\frac{\text{Ion Density}}{2}\right) (\text{Plasma Vol.}) \ (5.0 \times 10^{-24}) \qquad \text{(g/cycle)}$$

— Tritium Removed at the Plasma Edge During Each Cycle (T_D)

$$T_D = (\text{Burn Time}) \left(\frac{\text{Ion Density}}{2}\right) (\text{Plasma Vol.}) \left(\frac{5.0 \times 10^{-24} \ (1-R)}{\tau}\right) \qquad \text{(g/cycle)}$$

— Tritium Burned Each Cycle (T_B)

$$T_B = \frac{(\text{Burntime}) \ (\text{Fusion Power})}{(\text{Energy Per Fusion})} \ (4.99 \times 10^{-6}) \qquad \text{(g/cycle)}$$

— Total Tritium Input (T_T)

$$T_T = T_S + T_D + T_B \qquad \text{(g/cycle)}$$

— Fractional Burn (F_B)

$$F_B = T_B/T_T$$

— Tritium Exhausted Per Cycle (T_{EX})

$$T_{EX} = T_T - T_B \qquad \text{(g/cycle)}$$

— Burn Cycles in 24-Hour Day (C_y)

$$C_y = 24 \ (3600)/(\text{Burn Time} + \text{Quench})$$

— Tritium Burned Each Day (T_B/D)

$$T_{B/D} = C_y \ (T_B) \qquad \text{(g/d)}$$

Table 41. Module input parameters (tritium code)

Symbol	Description	Units	Source[a]
avail	Machine availability (annual)		FWSDAT
bblm	Tritium breeding blanket mass	kg	U
br	Breeding ratio for breeding blanket		U
ctrit	Cost of tritium	$/Ci	U
cueff	Removal efficiency for atmospheric tritium recovery unit		U
cuthc	Desired cleanup time/hot cell	hr	U
cutrb	Desired cleanup time/reactor building	hr	U
cutrw	Desired cleanup time/rad-waste building	hr	U
cuttb	Desired cleanup time/tritium building	hr	U
dnum	Number of vacuum ducts (initial guess)		VACDAT
ductx	Duct width/neutral beams	cm	NBDAT
ducty	Duct height/neutral beams	cm	NBDAT
eb	Neutral beam energy	keV	PHYDAT
fwsur	First-wall surface area (outer wall)	m^2	FWSDAT
hcf(4)	Inner volume of hot cell	m^3	U
nbgeff	Gas efficiency of deuterium neutral beams (Source eff. times neutralizer eff.)		NBDAT
ni	Ion density	number/m^3	PHYDAT
nnb	Number of deuterium neutral beams		PHYDAT
npf	Number of pellet injectors		FUEDAT
ntnb	Number of tritium neutral beams (default = 0)		U
paux	Auxiliary heating required	MW	PHYDAT
pb	Neutral beam power	MW	PHYDAT
powfmw	Fusion power	MW	PHYDAT
radwa(4)	Inner volume of rad-waste building	m^3	U
reb(4)	Inner volume of reactor building	m^3	U
reflt	Fraction of escaping plasma recycled		VACDAT
regen	Pump regeneration time	hr	VACDAT
stkcon	Tritium concentration in stack effluent	$\mu Ci/m^3$	U
taup	Particle confinement time	s	PHYDAT

Table 41 (continued)

Symbol	Description	Units	Source[a]
tbcon	Tritium concentration in breeder blanket	ppm	U
tbeam	Startup heating duration	s	PHYDAT
tburn	Burn time	s	PHYDAT
tfrac	Fraction of tritium in plasma D-T mixture		U
tohs	OH solenoid swing time	s	PHYDAT
tqnch	Plasma quench time	s	PHYDAT
tramp	OH ramp (charge) time	s	PHYDAT
tritbl(4)	Inner volume of tritium building	m^3	U
vol	Plasma volume	m^3	PHYDAT
wclean	Water cleanup	L/d	U

[a]Source: U = input is supplied by user; C = input flows in from other modules.

— Tritium Burned Each Year (T_Y)

$T_Y = (T_{B/D})\ (365)\ (A)$ (g/y)

— Tritium Exhausted Per Day ($T_{EX/D}$)

$T_{EX/D} = C_y\ (T_{EX})$ (g/d)

— Tritium Fueled Per Cycle (T_F)

$T_F = T_T - T_s$ (g/cycle)

— Tritium Fueled Per Day ($T_{F/D}$)

$T_{F/D} = C_y\ (T_F)$ (g/d)

— Tritium Fueled Per Year ($T_{F/Y}$)

$T_{F/Y} = T_{F/D}\ (365)\ (A)$ (g/y)

— Tritium to Fill Chamber Each Day ($T_{S/D}$)

$T_{S/D} = C_y\ (T_S)$ (g/d)

— Tritium to Fill Chamber Each Hour ($T_{S/H}$)

$T_{S/H} = T_{S/D}/24.$ (g/h)

(Do similar computations for exhaust/h, fuel/h, burn/h.)

— Tritium Input Per Hour ($T_{T/H}$)

$T_{T/H} = T_{EX/H} + T_{B/H}$ (g/h)

— Tritium Input for Day ($T_{T/D}$)

$T_{T/D} = T_{EX/D} + T_{B/D}$ (g/d)

- Impurity Mass Flow Rates

The assumption is made that the impurity mass flow rates are a function of the helium mass flow rates.

— Helium Exhausted Per Day (He)

$He = T_{B/D}\ (4/3)$ (g/d)

— Protium Exhausted Per Day (H)

$H = (He)\ (0.031)$ (g/d)

— Carbon Exhausted Per Day (C)

$C = (He)\ (0.186)$ (g/d)

— Oxygen Exhausted Per Day (O)

$O = (He)\ (0.015)$ (g/d)

— Nitrogen Exhausted Per Day (N)

$N = (He)\ (0.013)$ (g/d)

— Argon Exhausted Per Day (Ar)

$Ar = (He)\ (0.124)$ (g/d)

- Neutral Beam/Deuterium Mass Flow Rates

— Deuterium Burned Per Day ($D_{B/D}$)

$D_{B/D} = (2/3)\ T_{B/D}$ (g/d)

— Deuterium Burned Per Cycle (D_B)

$D_B = (2/3)\ (T_B)$ (g/cycle)

— Deuterium Burned Per Year ($D_{B/y}$)

$D_{B/y} = D_{B/D}\ (365)\ (A)$ (g/y)

— FRAC = Fraction of Tritium Versus Deuterium in Plasma

— Deuterium Input Per Day ($D_{I/D}$)

$$D_{I/D} = (2/3)\ (T_{I/D}) \left(\frac{1 - FRAC}{FRAC}\right) \quad \text{(g/d)}$$

Option 1: Are Deuterium Neutral Beams Being Used? (Yes/No)

Option 2: Is Auxiliary Power (AUX) Needed During the Burn? (Yes/No)

— Deuterium Injected Into the Plasma Per Day ($D_{J/D}$)

$$D_{J/D} = \frac{(1793)\ (\text{Beam Power})(\text{Beam Time}) + (\text{Burn Time})\ (\text{Aux})}{(\text{Beam Energy})\ (\text{Burn Time} + \text{Quench})} \quad \text{(g/d)}$$

— Deuterium Fueled to the Beams Per Day ($D_{F/D}$)

$$D_{F/D} = \frac{D_{J/D}\ (1 - \text{Beam Efficiency})}{\text{Beam Efficiency}} \quad \text{(g/d)}$$

Option 3: T_t = Time Neutral Beam Used

$T_t = (\text{Burn time}) + (\text{Beam Time})$ (s)

T_t = Burn time if Aux = 0 (s)

— Tritium Flux From the Plasma to the Neutral Beams (T_{DB})

$$T_{DB} = \frac{(\text{Ion Density})\ (\text{Plasma Vol.})\ (T_t)\ (5.0 \times 10^{-24})}{2\ (\text{Surface Area First Wall})\ (\tau)} \quad \text{(g/cycle)}$$

— Tritium Pumped by the Deuterium Neutral Beams Per Day ($T_{P/DB}$)

SA = Surface Area of Each Neutral Beam Aperture

$T_{P/DB} = (T_{DB})\ (SA)\ (\text{Number of Deuterium Neutral Beams})\ (Cy)$

(g/d)

— Deuterium Fueled Per Day ($D_{F/D}$)

$$D_{F/D} = \left[(2/3)\ (T_{FD}) - \frac{(D_{ID}\ T_{FD})}{(T_{FD} + T_{S/D})}\right]\left(\frac{1 - FRAC}{FRAC}\right) \qquad (g/d)$$

— Deuterium Needed Per Day

$$D_{ND} = D_{I/D} + D_{F/D} \qquad (g/d)$$

— Deuterium Needed Per Cycle

$$D_N = D_{N/D}/Cy \qquad (g/cycle)$$

- <u>Tritium Inventories</u>

— Tritium in All Cryopumps (T_{VP})

RG = Regeneration Time (hr)

$$T_{VP} = (T_{EX/D})\ R/24 \qquad (g)$$

— Tritium in Storage (T_{ST})

This is an assumption of 30-day storage. It may not be appropriate for all designs.

$$T_{ST} = 30\ (T_{B/D}) \qquad (g)$$

— Tritium in Surge Tank (T_{SR})

$$T_{SR} = \frac{T_{VP}\ (1.2)}{(1 + \text{Number of Ducts})} \qquad (g)$$

— Tritium in Fuel Cleanup Unit (T_{FC})

$$T_{FC} = 40 + 0.01\ (T_{EX/D}) \qquad (g)$$

— Tritium in Isotope Separation System (T_{IS})

$$T_{IS} = 50 + 0.1\ (T_{EX/D}) \qquad (g)$$

— Tritium in Breeder Blanket (T_{BL})

$$T_{BL} = 0.001\ (\text{Breeder Mass})\ (\text{Unit Tritium Concentration}) \qquad (g)$$

— Tritium in Blanket Tritium-Recovery Unit (T_{BR})

$$T_{BR} = (\text{Breeding Ratio})\ (T_{B/D})\ (0.05) \qquad (g)$$

— Tritium in Pellet Fuelers (T_{PF})

$$T_{PF} = (\text{Number of Fuelers})\ (10 + T_F) \qquad (g)$$

— Tritium in All-Deuterium Neutral Beams (T_{DNB})

$$T_{DNB} = (T_{P/DB})\ RG/24 \qquad (g)$$

— Tritium in Tritium Neutral Beams (T_{TNB})

$$T_{TNB} = (D_{F/D})\ RG/24 \qquad (g)$$

— Total Tritium in Major Processing Units (TT)

$$TT = T_{VP} + T_{ST} + T_{SR} + T_{FC} + T_{IS} + T_{BL} + T_{BR} + T_{PF} + T_{DNB} + T_{TNB} \qquad (g)$$

- Tritium Needs and Costs

— Tritium Decay Per Year (T_{DC})

$T_{DC} = 0.056\ TT$ (g/y)

— Tritium Needed Per Year (T_{NY})

$T_{NY} = (365.24)\ T_{BD}\ (1 - \text{Breeding Ratio})\ (A) + T_{DC}$ (g/y)

— Cost of Needed Tritium Per Year (C_{TN})

$C_{TN} = T_{NY}\ (9600)\ (\text{Unit Cost - Tritium})$ ($/y)

— Tritium Bred Per Year (T_{BRY})

$T_{BRY} = (365.24)\ (\text{Breeding Ratio} - 1)\ (A)\ T_{B/D}$ (g/y)

— Doubling Inventory (T2T)

$T2T = 2.0\ (TT)$ (g)

— Doubling Time (TDT)

$$TDT = \left(\frac{-1}{0.056}\right) \ln \left(\frac{T_{BRY} - 0.056\ T2T}{T_{BRY}}\right) \quad (y)$$

— Tritium Bred Per Day (T_{BRD})

$T_{BRD} = (T_{B/D})\ (\text{Breeding Ratio})$ (g/d)

- Atmospheric Tritium-Recovery Systems (Detritiation)

The following equations are used for each area in which tritium will be handled: reactor hall, hot cell, tritium facility, and rad-waste building. Each area is considered separately.

— Tritium Concentration After Release of 10 g (T_C)

$$T_C = \frac{9.6 \times 10^9\ (10)}{\text{Vol. of Area}} \quad (Ci/m^3)$$

K = Tritium Concentration Released From Stack ($\mu Ci/m^3$)

CE = Cleanup Efficiency

Cu = Desired Cleanup Time (hr)

DC = Decontamination Factor

— Processing Rate of Atmosphere (V_p)

$$V_P = \frac{100}{(CE)\ (Cu)\ 60.} \ln \left(\frac{T_C}{K}\right) \quad (\text{vol } \%/\text{min})$$

— Processing Rate of Atmosphere (V_{pp})

$V_{pp} = V_p\ (\text{Bldg. Vol.})\ (0.01)/60$ (m^3/s)

— Rate at Which the Building Atmosphere is Vented (R_{VB})

$$R_{VB} = \frac{\text{Fraction Bldg. Vol. Per Day}}{24\ (3600)} \qquad (m^3/s)$$

— Tritium Vented From the Stack (T_{VS})

$$T_{VS} = 10 \left(1 - \frac{K}{T_C}\right) DC \left(\frac{R_{VB}}{V_{PP}}\right) 9600 \qquad (Ci)$$

— Tritium Released After Cleanup to 50 $\mu Ci/m^3$ (T_{RR})

$$T_{RR} = 10^{-6}\ (\text{Bldg. Vol.})\ (K) \qquad (Ci)$$

- Costs of Major Tritium Systems

— Cost of Receiving Glove Box (C_{RS})

$$C_{RS} = 0.2 \times 10^6 \qquad (\$)$$

— Cost of Shipping Containers (C_{SH})

$$C_{SH} = 0.012 \times 10^6\ (10) \qquad (\$)$$

— Cost of Tritium Storage (C_{TS})

$$C_{TS} = 0.25 \times 10^6\ (T_{ST}/100) \qquad (\$)$$

— Cost of Contaminated (Tritium) Deuterium Storage (C_{DS})

$$C_{DS} = 0.25 \times 10^6\ (T_{ST}/100)\ (2/3) \qquad (\$)$$

— Cost of Fuel Cleanup Unit (C_{FC})

$$C_{FC} = 1 \times 10^6\ (1.67)\ (T_{T/D}/1160)^{0.2} + 0.2 \times 10^6 \qquad (\$)$$

— Cost of Isotope-Separation System (C_{IS})

$$C_{IS} = 2.9 \times 10^6\ (1.67)\ (T_{T/D}/1160)^{0.4} \qquad (\$)$$

— Cost of Analytical Equipment (C_{AN})

$$C_{AN} = 1.6 \times 10^6 \qquad (\$)$$

— Cost of Tritiated Waste Treatment (C_{TWT})

$$C_{TWT} = 1.2 \times 10^6 \qquad (\$)$$

— Cost of Glove Box Detritiation Unit (C_{GB})

$$C_{GB} = 1.6 \times 10^6 \qquad (\$)$$

— Cost of Tritiated Water Recovery Unit (C_{WR})

$$C_{WR} = 0.2 \times 10^6 \left(\frac{Vol}{15}\right)^{0.6} + 0.4 \times 10^6 \left(\frac{Vol}{15}\right)^{0.5} + 0.1 \times 10^6 \left(\frac{Vol}{15.7}\right)^{0.7} + 0.05 \times 10^6 \left(\frac{Vol}{15}\right)^{0.5} + 1 \times 10^6 + 3 \times 10^6 \qquad (\$)$$

— Cost of Solid Waste Processing (C_{SW})

$$C_{SW} = 1.3 \times 10^6 \qquad (\$)$$

— Cost of Atmospheric Cleanup (C_{AT})

This cost is computed independently for each area using this equation.

$$C_{AT} = 2.3 \times 10^6 \left[V_{pp} \ (60)/28.4\right]^{0.7} \qquad (\$)$$

— Cost of Monitors (C_{MON})

This cost is computed for each area (four assumed) using this equation.

$$C_{MON} = 0.5 \times 10^6 \qquad (\$)$$

— Cost of Data Acquisition (C_{DAT})

$$C_{DAT} = 16 \ (0.02 \times 10^6) + 7 \ (0.2 \times 10^6) + 3.7 \times 10^6 + 8 \ (0.05 \times 10^6) \qquad (\$)$$

— Cost of Blanket Tritium Recovery (C_{BR})

$$C_{BR} = \frac{5000 \ (T_{BRD})}{(\text{Unit Tritium Concentration})^{1/2} + 0.0001} \qquad (\$)$$

— Cost of Miscellaneous (C_{MIS})

$$C_{MIS} = 1.1 \times 10^6 \qquad (\$)$$

— Total Cost (Summation of Above Costs)

SAMPLE MODULE OUTPUT (TRITIUM CODE)

Tables 42 and 43 (Cases 1 and 2) are presented in which the plasma recycle at the edge is decreased, thus decreasing the fractional burn. This, in turn, increases the throughput rates between processing units.

PROCESS FLOW DIAGRAM (TRITIUM CODE)

Two examples of the flow paths in tritium systems needed for a fusion reactor are shown in Figs. 80 and 81. These are not all-inclusive. Figure 82 is the tritium code flowchart.

REFERENCE

1. R. G. Clemmber, *TCODE — A Computer Code for Analysis of Tritium and Vacuum Systems for Tokamak Fusion Reactors*, ANL/FPP/TM-110, Argonne Natl. Lab., 1978.

Table 42. Fuel processing system (Case 1)

input :

fusion power (mw)	=	448.927
particle confinement time (sec)	=	1.983
particle recycle	=	0.000 ←
burn time (sec)	=	100.000
time between cycles (sec)	=	52.000
trit. fract. in d-t	=	0.500
ion density (ions/m**3)	=	1.207e+20
plasma volume (m**3)	=	267.142
cryo pump regen period (hr)	=	1.000
assum. post burn temp.(k)	=	573.000
post burn press. (torr)	=	1.330e-03
beam inj. time (sec)	=	6.000
beam power (mw)	=	54.834
beam energy (kev)	=	0.000

results :

cycles/day	=	568.421
availability	=	0.169
trit. burn fraction (including recycle)	=	0.019 ←
trit. burned/cyc (g/cyc)	=	0.079
trit. burned/day (g/d)	=	45.162
trit. in gas chrg/cyc (g/cyc)	=	0.081

Table 42 (continued)

trit. fueled/cyc (g/cyc)	=	4.144
trit. fueled/day (g/d)	=	2355.456 ←
trit. fueled/yr (g/yr)	=	145296.310
trit. decay loss/year (g/yr)	=	103.900
trit. consumed/year (g/yr)	=	1497.727
deut. burned/cycle (g/yr)	=	0.053
deut. burned/day (g/d)	=	30.259
deut. consumed/yr (g/yr)	=	1866.502
deut. inj.(beams)(g/d)	=	0.000
deut. pumped in nb/d (g/d)	=	0.000
deut. input/day (g/d)	=	1608.857
deut. needed/day (g/d)	=	1608.857
deut. needed/cycle (g/cyc)	=	2.830

atmospheric detritiation system

input :

max cred.trit. release(g)	=	10.000

results :

Table 42 (continued)

	reactor building	hot cell facility	tritium processing building	radwaste building
building volume (m**3)	125714.	84965.	52200.	16000.
allow. trit. conc. (uCi/m**3)	50.	50.	50.	50.
ds removal eff.	0.99	0.99	0.99	0.99
time for removal (hr)	72.0	72.0	24.0	72.0
at. vol. flow (% bld.vol/min)	0.225	0.234	0.737	0.273
cleanup flow rate (m**3/sec)	4.720	3.320	6.416	0.729
trit. vented during proc. (Ci)	0.000	0.000	0.009	0.000
trit. released after proc. (Ci)	6.286	4.248	2.610	0.800
detrit. sys. cost (K$)	11504.0	8992.2	14261.9	3112.5

Total detrit. system cost (K$) = 37870.7

tritium inventory

pumps (g)	=	98.17
storage (g)	=	1354.86
surge tank (g)	=	10.71
fuel cleanup (g)	=	63.56
separation unit (g)	=	285.61
breeding blanket (g)	=	0.00
blanket recovery (g)	=	0.00
pellet fueler (g)	=	42.43
trit. neutral beam (g)	=	0.00
deut. neutral beams (g)	=	0.00
total (g)	=	1855.35

Table 42 (continued)

cost summary (K$)

tritium receiving system	=	200.0
shipping containers	=	120.0
deuterium storage	=	2269.4
tritium storage	=	3387.2
fuel cleanup	=	2131.6 ←
isotopic separation system	=	6479.0 ←
analysis system	=	1600.0
tritium waste treatment system	=	1200.0
glove box detrit. system	=	1600.0
tritiated water recovery unit	=	4000.0
tritium waste processing sys.	=	1300.0
building detrit. systems	=	37870.7
tritium monitors	=	2000.0
tritium systems control	=	5820.0
Total tritium system cost (K$)	=	71077.8

all done

Table 43. Fuel processing system (Case 2)

input :

fusion power (mw)	=	448.927
particle confinement time (sec)	=	1.983
particle recycle	=	0.800
burn time (sec)	=	100.000
time between cycles (sec)	=	52.000
trit. fract. in d-t	=	0.500
ion density (ions/m**3)	=	1.207e+20
plasma volume (m**3)	=	267.142
cryo pump regen period (hr)	=	1.000
assum. post burn temp.(k)	=	573.000
post burn press. (torr)	=	1.330e-03
beam inj. time (sec)	=	6.000
beam power (mw)	=	54.834
beam energy (kev)	=	0.000

results :

cycles/day	=	568.421
availability	=	0.169
trit. burn fraction (including recycle)	=	0.082 ←
trit. burned/cyc (g/cyc)	=	0.079
trit. burned/day (g/d)	=	45.162
trit. in gas chrg/cyc (g/cyc)	=	0.081

Table 43 (continued)

trit. fueled/cyc (g/cyc)	=	0.892
trit. fueled/day (g/d)	=	507.221 ←
trit. fueled/yr (g/yr)	=	31287.921
trit. decay loss/year (g/yr)	=	87.185
trit. consumed/year (g/yr)	=	1481.013
deut. burned/cycle (g/yr)	=	0.053
deut. burned/day (g/d)	=	30.259
deut. consumed/yr (g/yr)	=	1866.502
deut. inj.(beams)(g/d)	=	0.000
deut. pumped in nb/d (g/d)	=	0.000
deut. input/day (g/d)	=	370.540
deut. needed/day (g/d)	=	370.540
deut. needed/cycle (g/cyc)	=	0.652

atmospheric detritiation system

input :

max cred.trit. release(g)	=	10.000

results :

Table 43 (continued)

	reactor building	hot cell facility	tritium processing building	radwaste building
building volume (m**3)	125714.	84965.	52200.	16000.
allow. trit. conc. (uCi/m**3)	50.	50.	50.	50.
ds removal eff.	0.99	0.99	0.99	0.99
time for removal (hr)	72.0	72.0	24.0	72.0
at. vol. flow (% bld.vol/min)	0.225	0.234	0.737	0.273
cleanup flow rate (m**3/sec)	4.720	3.320	6.416	0.729
trit. vented during proc. (Ci)	0.000	0.000	0.009	0.000
trit. released after proc. (Ci)	6.286	4.248	2.610	0.800
detrit. sys. cost (K$)	11504.0	8992.2	14261.9	3112.5

Total detrit. system cost (K$) = 37870.7

tritium inventory

pumps (g)	=	21.16
storage (g)	=	1354.86
surge tank (g)	=	2.31
fuel cleanup (g)	=	45.08
separation unit (g)	=	100.79
breeding blanket (g)	=	0.00
blanket recovery (g)	=	0.00
pellet fueler (g)	=	32.68
trit. neutral beam (g)	=	0.00
deut. neutral beams (g)	=	0.00
total (g)	=	1556.88

Table 43 (continued)

cost summary (K$)

tritium receiving system	=	200.0
shipping containers	=	120.0
deuterium storage	=	2269.4
tritium storage	=	3387.2
fuel cleanup	=	1640.0 ←
isotopic separation system	=	3601.1 ←
analysis system	=	1600.0
tritium waste treatment system	=	1200.0
glove box detrit. system	=	1600.0
tritiated water recovery unit	=	4000.0
tritium waste processing sys.	=	1300.0
building detrit. systems	=	37870.7
tritium monitors	=	2000.0
tritium systems control	=	5820.0
Total tritium system cost (K$)	=	67708.4

all done

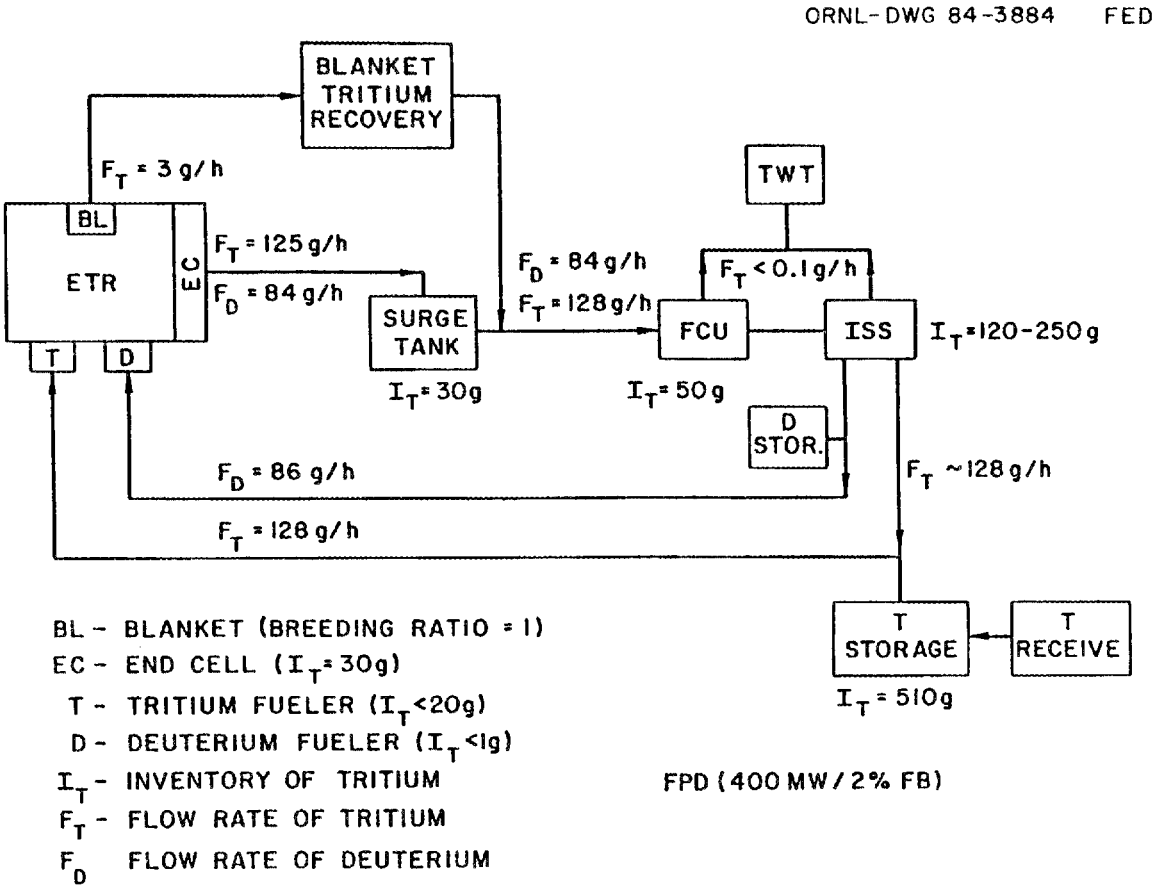

Fig. 80. Example of flow path in tritium systems for a fusion reactor.

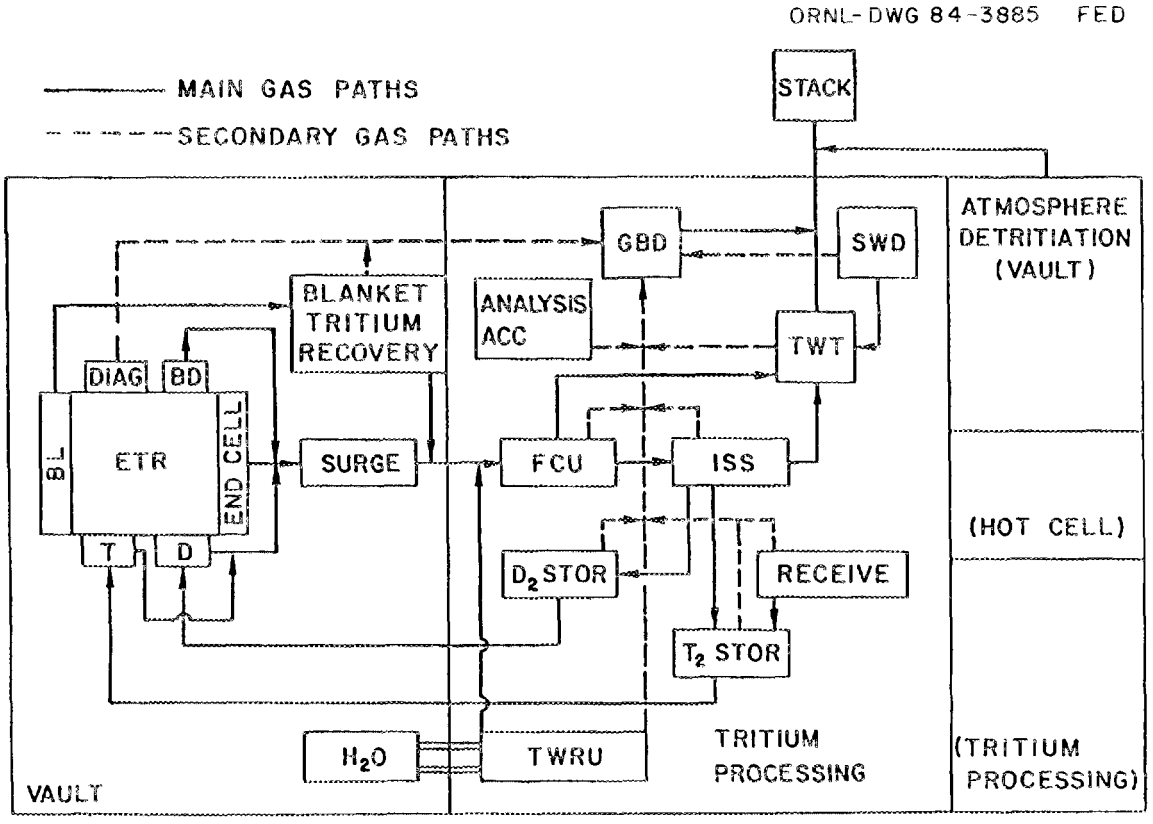

Fig. 81. Sample flow path in tritium systems needed for a fusion reactor.

ORNL--DWG 84-3891 FED

FLOW DIAGRAM
(TRITIUM CODE)

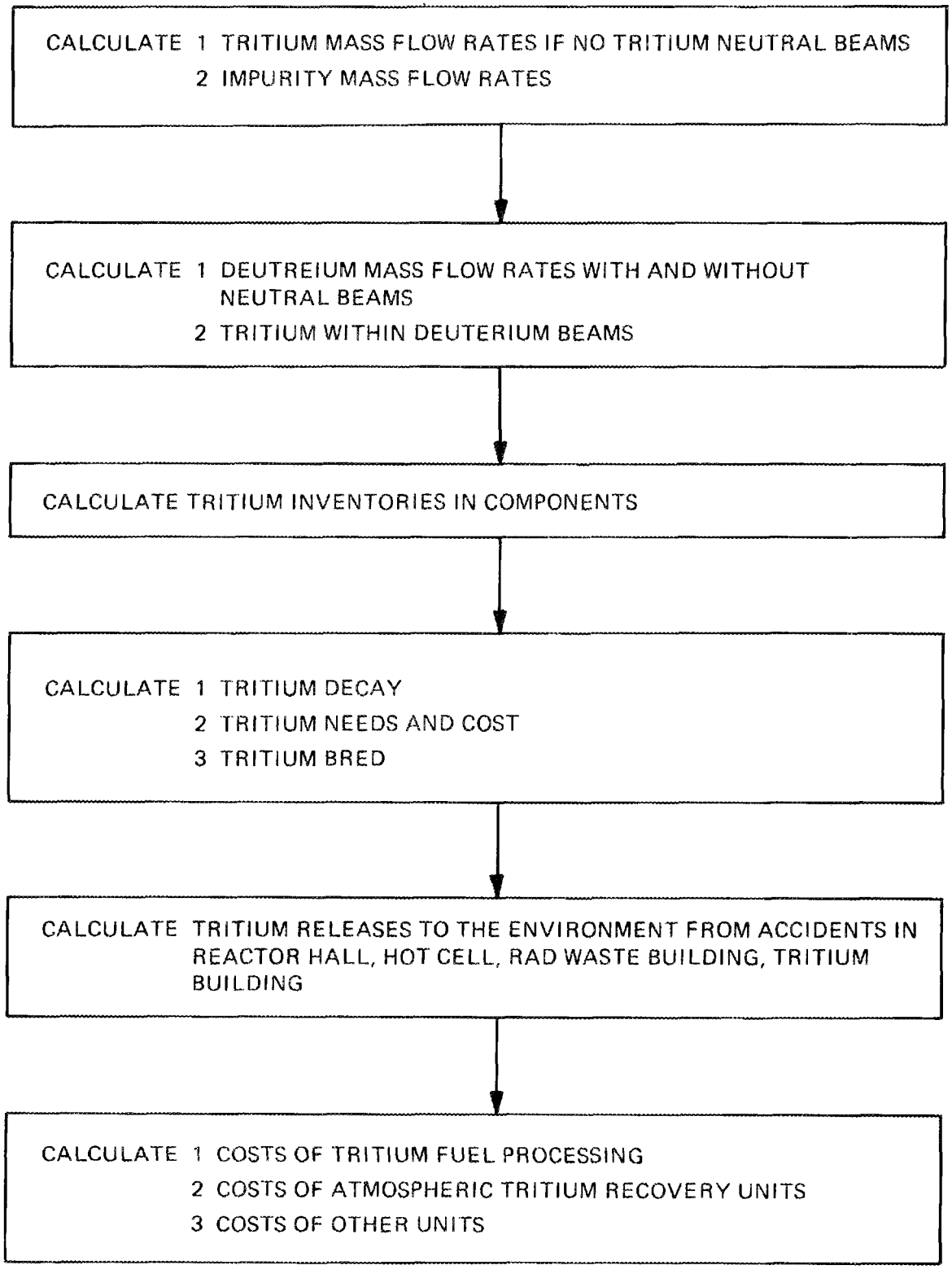

Fig. 82. Tritium code flowchart.

13. FUELING SYSTEM MODULE

The fuel system code calculates pertinent design requirements and cost data for the pellet injectors, gas injectors, and supporting systems. The code reads the user's data file and selected data from the physics code, fuel processing code, TF coil code, and the first wall and shield code. These data are used to compute requirements for pellet velocity, pellet weight, pellet rate, vacuum power, helium refrigeration, nitrogen refrigeration, and cost of major equipment. The printout includes pertinent input and calculated output data.

CODE BASIS

The code is based on having a combination of a gas injection system similar to that shown in Fig. 83 and a pellet injector system similar to that shown in Fig. 84. The gas injection system provides for selecting the gas composition and controlling the flow of the gas to a number of injector nozzles. Selector valves are provided to utilize any combination of the injector nozzles. The total number of nozzles provided, NONOZ, is a user-input number. The pellet injecting system is based on a two-channel centrifugal injector, whose system flow diagram is given in Fig. 84. The injector has the capability of injecting mixed D-T pellets or alternating deuterium and tritium pellets. The pellet injector includes the pellet rate controller but not the computer that controls it, which is a part of the I&C subsystem. The pellet injector includes other equipment such as the interfacing pellet drift tube, isolation valves, and support structure shown in Fig. 85.

CODE INPUT/OUTPUT DATA

The fueling code uses the input data defined in Tables 44 and 45. The user-input data, defined in Table 44, list the mnemonic, the principal use of the data, the expected range, and the mnemonic description. A cylindrical pellet is assumed with the length equal to diameter of the pellet. The transmission efficiency, EFFT, is the ratio of the frozen pellet mass to the total mass of the fuel needed to make the pellet and

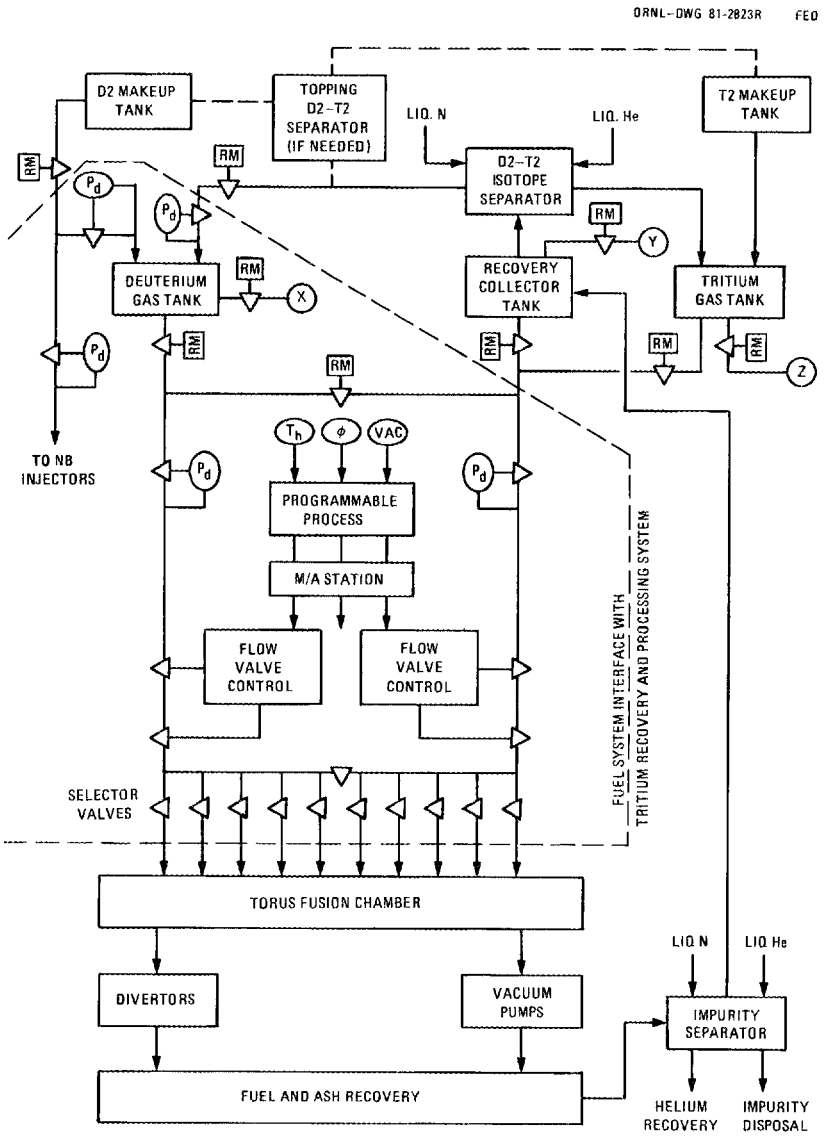

Fig. 83. Gas injection portion of fueling system.

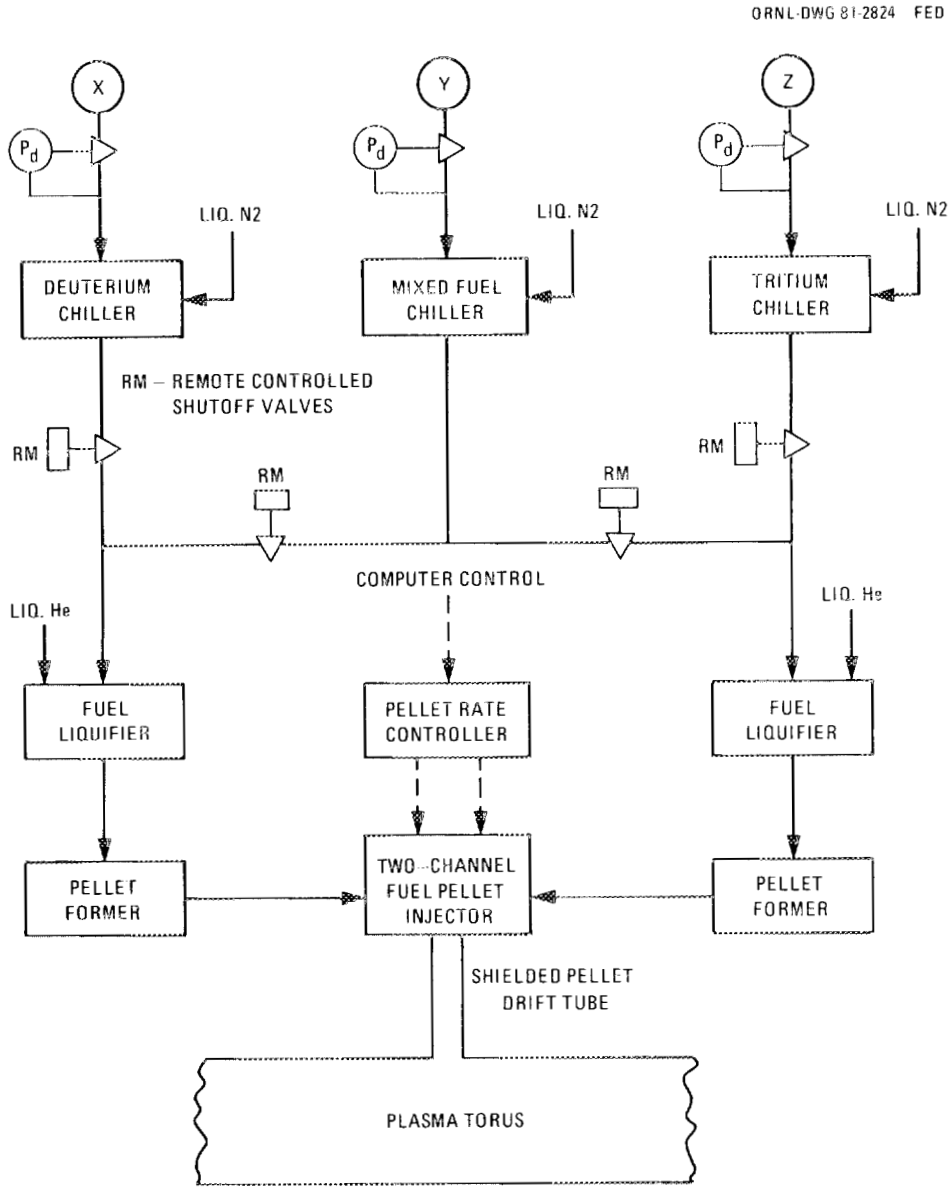

Fig. 84. Pellet injection portion of fueling system.

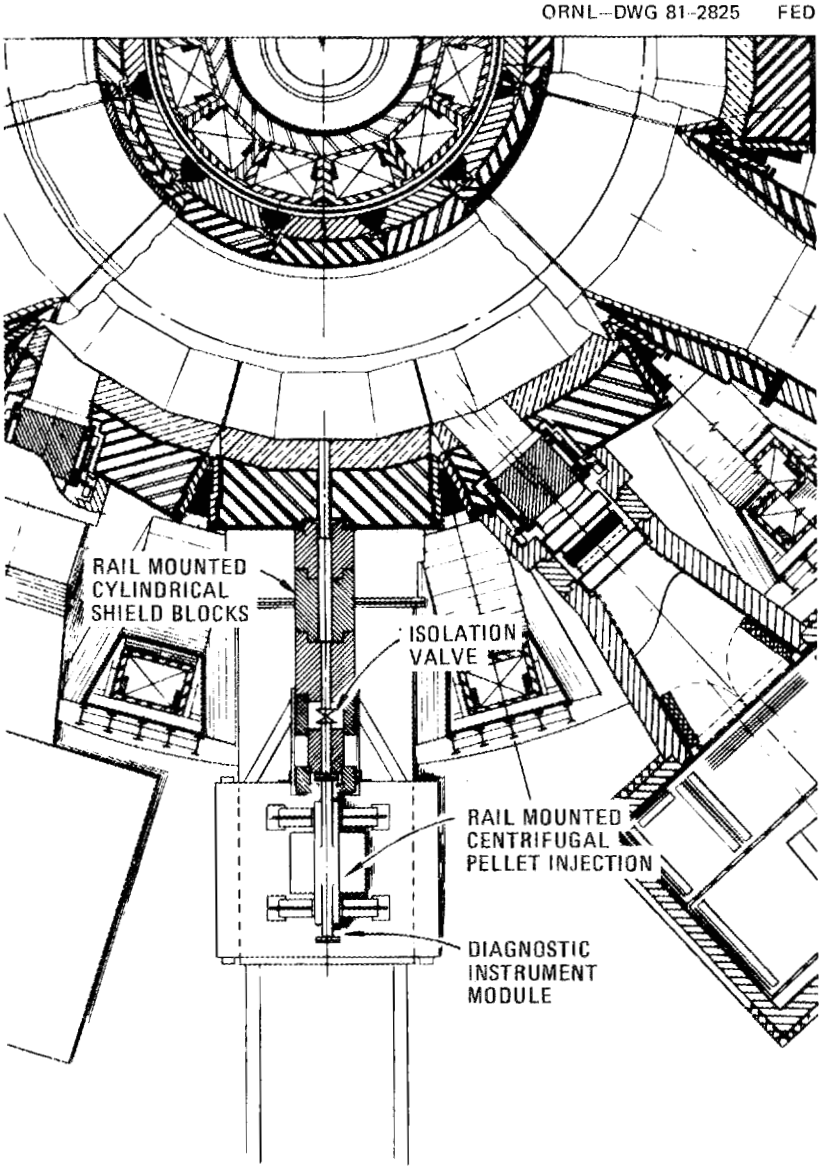

Fig. 85. Pellet injector and associated equipment.

Table 44. User-input data description

Code mnemonic	Code use	Expected range	Mnemonic description
FPEN	Calculate pellet velocity	0.200 0.300	Pellet penetration, fraction of the plasma minor radius, A
MWT	Calculate pellet velocity, mass, refrigeration, and vacuum	2.0 6.0	Molecular weight of the fuel pellet
NPF	Calculate pellet injector cost	1 3	Number of fuel pellet injectors
NGNOZ	Calculate gas puffer system cost	4 16	Number of fuel gas injector nozzles
DISPR	Calculate pellet injector isolation valve and drift tube cost	0.2 1.0	Pellet scatter angle, deg
EFFN2	Calculate liquid nitrogen refrigeration	0.3 0.7	Liquid nitrogen cooling effectiveness
EFFHE	Calculate liquid helium refrigeration	0.2 0.6	Liquid helium cooling effectiveness
EFFT	Calculate vacuum requirement	0.1 0.9	Vacuum system transmission efficiency (fraction of the focal feed that enters the drift tube as a frozen pellet)
EFFV	Calculate vacuum power requirement	0.3 0.7	Efficiency of the vacuum system
DPMM	Calculate mass of the pellet	2.0 4.0	Pellet diameter, mm

Table 45. Input data from other systems code

Code mnemonic	Code use	Expected range	Mnemonic description
A	Calculate pellet penetration and velocity	0.5 2.0	Plasma minor radius, m
NI	Calculate pellet velocity	0.5E20 4.0E20	Line-averaged plasma density, atoms/m^3
TI	Calculate pellet velocity	5.0 20.0	Line-averaged plasma temperature, keV
TFULC	Calculate pellet rate	5.0 40.0	Tritium injected per burn cycle, g
TBURN	Calculate pellet rate	20.0 2000.0	Cycle burn time, s
TFTHK	Calculate pellet drift tube length	0.5 1.5	TF coil radial thickness, m

inject it into the drift tube. The number is low (0.2) for a pneumatic injector, where a large part is needed to accelerate the pellet, but comparatively high (0.8) for a centrifugal injector, where losses are attributed only to the pellet formation. The diameter of the pellet, DPMM, is a user input. The mass of the pellet should be about 10% of the plasma mass. For TFCX the corresponding pellet diameter is about 3 mm. The pellet penetration, FPEN, should be selected so that the pellet velocity is within the state of the art.

The other inputs given in Table 45 are selected outputs of other codes. This table lists the mnemonic, principal use, the expected range, and description in the same format as the user Table 44. The plasma temperature, density, and radius are data needed to calculate the pellet velocity. The fueling rate depends on the tritium needed per burn cycle, the cycle time, and the fuel composition, which is assumed to be 50% deuterium atoms and 50% tritium atoms. Geometry data are read from the TF coil and the first wall and shield code data files. They are needed to determine the cost of the pellet drift tube and its support structure.

The fueling code calculates and prints out the data given in Table 46. The format of this table is similar to Tables 44 and 45. Only the total cost CFUELS is an input to another tokamak systems code. The total electric power and refrigeration requirements could also be inputs to the ac power and cryogenic codes, but they are small compared to other power and cryogenic loads and are, therefore, ignored as inputs to other codes.

Table 47 contains input data for three cases whose outputs are given in Tables 48–50. Key differences in the input data are underlined for ease of comparison. The output tables contain enough input data to identify each case clearly. Note that the pellet injector velocity is strongly dependent on the pellet penetration into the plasma and the plasma temperature.

Table 46. Calculated printout data

Code mnemonic	Code use	Expected range	Mnemonic description
TDPM	Print out	1.0E-3 5.0E-2	Pellet mass, g
PERATE	Print out	2.0 30.0	Pellet rate, s^{-1}
VELOP	Print out	500.0 3,000.0	Pellet velocity, m/s
PPEN	Print out	0.20 0.30	Pellet penetration into the plasma, m
LPTUBE	Print out	3.0 5.0	Length of pellet drift tube, m
PINJ	Print out	1.0 10.0	Peak power to centrifugal pellet injector, kW
VAC	Print out	2,000.0 10,000.0	Centrifugal injector vacuum requirement kW
PVAC	Print out	1.0 10.0	Electric power to vacuum system, kW
LN2	Print out	100.0 1,000.0	Liquid nitrogen refrigeration, W
LHE	Print out	50.0 300.0	Liquid helium refrigeration, W
PTOT	Print out	20.0 200.0	Total electric power requirement, kW
CFUELS	Print out input to cost code	1.0 5.0	Total cost of fueling system, $ million

Table 47. Input data for three cases showing the influence of pellet penetration depth and plasma temperature on injection velocity

Case 1	Case 2	Case 3
FPEN = 0.210	FPEN = 0.230	FPEN = 0.210
MWT = 5.0	MWT = 5.0	MWT = 5.0
NOINJ = 2.0	NOINJ = 2.0	NOINJ = 2.0
NONOZ = 1.0	NONOZ = 1.0	NONOZ = 1.0
DISPR = 1.0	DISPR = 1.0	DISPR = 1.0
EFFHE = 0.5	EFFHE = 0.5	EFFHE = 0.5
EFFN2 = 0.5	EFFN2 = 0.5	EFFN2 = 0.5
EFFV = 0.5	EFFV = 0.5	EFFV = 0.5
EFFT = 0.8	EFFT = 0.8	EFFT = 0.8
DPMM = 3.2	DPMM = 3.2	DPMM = 3.2
A = 1.1	A = 1.1	A = 1.1
NI = 2.000E+20	NI = 2.000E+20	NI = 2.000E+20
TI = 12.0	TI = 12.0	TI = 15.0
TFULC = 11.5	TFULC = 11.5	TFULC = 11.5
TBURN = 187.0	TBURN = 187.0	TBURN = 187.0
DAGO = 2.2	DAGO = 2.2	DAGO = 2.2
TFTHK = 1.0	TFTHK = 1.0	TFTHK = 1.0
Output data in Table 48	Output data in Table 49	Output data in Table 50

Table 48. Fuel system code output data for Case 1

Plasma minor radius, m (A)	1.100
Plasma ion density, No./m^3 (NI)	2.000E+20
Plasma ion temperature, keV (TI)	12.00
Burn time, s (TBURN)	187.0
Tritium injected per cycle, g (TFULC)	11.50
Distance between shield and coil, m (DAGO)	2.200
TF coil thickness, m (TFTHK)	1.000
Number of injectors	2.000
Number of nozzles	10.00
TD pellet diameter, mm	3.200
TD pellet weight, g	6.6683E-03
Pellet rate, No./s	15.40
Pellet velocity, m/s	1958.0
Pellet penetrations, m	0.2310
Pellet dispersion angle, deg	1.000
Shielded pellet tube length, m	4.200
Electric power for injectors, kW	4.833
Vacuum requirement, L/m	4042.0
Electric power for vacuum, kW	6.063
Liquid nitrogen refrigeration, W (LN2)	501.2
Liquid helium refrigeration, W (LHE)	125.7
Total electrical power, kW (PTOT)	75.75
Total fuel system cost, $ million (CFUELS)	2.710

Table 49. Fuel system code output data for Case 2

Plasma minor radius, m (A)	1.100
Plasma ion density, No./m^3 (NI)	2.000E+20
Plasma ion temperature, keV (TI)	12.00
Burn time, s (TBURN)	187.0
Tritium injected per cycle, g (TFULC)	11.50
Distance between shield & coil, m (DAGO)	2.200
TF coil thickness, m (TFTHK)	1.000
Number of injectors	2.000
Number of nozzles	10.00
TD pellet diameter, mm	3.200
TD pellet weight, g	6.6683E-03
Pellet rate, No./s	15.40
Pellet velocity, m/s	2572.0
Pellet penetrations, m	0.2530
Pellet dispersion angle, deg	1.000
Shielded pellet tube length, m	4.200
Electric power for injectors, kW	7.617
Vacuum requirement, L/m	4042.0
Electric power for vacuum, kW	6.063
Liquid nitrogen refrigeration, W (LN2)	501.2
Liquid helium refrigeration, W (LHE)	125.7
Total electrical power, kW (PTOT)	78.54
Total fuel system cost, $ million (CFUELS)	3.545

Table 50. Fuel system code ouput data for Case 3

Plasma minor radius, m (A)	1.100
Plasma ion density, No./m^3 (NI)	2.000E+20
Plasma ion temperature, keV (TI)	15.00
Burn time, s (TBURN)	187.0
Tritium injected per cycle, g (TFULC)	11.50
Distance between shield & coil, m (DAGO)	2.200
TF coil thickness, m (TFTHK)	1.000
Number of injectors	2.000
Number of nozzles	10.00
TD pellet diameter, mm	3.200
TD pellet weight, g	6.6683E-03
Pellet rate, No./s	15.40
Pellet velocity, m/s	2861.0
Pellet penetrations, m	0.2310
Pellet dispersion angle, deg	1.000
Shielded pellet tube length, m	4.200
Electric power for injectors, kW	9.186
Vacuum requirement, L/m	4042.0
Electric power for vacuum, kW	6.063
Liquid nitrogen refrigeration, W (LN2)	501.2
Liquid helium refrigeration, W (LHE)	125.7
Total electrical power, kW (PTOT)	80.11
Total fuel system cost, $ million (CFUELS)	4.016

PRINCIPAL FUEL SYSTEM CODE EQUATIONS

The code reads the input data given in Tables 44 and 45 and uses the following equations to calculate design requirements data and cost given in Table 46.

Total tritium/deuterium mass fueling rate, TDMDOT, grams cycle:

TDMDOT = 1.67 TFULC/TBURN, grams/second ,

TFULC, tritium injected per burn cycle, grams ,

TBURN, cycle burn time, seconds .

The equation for TDMDOT assumes that the fueling consists of injecting an equal number of deuterium and tritium atoms.

Mass of a tritium deuterium pellet, TDPM, grams (cylindrical) pellet geometry with D = H:

$$TDPM = \text{density (volume of pellet)} = \rho(\pi/4)D^3$$

$$= (\pi/4)(\rho/5)(MWT)D^3 = (\pi/4)(0.259/5)(MWT)D^3 \quad ,$$

$$TDPM = 0.0407(MWT)(DPMM/10)^3 \quad ,$$

MWT = molecular weight of the pellet = 5 ,

DPMM = diameter of the pellet (millimeters) .

Vacuum requirement, VAC, liters/minute:

$$VAC = (1\text{-}EFFT)\ TMDOT/DENSITY \text{ at } 100\ K,\ 1 \times 10^{-2}\ torr \quad ,$$

$$DENSITY = 3.95 \times 10^{-5}\ MWT \quad ,$$

$$VAC = 1.52 \times 10^{6}\ (1.0\text{-}EFFT)\ TMDOT/MWT \quad .$$

EFFT is the fraction of the fuel feed that enters the drift tube as a frozen pellet.

Electric power required for the vacuum system, PVAC, kW:

PVAC = 0.0015 VAC/EFFV ,

where EFFV is the efficiency of the vacuum system.

Liquid nitrogen requirement to chill room temperature (300 K) fuel gas to 77 K, LH2, watts:

LN2 = 12,200 (TDMDOT)/[(MWT)(EFFN2)] ,

MWT = molecular weight of the fuel = 5.0 for D-T ,

EFFN2 = liquid nitrogen cooling effectiveness, ∿0.5 .

Electrical power for nitrogen refrigeration, PLN2, kW:

PLN2 = 4(LN2)/1000 .

Liquid helium requirement to convert 77 K fuel to 10 K frozen pellet, LHE, watts:

LHE = 3060 (TDMDOT)/[(MWT)(EFFHE)] ,

EFFHE = liquid hydrogen cooling effectiveness, ∿0.5 .

Electrical power for helium refrigeration, PLHE, kW:

PLHE = 0.5 (LHE) .

Pellet velocity needed to penetrate the plasma to FPEN, a fraction of the plasma minor radius:

$$VELOP = 2.1E\text{-}5A(TI)^{1.7}\ (FPEN)^{3}\ (NI)^{0.33}\ (MWT)^{0.22}/(TDPM)^{0.56}$$

Table Input Data: TI = plasma temperature, keV,

NI = plasma density, number/m^3,

TDPM = pellet mass, g,

A = plasma minor radius.

Pellet injector peak electric power, PINI, kW:

$$PINJ = 0.5(NPF)\ [1 + (VELDP/1000)^2] \quad ,$$

NPF = number of injectors .

Total electric power, PTOT, kW:

$$PTOT = PVAC + PINJ + PLN2 + PLHE \quad .$$

Length of pellet drift tube, LPTUBE, m:

$$LPTUBE = 1.0 + DAGO + TFTHK \quad ,$$

DAGO = distance between inside of TF coil and the outside of the shield, m ,

TFTHK = TF coil thickness, m .

Cost of pellet injectors, CINJ, $ million:

$$CINJ = 0.15\ NPF\ (2 + VELOP^2/IE6) \quad ,$$

NPF = number of injectors ,

VELOP = pellet velocity requirement .

Cost of gas puffing system, CGPUF, $ million:

$$CGPUF = 0.10 + 0.015\ NONOZ \quad ,$$

where NOHOZ is the number of fuel gas injection nozzles .

Cost of the pellet tube and support structures, CPTAS, $ million:

$$CPTAS = 0.075\ (NPF)\ (LPTUBE)\ (DISPR)^{0.5} \quad ,$$

where DISPR is the pellet dispersion angle in degrees .

Cost of pellet injector isolation valves, CISOV, $ million:

$$CISOV = 0.04\ (NPF)\ (DISPR) \quad ,$$

where DISPR is the pellet dispersion angle in degrees .

Total cost of the fuel system, CFUELS, $ million:

$$CFUELS = CINJ + CGPUF + CPTAS + CISOV \quad .$$

CODE FLOW DIAGRAM

The fueling code requires no logic decisions or iterations. Therefore, the simple flow computation diagram shown in Fig. 86 is applicable. The code reads data from the user files and the files from other codes. These data are used to make the performance requirements calculations, using the code equations defined above. The required performance data and the input data, NPF and NONOZ, are used to make the cost calculations. Finally, pertinent data are printed out before exiting from the code.

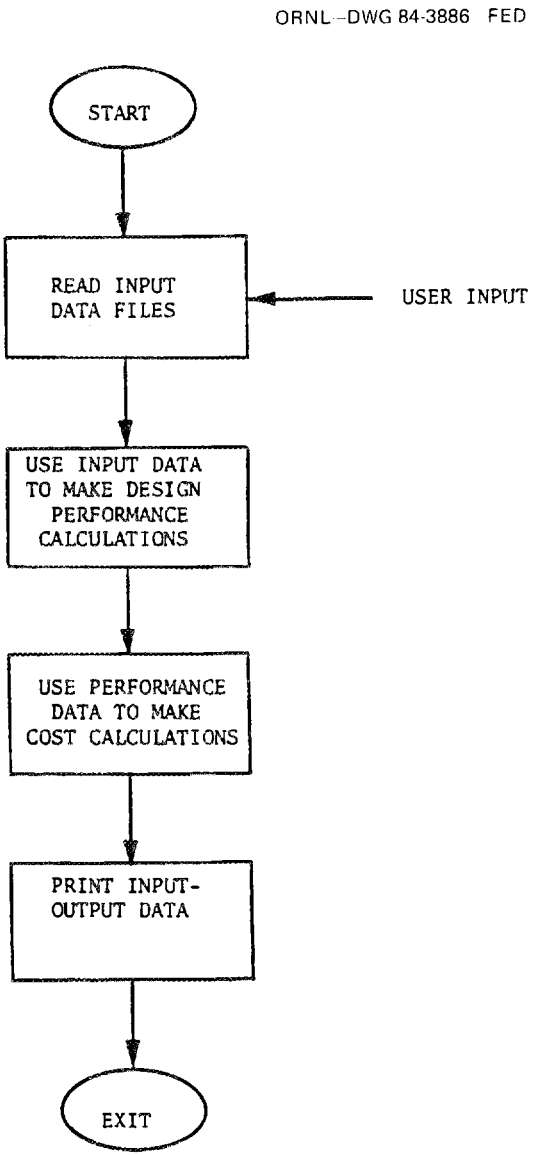

Fig. 86. Fuel system code flow diagram.

14. TF POWER CONVERSION MODULE

The TF power conversion code, TFCON, calculates design and cost data for the TF power conversion systems having resistive (R) coils, superconducting (SC) coils, or a combination of R and SC coils. The code takes pertinent input parameter data and computes and designs cost data for power supplies, bussing, load centers, coil protection equipment, and associated controls and instrumentation. It also provides an estimate of the floor space and building volume needed for the equipment.

Resistive coils do not need as much coil protection equipment as the superconducting coils, since they are always in the resistive state. Superconducting coils are operated near 4 K in the superconducting state, but they can go resistive if the design operating environment becomes unfavorable due to faulted equipment or operator error. Under these conditions, the SC coils must be discharged quickly without exceeding their design voltage. The resistive TF coils require much more power than the SC coils and, hence, more power conversion modules. The major equipment associated with each type of coil and the pertinent figures are given in Table 51.

CODE BASIS

The basis for the TF power conversion code is described herein with reference to Figs. 87 through 94 and Tables 52 and 53. The figures and tables are associated with the SC coil and R coils power conversion and protection equipment as identified in Table 51.

SC TF COIL POWER CONVERSION AND PROTECTION

Figure 87 illustrates the circuit connections and numbers of dump resistors, circuit breakers, varistors, bussing, and power supplies for a SC TF coil power conversion system. There are four dump resistors, Rd, and two grounding resistors, Rg, per coil. Each superconducting coil has a voltage limit that depends on the design. The design voltage in kilovolts is set equal to VTFSKV in the code. This voltage determines

Table 51. Major equipment listing

Equipment	SC coils	R coils
Dump resistors	Fig. 87, 94	NA
DC breakers	Fig. 87, 94	NA
Varistors	Fig. 87	NA
Bussing	Fig. 87, 92, 94	Fig. 91
C and I	Fig. 89 and Table 52	Table 53
Power supplies	Fig. 90	Fig. 93
Load center	Fig. 91	Figs. 92 and 93
Hybrid arrangement	Fig. 88	Fig. 88

ORNL-DWG 81-3363R2 FED

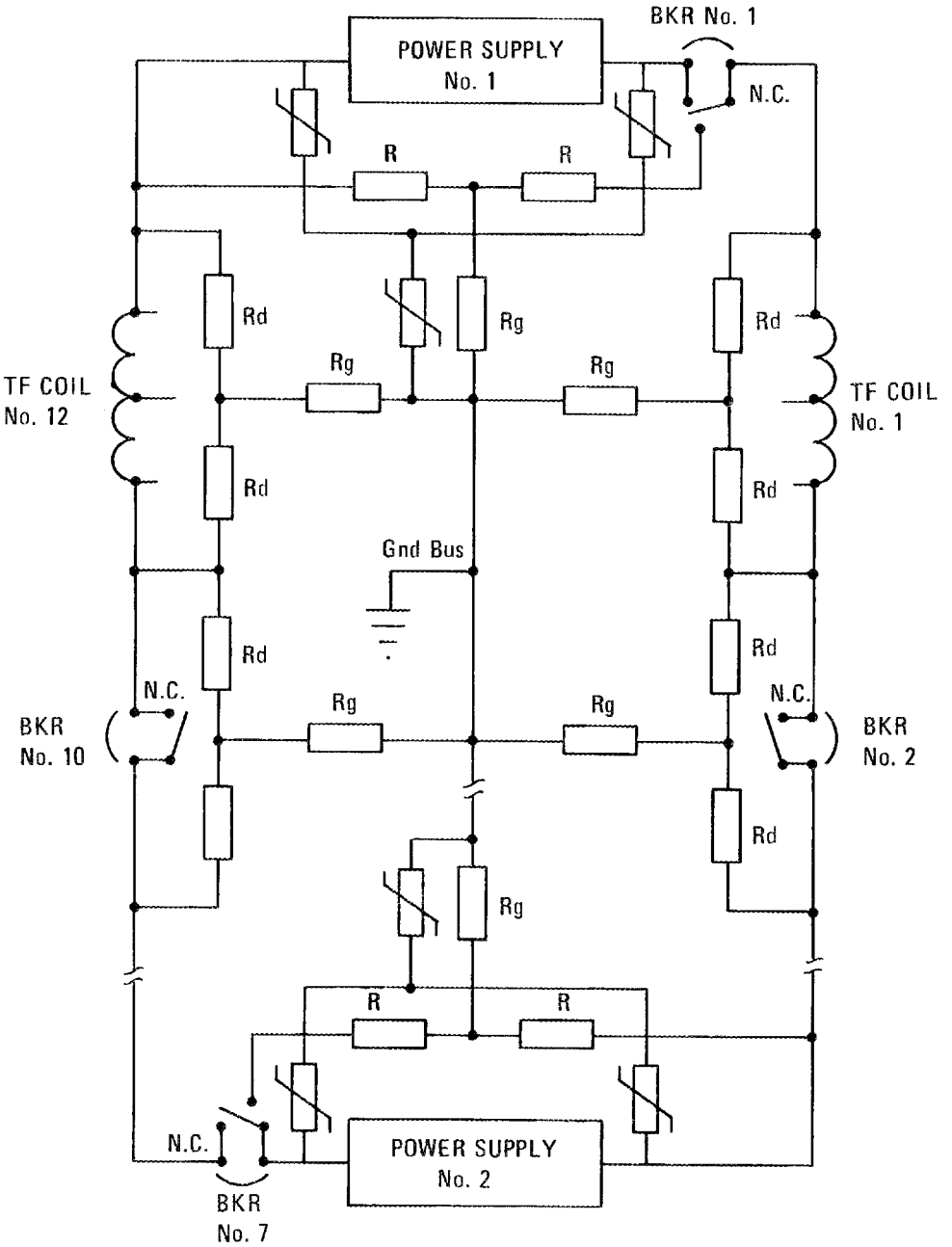

NOTE: Rd – Fast Dump Resistor – 0.20 Ohm
R – Slow Dump Resistor – 0.01 Ohm
Rg – Ground Resistor – 10.0 Ohm

Fig. 87. TF power conversion and protection system.

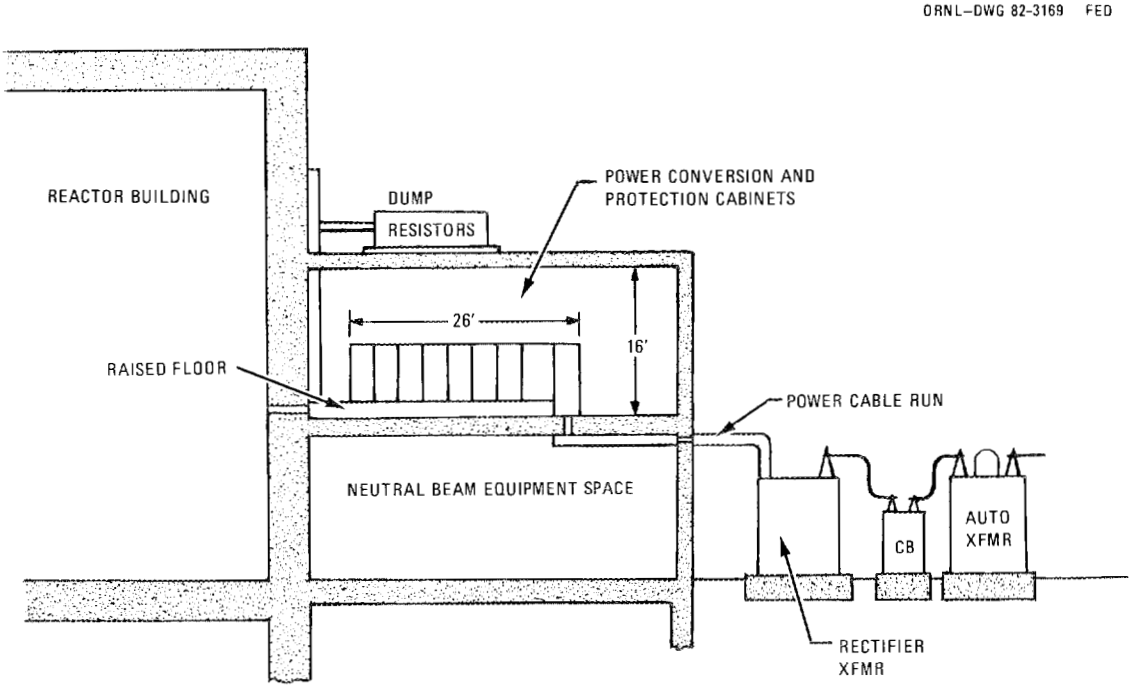

Fig. 88. Section view showing typical location of electrical.

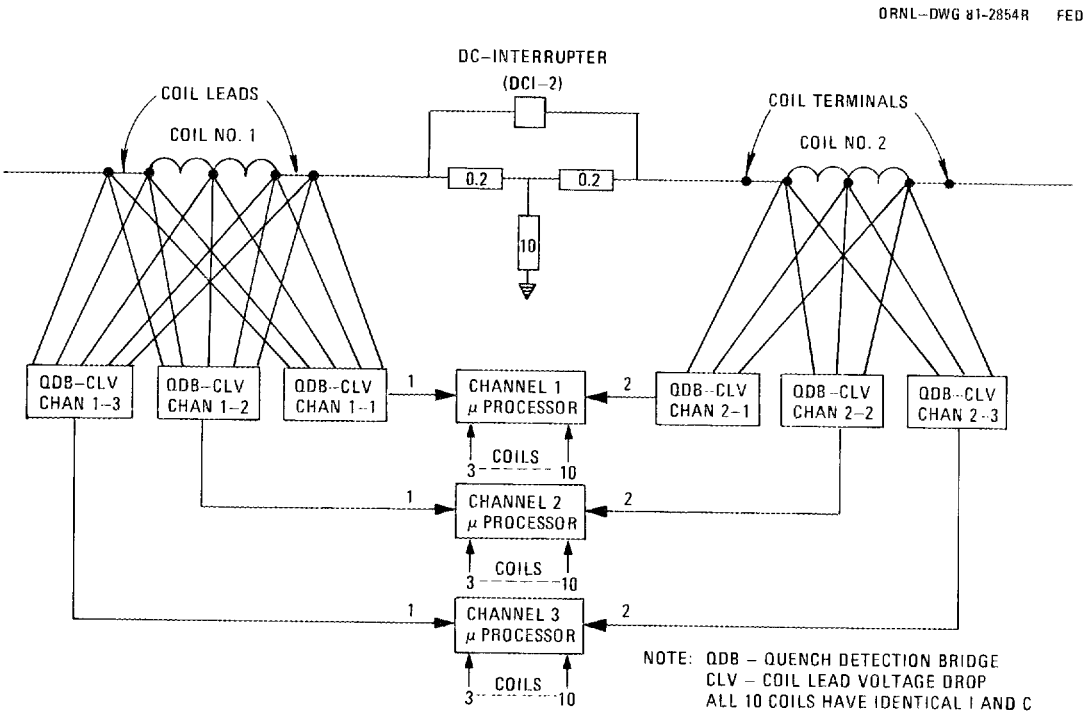

Fig. 89. Typical 3-channel signal conditioning for the TF coil protection system.

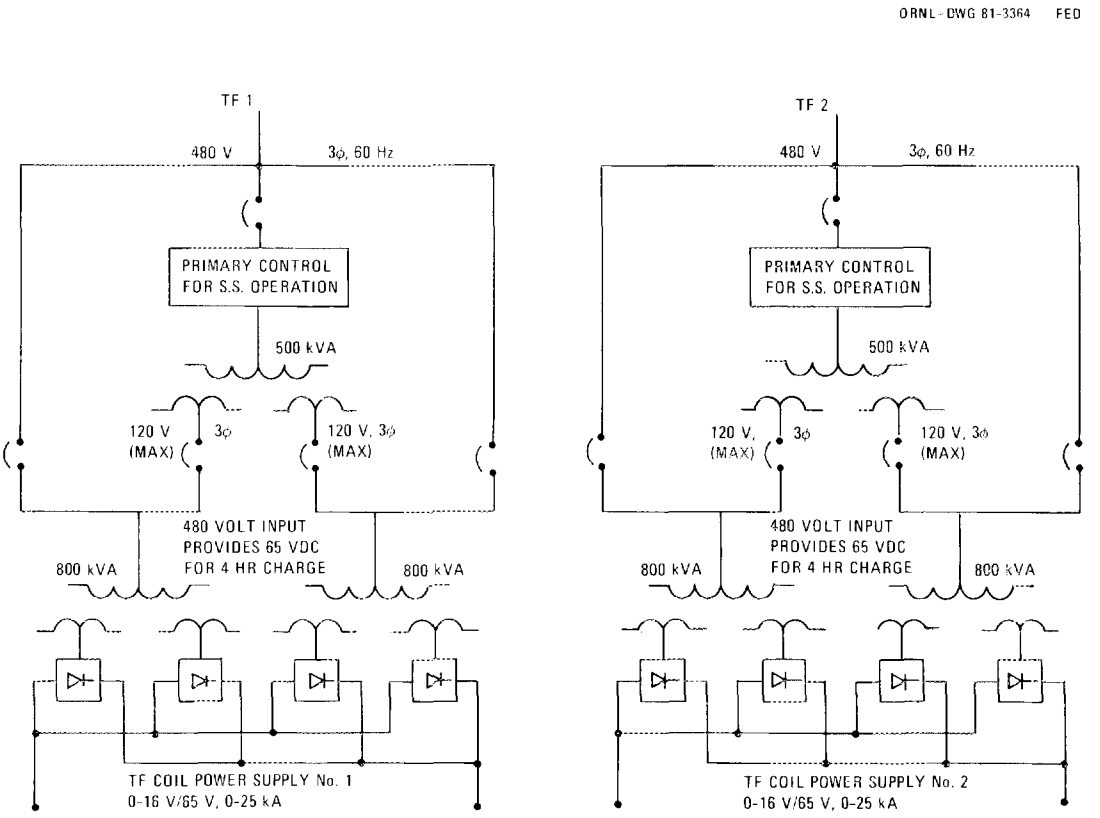

Fig. 90. One-line diagram of the TF coil 12-pulse power supplies.

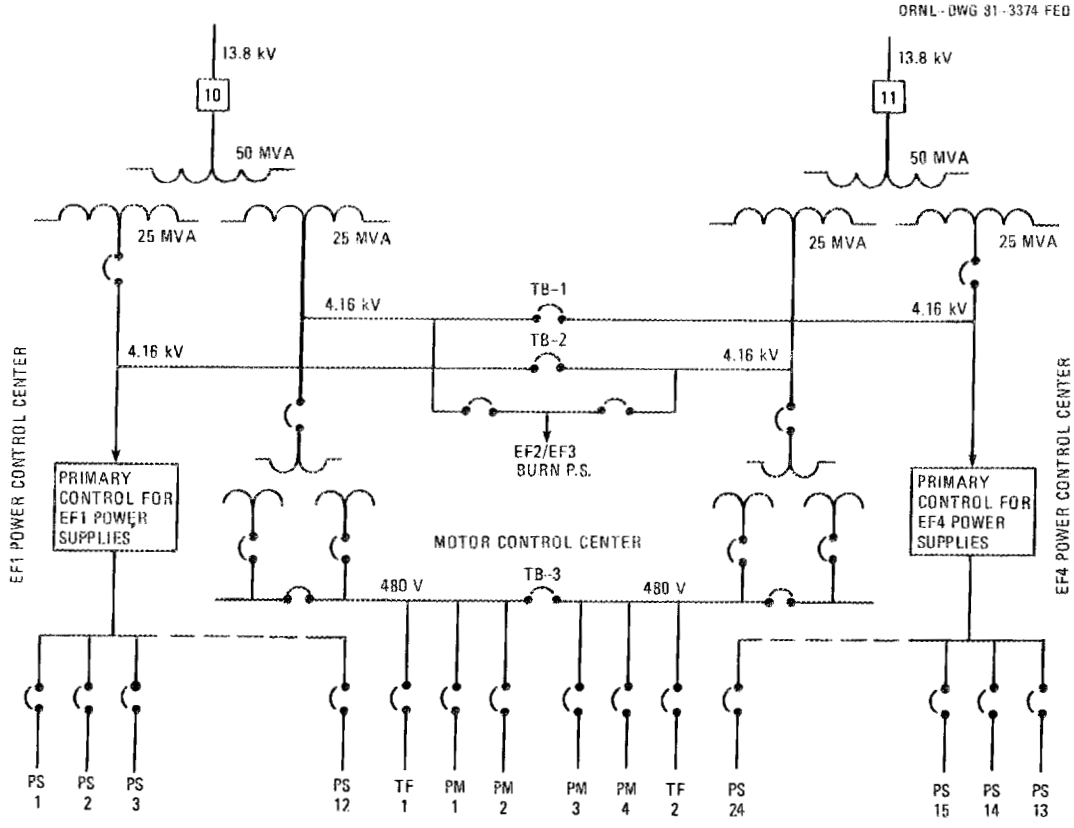

Fig. 91. One-line diagram of the load control centers for the utility line-driven power supplies of the EF and TF coils.

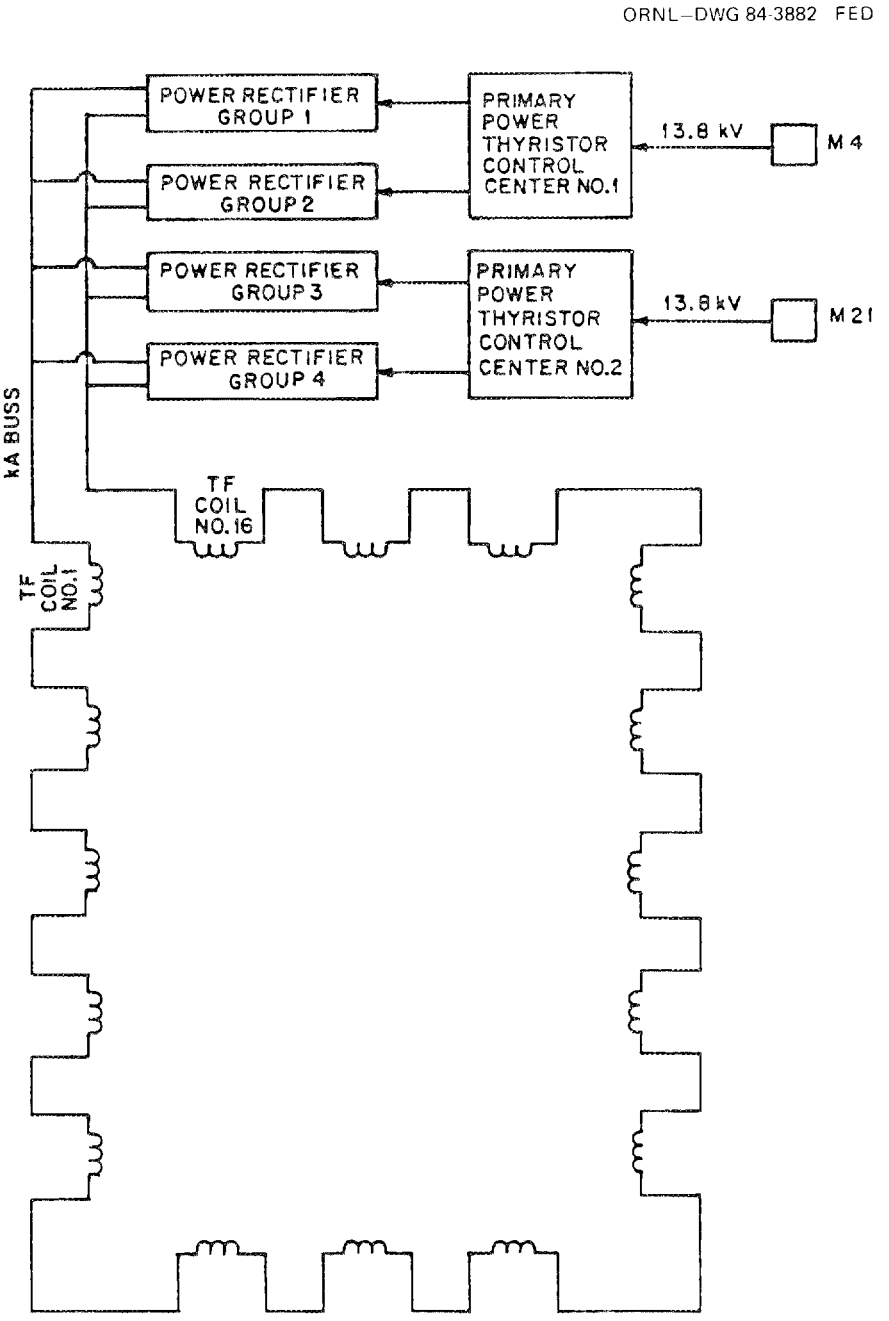

Fig. 92. Power conversion system for resistive TF coils.

ORNL–DWG 82-3999A FED

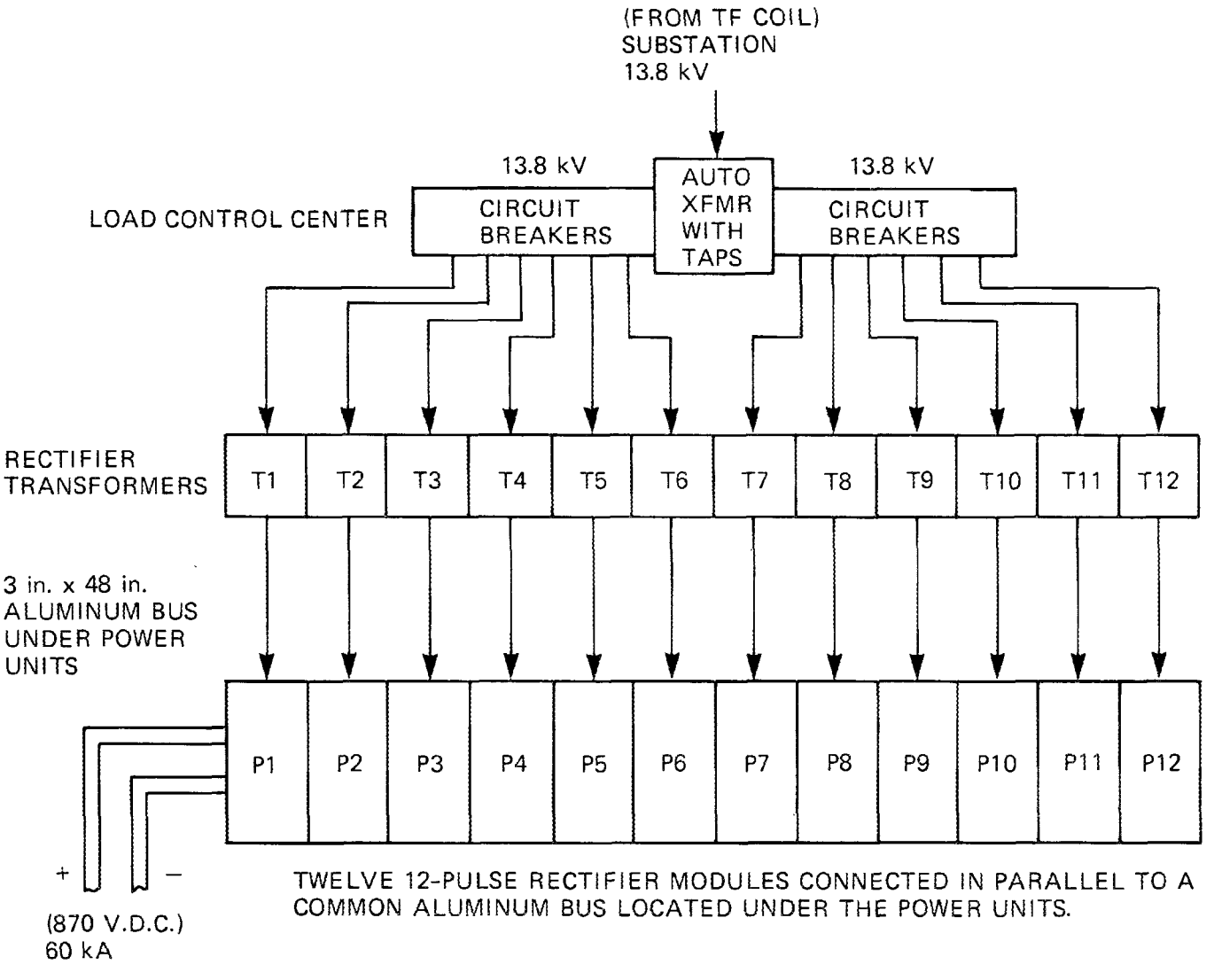

Fig. 93. One of six TF coil power supplies that is connected to common copper buss at the entrance to the reactor building of FED-R.

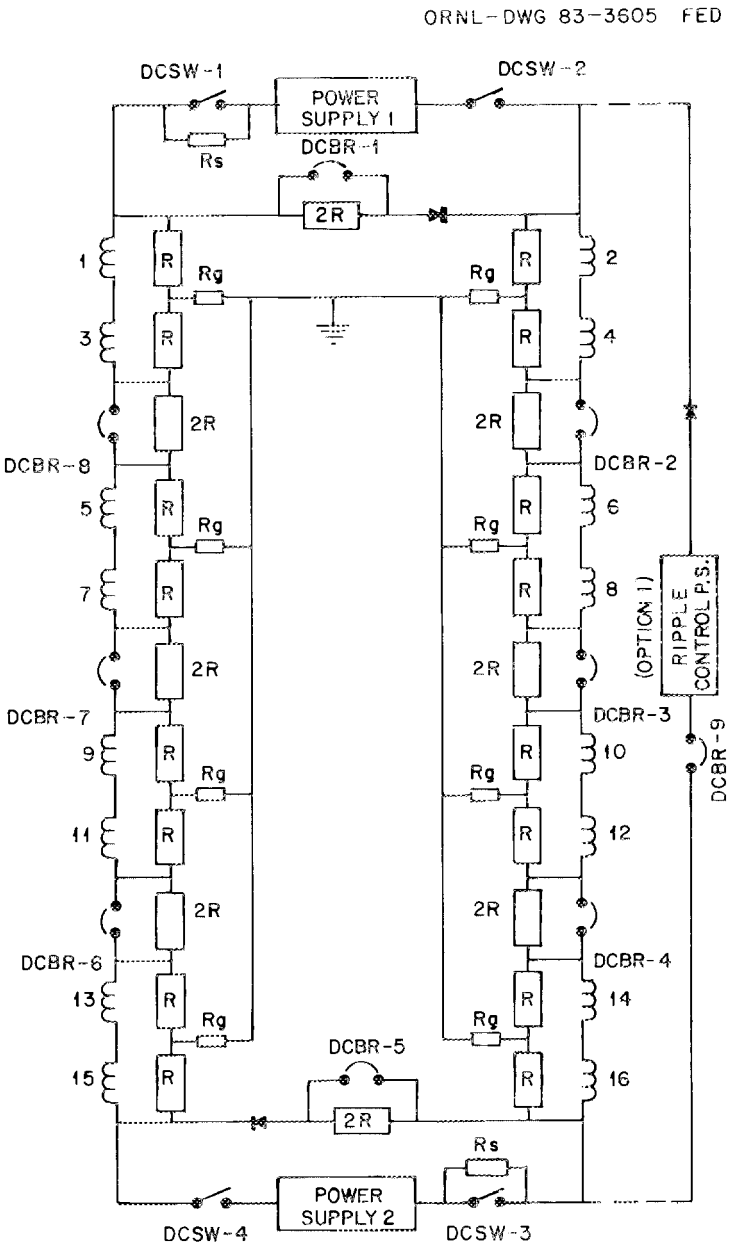

Fig. 94. Power conversion system for hybrid TF coil configuration.

Table 52. Typical SC TF coil I&C measurements

Measured parameter	Number of measurements
A. Voltages	
• across the coil	4 per coil
• coil tap bridge voltages	12 per coil
• coil terminals to ground	8 per coil
• ac power	4 per converter
• low voltage power supplies	4 per power supply
• ac power	4 per power supply
• coil leads	8 per coil
B. Currents	
• to the coil	2 per coil
• from the coil	2 per coil
• coil differential	2 per coil
• ground fault	2 per coil
• to LV power supply (PS)	2 per PS
• from LV power supply	2 per PS
• PS differential	2 per PS
• ac power	2 per PS
C. Impedance change	
• coil shorted turn detectors	4 per coil
• coil resistance detectors	4 per coil
• dump resistor monitor	TBD by design
D. Coolant flow	
• helium flow	4 per coil
• air flow	TBD by design
E. Coolant level	
• helium level	4 per reservoir
F. Coolant pressure	
• helium pressure	4 per coil
G. Dewar vacuum	
• vacuum gage	4 per dewar
• helium leak detector	4 per dewar
H. Temperature	
• outside surface of coil case	8 per coil
• coil leads	16 per coil
• power supplies	TBD by design
I. Limit switches	
• ac switches	TBD by design
• ac circuit breakers	4 per breaker
• dc switches	TBD by design
• dc circuit breakers	4 per breaker

Table 52. (continued)

Measured parameter	Number of measurements
J. Miscellaneous	
• smoke detector	TBD by design
• plasma monitor sensors	TBD by design
• acoustic emission	4 per coil
• magnetic field	10 per coil
• strain	10 per coil

Table 53. Resistive TF coil I&C measurements

Measured parameter	No. of channels
Water flow to TF coil inlet manifold	3
Water flow from TF coil outlet manifold	3
Water temperature at sector outlets	3
Voltage across coil turns and coil current	3

the maximum resistance of the dump resistors and the shortest discharge time constant. The coil energy is assumed to be equally distributed among the four associated dump resistors. Each dump resistor is, in turn, made of many parallel stainless steel coil resistance modules that are air cooled by natural air convection similar to those used in the Large Coil Project (LCP). The resistors are very heavy since the energy of the coil is absorbed by raising the temperature of the stainless steel coil mass approximately 1000°F. For this reason, the material cost varies approximately as the energy to be dissipated. The length of the stainless steel coils are assumed to be proportional to the fabrication cost. The fabrication cost is about two times the materials cost. The cost algorithm is calibrated against the prices paid for LCP and Mirror Fusion Test Facility (MFTF-B) dump resistors.

To limit the voltage between TF coils and ground, small low-power grounding resistors are connected to the junctions between dump resistors as shown in Fig. 87. They are considered to be a part of the dump resistor cost.

To provide adequate coil protection, each SC coil is connected to circuit breakers and dump resistors located outside the reactor building. Two busses are needed to connect each coil to the circuit breakers. Smaller busses can be used to connect the dump resistors to the main bussing, since they do not carry significant current except during a rapid discharge. The dump resistors are assumed to be located in an open field or on top of power conversion electrical buildings (Fig. 88). The area needed for the dump resistors is given by DRAREA in the code.

There is one circuit breaker per coil with a shunt switch to carry the continuous current. A rapid discharge is initiated by opening the shunt switch and then the circuit breaker. Los Alamos National Laboratory (LANL) has developed a dc counterpulse circuit breaker that will carry the continuous current without the shunt switch, but the cost of this circuit breaker is at least as much as the commercial circuit breaker and shunt switch combination. However, the reliability of the counterpulse circuit breaker may be significantly higher.

For redundancy, there are two power supplies connected in series with the SC TF coils; half of the TF coils are located on each side of the power supplies. Three varistors are connected across each power supply to suppress transients that may be introduced through the power line.

Each SC TF coil has instrumentation for coil monitoring and protection as illustrated in Fig. 89 for a two-out-of-three polling system. Only two measurements are shown in the figure, but in practice there are many more, as indicated by a typical measurement list in Table 52. The coil protection system design will vary depending on the type of cooling (pool boiling vs forced flow) and the type of superconductor, as well as the amount of copper stabilizer used in the coil windings. The code arbitrarily assumes 60 channels, CPCHAN, is $1000. A fixed cost of $50,000 is assigned to the coil discharge controllers. These values can be updated later as more cost information becomes available from LCP and MFTF-B.

The two TF coil power supplies are broken down into the modules illustrated in Fig. 90, where there are four modules per power supply. The code assumes that each module provides 5 kA, which is somewhat arbitrary. A fractional number of modules will exist if the coil current is not divisible by five, which is satisfactory for estimating power supply cost even though the design will always use an integral number of modules.

The load center of the TF coil system will probably be shared with other 480-V equipment such as the motor control center of Fig. 91. Therefore, the load center is assumed to consist of only one transformer that provides 480 V to the power supplies and the associated circuit breakers shown in Figs. 90 and 91.

RESISTIVE TF COIL POWER CONVERSION

Resistive TF coils are generally designed for higher currents than superconducting coils to reduce the number of turns that make the fabrication and assembly of coil less expensive. Typical currents range from 100 to 400 kA. Since these coils are in the normal resistive

state, they need only be protected against loss of water coolant. Therefore, they may be connected in series without being connected to dc circuit breakers and dump resistors. The bussing length is then reduced to that needed to connect a single power supply capable of providing the large continuous current and the short interconnecting busses between coils, as shown in Fig. 92. The code manipulates the algorithm for superconducting coils to apply also to resistive coils by setting NSPTFC to 0.0 for resistive coil computation and to 1.0 for superconducting coil computation.

Power supplies for the resistive TF coils contain many medium-voltage, 5-kA power modules connected in parallel, as shown in Fig. 93. The total coil current divided by 5 may give rise to noninteger number of power modules as explained for SC coil power conversion. For cost estimating purposes this can be ignored. The voltage of the power supplies for TF coils needed for charging is not significantly different than the operating voltage (<1 kV) if the charge time is 10 min or longer. The inductive charge voltage can be more than the resistive charge voltage if the charge time is on the order of 10 s. The code prints out the peak inductive power (X power) and the resistive power (R power). The designer may wish to design the power modules so that the peak X power is taken from the energy storage system and the R power directly from the ac power substation.

There are many individual parallel water cooling circuits in a TF coil. If all of these were monitored, a large quantity of instrumentation would be needed. To reduce the instrumentation, only the water flow to the inlet and exit manifolds are measured; unless a significant leak occurs, they should be equal. This measurement would not detect a plugged water passage through a sector of a coil turn. For this purpose, water discharge thermocouples are located at the exit of the passages. They are connected to a local scanner which transmits serial data to the monitoring computer. For redundancy, three scanner channels are assumed to be provided. Other bulk measurements listed in Table 53 include coil

voltage and current whose quotient represents a continuous measure of coil resistance. If the coil (or part of the coil) is undercooled, the coil resistance increases. Voltage drops of each turn of the coil could be made to monitor the resistance of each turn. These would also be an input to the local scanners.

HYBRID TF COIL SYSTEMS

Hybrid TF coil systems have resistive inner TF coils and outer SC TF coils connected to separate circuits. The superconducting coil circuit also requires counter pulse power supplies as shown in Fig. 94 to prevent discharging the SC coils when charging the resistive coils and vice versa. The dump resistor path around the coils also requires blocking rectifiers to prevent excessive current flow through the resistors when the counterpulse power supply voltage is applied. Note that in Fig. 94 the TF coils are paired off to reduce the cost of the coil protection system.

For the hybrid option, it is necessary to make calculations for the counterpulse power supplies, SC coil power conversion system, and RC power conversion system. The code uses two passes to perform these calculations, as described later in this section.

POWER CONVERSION BUILDING FLOOR SPACE AND BUILDING VOLUME

The dump resistor area for SC coils are excluded from the building area and volume (Fig. 88) since they are to be located in open fields or on the roof of a building. For resistance coils, the large rectifier transformers are assumed to be mounted on concrete pads outside the building, and hence they are not included in the building floor space and volume. The volume of the building is determined by multiplying the building floor area by 6 m. This height is typical of many buildings that do not employ overhead cranes. The code assumes that all power conversion equipment can be removed and installed with forklift trucks and jacks. The floor area is computed in three parts allocated to power supplies, to circuit breakers, and to load control centers. The load

control center floor space is significantly more for resistance coils since they use medium-voltage rather than low-voltage circuit breakers and transformers.

CODE INPUT/OUTPUT DATA

The TF power conversion code uses the input data defined in Tables 54 and 55. The user-input data are described in Table 54, which lists the mnemonic, the principal use of the data, the expected range, and the mnemonic description. If the data are related to the TF coils or the program in general, it is assigned to one of three use categories: SC, R, or SC/R, depending on whether the data are used for SC coils, resistive coils, or both. Other data are related to buss, load center, power supply, dump resistor circuit breaker or varistor calculations corresponding to BUS, LC, PS, DR, BKR or VAR in column two of Table 54. Table 55 lists input data from the TF coil system code output data file arranged in the same format as Table 54.

Table 56 lists typical input data for three cases that were run on the TF power conversion code. The first case refers to the all-resistive TF coil design of FED-R; the second case refers to TFCX-S that uses only SC TF coils; and the third case refers to TFCX-H, a hybrid design that has both SC and resistive TF coils. The first eleven entries in Table 56 are listed first since they are the most frequently changed data. Other data in the fourth block of Table 56 are user data that are rarely changed. The output data for these three cases are given in Tables 57 through 60. TFCX-H and TFCX-S each have 16 coils, but they are grouped in pairs as illustrated in Figs. 94 and 95 to reduce the coil protection equipment. Therefore, Table 56 entries for NTFC = 8 and the energies ETFRMJ and ETFSMI are for two coils. Likewise RTFCLS, is the resistance of two of the resistive coils for TFCX-H.

The code mnemonics in most cases provide a clue to the data represented. It refers to the TF coils; PRT refers to print. Hence, TFPRT governs the printing of output data. N usually refers to a nondimensional

Table 54. User-input data description

Code mnemonic	Code use	Expected range	Mnemonic description
TFPRT	SC/R	0.0 1.0	Print summary output only. Print detail and summary data.
NTFC	SC/R	8 16	No. of TF coils in a large tokamak No. of TF coils in a small tokamak
KCOUP	SC/R	0.5 0.8	Low value of magnetic coupling High value of magnetic coupling
TCHRHR	R	0.002 4.0	Ramp time to change or discharge RC TF coils, hours
TCHSHR	SC	1.0 5.0	Ramp time to change or discharge SC TF coils, hours
VTFSKV	SC	1.0 5.0	Maximum TF coil voltage during fast discharge, kV
DJMKA	BUS	0.05 0.15	Design current density for the TF coil air-cooled bussing, kA/cm^2
BUSLIM	BUS	50 300	Buss length per SC TF coil, m
RTFPS	SC/R	1.00 1.20	Multiplying factor for obtaining the power supply rating
ALCPKG	BUS	15 25	Cost of assembled aluminum buss per kilogram, $/kg
CPKW1	LC	60 120	Cost coefficient for TF coil load center, $\$/kW^{0.8}$
CPKW2	PS	200 400	Cost coefficient for TF coil power supplies, $\$/kW^{0.8}$
CPMVA	BKR	0.003 0.006	Cost coefficient for dc circuit breakers, $ million/MVA
CPMJ	DR	3E-5 6E-5	Cost coefficient for dump resistors (DR), $ million/MJ
CPKV	VAR	0.006 0.010	Cost of transient suppression varistors, $\$$ million$/kV^{0.8}$
CFCHAN	SC/R	1000 2000	Cost of one instrument channel, $
FSCP1	SC/R	0.10 0.25	Floor area coefficient for power supplies, $m^2/kV^{0.67}$
FSCP2	SC	0.60 1.00	Floor area coefficient for dc circuit breakers, $m^2/kW^{0.67}$
FSCP3	SC/R	0.30 0.50	Floor area coefficient for load centers, $m^2/kW^{0.67}$

Table 55. Input data from other systems codes

Code mnemonic	Code use	Expected range	Mnemonic description
NTFC	SC/R	8 16	No. of TF coils or TF coil groups
ETFRMJ	R	10 1000	Stored energy per TF coil or TF coil group, MJ
RTFCLS	R	0.0001 0.0025	Resistance of a TF coil or a TF coil group, Ω
ITFRKA	R	50 400	Current through the resistive TF coils, kA
ETFSMI	SC	200 2000	Stored energy per SC TF coil or TF coil group, MJ
ITFSKA	SC	5 30	Current through the SC TF coils, kA

Table 56. Input data for R, SC, and combined R and SC coil power conversion systems

TFPRT=1.Ø, NTFC=12.Ø, KCOUP=Ø.65 ETFRMJ=467.Ø, RTFCLS=Ø.ØØØ175, ITFRKA=36Ø.Ø, TCHRHR=Ø.16667 ETFSMJ=Ø.Ø, ITFSKA=1Ø.Ø, TCHSHR=4.Ø, VTFSKV=1.ØØ DJMKA=Ø.1Ø, BUSL1M=2ØØ.Ø, RTFPS=1.Ø5, ALCPKG=18.Ø CPKW1=9Ø.Ø, CPKW2=4ØØ.Ø, CPMVA=Ø.ØØ4Ø, CPMJ=4Ø.ØE-6, CPKV=Ø.ØØ75, CPCHAN=1ØØØ. FSPC1=Ø.13, FSPC2=Ø.8Ø, FSPC3=Ø.4Ø	TFPRT=1.Ø, NTFC=8.Ø, KCOUP=Ø.65 ETFRMJ=Ø.Ø, RTFCLS=Ø.ØØØ256, ITFRKA=15Ø.Ø, TCHRHR=Ø.ØØ556 ETFSMJ=8Ø8.Ø, ITFSKA=28.Ø, TCHSHR=4.Ø, VTFSKV=1.ØØ DJMKA=Ø.1Ø, BUSL1M=2ØØ.Ø, RTFPS=1.Ø5, ALCPKG=18.Ø CPKW1=9Ø.Ø, CPKW2=4ØØ.Ø, CPMVA=Ø.ØØ4Ø, CPMJ=4Ø.ØE-6, CPKV=Ø.ØØ75, CPCHAN=1ØØØ. FSPC1=Ø.13, FSPC2=Ø.8Ø, FSPC3=Ø.4Ø	TFPRT=1.Ø, NTFC=8.Ø, KCOUP=Ø.65 ETFRMJ=18.75, RTFCLS=Ø.ØØØ256, ITFRKA=15Ø.Ø, TCHRHR=Ø.ØØ556 ETFSMJ=42Ø.Ø, ITFSKA=1Ø.Ø, TCHSHR=4.Ø, VTFSKV=1.ØØ DJMKA=Ø.1Ø, BUSL1M=2ØØ.Ø, RTFPS=1.Ø5, ALCPKG=18.Ø CPKW1=9Ø.Ø, CPKW2=4ØØ.Ø, CPMVA=Ø.ØØ4Ø, CPMJ=4Ø.ØE-6, CPKV=Ø.ØØ75, CPCHAN=1ØØØ. FSPC1=Ø.13, FSPC2=Ø.8Ø, FSPC3=Ø.4Ø
Output data in Table 57	Output data in Table 58	Output data in Tables 59 and 60

Table 57. TF R coil power conversion output

```
 2
 3   1                    RESISTANCE COIL P.S. DATA
 4
 5
 6          ETTFMJ,STORED ENERGY OF TF COILS, MJ          5604.
 7          ITFKA, TF COIL CURRENT,KA                     360.0
 8          NTFC, NUMBER OF TFCOILS                       12.00
 9          VTFSKV, MAX. VOLTAGE ACROSS COIL SEC,KV       1.000
10          TCHGHR, TF COIL CHARGE TIME, HOURS           0.1666
11
12          TOTAL INDUCTANCE OF TF COILS, HENRIES        8.6481E-02
13          TOTAL RESISTANCE OF TF COILS, OHMS           2.1000E-03
14          INDUCTANCE PER COIL SECTION, HENRIES         7.2058E-03
15          TOTAL REQUIRED CHARGING VOLTAGE, VOLTS        814.2
16          NUMBER OF DC CIRCUIT BREAKERS                0.0000
17          COST OF DC CIRCUIT BREAKERS, $MILLION        0.0000
18
19          NUMBER OF DUMP RESISTORS                     0.0000
20          RESISTANCE OF A DUMP RESISTOR,OHMS           0.0000
21          PEAK POWER TO A DUMP RESISTOR, MW            0.0000
22          ENERGY TO A DUMP RESISTOR, MJ                0.0000
23          L/R TIME CONSTANT OF TF COILS,SECONDS         41.16
24          COST OF DUMP RESISTORS, $MILLION             0.0000
25
26          NUMBER OF POWER MODULES                       72.00
27          POWER MODULE VOLTAGE, VOLTS                   854.9
28          POWER MODULE CURRENT, KA                      5.250
29          POWER MODULE RATED OUTPUT, KW                 4488.
30          AC POWER FOR CHARGING TF COILS, KW           3.2315E+05
31          RPOWER,TF COIL RESISTIVE POWER, MW            274.4
32          XPOWER,TF COIL INDUCTIVE POWER, MW            18.68
33          COST OF TF SUPPLIES, $MILLION                 15.68
34
35          AL BUS DESIGN CURRENT DENSITY, KA/SQ.CM      0.1000
36          ALUMINUM BUS SECTION AREA, SQ. CM             3500.
37          AVERAGE LENGTH OF BUS RUN, METERS             200.0
38          TOTAL LENGTH OF TF BUSSING, METERS            240.0
39          TOTAL RESISTANCE OF TF BUSSING, OHMS         1.7467E-05
40          VOLTAGE DROP ACROSS TF BUSSING, VOLTS         6.288
41          COST OF TF BUSSING, $MILLION                  4.199
42
43          COST OF TF LOAD CONTROL CTR. $MILLION         2.300
44          COST OF CONTROL & INSTR. $MILLION            0.1940
45          CTFPCM, TOTAL COST OF TF POWER CONV. $M       22.37
46
47          DRAREA, DUMP RESISTOR AREA ON ROOF,SQ.M      0.0000
48          TFCFSP, TF POWER CONV FLOOR SPACE, SQ.M       2882.
49          TFCBV,  TF POWER CONV BLDG VOLUME, CU.M      0.1729E+05
50
51
52
53                TF COIL POWER CONV. SUMMARY
54
55
56          TOTAL TF COIL POWER CONV. COST,$MILLION       22.37
57          TOTAL TF COIL MGF ENERGY DEMAND,MJ            7005.
58          TOTAL TF COIL MGF PEAK XPOWER DEMAND,MW       23.35
59          TOTAL TF COIL AC RPOWER FLTP DEMAND, MW       343.0
60          TOTAL TF COIL PWR CONV. FLOOR SPACE,SQ.M      2882.
61          TOTAL TF COIL PWR CONV.BLDG. VOLUME,CU.M     0.1729E+05
```

Table 58. TF SC coil power conversion output

```
 2
 3   1                    SUPERCONDUCTING COIL P.S. DATA
 4
 5
 6          ETTFMJ,STORED ENERGY OF TF COILS, MJ          6464.
 7          ITFKA, TF COIL CURRENT,KA                     28.00
 8          NTFC, NUMBER OF TFCOILS                       8.000
 9          VTFSKV, MAX. VOLTAGE ACROSS COIL SEC,KV       1.000
10          TCHGHR, TF COIL CHARGE TIME, HOURS            4.000
11
12          TOTAL INDUCTANCE OF TF COILS, HENRIES         16.49
13          TOTAL RESISTANCE OF TF COILS, OHMS           0.0000
14          INDUCTANCE PER COIL SECTION, HENRIES          2.061
15          TOTAL REQUIRED CHARGING VOLTAGE, VOLTS        73.98
16          NUMBER OF DC CIRCUIT BREAKERS                 8.000
17          COST OF DC CIRCUIT BREAKERS, $MILLION        0.4601
18
19          NUMBER OF DUMP RESISTORS                      32.00
20          RESISTANCE OF A DUMP RESISTOR,OHMS           3.5714E-02
21          PEAK POWER TO A DUMP RESISTOR, MW             7.000
22          ENERGY TO A DUMP RESISTOR, MJ                 202.0
23          L/R TIME CONSTANT OF TF COILS,SECONDS         57.71
24          COST OF DUMP RESISTORS, $MILLION             0.4316
25
26          NUMBER OF POWER MODULES                       11.20
27          POWER MODULE VOLTAGE, VOLTS                   36.84
28          POWER MODULE CURRENT, KA                      5.250
29          POWER MODULE RATED OUTPUT, KW                 203.9
30          AC POWER FOR CHARGING TF COILS, KW            2284.
31          RPOWER,TF COIL RESISTIVE POWER, MW            1.174
32          XPOWER,TF COIL INDUCTIVE POWER, MW           0.8977
33          COST OF TF SUPPLIES, $MILLION                0.3096
34
35          AL BUS DESIGN CURRENT DENSITY, KA/SQ.CM      0.1000
36          ALUMINUM BUS SECTION AREA, SQ. CM             280.0
37          AVERAGE LENGTH OF BUS RUN, METERS             200.0
38          TOTAL LENGTH OF TF BUSSING, METERS            1600.
39          TOTAL RESISTANCE OF TF BUSSING, OHMS         1.4371E-03
40          VOLTAGE DROP ACROSS TF BUSSING, VOLTS         41.92
41          COST OF TF BUSSING, $MILLION                  2.177
42
43          COST OF TF LOAD CONTROL CTR. $MILLION        4.3770E-02
44          COST OF CONTROL & INSTR. $MILLION            0.5300
45          CTFPCM, TOTAL COST OF TF POWER CONV. $M       3.997
46
47          DRAREA, DUMP RESISTOR AREA ON ROOF,SQ.M       553.6
48          TFCFSP, TF POWER CONV FLOOR SPACE, SQ.M       148.4
49          TFCBV,  TF POWER CONV BLDG VOLUME, CU.M       890.4
50
51
52
53                TF COIL POWER CONV. SUMMARY
54
55
56          TOTAL TF COIL POWER CONV. COST,$MILLION       3.997
57          TOTAL TF COIL MGF ENERGY DEMAND,MJ           0.0000
58          TOTAL TF COIL MGF PEAK XPOWER DEMAND,MW       1.122
59          TOTAL TF COIL AC RPOWER FLTP DEMAND, MW       1.467
60          TOTAL TF COIL PWR CONV. FLOOR SPACE,SQ.M      148.4
61          TOTAL TF COIL PWR CONV.BLDG. VOLUME,CU.M      890.4
```

Table 59. First part of SC/R power conversion output

```
                    COUNTER PULSE P.S. DATA


          LRC, TOTAL INDUCTANCE OF R COILS,H          1.3333E-02
          LSC, TOTAL INDUCTANCE OF SC COILS,H          67.20
          MUTL,TOTAL MUT. INDUCTANCE ,H               0.6152
          TFCPKV,TOTAL VOLTAGE OF CP PS,KV             4.611
          ITFSKA,TOTAL CURRENT OF CP PS,KA             10.00
          TFCPMW,TOTAL POWER OF CP PS,MW               46.41
          CCPPSM,COST OF CP PS,$MILLION               0.9682
          TFCPSP,COUNTER PULSE PS FLOOR, SQ.M          285.9


1                   SUPERCONDUCTING COIL P.S. DATA

          ETTFMJ,STORED ENERGY OF TF COILS, MJ         3360.
          ITFKA, TF COIL CURRENT,KA                    10.00
          NTFC, NUMBER OF TFCOILS                      8.000
          VTFSKV, MAX. VOLTAGE ACROSS COIL SEC,KV      1.000
          TCHGHR, TF COIL CHARGE TIME, HOURS           4.000

          TOTAL INDUCTANCE OF TF COILS, HENRIES        67.20
          TOTAL RESISTANCE OF TF COILS, OHMS          0.3000
          INDUCTANCE PER COIL SECTION, HENRIES         8.400
          TOTAL REQUIRED CHARGING VOLTAGE, VOLTS       88.59
          NUMBER OF DC CIRCUIT BREAKERS                8.000
          COST OF DC CIRCUIT BREAKERS, $MILLION       0.2019

          NUMBER OF DUMP RESISTORS                     32.00
          RESISTANCE OF A DUMP RESISTOR,OHMS          0.1000
          PEAK POWER TO A DUMP RESISTOR, MW            2.500
          ENERGY TO A DUMP RESISTOR, MJ                135.0
          L/R TIME CONSTANT OF TF COILS,SECONDS        84.00
          COST OF DUMP RESISTORS, $MILLION            0.3427

          NUMBER OF POWER MODULES                      4.000
          POWER MODULE VOLTAGE, VOLTS                  46.51
          POWER MODULE CURRENT, KA                     5.250
          POWER MODULE RATED OUTPUT, KW                244.2
          AC POWER FOR CHARGING TF COILS, KW           976.7
          RPOWER,TF COIL RESISTIVE POWER, MW          0.4192
          XPOWER,TF COIL INDUCTIVE POWER, MW          0.4666
          COST OF TF SUPPLIES, $MILLION               0.1415

          AL BUS DESIGN CURRENT DENSITY, KA/SQ.CM     0.1000
          ALUMINUM BUS SECTION AREA, SQ. CM            100.0
          AVERAGE LENGTH OF BUS RUN, METERS            200.0
          TOTAL LENGTH OF TF BUSSING, METERS           1000.
          TOTAL RESISTANCE OF TF BUSSING, OHMS        4.1920E-03
          VOLTAGE DROP ACROSS TF BUSSING, VOLTS        41.92
          COST OF TF BUSSING, $MILLION                0.7776

          COST OF TF LOAD CONTROL CTR. $MILLION       2.2184E-02
          COST OF CONTROL & INSTR. $MILLION           0.5300
          CTFPCM, TOTAL COST OF TF POWER CONV. $M      2.061

          DRAREA, DUMP RESISTOR AREA ON ROOF,SQ.M      358.9
          TFCFSP, TF POWER CONV FLOOR SPACE, SQ.M      72.09
          TFCBV,  TF POWER CONV BLDG VOLUME, CU.M      432.5
```

Table 60. Second part of SC/R power conversion output

```
 68
 69   1                        RESISTANCE COIL P.S. DATA
 70
 71
 72          ETTFMJ,STORED ENERGY OF TF COILS, MJ          150.0
 73          ITFKA, TF COIL CURRENT,KA                     150.0
 74          NTFC, NUMBER OF TFCOILS                       8.000
 75          VTFSKV, MAX. VOLTAGE ACROSS COIL SEC,KV       1.000
 76          TCHGHR, TF COIL CHARGE TIME, HOURS           5.5600E-03
 77
 78          TOTAL INDUCTANCE OF TF COILS, HENRIES        1.3333E-02
 79          TOTAL RESISTANCE OF TF COILS, OHMS           2.0480E-03
 80          INDUCTANCE PER COIL SECTION, HENRIES         1.6667E-03
 81          TOTAL REQUIRED CHARGING VOLTAGE, VOLTS        413.4
 82          NUMBER OF DC CIRCUIT BREAKERS                0.0000
 83          COST OF DC CIRCUIT BREAKERS, $MILLION        0.0000
 84
 85          NUMBER OF DUMP RESISTORS                     0.0000
 86          RESISTANCE OF A DUMP RESISTOR,OHMS           0.0000
 87          PEAK POWER TO A DUMP RESISTOR, MW            0.0000
 88          ENERGY TO A DUMP RESISTOR, MJ                0.0000
 89          L/R TIME CONSTANT OF TF COILS,SECONDS         6.510
 90          COST OF DUMP RESISTORS, $MILLION             0.0000
 91
 92          NUMBER OF POWER MODULES                       30.00
 93          POWER MODULE VOLTAGE, VOLTS                   434.1
 94          POWER MODULE CURRENT, KA                      5.250
 95          POWER MODULE RATED OUTPUT, KW                 2279.
 96          AC POWER FOR CHARGING TF COILS, KW           0.6837E+05
 97          RPOWER,TF COIL RESISTIVE POWER, MW            47.02
 98          XPOWER,TF COIL INDUCTIVE POWER, MW            14.99
 99          COST OF TF SUPPLIES, $MILLION                 4.146
100
101          AL BUS DESIGN CURRENT DENSITY, KA/SQ.CM      0.1000
102          ALUMINUM BUS SECTION AREA, SQ. CM             1500.
103          AVERAGE LENGTH OF BUS RUN, METERS             200.0
104          TOTAL LENGTH OF TF BUSSING, METERS            240.0
105          TOTAL RESISTANCE OF TF BUSSING, OHMS         4.1920E-05
106          VOLTAGE DROP ACROSS TF BUSSING, VOLTS         6.288
107          COST OF TF BUSSING, $MILLION                  1.750
108
109          COST OF TF LOAD CONTROL CTR. $MILLION        0.6639
110          COST OF CONTROL & INSTR. $MILLION            0.1460
111          CTFPCM, TOTAL COST OF TF POWER CONV. $M       6.706
112
113          DRAREA, DUMP RESISTOR AREA ON ROOF,SQ.M      0.0000
114          TFCFSP, TF POWER CONV FLOOR SPACE, SQ.M       793.7
115          TFCBV,  TF POWER CONV BLDG VOLUME, CU.M       4762.
116
117
118
119                 TF COIL POWER CONV. SUMMARY
120
121
122          TOTAL TF COIL POWER CONV. COST,$MILLION       9.735
123          TOTAL TF COIL MGF ENERGY DEMAND,MJ            1399.
124          TOTAL TF COIL MGF PEAK XPOWER DEMAND,MW       79.84
125          TOTAL TF COIL AC RPOWER FLTP DEMAND, MW       59.30
126          TOTAL TF COIL PWR CONV. FLOOR SPACE,SQ.M      1132.
127          TOTAL TF COIL PWR CONV.BLDG. VOLUME,CU.M      6790.
128
```

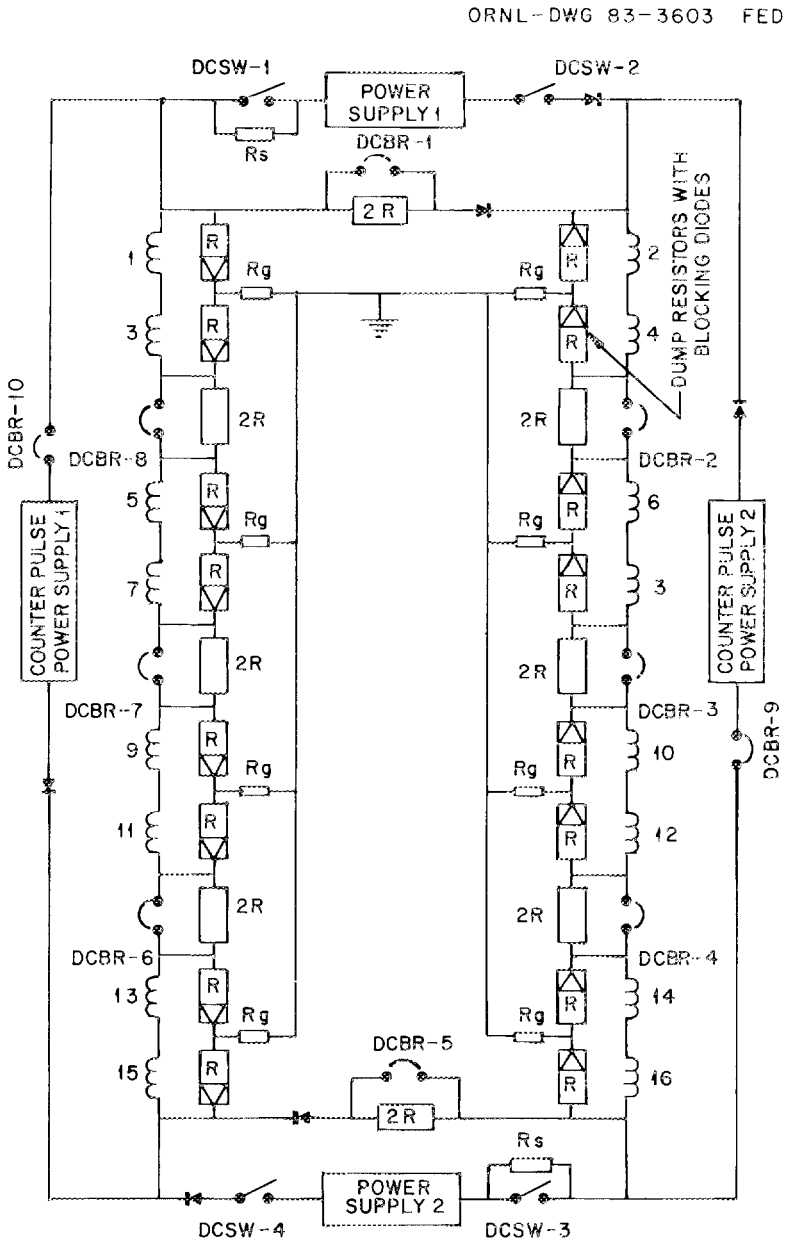

Fig. 95. Power conversion system for TF coil configuration with coils grouped in pairs.

number, E for energy, R for resistance or resistive, and X for inductive. The last two alphanumeric characters often define the unit measure; i.e., MJ for megajoules, kA for kiloamps, kV for kilovolts, etc. For example, ETFRMJ refers to the energy of a TF coil that is resistive with units of energy given in megajoules. Likewise, ETFSMJ refers to the same data for a superconducting coil. NTFC refers to the number of TF coils.

Setting the first mnemonic in Table 54, TFPRT, equal to 0.0 tells the code to print out only the summary output data, while setting it to 1.0 tells the code to print out both the detail and summary output data as shown in Tables 57 through 60. The code execution depends on the energy per coil data, whose mnemonics are ETFMJ for resistive coils and ETFSMJ for superconducting coils. If only resistive coils are used, set ETFRMJ to the design value, but set ETFSMJ = 0.0. The code then ignores the data for SC coils and computes the output data based on the resistive coil input data. Likewise, if ETFRMJ is set equal to 0.0 and ETFSMJ to the design value, the code ignores the resistive coil data and computes the output data based on the superconducting coil input data.

If both ETFRMJ and ETFSMJ are set to design values, the code assumes a hybrid TF coil system consisting of equal number of resistive and superconducting TF coils given in NTFC. If the superconducting coils are operated in steady state while the resistive coils are pulsed, it is necessary to provide one or more counter-pulse power supplies connected to the SC coils so that they do not discharge appreciably when the resistive TF coils are charged or discharged. The counter-pulse power supply output data are given separately at the top of the output data shown in Table 59. The coefficient of coupling, KCOUP, between the superconducting coils is needed to compute the required counter-pulse voltage. For loosely coupled coils, KCOUP may be 0.6, whereas for more tightly coupled coils, KCOUP may be 0.8. The value of KCOUP may be calculated from the inductance matrix of the superconducting TF coils connected in series and the resistive TF coils connected in series. A single coil pair may also be used as a good approximation, that is:

KCOUP = MUTL/(LRC * LSC) **0.5 ,

where M is the mutual inductance between the coils and LRC and LSC are the self-inductances of the resistive coil and superconducting coil, respectively.

PRINCIPAL EQUATIONS

The TF power conversion code makes one pass using the equations below when the TF coils are all-SC or all-resistive. If the TF coils are all-superconducting, the index operator, NSPTFC, equals 1.0. If the TF coils are all-resistive, the index operator is set equal to 0.0 during the initializing phase of the operation. The code makes two passes using the equations below for hybrid TF coil systems. The initialization for the first pass uses the SC coil input data and initializing for the second pass decrements NSPTFC so that it is zero and uses the resistive coil input data. The hybrid coil case prints two output tables shown in Tables 59 and 60. The first table is for the SC coil power conversion systems and the second table is for the resistive coil power conversion system and the summary. Key output data are combined to provide the summary data shown at the bottom of Table 60. The counterpulse power supply and the inductive part of the resistive coil power conversion system may be connected to the MGF energy storage system. This energy is given by the variable, ETFMGF, which is included in the summary table. The summary table also includes the pulsed resistive power that may be taken directly from the ac power substation. The following equations are used in code TFCON.

Total inductance of the resistive TF coils, LRC, H:

$$LRC = 2\ (ETTFR*10^6)/(ITFRKA*10^3)^2 \quad , \quad H$$

ETTFR = total resistive TF coil energy, MJ ,

ITFRKA = resistive TF coil design current, kA .

Total inductance of the superconducting TF coils, LSC, H:

$$LSC = 2\ (ETTFSC*10^6)/(ITFSKA*10^3)^2, \ H \quad ,$$

ETTFSC = total SC TF coil energy, MJ ,

ITFSKA = SC TF coil design current, kA.

Total mutual inductance of RC and SC TF coils, MUTL, H:

$$MUTL = KCOUP \sqrt{(LRC)(LSC)} \quad ,$$

KCOUP = mutual coupling between RC and SC TF coils from the user's table = input item $\sim$ 0.65 (typical).

Required counter-pulse power supply voltage, TFCPKV, kV:

$$TFCPKV = MUTL\ (ITFRKA)/(3600\ TCHRHR) \quad ,$$

TCHRHR = charge time of resistive TF coils, h.

Required counter-pulse power, TFCPKW, kW:

$$TFCPKW = 1000\ (RTFPS)(TFCPKV)(ITRSKA) \quad ,$$

RTFPS = rating factor for power supply from user's table = 1.05.

Cost of counter-pulse power supplies, CCPPSM, $ million:

$$CCPPSM = 20\ (TFCPKW) \quad .$$

Counter-pulse power supply floor space, TFCPSP, m^2:

$$TFCPSP = FSCP1\ (TFCPKW)^{0.67} + FSCP3\ (TFCPKW/13.8)^{0.67},$$

FSCP1 and FSCP3 are floor space coefficients from the user's table = 0.13 and 0.40, respectively.

Initialize equations for cumulative reactive power, XPWRMW, floor space, TFTSP, and cost, CTFPCT:

$$XPWRMW = TFCPMW/0.8 \quad ,$$

$$TFTSP = TFCPSP \quad ,$$

$$CTFPCT = CCPPSM \quad .$$

Initialize equations for SC TF coil calculation pass:

50 energy, ETTFMJ = ETTFSC ,

Inductance, LTFTH = LSC ,

Current, ITFPKA = ITFSKA ,

Charge time, TCHGHR = TCHSHR .

Initialize equations for RC TF coil calculation pass:

185 energy, ETTFMJ = ETTFR ,

Inductance, LTFTH = LRC ,

Current, ITFPKA = ITFRKA ,

Index count, NSPTFC = NSPTFC - 1.0 ,

Change time, TCHGHR = TCHRHR .

Number of circuit breakers, NTFBKR, and the inductance per coil group, LPTFCS:

60 NTFBKR = NTFC * NSPTFC ,

LPTFCS = LTFTH/NTFC ,

NTFC = the number of coil groups.

TF coil aluminum buss resistance and voltage drop calculations:

Buss area, ALBUSA = ITFPKA (DJMKA), cm^2 ,

Buss length, TFBUSL = [1.2(1.0 - NSPTFC) + NTFBKR](BUSLIM), m ,

Resistance, RTFBUS = 2.62E - 4. (TFBUSL)/ALBUSA, Ω ,

Voltage drop, VTFBUS = 1000 (ITFPKA)(RTFBUS), V .

DJMKA and BUSLIM are the current density of bussing and buss length per coil group taken from the user table = 0.10 KA/SQ cm and 200 m, respectively.

NSPTFC = 1.0 for SC TF coils = 0.0 for RC TF coils.

Resistance of RC TF coils, RCOILS, Ω:

RCOILS = NTFC (RTFCLS)(1.0 + NSPTFC) ,

RTFCLS is the resistance of a TF coil group.

Charge impedance expression and the required coil charging voltage:

ZTOTAL = RTFBUS + RCOILS + LTFTH/(3600 * TCHGHR) ,

TFCV = 1000 ITFPKA (ZTOTAL) .

Power supply calculations:

Number of modules, NTFPM (NSPTFC)(ITFPKA) + ITFPKA)/5.0 ,

Voltage of module, TFPMV = RTFPS(TFCV)/(1.0 + NSPTFC) ,

Current of module, TFPMKA = RTFPS(ITFPKA)/[NTFPM/(1.0 + NSPTFC)] ,

Power of module, TFPMKW = TFPMV(TFPMKA) ,

Total peak power, TFCKW = TFPMKW(NTFPM) ,

RTFPS is a power supply rating factor from the user table = 1.05,

NSPTFC = 1.0 for SC TF coils and 0.0 for RC TF coils.

Dump resistor (DR) calculations:

Resistance of a DR, R1DUMP = NSPTFC(VTFSKV)/ITFKA, Ω ,

Time constant, TTFSEC = LPTFCS/[R1DUMP(NSPTFC) + RTFCLS(1.0 - NSPTFC)] ,

Number of DR, NDUMPR = 4 (NTFBKR) ,

Peak power to a DR, R1PPMW = NSPTFC(R1DUMP)$(ITFPKA/2)^2$, MW ,

Energy to a DR, R1EMJ = NSPTFC(ETTFMJ)/(NDUMPR + 0.0001), MJ ,

DR area, DRAREA = 0.5 (NDUMPR)$(L + R1EMJ)^{0.67}$.

VTFSKV is the maximum voltage across a coil or coil group during a rapid discharge from the user table, named TFCNIN, VTFSKV = 2 kV. All other mnemonics are defined above.

Total power to TF coils:

Resistive power, RPOWER = [NTFC(RTFCLS)(1 - NSPTFC) + RIFBUS] * $(ITFPKA)^2$, MW ,

Reactive power, XPOWER = [LTFTH/(3600 TCHGHR)]$(ITFPKA)^2$, MW.

Number of varistors:

NVAR = 6 NSPTFC.

TF power conversion building volume and floor space:

Power supply space, PART1 = FSPC1(NTFPM)$(TFPMKW)^{0.67}$, m^2 ,

DC CKT BKR space, PART2 = FSPC2(NTFBKR)$(VTFSKV*ITFPKA)^{0.67}$,

Load center space, PART3 = FSPC3$\{TFCKW/[2.4NSPTFC + 13.8(1 - NSPTFC)]\}^{0.67}$,

Building floor space, TFCFSP = PART1 + PART2 + PART3, m^2 ,

Total floor space, TFTSP = TFTSP + TFCFSP, m^2
(for counter-pulse P.S., SC TF coil power conversion, and resistive coil power conversion).

FSPC1, FSPC2, and FSPC3 are floor area coefficients from the user table, named TFCNI. Numerical values of these coefficients are 0.13, 0.80, 0.40, respectively.

TF coil power conversion cost, $ million:

AL buss cost, CTFBSM = 0.27(ALCPKG)(ALBUSA)(TFBUSL)/1.0×10^6 ,

Load center cost, CTFLCM = CPKW1$(TFCKW)^{0.8}$/1.0×10^6 ,

DC CKT BKR cost, CTFBKM = NTFBKR(CPMVA)$(ITFKA*VTFSKV)^{0.8}$,

Dump resistor cost, CTFDRM = NDUMPR(CPMJ)[R1EMJ + $50\sqrt{0.1 + R1EMJ(R1DUMP)}$,

Varistor cost, CTFVRM = NVAR (CPKV)$(VTFSKV)^{0.8}$,

Coil protect cost, CTFPEM = CTFBKM + CTFDRM + CTFVRM ,

Instrument cost, CTFCIM = 0.05 + NTFC(12 + 48 NSPTFC)CPCHAN/1.0 × 10^6 ,

Cost of a TF power conversion system, CTFPCM = CTFBSM + CTFLCM + CTFPSM + CTFPEM + CTFCIM ,

Cost of all TF power conversion systems, CTFPCT = CTFPCT + CTFPCM.

ALCPKG is the cost of assembled buss per kilogram ;

CPKW1 is the load center cost coefficient, $\$/kW^{0.8}$;

CPKW2 is the power supply cost coefficient, $\$/kW^{0.8}$;

CPMVA is the circuit breaker cost coefficient, $\$/MW^{0.8}$

CPMJ is the dump resistor cost coeffieicnt, $/MJ ;

CPKV is the varistor cost coefficient, $\$/kV^{0.8}$; and

CPCHAN is the cost of one instrument channel, $.

The cost coefficients are data from the user's table named TFCNIN .

CODE FLOW DIAGRAM

Figure 96 is the TFCON code flow diagram. Input data are read from the user's data file and the TF coil system output data file. The preliminary data calculations provide initialization data and logic data for one or two passes through the main program. The hybrid decision block determines whether one or two passes are needed.

If the coils are either all-SC or all-resistive, the flow path to the left of Fig. 96 applies. The next decision branch determines whether to use the superconducting coil path or resistive coil path. If the coils are all resistive, the path goes to the lower left of the figure, where NSPTFC index is decremented from 1.0 to 0.0 and the code is initialized for the resistive coil pass. After the power conversion calculations are performed by the middle left two blocks of the figure, the print option test is made. If TFPRT > 0, the detail output data are printed out, and NSPTFC is decremented again to indicate the calculations are complete. The final output summary data are always printed before exiting from the code.

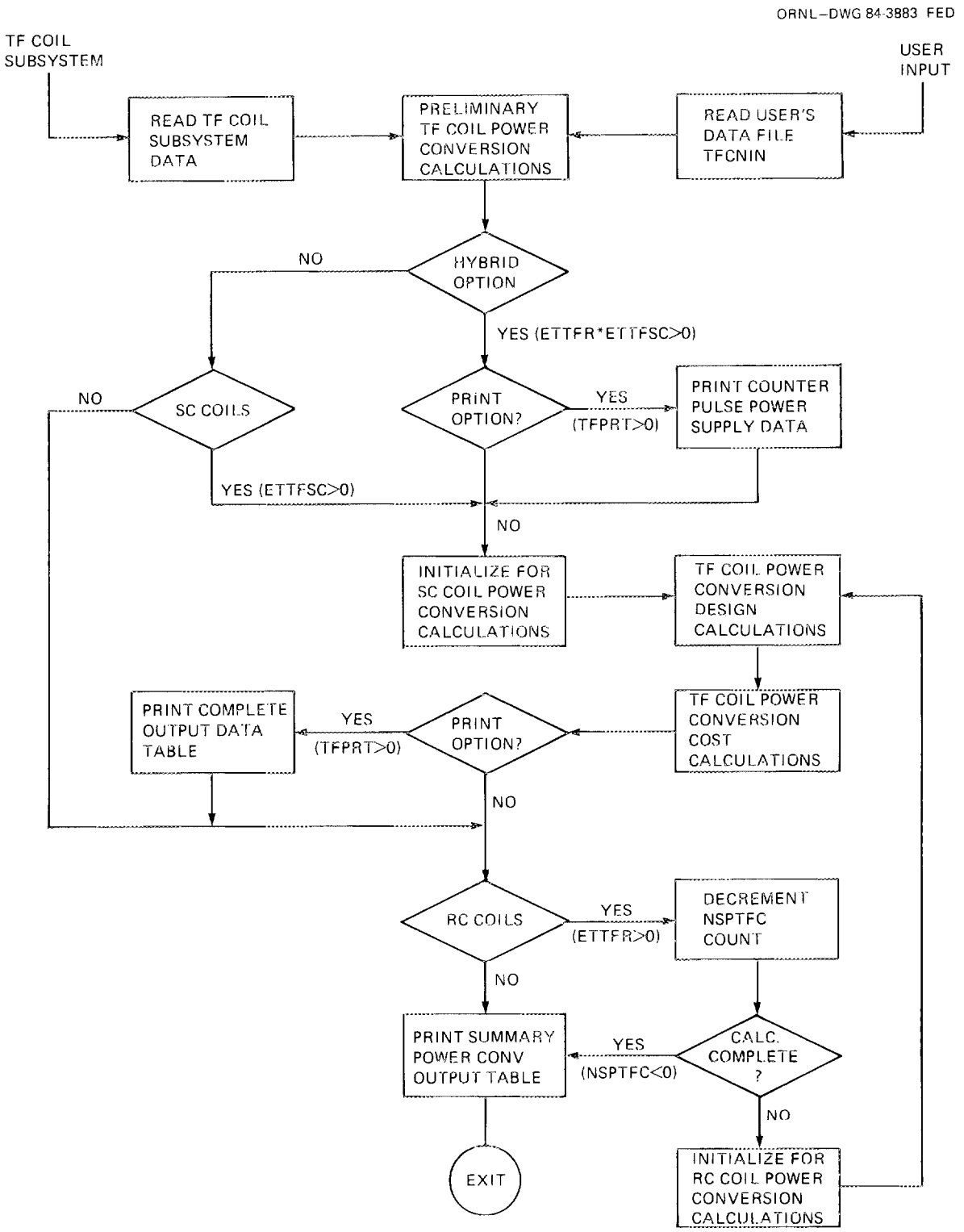

Fig. 96. TF power conversion system code flow diagram.

If the test for SC coils in Fig. 96 shows ETTFSC > 0, the code initialized for the SC coil pass then performs the calculations and printout described for the resistive coil pass. Note that the test for RC coils will then prevent branching to the left; the path is then directly to the summary printout before exiting from the code.

If the test for the hybrid case shows both types of coils exist, the counter-pulse power supply calculations are performed, and the pertinent data are printed out. Then, the SC coil pass calculations are made, followed by the RC coil test which will branch to the right so that the code is reinitialized for the resistive coil calculations made on the second pass through the main program before making the final exit.

15. FACILITIES MODULE

FACIL (FACILITIES MODULE)

The facilities module, FACIL, determines the size and cost of all currently identified facilities and buildings required by the FED, except for reactor building and hot-cell facility shape and size, which are calculated in REACEL. Some building sizes can be based on calculations in other modules. However, for most of the facilities the sizes are currently provided directly by input. Those buildings for which information from other modules is used are indicated in the printed output from the FACIL module.

ASSUMPTIONS AND CONSTRAINTS

For all of the buildings and facilities, the dimensions can be taken directly from the input. The building volume is determined and multiplied by the input unit cost to get the building. This simple calculational model makes the fundamental assumption that building costs can be expressed in each per unit volume. The flexibility of this approach allows the user to make any assumption about the building and directly input the volumes and costs.

A few building sizes can be determined by other modules. The assumptions for these calculations are described in the descriptions for the other modules.

INPUT FOR FACIL

The variables used by FACIL are shown in Table 61. Input facility parameters include size and cost information on 19 buildings and structures and cost information for site improvements. Reactor building and hot-cell information may be transferred from the REACEL module.

The building information is stored in 19 one-dimensional (1-D) arrays of seven elements each. The general form of the building information follows.

Table 61. Facility building input parameters

Symbol	Description	Units	Source[a]
Array names correspond to unique building information.			
REB	Reactor building	See text	U/C
HCF	Hot-cell facility		U/C
INSTR	Water intake structure		U
WATR	Water treatment building		U
RECIR	Recirculating water structures		U
CUTFE	Copper EF and TF coils electrical equipment building		U
OHPFE	Ohmic heating and PF coils electrical equipment building		U
BULKH	Bulk heating (NBI or rf) electrical equipment building		U
MGF	Motor-Generator-Flywheel building		U
CREF	Cryogenic refrigeration equipment building		U
TRIT	Tritium processing building		U
VENT	Ventilation equipment building		U
RADWA	Radiation waste treatment building		U
CONT	Control room building		U
GEN	Diesel-generator building		U
ADMIN	Administration building		U
SHOP	Shop and mockup building		U
TUNLA	Tunnel between control room and reactor building		U
STACK	Ventilation stack		U

Table 61 (continued)

Symbol	Description	Units	Source[a]
Other input parameters			
SIMPR(1)	Site improvement costs		$M
TFCFSP	TF coil electrical equipment building floor space	m^2	C
TFCBV	TF coil electrical equipment building volume	m^3	C
PFCBV	Ohmic heating and PF coils electrical equipment building volume	m^3	C
ESPSPM	Motor-generator-flywheel building floor area	m^2	C
PFCFSP	Ohmic heating and PF coils electrical equipment building floor area	m^2	C

[a]Source: U = input is supplied by user;
C = input flows in from other modules of the code.

Array Word	Definition	Units
1	Building length (or radius)	m
2	Building width	m
3	Building height	m
4	Building volume	m^3
5	Building area	m
6	Unit cost	$\$/m^3$
7	Option control	

FACILITIES CALCULATIONAL METHOD

The calculational methods for the various buildings and structures are individually straightforward. The large number of them makes the program somewhat complex. Two basic calculational paths are available for each building. In addition, several buildings have optional paths which are selected by an asterisk for the option control parameter (Word 7 in the input arrays).

BASIC CALCULATIONAL PATHS

For all building and structures except the ventilation stack, STACK, the building length (Word 1) is checked to see if it is greater than zero. If it is greater than zero, then

$$\text{Building Volume} = \text{BUILD}(4) = \text{BUILD}(1) \times \text{BUILD}(2) \times \text{BUILD}(3) \quad , \qquad (1)$$

$$\text{Building Area} = \text{BUILD}(5) = \text{BUILD}(1) \times \text{BUILD}(2) \quad . \qquad (2)$$

If BUILD(1) is zero, then BUILD(4) is checked and used directly as the building volume if it is greater than zero. If BUILD(4) is also less than or equal to zero, all further calculations are skipped for that particular building.

The building cost is calculated from the building volume and input unit cost by

$$\text{Building Cost} = \text{BUILD}(4) \times \text{BUILD}(6) \quad . \qquad (3)$$

OPTIONAL CALCULATION PATHS

For all buildings for which options are possible, the option control parameter (Word 7) is checked before any other calculations are performed. If it is an asterisk, then the optional calculation path is selected, regardless of the input building dimensions. The following list gives all the possible optional calculations by building. The option control is not checked for any other buildings or structures.

REB Options

The reactor building options are performed in the REACEL module and are described in that section.

CUTFE Option (Cu and TF Coil Electrical Equipment Building)

CUTFE(1) = 0 (4)

CUTFE(2) = 0 (5)

CUTFE(4) = TFCBV (6)

CUTFE(5) = TFCFSP (7)

CUTFE(3) = TFCBV/TFCFSP (8)

OHPFE Option (OH and PF Coil Electrical Equipment Building)

OHPFE(1) = 0 (9)

OHPFE(2) = 0 (10)

OHPFE(4) = PFCBV (11)

OHPFE(5) = PFCFSP (12)

OHPFE(3) = PFCBV/PFCFSP (13)

MGF Option (Motor-Generator-Flywheel Building)

$$MGF(1) = 0 \tag{14}$$

$$MGF(2) = 0 \tag{15}$$

$$MGF(4) = MGBV \tag{16}$$

$$MGF(5) = ESPSPM \tag{17}$$

$$MGF(3) = MGBV/ESPSPM \tag{18}$$

CONT Option (Control Room Building)

The control room may optionally be included in the administration building, ADMIN. If the control option, CONT(7), is an asterisk, the basic calculation for the control building is performed, but the cost is not calculated and volume and building area are not included in any totals.

STACK Options (Ventilation Stack)

The STACK is treated as a special case. All input dimensions, volume, and building area are always ignored. The unit cost, STACK(6), is taken as the stack cost in millions of dollars. This is the only possible calculation path for STACK.

TOTAL

The total building cost, volume, and building area are calculated using all the building and structures except STACK and possibly CONT:

$$TCOST = \sum_{i=1}^{18} CBUILD_i \quad , \tag{19}$$

$$TOTVOL = \sum_{i=1}^{18} BUILD_i(4) \quad , \tag{20}$$

$$BLAREA = \sum_{i=1}^{18} BUILD_i(5) \quad . \tag{21}$$

The effective floor area of all the building is roughly estimated for heating and cooling calculations in the HTS module, and for lighting loads in the ACPwr module, by

$$EFLOOR = TOTVOL/6 \quad . \tag{22}$$

Table 62 is a sample of the output for the facilities module.

Table 62. Sample output for the facilities module

STRUCTURES AND SITE FACILITIES

discription	dimensions l*w*h (m)			volume (m**3)	floor area (m**2)	cost ($M)
reactor building	61.7*	51.0*	39.2	123222.*	3146.	49.3
hot cell facility	64.2*	40.1*	33.5	86360.*	2945.	34.5
intake structures	15.0*	15.0*	6.0	1350._	225.	0.1
water treatment building	25.0*	25.0*	10.0	6250._	625.	0.5
recirculation structures	45.0*	15.0*	10.0	6750._	675.	0.5
tf coil elect. equip.	0.0*	0.0*	6.0	1512.*	252.	0.1
oh and pf electrical equip.	0.0*	0.0*	10.0	68990.*	6899.	5.5
bulk heating elect. equip.	26.0*	16.0*	10.0	4160._	416.	0.3
motor gen. flywheel blds.	0.0*	0.0*	26.4	18389.*	697.	1.5
cryogenic refrig. blds.	40.0*	30.0*	10.0	12000._	1200.	1.0
tritium processing building	58.0*	30.0*	30.0	52200._	1740.	14.1
ventilation building	58.0*	25.0*	30.0	43500._	1450.	11.7
radioactive waste building	40.0*	40.0*	10.0	16000._	1600.	4.3
control room building	30.0*	15.0*	10.0	4500.*	450.	0.0
diesel generator building	32.0*	16.0*	10.0	5120._	512.	0.4
administration building	90.0*	60.0*	10.0	54000._	5400.	4.3
mockup and shop building	159.9*	159.9*	7.4	189760.*	25561.	15.2
control room tunnel	0.0*	0.0*	0.0	0._	0.	0.0
ventilation stack	0.0*	0.0*	90.0	0._	0.	2.0
totals				694063.	53343.	145.5
site improvements						12.3
						*****
structures and site facilities total						157.8

\# - rectangular reactor building using supplemental information.
* - hot cell facility scaled using device deminsions
* - copper and tf coil building volume and floor area calculated in - TFCONV -
* - ohmic heating and pf coil building volume and floor area calculated in - ELEPOW -
* - motor generator flywheel building volume and floor area calculated in - ELEPOW -
* - control room included in administration building.
* - mockup and shop volume using fraction of hot cell facility and reactor building.

16. HEAT TRANSPORT MODULE

The objectives of the Heat Transport System module are to calculate the heat removed from the various reactor and facility components and to estimate the projected direct cost of the heat transport system components. It should be noted at the outset that the heat transport module considers the waste heat only and does not consider the heat that is used for power conversion. The power conversion heat is considered in the Main Heat Transport System (HTSMAIN) module. However, at the present state of Tokamak Systems Code development, which considers nonpower producing experimental facilities, HTSMAIN is not needed, and thus has not yet been developed.

The components requiring heat removal include reactor components such as first wall, shield, limiter, neutral beams/rf heaters, resistive TF coils, tritium processing, and facilities components such as cryosystem components, ac/dc conversion components, and other facility-related components. Heat deposited on these components is calculated, and the cost of the heat transport system is estimated by scaling the costs of previously estimated similar systems.

ASSUMPTIONS AND CONSTRAINTS

- All costs are in 1983 dollars.
- Primary heat exchangers are shell and tube type due to high pressure of the primary coolant.
- Intermediate heat exchangers are plate type.
- To avoid zero by zero division in the log mean temperature difference calculation, the following conditions must always be satisfied:
    - $TPC - TIC \neq TPH - TIH$,
    - $TIC - TCTO \neq TIH - TCTI$.

MODULE INPUT

Key input items supplied by user to the HTS module include cooling water temperatures at the cooling tower inlet and outlet, cold-leg and hot-leg temperatures of the primary loop and intermediate loop coolants.

There are many other input parameters obtained from other parts of the systems code. These are listed in the input parameters table, Table 63.

GOVERNING EQUATIONS

A schematic diagram of the heat transport system is presented in Fig. 97. As shown in this diagram, the components requiring waste heat removal are divided into two groups: components in direct contact with tritium and components not in direct contact with tritium. The components in the former group (Group 1) have closed primary coolant loops with primary heat exchangers to provide an additional barrier to tritium permeation. The components in the latter group (Group 2) do not have closed primary coolant loops, and thus transfer their waste heat directly to the cooling tower loop through the intermediate heat exchanger. Table 64 lists nomenclature used in the governing equation.

Heat Transport Algorithms

The basic algorithms used in this module are presented in this section. To calculate the time-average heat loads on various components, the overall plasma cycle time and duty factor are calculated (nomenclature and abbreviations are given in Table 64).

$$t_{cycle} = t_{ramp} + t_{oh} + t_{beam} + t_{burn} + t_{quench} \quad , \tag{1}$$

$$f_d = t_{burn}/t_{cycle} \quad . \tag{2}$$

Heat removed from the first wall, shield, and divertor (time-averaged):

$$Q_{fw} = P_{fw} \cdot f_d \quad , \tag{3}$$

$$Q_{sh} = P_{sh} \cdot f_d \quad , \tag{4}$$

$$Q_{div} = (P_{\alpha,div} + P_{anx}) \cdot f_d \quad . \tag{5}$$

Table 63. HTS module input parameters

Symbol	Description	Unit	Source[a]
ACLOS	ac losses in S/C TF coils	kW	C
BASEMW	Base facilities electrical load	MW	U
BDVMW	Power supply to bundle divertor	MW	C
EFLOOR	Total floor area of all plant buildings	m^2	C
ETANB	Efficiency of rf/NB injector	--	C
MGMAKE	MG set makeup power	MW	C
PAUX	Total power injected to plasma during burn	MW	C
PKWPM2	Heat removal requirement per unit of building floor	MW/m^2	U
PNB	Power supplied to the rf/NB injector during burn	MW	C
POWDAZ	Power deposited on divertor/limiter from alpha particles during burn	MW	C
POWFW	Power deposited on the first wall during burn	MW	C
POWSH	Power deposited on shield during burn	MW	C
POWTF	TF refrigeration load	MW	C
QFUEL	Tritium particle throughput into plasma	s^{-1}	C
RCIMW	Resistive losses in the copper insert	MW	C
RHOTF	Resistivity of TF coils	Ω-cm	C
RTFMW	Resistive losses in the S/C TF coils	MW	C
SUMMAX	Power required by "burn" power supplies	MW	C
TBEAM	Duration of heat injection into plasma	s	C
TBURN	Duration of plasma burn	s	C

Table 63 (continued)

Symbol	Description	Unit	Source[a]
TCTI	Cooling water temperature at cooling tower inlet	°C	U
TCTO	Cooling water temperature at cooling tower outlet	°C	U
TFACPP	TF ac power peak demand	MW	
TFTMP	TF coil operating temperature	K	C
TIC	Temperature of intermediate loop cold leg	°C	C
TIH	Temperature of intermediate loop hot leg	°C	U
TOH	Duration of ohmic heating solenoid swing time	s	C
TPC	Temperature of primary loop cold leg	°C	U
TPH	Temperature of primary loop hot leg	°C	U
TQNCH	Duration of plasma quench	s	C
TRAMP	Duration of OH coil current charge	s	C
VOL	Volume of plasma	m^3	C
WTFMW	Same as TFACPP (equivalence)	MW	C

[a]U = user supplied; C = from other parts of the code.

ORNL-DWG 84-3887 FED

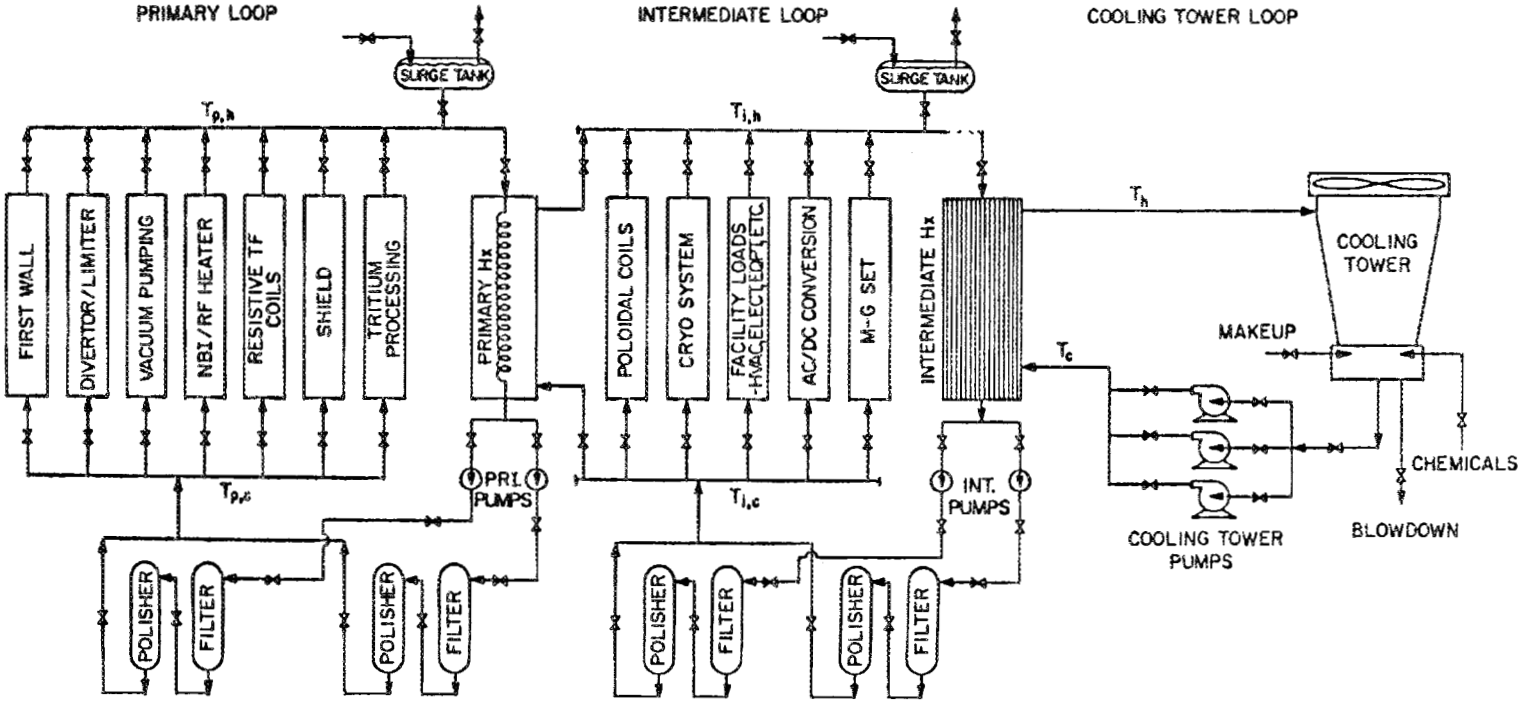

Fig. 97. Auxiliary heat transport system schematic.

Table 64. List of nomenclature used in the governing equations

Symbol	Unit	Definition
A_{floor}	m^2	Total floor area of all plant buildings
f_d	--	Duty factor = plasma burn time/plasma cycle time
L_{ac}	MW	ac losses in S/C TF coils
LMTD	°C	Log mean temperature difference
		$= \dfrac{\left(T_{p,c} - T_{i,c}\right) - \left(T_{p,h} - T_{i,h}\right)}{\ln\left(\dfrac{T_{p,c} - T_{i,c}}{T_{p,h} - T_{i,h}}\right)}$ across the primary heat exchanger
		$= \dfrac{\left(T_{i,c} - T_c\right) - \left(T_{i,h} - T_h\right)}{\ln\left(\dfrac{T_{i,c} - T_c}{T_{i,h} - T_h}\right)}$ across the intermediate heat exchanger
P_{ac}	MW	Total ac power supply to the plant
P_{aux}	MW	Total power injected to plasma
P_{beam}	MW	Power injected to plasma during burn
$P_{ci,r}$	MW	Resistive power loss in the copper insert
$P_{fac,base}$	MW	Base facility electrical load
P_{fw}	MW	Heat deposted on the first wall during plasma burn
P_{heat}	MW	dc power supplied to plasma heaters during burn
P_{sh}	MW	Heat deposited on the shield during plasma burn
$P_{tf,r}$	MW	Resistive losses in the resistive TF coils
$P_{tf,s}$	MW	Resistive losses in the S/C TF coils
P_{trit}	MW	Power supply to tritium processing
P_{vac}	MW	Power supply to plasma vacuum pumping system
$P_{\alpha,div}$	MW	Alpha particle heat deposited on divertor
$Q_{beam,ss}$	MW	Heat removed from plasma heater during burn

Table 64 (continued)

Symbol	Unit	Definition
$Q_{beam,su}$	MW	Heat removed from plasma heater during startup
Q_c	MW	Heat removed from a typical component (time-averaged)
Q_{div}	MW	Heat removed from divertor (time-averaged)
Q_{fac}	MW	Total heat removed from facility components
Q_{fw}	MW	Heat removed from first wall (time-averaged)
Q_{mg}	MW	Heat removed from MG set (time averaged)
Q_{pf}	MW	Heat removed from PF coils (time-averaged)
Q_{sh}	MW	Heat removed from shield (time-averaged)
$Q_{tf,r}$	MW	Heat removed from resistive TF coils (time-averaged)
$Q_{tf,s}$	MW	Heat removed from S/C TF coils (time-averaged)
Q_{total}	MW	Total heat removed from the plant (time-averaged)
q_{floor}	kW/m^2	Heat removal requirement per unit area of building floor
q_{trit}	s^{-1}	Tritium particle throughput into plasma
T_c	°C	Temperature of the cold leg of cooling tower loop
T_h	°C	Temperature of the hot leg of the cooling tower loop
$T_{i,c}$	°C	Temperature of the intermediate loop cold leg
$T_{i,h}$	°C	Temperature of the intermediate loop hot leg
$T_{p,c}$	°C	Temperature of the primary loop cold leg
$T_{p,h}$	°C	Temperature of the primary loop hot leg
t_{beam}	s	Duration of heat injection into plasma
t_{burn}	s	Duration of plasma burn

Table 64 (continued)

Symbol	Unit	Definition
t_{cycle}	s	Duration of a complete plasma cycle, Eq. (1)
t_{oh}	s	Duration of plasma ohmic heating
t_{qnch}	s	Duration of plasma quench
t_{ramp}	s	Duration of OH solenoid current charge
η_{beam}	-	Plasma heater injection efficiency
η_{hel}	-	Power conversion efficiency of cryo-refrigerator

It may be noted in Eqs. (3), (4), and (5) that the time-averaged rate of heat removal (i.e., continuous rate of heat removal) is obtained by multiplying the heat deposited during burn by the duty factor. It is thus assumed that these components have adequate thermal capacities to sustain the additional thermal surge during the plasma burn. It is also assumed in Eq. (5) that all the auxiliary heating power, P_{aux}, and a portion of the alpha power, $P_{\alpha,div}$, are deposited on the divertor or limiter.

Heat removal from the neutral beam injectors or rf heaters consists of two parts: heat removed during plasma burn (designated as steady state) and, during startup, as follows:

$$Q_{beam,ss} = (P_{aux}/\eta_{beam} - P_{aux}) \cdot f_d \quad , \tag{6}$$

$$Q_{beam,su} = P_{beam} \cdot (1 - \eta_{beam}) \cdot t_{beam}/t_{cycle} \quad , \tag{7}$$

$$Q_{beam} = Q_{beam,ss} + Q_{beam,su} \quad . \tag{8}$$

Waste heat (electrical losses) removed from TF coils is calculated for both the superconducting-type and resistive-type coils. For superconducting coils,

$$Q_{tf,s} = (P_{tf,s} + L_{ac}/1000) \cdot f_d \cdot \eta_{hel} \quad , \tag{9}$$

where

$$\begin{aligned} \eta_{hel} &= \text{helium cryogenic power conversion efficiency} \quad , \\ &= 2250 - 416.67 * T_{hel} \quad \text{for} \quad T_{hel} \leqslant 4.2 \text{ K} \quad , \\ &= 500 \quad \text{for} \quad T_{hel} > 4.2 \text{ K} \quad . \end{aligned}$$

and

L_{ac} is the ac losses in the TF coils.

For resistive coils, the total heat removal is the sum of the losses in the TF coils and copper inserts:

$$Q_{tf,r} = P_{tf,r} + P_{ci,r} \tag{10}$$

Waste heat removed from the liquid nitrogen system is assumed to be negligible.

Waste heat removed from the facility-related components is

$$Q_{fac} = P_{fac,base} + A_{floor} \cdot q_{floor}/1000 + 0.05\ P_{ac} \quad , \tag{11}$$

where

P_{ac} = peak ac power demand ,

= MG set makeup power (Q_{mg}) + pf burn power supply (Q_{pf}) + bundle divertor coil power supply (P_{div}) + TF coil peak ac power demand (P_{tf}) + TF coil power supply ($Q_{tf,s}$) + power supply to vacuum pumps (P_{vac}) + power supply to tritium processing (P_{trit}) + ac power input for plasma heating during burn (P_{heat}) + facility power load (Q_{fac})

In Eq. (11), it is assumed that the ac power supply has a 5% loss that requires cooling.

The various constituents of the peak ac power demand, P_{ac}, are calculated as follows.

- Q_{mg}, Q_{pf}, P_{div}, P_{tf}, and $Q_{tf,s}$ are calculated in other modules.
- Power supplied to vacuum pumps and tritium processing is calculated by using the following empirical relations:

$$P_{vac} = V_p/51 \quad , \tag{12}$$

$$P_{trit} = q_{trit}/(1.4 \times 10^{21}) \tag{13}$$

- AC prime power for plasma heating during burn is

$$P_{heat} = P_{aux}/\eta_{beam}$$

- Facility power load has two parts — fixed and variable.

  Fixed part, $P_{fac,base}$, is assumed to be 5 MW.

  Variable part = $A_{floor} \cdot q_{floor}/1000$, dependent on plant building's floor area.

Total waste heat removed is obtained by combining all component heat loads:

$$Q_{total} = Q_{fw} + Q_{sh} + Q_{div} + Q_{beam} + Q_{tf,s} + Q_{tf,r} + Q_{fac} + Q_{mg} + Q_{pf} \quad . \tag{14}$$

Cost Algorithms

The cost of the heat transport system is the combined cost of the primary, intermediate, and the cooling tower loops. The cost algorithms are basically empirical derived from costs of similar systems and components from other projects. The cost of pumps, valves, pipings, etc., is scaled as a function of waste heat removed, and the cost of heat exchangers is scaled as functions of waste heat and the log mean temperature difference (LMTD) across the heat exchanger. The costs of the primary coolant loops of the Group 1 components are estimated from the following general expressions:

$$\text{Cost} = 0.04 \cdot Q_c^{0.8} \text{ for piping, valves, pumps, etc.} \tag{15}$$

$$= 0.44 \cdot N \cdot [\Sigma Q_c/(N \cdot \text{LMTD})]^{0.8} \text{ for primary heat exchangers and ancillary equipment} \quad , \tag{16}$$

where cost is expressed in millions of dollars, and

Q_c = waste heat removed from the component, MW,

LMTD = log mean temperature difference across the primary heat exchanger, °C,

ΣQ_c = heat transferred across primary heat exchangers, MW,

N = total number of primary heat exchangers.

Group 1 components covered by Eq. (15) are first wall, shield, divertor/limiter, neutral beams and/or rf heaters, TF coils, vacuum pumping, and tritium processing. The Group 2 components do not have a closed primary loop and, thus, do not have primary heat exchangers, but they are connected to intermediate heat exchangers, and the costs are estimated using the same general expression as Eq. (15). The cost of the intermediate heat exchangers (IHX) is estimated from

$$\text{Cost} = 0.22 \cdot N\,[Q_{total}/(N \cdot \text{LMTD})]^{0.8} \quad (\$ \text{ million}) \quad , \tag{17}$$

where

N = total number of IHX ,

LMTD = LMTD across IHX, °C .

The cost of the cooling tower loop is scaled as a function of the total waste heat rejected as follows:

$$\text{Cost} = 0.1 \cdot Q_{total}^{0.7} + 5 \times 10^{-3} \cdot Q_{total} \quad . \tag{18}$$

For convenience, the cost of TF coil refrigeration system is included in this module and is expressed as

$$\text{Cost} = 0.0145\,(Q_{tf,s} \cdot 1000)^{0.7} \quad (\$ \text{ millions}) \quad . \tag{19}$$

The total cost of the heat transport system is obtained by combining Eqs. (15) through (19).

A flow diagram showing the sequence of code calculations is given in Fig. 98. Table 65 is an example of the output for the heat transport module.

ORNL-DWG 84-3893 FED

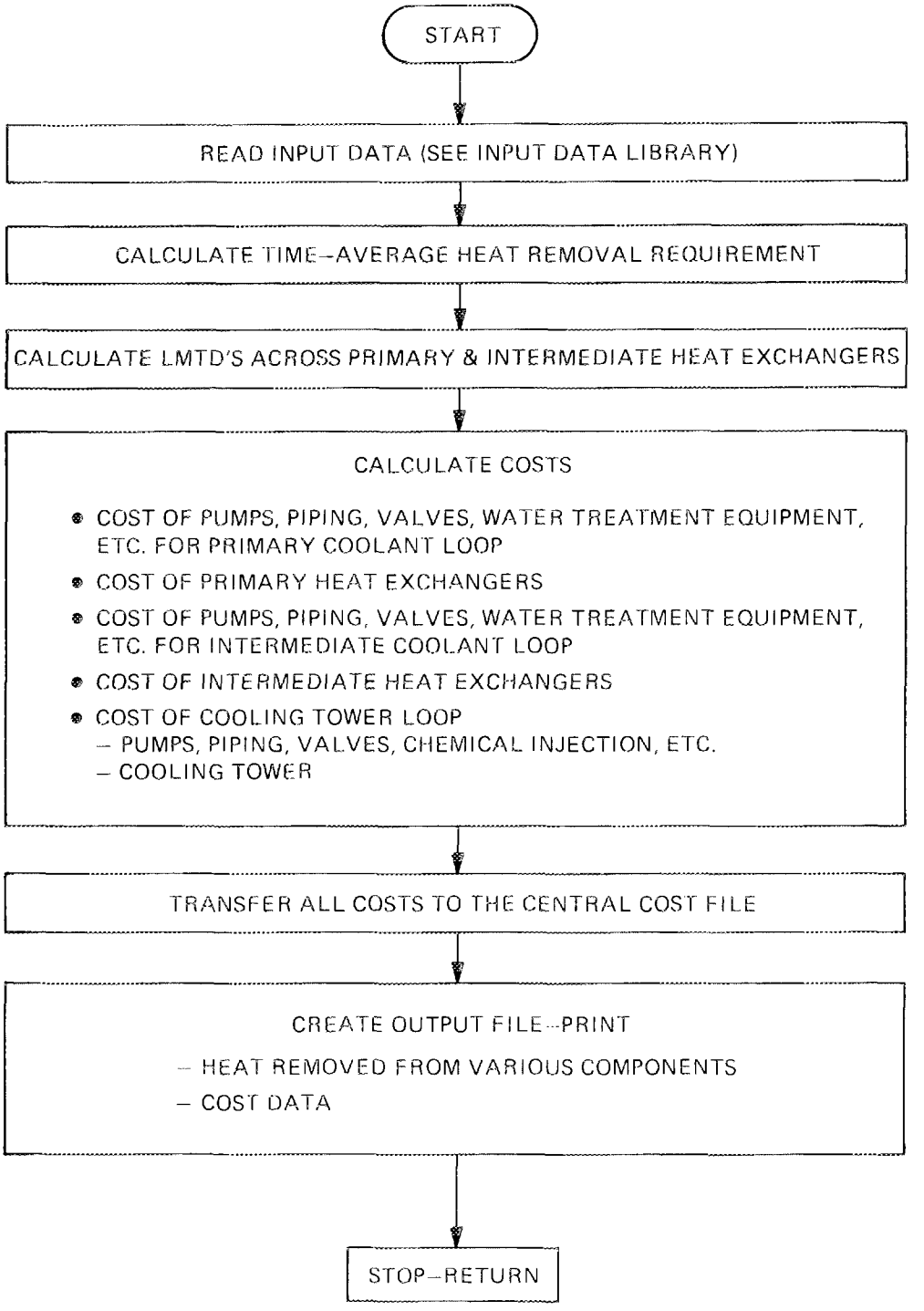

Fig. 98. Auxiliary heat transport system flowchart.

Table 65. Example output

```
********** heat transport system***************

****************
     heat load   (cycle average)
****************
     first wall heat transport (mw)                    =      72.8695
     divertor/limiter heat transport (mw)              =      47.2554
     divertor coil heat transport (mw)                 =       0.0000
     shield heat transport (mw)                        =     232.7535
     plasma heating heat transport (mw)                =       1.6087
     vacuum pumping heat transport (mw)                =       5.2381
     tritium process heat transport (mw)               =      11.6126
     pf system heat transport (mw)                     =      86.0968
     tf helium refr. heat transport (mw)               =      14.2910
     tf liq. nitrogen heat transport (mw)              =       0.0000
     resistive tf coil heat transport (mw)             =       0.0000
     facility heat transport (mw)                      =      29.4130
     total cooling tower heat transport (mw)           =     501.1386
     cooling tower flow rate (kg/sec)                  =    9799.7910


************
     cost
************
     first wall heat transport system (m$)             =       1.2362
     divertor/limiter heat transport system (m$)       =       0.8742
     divertor coil heat transport system (m$)          =       0.0000
     shield heat transport system (m1)                 =       3.1302
     plasma heating heat transport system (m$)         =       0.0585
     vacuum pumping heat transport system (m$)         =       0.1505
     tritium process heat transport system (m$)        =       0.2844
     pf system heat transport system (m$)              =       1.6092
     tf helium refr. heat transport system (m$)        =       0.3358
     tf liq. nitrogen heat transport system (m$)       =       0.0000
     resistive tf heat transport system (m$)           =       0.0000
     facility heat transport system (m$)               =       0.5983
     primary heat exchangers (m$)                      =       4.7667
     intermediate heat exchangers (m$)                 =       6.1789
     total cooling tower heat transport system (m$)=          10.2676
     total cost of heat transport system (m$)          =      29.4906


The cost of the magnet cooling system is currently calculated by
the HTS module.

     magnet cooling system cost (m$)                                =      11.7466
```

17. AC POWER MODULE

The ac power system code calculates design and cost data for the pulsed power, facility power, and backup essential power systems. The code reads pertinent input data and computes design and installed cost data for cables, structures, circuit breakers, switches, transformers, diesel generators, and no-break power supplies. Lightning arrestors and auxiliary cooling are included in the cost of the transformers. Isolation switches, instrumentation, and control are included in the price of the circuit breakers.

The ac power code is valid for values of the pulsed power substation capacity between 30 to 900 MW, and for the facility power substation capacity between 10 to 70 MW. For the pulsed power system, there are eleven tables of characteristic equipment design data that are used to calculate the cost of major equipment shown in Table 66. The pulsed power load is first calculated from electrical power demand inputs identified in Table 67. These inputs are outputs from other system codes or from a user data table. The calculated power demand, PACPMW, determines which table is selected for obtaining the characteristic data used for cost estimate calculations. Likewise, the facility power system cost estimates are determined by using one of six tables of equipment characteristic data and the computed power demand, FACPMW.

CODE BASIS

The basis for ac power code is described herein with reference to Figs. 99,100, and101. These figures are associated with the major equipment identified in Table 66. The ac power system cost is based mostly on the cost estimate data from TVA and includes the steel, concrete, and installation.

Pulsed Power System

Figure 99 is a one-line diagram of the generic pulsed power system that is the basis for the ac power code. Three transformers are shown

Table 66. Major equipment listing

Equipment	Reference
HV bussing and cables	CHVCAM - Fig. 93 CFVCAM - Fig. 94
HV circuit breakers and isolation switches	CHVCBM - Fig. 93 CFVCBM - Fig. 94
Transformers and lightning arrestors	CTRANM - Fig. 93 CXFHRM - Fig. 94
MV (13.8-kV) circuit breakers	CMVCBM - Fig. 93 CFMVCB - Fig. 94
MV (13.8-kV) bussing and cables	CMVCAM - Fig. 93 CFMVCA - Fig. 94
Diesel generators	C2DGM - Fig. 94
No-break power supplies	C4NBPM - Fig. 95
LV (480-V) power distribution system	CLVDSM
Turbine-generator	C1TGM - Future

Table 67. Input data description

Code mnemonic	Expected range	Mnemonic description
ACPRT	0.0 1.0	Print summary output data only Print detail and summary data
HVLKV	161 500	Pulsed power system utility Line voltage, kV
FVLKV	13.8 161	Facility power system line Voltage, kV
BASEMW	5 10	Facility power loads that are independent of building floor area, MW
PKWPM2	0.05 0.15	Coefficient for facility loads proportional to building floor area, kW/m^2
C2DGM	0.9 1.5	Cost of 2 diesel generator units and auxiliary equipment, $M
C4NBPM	0.2 0.4	Cost of 4 no-break (uninterruptible) power supplies, $M
CITGM	1.0 10.0	Cost of small steam turbine generator for ETRs, $M
CPMWM2	0.3 0.7	Cost coefficient for low voltage power distribution system, $\$/MW/m^2$
CLTHM	200 800	Characteristic cable length used to compute the cost of 13.8-kV power cables, m
WTFMW	1.0 300	TF coil load connected to ac power system, MW
PHEAT	5 30	Plasma heating load connected to ac power system, MW
MGMAKE	5 30	Motor-generator-flywheel load connected to ac power system, MW
SUMMAX	10 40	PF coil burn power supplies connected to ac power system, MW
BDVMW	50 100	Bundle diverter coil power supplies connected to ac power system, MW
TFHT	10 50	Cryopump motors connected to the ac power system, MW
VACMW	1 5	Vacuum pumps connected to the ac power system, MW
HTPMW	5 20	Heat transfer pump motors connected to the ac power system
T2PMW	5 15	Maximum fuel processing and tritium cleanup power demand, MW
EFLOOR	50E3 150E3	Total floor area of site buildings, m^2

ORNL–DWG 84-3894 FED

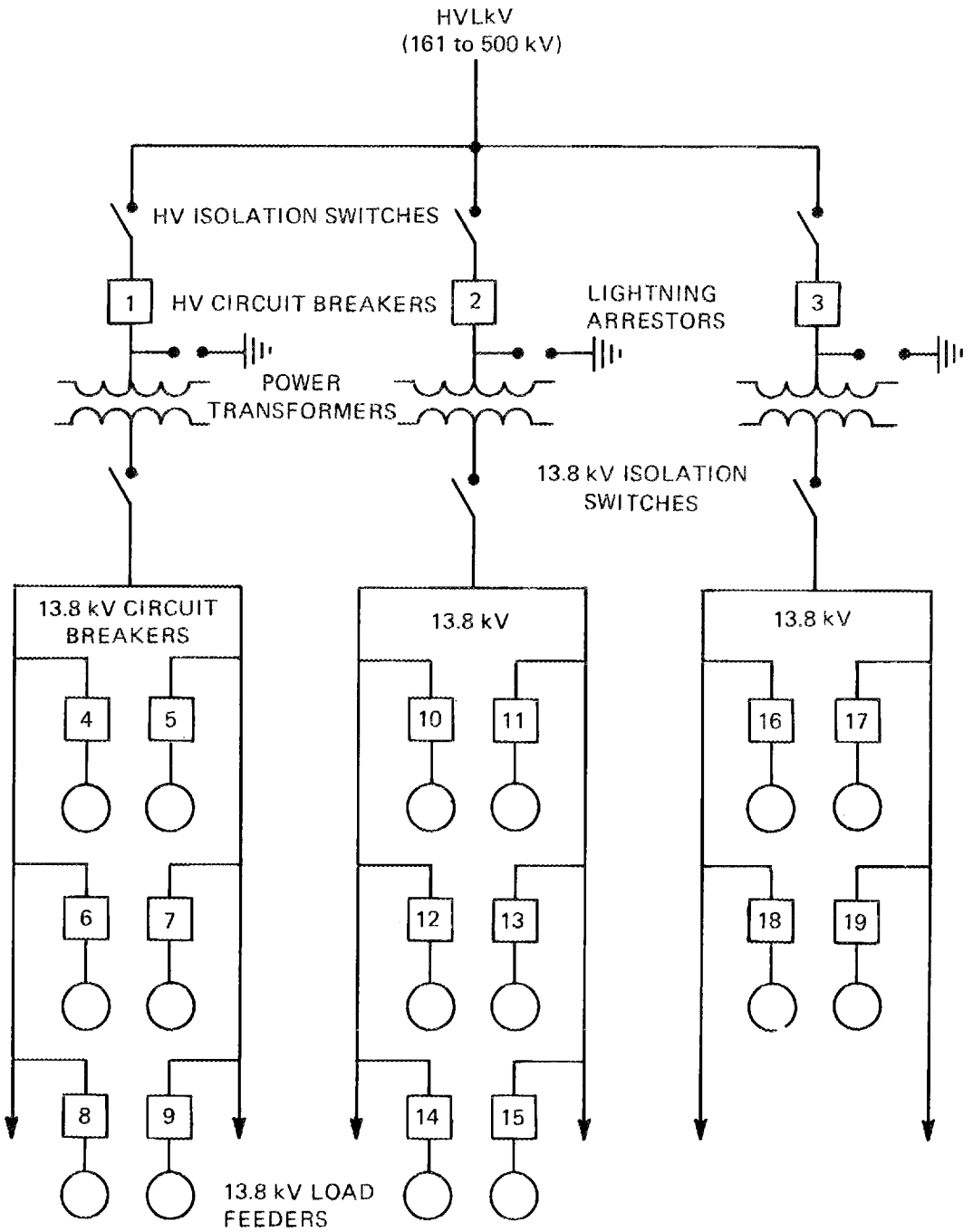

Fig. 99. Generic pulsed power system for ACPWR code.

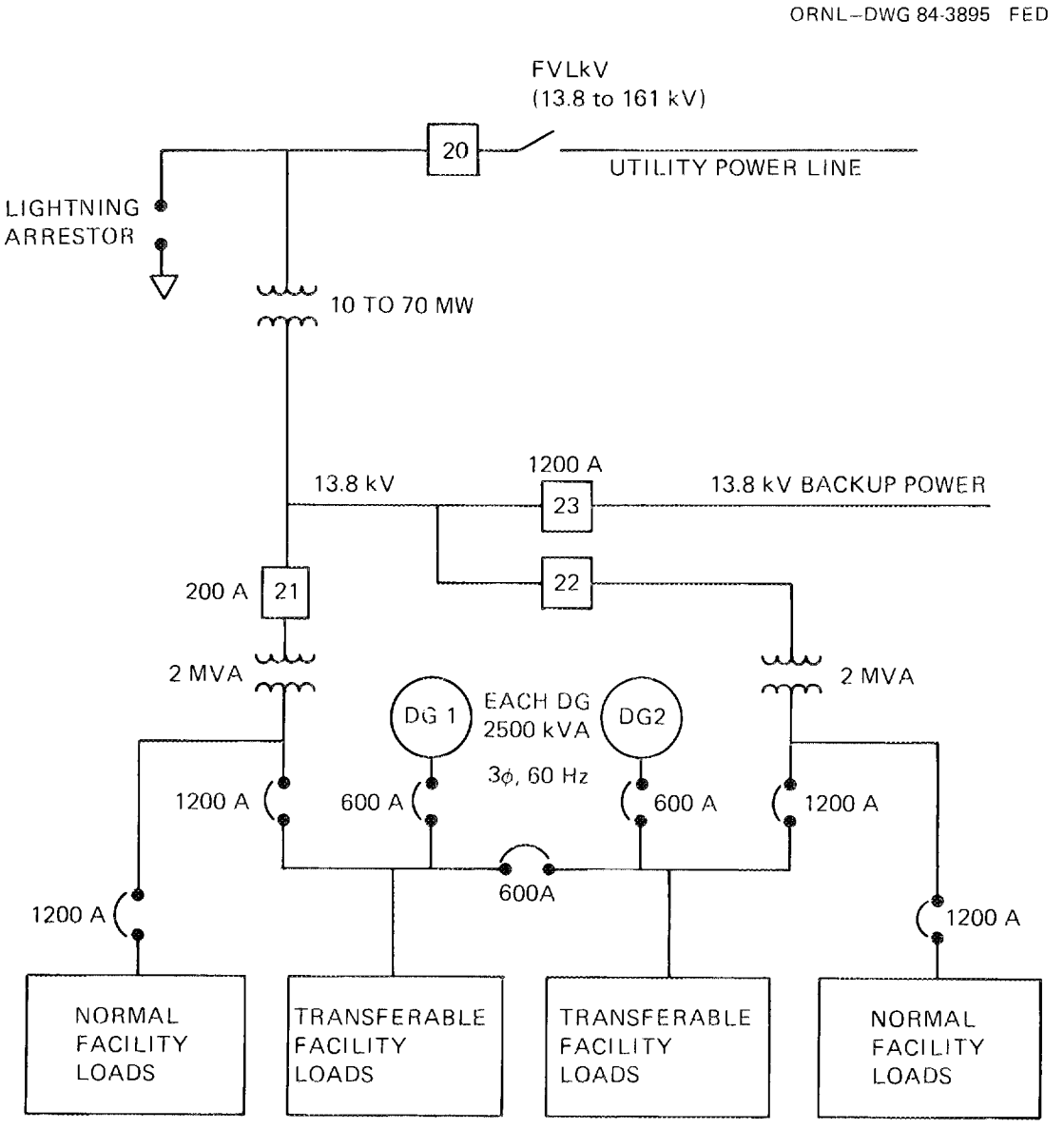

Fig. 100. One-line diagram of the facility and backup power system.

ORNL–DWG 84-3896 FED

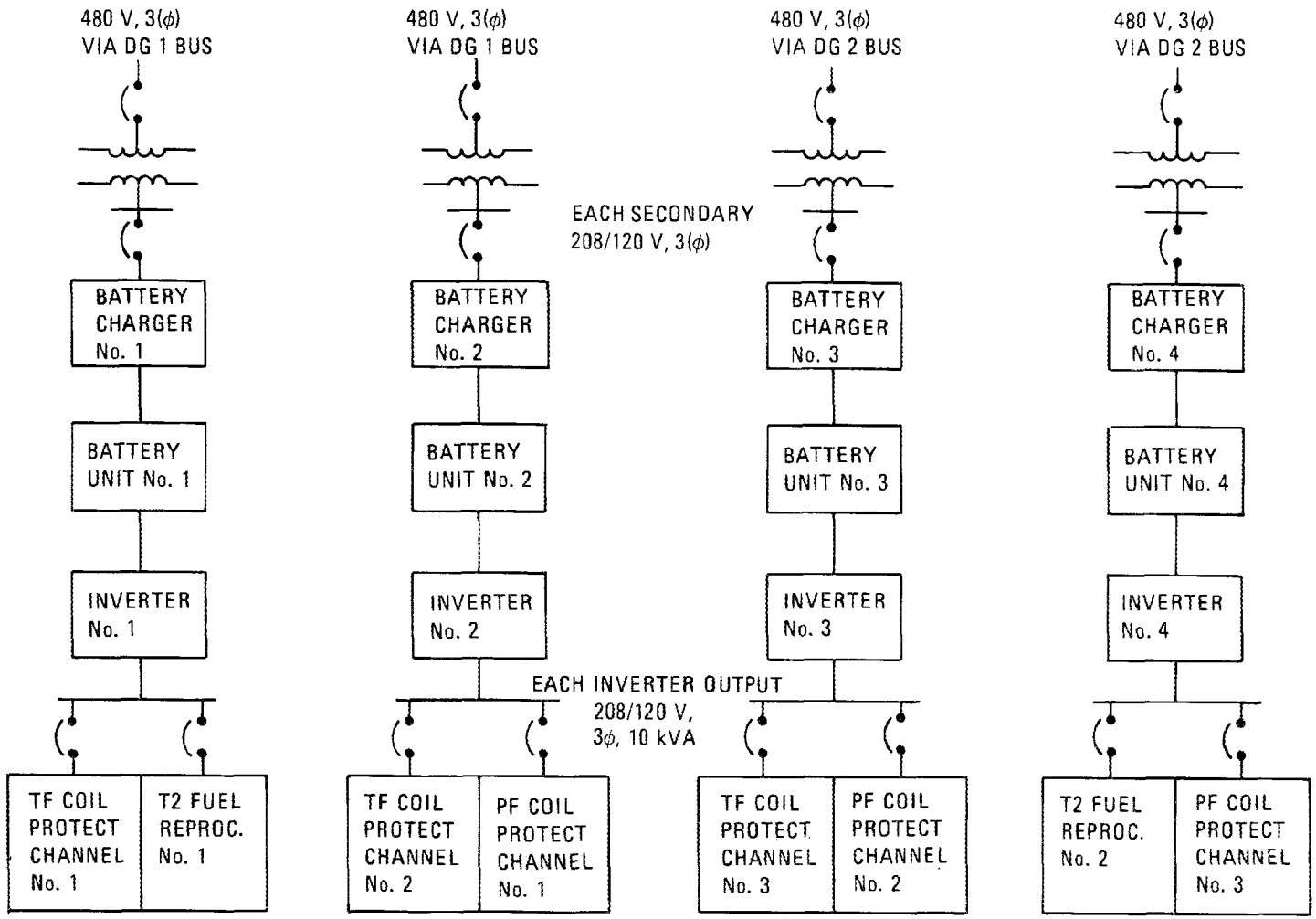

Fig. 101. No-break control power for SC coil protection systems and tritium fuel reprocessing.

in the figure, but the number may vary from one to six, depending on the pulsed power demand, PACPMW. The number and rating of the transformers and circuit breakers are read from the pertinent table associated with the value of PACPMW. For cost breakdown, the substation equipment is divided into three groups:

1. transformers and associated lightning arrestors;
2. high-voltage switches, circuit breakers, conductors, and their support structures; and
3. medium-voltage (13.8-kV) switches, circuit breakers, feeder cables, and their support structures.

The costs of these three groups of equipment and their total cost are given in the third block of data in the detailed output table.

Facility Power System

Figure 100 shows a one-line diagram that includes the facility power system, the two diesel generator units, 13.8-kV circuit breakers, and the unit substation associated with the diesel generators and facility loads. The transformer rating, number of circuit breakers, and their ratings are selected from one of the six tables. For cost breakdown purposes, facility power equipment is grouped into the same categories described for the pulsed power system.

Backup Power and the Low-Voltage Distribution System

Figure100 also includes the two diesel generators needed for essential load backup power and the associated unit substation. The diesel generator unit substation is included in the cost estimate of the low-voltage power distribution system. The low-voltage distribution includes 480-V load centers, the low-voltage power distribution wiring, and circuit protection within the buildings. Cost of the low-voltage power distribution system is based on total low-voltage power, including that taken from the pulsed power system, and the total floor area of the buildings.

Figure 101 is a one-line diagram of the four interruptible power supplies needed for critical tritium operations and vital instrumentation and control. A fixed price is assigned to this equipment and the diesel generators, since they are not expected to vary much for tokamaks designed for D-T operation.

CODE INPUT/OUTPUT DATA

The ac power code uses the input data defined in Table 67. This table also lists the expected range of each variable. The first group of data is read from the user-input table and the second group of data is outputs from other tokamak codes discussed below. A printout of the input data for three cases is given in Table 68. The three cases are for several standard utility voltages given in lines 46 and 47. All other input data are identical for these three cases.

Input data shown in Table 68 are excerpts from the user-input file. Three groups of data are given. The first group, lines 45 through 48, identifies data that are dependent on the utility line voltage to the substation, the base load (a nearly constant facility load), and the printout selector, ACPRT. If ACPRT is set equal to 1.0, the detailed output data are printed out as exhibited in Tables 69 through 71. If ACPRT is set equal to 0.0, only the summary data at the bottom of Tables 69 through 71 are printed out. This group is placed at the head of the table because it is the data that are most frequently changed.

The second group of data in Table 68, lines 50 through 55, are cost parameters which would be updated only infrequently. Code mnemonics, in most cases, provide a clue to the data represented, as well as the dimensions. PKWPM2 refers to the facility power coefficient expressed in dimensions of kilowatts per square meter. C2DGM refers to the cost of two diesel generators expressed in millions of dollars. C4NBPM refers to the cost of four no-break power supplies expressed in millions of dollars. CLTHM refers to a characteristic power cable length, in meters. CFMWM2 is a cost coefficient given in cost per megawatt per square meter of floor space.

The last group of data in Table 68 are inputs from other system code programs. These items are identified in Tables 67, 69, 70, and 71.

Table 68. Input data for ac power systems with various utility line voltages

Case 1	Case 2	Case 3
ACPRT=1.0	ACPRT=1.0	ACPRT=1.0
HVLKV=500.	HVLKV=230.	HVLKV=161.
FVLKV=138.	FVLKV=69.	FVLKV=69.
BASEMW=6.	BASEMW=6.	BASEMW=6.
C		
PKWPM2=0.15	PKWPM2=0.15	PKWPM2=0.15
C2DGM=1.3	C2DGM=1.3	C2DGM=1.3
C4NBPM=0.3	C4NBPM=0.3	C4NBPM=0.3
C1TGM=0.00	C1TGM=0.00	C1TGM=0.00
CPMWM2=0.5	CPMWM2=0.5	CPMWM2=0.5
CLTHM=600.	CLTHM=600.	CLTHM=600.
C		
WTFMW=0.5	WTFMW=0.5	WTFMW=0.5
PHEAT=5.	PHEAT=5.	PHEAT=5.
MGMAKE=20.	MGMAKE=20.	MGMAKE=20.
SUMMAX=50.	SUMMAX=50.	SUMMAX=50.
BDVMW=100.	BDVMW=100.	BDVMW=100.
TFHT=40.	TFHT=40.	TFHT=40.
VACMW=5.0	VACMW=5.0	VACMW=5.0
HTPMW=20.	HTPMW=20.	HTPMW=20.
T2PMW=10.	T2PMW=10.	T2PMW=10.
EFLOOR=90.E3	EFLOOR=90.E3	EFLOOR=90.E3
Output data in Table 69	Output data in Table 70	Output data in Table 71

Table 69. AC power system output data for Case 1

AC POWER SYSTEM OUTPUT DATA
INPUTS FROM OTHER SYSTEM CODE PROGRAMS
* OUTPUTS TO OTHER SYSTEM CODE PROGRAMS

BASEMW,	FACILITY BASE POWER LOAD, MW	6.00
EFLOOR#,	EFFECTIVE TOTAL FLOOR SPACE, SQ.M	90000.00
PKWPM2,	POWER NEEDED PER FLOOR AREA, KW/SQ.M	0.15
FCSHT,	TOTAL POWER TO FACILITY LOADS, MW	33.00
MGMAKE#,	POWER TO MGF UNITS, MW	20.00
SUMMAX#,	POWER TO BURN POWER SUPPLIES, MW	50.00
BDVMW#,	POWER TO BUNDLE DIV. SUPPLIES, MW	100.00
WTFMW#,	POWER TO TF COIL POWER SUPPLIES, MW	0.50
PHEAT#,	POWER TO PLASMA HEATING SUPPLIES, MW	5.00
TFHT#,	POWER TO CRYOGENIC COMP. MOTORS, MW	40.00
VACMW#,	POWER TO VACUUM PUMP MOTORS, MW	5.00
HTPMW#,	POWER TO HTS PUMP MOTORS, MW	20.00
FCSHT,	BACKUP POWER TO FACILITY LOADS, MW	33.00
T2PMW#,	POWER TO TRITIUM PROCESSING, MW	10.00
PACPMW*,	TOTAL PULSED POWER SYSTEM LOAD, MW	270.00
HVLKV#,	PULSED POWER UTILITY LINE VOLTAGE	500.00
N3PHT,	NUMBER OF 3 PHASE TRANSFORMERS	3.00
TMVA,	MAX. MVA OF EACH TRANSFORMER	100.00
PN8KRS,	NUMBER OF 13.8KV CIRCUIT BREAKERS	18.00
BKRMVA,	SHORT CIRCUIT MVA OF CIRCUIT BREAKERS	1000.00
CPHVSM,	COST OF EQUIPMENT ON HV SIDE, $M	3.70
CTRANM,	COST OF XFORMERS & LIGHTNING PROTECT.	5.65
CPMVSM,	COST OF EQUIPMENT ON 13.8KV SIDE, $M	3.09
CPACPM,	COST OF PULSED POWER SYSTEM, $M	12.44
FVLKV#,	FACILITY POWER LINE VOLTAGE	138.00
FTMVA,	MAX. MVA OF THE FACILITY TRANSFORMER	40.00
FNBKRS,	NUMBER OF 13.8KV CIRCUIT BREAKERS	6.00
FBKMVA,	SHORT CIRCUIT MVA OF CIRCUIT BREAKERS	500.00
CFHVSM,	COST OF EQUIPMENT ON HV SIDE, $M	0.43
CXFMRM,	COST OF XFORMER & LIGHTNING PROTECT,$M	0.66
CFMVSM,	COST OF EQUIPMENT ON 13.8KV SIDE, $M	0.54
CFACPM,	COST OF FACILITY AC POWER SYSTEM	1.63

AC POWER SUMMARY

PACPMW*,	TOTAL PULSED POWER SYSTEM LOAD, MW	270.00
(POWER TO THE HEAT TRANSFER SYSTEM)		
HVLKV#,	PULSED POWER UTILITY LINE VOLTAGE, KV	500.00
FCSHT,	TOTAL FACILITY POWER LOAD, MW	33.00
FVLKV#,	FACILITY POWER LINE VOLTAGE, KV	138.00
CPACPM,	COST OF THE PULSED POWER SYSTEM, $M	12.44
CFACPM,	COST OF FACILITY AC POWER SYSTEM, $M	1.63
C2DGM,	COST OF 2 DG UNITS(480V,2500KW EA.)$M	1.30
C4NBPM,	COST OF 4 NO BREAK POWER SUPPLIES, $M	0.30
CLVDSM,	COST OF LV POWER DISTRIBUTION, $M	5.09
C1TGM,	COST OF 1 TG UNIT(480V, 2500KW), $M	0.00
CTACPM*,	INSTALLED COST OF AC POWER SYSTEM, $M	20.75

Table 70. AC power system output data for Case 2

AC POWER SYSTEM OUTPUT DATA
INPUTS FROM OTHER SYSTEM CODE PROGRAMS
* OUTPUTS TO OTHER SYSTEM CODE PROGRAMS

BASEMW,	FACILITY BASE POWER LOAD, MW	6.00
EFLOOR#,	EFFECTIVE TOTAL FLOOR SPACE, SQ.M	90000.00
PKWPM2,	POWER NEEDED PER FLOOR AREA, KW/SQ.M	0.15
FCSHT,	TOTAL POWER TO FACILITY LOADS, MW	33.00
MGMAKE#,	POWER TO MGF UNITS, MW	20.00
SUMMAX#,	POWER TO BURN POWER SUPPLIES, MW	50.00
BDVMW#,	POWER TO BUNDLE DIV. SUPPLIES, MW	100.00
WTFMW#,	POWER TO TF COIL POWER SUPPLIES, MW	0.50
PHEAT#,	POWER TO PLASMA HEATING SUPPLIES, MW	5.00
TFHT#,	POWER TO CRYOGENIC COMP. MOTORS, MW	40.00
VACMW#,	POWER TO VACUUM PUMP MOTORS, MW	5.00
HTPMW#,	POWER TO HTS PUMP MOTORS, MW	20.00
FCSHT,	BACKUP POWER TO FACILITY LOADS, MW	33.00
T2PMW#,	POWER TO TRITIUM PROCESSING, MW	10.00
PACPMW*,	TOTAL PULSED POWER SYSTEM LOAD, MW	270.00
HVLKV#,	PULSED POWER UTILITY LINE VOLTAGE	230.00
N3PHT,	NUMBER OF 3 PHASE TRANSFORMERS	3.00
TMVA,	MAX. MVA OF EACH TRANSFORMER	100.00
PNBKRS,	NUMBER OF 13.8KV CIRCUIT BREAKERS	18.00
BKRMVA,	SHORT CIRCUIT MVA OF CIRCUIT BREAKERS	1000.00
CPHVSM,	COST OF EQUIPMENT ON HV SIDE, $M	2.40
CTRANM,	COST OF XFORMERS & LIGHTNING PROTECT.	4.65
CPMVSM,	COST OF EQUIPMENT ON 13.8KV SIDE, $M	3.09
CPACPM,	COST OF PULSED POWER SYSTEM, $M	10.14
FVLKV#,	FACILITY POWER LINE VOLTAGE	69.00
FTMVA,	MAX. MVA OF THE FACILITY TRANSFORMER	40.00
FNBKRS,	NUMBER OF 13.8KV CIRCUIT BREAKERS	6.00
FBKMVA,	SHORT CIRCUIT MVA OF CIRCUIT BREAKERS	500.00
CFHVSM,	COST OF EQUIPMENT ON HV SIDE, $M	0.30
CXFMRM,	COST OF XFORMER & LIGHTNING PROTECT,$M	0.55
CFMVSM,	COST OF EQUIPMENT ON 13.8KV SIDE, $M	0.54
CFACPM,	COST OF FACILITY AC POWER SYSTEM	1.39

AC POWER SUMMARY

PACPMW*,	TOTAL PULSED POWER SYSTEM LOAD, MW (POWER TO THE HEAT TRANSFER SYSTEM)	270.00
HVLKV#,	PULSED POWER UTILITY LINE VOLTAGE, KV	230.00
FCSHT,	TOTAL FACILITY POWER LOAD, MW	33.00
FVLKV#,	FACILITY POWER LINE VOLTAGE, KV	69.00
CPACPM,	COST OF THE PULSED POWER SYSTEM, $M	10.14
CFACPM,	COST OF FACILITY AC POWER SYSTEM, $M	1.39
C2DGM,	COST OF 2 DG UNITS(480V,2500KW EA.)$M	1.30
C4NBPM,	COST OF 4 NO BREAK POWER SUPPLIES, $M	0.30
CLVDSM,	COST OF LV POWER DISTRIBUTION, $M	5.09
C1TGM,	COST OF 1 TG UNIT(480V, 2500KW), $M	0.00
CTACPM*,	INSTALLED COST OF AC POWER SYSTEM, $M	18.21

Table 71. AC power system output data for Case 3

AC POWER SYSTEM OUTPUT DATA
INPUTS FROM OTHER SYSTEM CODE PROGRAMS
* OUTPUTS TO OTHER SYSTEM CODE PROGRAMS

BASEMW,	FACILITY BASE POWER LOAD, MW	6.00
EFLOOR#,	EFFECTIVE TOTAL FLOOR SPACE, SQ.M	90000.00
PKWPM2,	POWER NEEDED PER FLOOR AREA, KW/SQ.M	0.15
FCSHT,	TOTAL POWER TO FACILITY LOADS, MW	33.00
MGMAKE#,	POWER TO MGF UNITS, MW	20.00
SUMMAX#,	POWER TO BURN POWER SUPPLIES, MW	50.00
BDVMW#,	POWER TO BUNDLE DIV. SUPPLIES, MW	100.00
WTFMW#,	POWER TO TF COIL POWER SUPPLIES, MW	0.50
PHEAT#,	POWER TO PLASMA HEATING SUPPLIES, MW	5.00
TFHT#,	POWER TO CRYOGENIC COMP. MOTORS, MW	40.00
VACMW#,	POWER TO VACUUM PUMP MOTORS, MW	5.00
HTPMW#,	POWER TO HTS PUMP MOTORS, MW	20.00
FCSHT,	BACKUP POWER TO FACILITY LOADS, MW	33.00
T2PMW#,	POWER TO TRITIUM PROCESSING, MW	10.00
PACPMW*,	TOTAL PULSED POWER SYSTEM LOAD, MW	270.00
HVLKV#,	PULSED POWER UTILITY LINE VOLTAGE	161.00
N3PHT,	NUMBER OF 3 PHASE TRANSFORMERS	3.00
TMVA,	MAX. MVA OF EACH TRANSFORMER	100.00
PN8KRS,	NUMBER OF 13.8KV CIRCUIT BREAKERS	18.00
BKRMVA,	SHORT CIRCUIT MVA OF CIRCUIT BREAKERS	1000.00
CPHVSM,	COST OF EQUIPMENT ON HV SIDE, $M	1.98
CTRANM,	COST OF XFORMERS & LIGHTNING PROTECT.	4.25
CPMVSM,	COST OF EQUIPMENT ON 13.8KV SIDE, $M	3.09
CPACPM,	COST OF PULSED POWER SYSTEM, $M	9.33
FVLKV#,	FACILITY POWER LINE VOLTAGE	69.00
FTMVA,	MAX. MVA OF THE FACILITY TRANSFORMER	40.00
FN8KRS,	NUMBER OF 13.8KV CIRCUIT BREAKERS	6.00
FBKMVA,	SHORT CIRCUIT MVA OF CIRCUIT BREAKERS	500.00
CFHVSM,	COST OF EQUIPMENT ON HV SIDE, $M	0.30
CXFMRM,	COST OF XFORMER & LIGHTNING PROTECT,$M	0.55
CFMVSM,	COST OF EQUIPMENT ON 13.8KV SIDE, $M	0.54
CFACPM,	COST OF FACILITY AC POWER SYSTEM	1.39

AC POWER SUMMARY

PACPMW*,	TOTAL PULSED POWER SYSTEM LOAD, MW (POWER TO THE HEAT TRANSFER SYSTEM)	270.00
HVLKV#,	PULSED POWER UTILITY LINE VOLTAGE, KV	161.00
FCSHT,	TOTAL FACILITY POWER LOAD, MW	33.00
FVLKV#,	FACILITY POWER LINE VOLTAGE, KV	69.00
CPACPM,	COST OF THE PULSED POWER SYSTEM, $M	9.33
CFACPM,	COST OF FACILITY AC POWER SYSTEM, $M	1.39
C2DGM,	COST OF 2 DG UNITS(480V,2500KW EA.)$M	1.30
C4NBPM,	COST OF 4 NO BREAK POWER SUPPLIES, $M	0.30
CLVDSM,	COST OF LV POWER DISTRIBUTION, $M	5.09
C1TGM,	COST OF 1 TG UNIT(480V, 2500KW), $M	0.00
CTACPM*,	INSTALLED COST OF AC POWER SYSTEM, $M	17.40

Exhibits of the output data for the ac power code are given in Tables 69, 70, and 71 for Cases 1, 2, and 3 of Table 68. The input data are also included at the appropriate places in the detailed table so that the ac power system is completely defined in the printout. Except for FCSHT and PACPMW, all the data in the first two blocks are input data. The third block of data defines the pulsed power system equipment ratings, cost of three major groups, and the cost of the entire pulsed power system. Similar data for the facility power system are given in Block 4.

AC power summary data are all the data that are generally needed from the code. As shown in Tables 69, 70, and 71, the summary data includes total pulsed and facility power loads, their line voltages, and the cost of major groups of equipment. The essential power equipment and the low-voltage power distribution cost are added to the cost of the pulsed power system and facility power system to obtain the total system cost on the last line. An entry for a small demonstration turbine-generator may be used if the tokamak generates some electricity. There are only two outputs of this table used in other codes: PACPMW and CTACPM.

CODE EQUATIONS

Total pulsed power load, PACPMW, is equal to the sum of the loads identified in the second block of Tables 69, 70, or 71. The total facility power load, FCSHT, is defined by the following equation:

$$FCSHT = BASEMW + EFLOOR * PKWPM2/1000 + 0.05\ PACPMW \quad ,$$

where

BASEMW = facility base power load, MW,

EFLOOR = total floor area of all buildings on the site,

PKWPM2 = power coefficient = 0.15 read from the user's table.

The last term of the above equation represents facility power backup for the pulsed power system.

The computed PACPMW is used as the entry to one of eleven tables that define the number of three-phase transformers, N3PHT, transformer

power, rating, TMVA, number of 13.8-kV circuit breakers, PNBKRS, circuit breaker interrupt capacity, BKRMVA, and maximum steady-state current for the circuit breaker, PCIKA. These tables and the selection logic are described under the FORTRAN listing below. Likewise, the computed FCSHT is used as the entry to one of six tables. There is only one facility power transformer, so this variable is not included in these six tables.

The following pulsed power system cost equations are used in the ac power code (see Block 270 equations in the FORTRAN listing).

Cost of HV cables and bussing, CHVCAM, $ million

$$CHVCAM = 2.5E\text{-}3\ (N3PHT)(TMVA)^{0.8}\ (HVLKV)^{0.16} \quad ,$$

where HVLKV is the utility line voltage.

Cost of HV circuit breakers, CHVCBM, $ million

$$CHVCBM = 4.95E\text{-}5\ (N3PHT)(10*TMVA)^{0.8}(HVLKV)^{0.7} \quad .$$

Cost of transformers and lightning arrestors, CTRANM, $ million

$$CTRANM = 1.0E\text{-}2\ (N3PHT)(TMVA)^{0.8}(HVLKV)^{0.25} \quad .$$

Cost of 13.8-kV circuit breakers, CMVCBM, $ million

$$CMVCBM = 1.5E\text{-}5\ (PNKBRS)(BKRMVA)^{0.8}(PC1KA)^{0.37} \quad .$$

Cost of 13.8-kV power cables, CMBCAM, $ million

$$CMVCAM = 6.0E\text{-}5\ (PNBKRS)(CLTHM)(PC1KA)/500 \quad ,$$

where CLTHM is a characteristic cable length read from the user table = 600 m.

Low-voltage, pulsed power, TLVPMW, MW:

$$TLVPMW = FCSHT + T2PMW + VACMW + 0.5(TFHT + SUMMAX) \quad .$$

The right-hand terms are defined in Table 67.

Cost of low-voltage power distribution, CLVDSM, $ million:

CLVDSM = CPMWM2 * TLVPMW * EFLOOR/1.0E-6 ,

where CPMWM2 = 0.5 is a cost coefficient read from the user's table.

Cost of equipment on the high-voltage side of the transformers, CPHVSM, $ million:

CPHVSM = CHVCAM + CHVCBM .

Cost of equipmemt on the 13.8-kV side of the transformers, COMVSM, $ million:

CPMVSM = CMVCBM + CMBCAM .

Total pulsed power system cost, CPACPM, $ million:

CPACPM = CHVCAM + CHVCBM + CTRANM + CMVCBM + CMVCAM .

Another similar set of equations is used to calculate the cost of the facility power system (see Block 280 equations of the FORTRAN listing).

CODE FLOW DIAGRAM

The ACPWR code flow diagram is given in Fig. 102. Nine loads demands and the total floor area of all buildings are other code inputs to the ac power code. The user-controlled data file provides the other inputs. Pulsed power system table lookup and computation operations are then performed. Similar table lookup and computations are performed for the facility power system. Essential power costs are then read from the user-input table. A print option permits printing all the output data or only the summary data exhibited in Tables 69, 70, and 71.

FORTRAN LISTING

The FORTRAN listing (ACPWR.FOR) identifies mnemonics at the beginning that are defined in Tables 67, 69, 70, and 71. Program inputs are identified, followed by the program algorithms. The eleven

ORNL--DWG 84-3897 FED

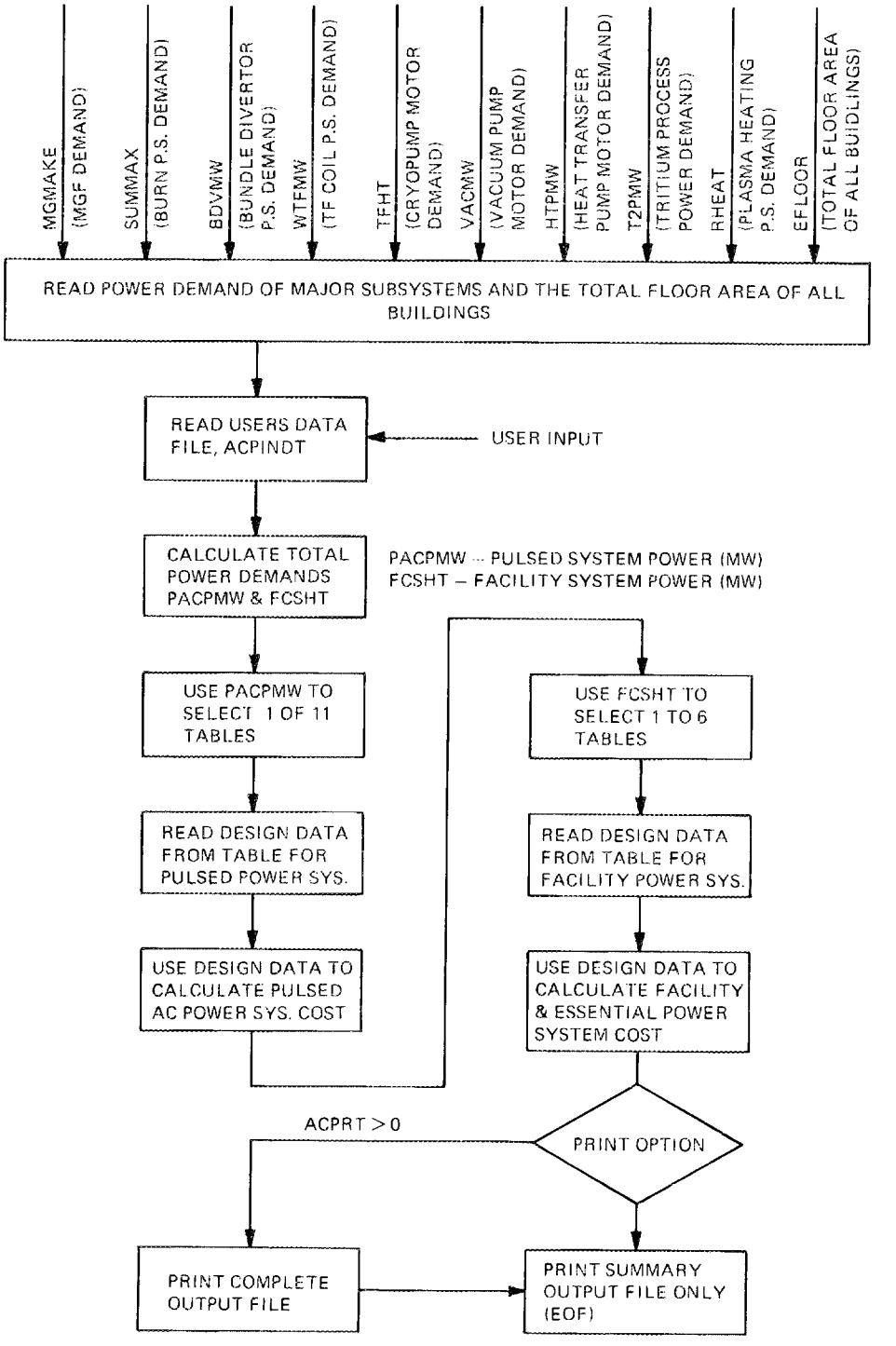

Fig. 102. AC power system code flow diagram.

"if statements" near the beginning define the power demand bracket for PACPMW and the corresponding table under numbers 195 to 270. The pulsed power system cost algorithms are listed in Block 270. Then, six "if statements" define the power demand bracket for FCSHT and the corresponding table under numbers 310 through 360. Facility power cost algorithms are listed under 280. The "if (acprt)" statement just before 380 and the value assigned to (acprt) determine whether the entire output or only the summary is printed.

18. INSTRUMENTATION AND CONTROL MODULE

The supervisory control and instrumentation code, IAC, reads the user-input data and data from other system code files and makes cost calculations for eleven groups of process instrumentation and control and for ten groups of plasma diagnostics instrumentation. The process instrumentation and control groups and the plasma diagnostics instrumentation groups are defined in Tables 72 and 73. In addition, the archiving computer cost is calculated based on user diagnostics input data or data from a default diagnostics table. The diagnostics instrumentation cost is calculated for any one of the operating phases (hydrogen, deuterium, or tritium) as directed by user-input data.

IAC CODE BASIS

The cost of the eleven groups of SCDS process instrumentation and control is based on multiplying a cost coefficient by the cost of the group process equipment or number of modules raised to a power defined by a user-input cost exponent, CEXP. The cost exponent is currently set equal to 0.6 for all groups. For the convenience of the user, CEXP is the same for all the process groups so that all groups can be changed with only one variable. The normalized equation for the I&C cost of a process group, $IC/IC_0 = (EC/EC_0)$**CEXP is plotted in Fig. 103. The cost exponent greatly influences the curvature, as indicated in the figure. If the I&C cost were directly proportional to the process equipment cost, CEXP should be set to 1.0. However, increasing the size of the process equipment does not greatly increase the cost of the I&C, but increasing the number of process units has a stronger impact on increasing this cost. The influence of these considerations can only be implemented with the cost exponential, CEXP, in the simplified code, IAC. The recommended range of values for CEXP is between 0.5 and 0.9.

The cost coefficients of process I&C are expressed in terms of the unity crossover point of Fig. 103, that is, $1/(EC_0$**CEXP) so that changing the cost exponent CEXP does not change the crossover point. Also, in the

Table 72. Definition of IAC process groups

Group number	Mnemonic	Description
1	TCOFPH-	Plasma heating SCDS cost, $ million
2	TCOFMC-	Magnet systems SCDS cost, $ million
3	TCOFAC-	AC power systems SCDS cost, $ million
4	TCGNES-	Power generator and energy stork SCDS cost, $ million
5	TCOFRC-	Reactor components and structures I&C cost, $ million
6	TCOFCV-	Cryogenic and vacuum systems SCDS cost, $ million
7	TCOFFS-	Fueling and processing SCDS cost, $ million
8	TCOFHT-	Heat transport systems SCDS cost, $ million
9	TCOFMN-	Facility and site monitoring SCDS cost, $ million
10	TCOFBF-	Building facilities I&C cost, $ million
11	TCOFRH-	Remote handling system SCDS cost, $ million

NOTES: SCDS = supervisory control and data system,
I&C = instrumentation and control,
MON = monitoring,
COMP = components, and
GEN = generator.

Table 73. Definition of IAC diagnostics groups

Group number	Mnemonic	Diagnostic description
1	EDENSITY	I&DP for measuring plasma electron density
2	E. TEMP	I&DP for measuring plasma electron temperature
3	ION TEMP	I&DP for measuring plasma ion temperature
4	IMPURITY	I&DP for measuring plasma impurity concentration
5	PWR LOSS	I&DP for measuring plasma power radiation losses
6	MAGNETIC	I&DP for measuring electromagnetic properties of the plasma
7	P. INSTAB	I&DP for measuring plasma instability wave activity
8	FPRODPAR	I&DP for measuring plasma fusion particle emission
9	ENVIRON	I&DP for measuring environment outside of the plasma
10	MISCEL	I&DP for measurements needed for machine prestartup conditioning, inspection, alignment, and calibration

NOTE: I&DP = instrumentation and data processing.

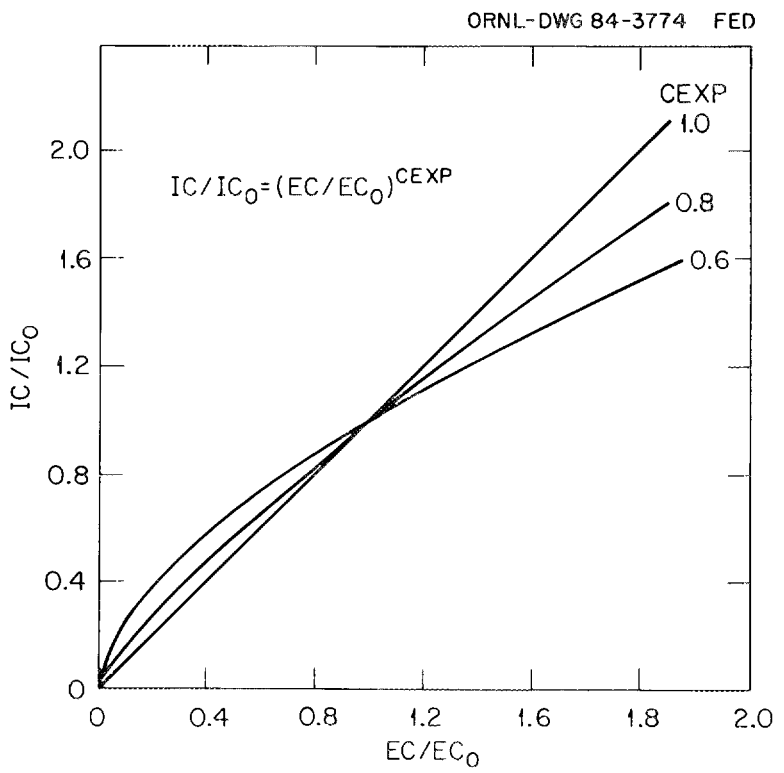

Fig. 103. Normalized I&C cost and normalized equipment cost for several values of CEXP.

future when better cost data become available, it is easy to update the crossover point cost, EC_0.

Cost of the diagnostic I&DP, identified in Table 73, is based on the number on each group selected by the user or defined by a number in the default table, IACIN. The I&DP cost of each group is the average cost of a diagnostic in the group, TMCPDM, times the number of diagnostics in the group. No attempt is made to apply a cost exponent because the cost of most diagnostics is high and only one or two of each kind are used. Three phases of operation are assumed: natural hydrogen, deuterium, and tritium. The user table or default table provides for entering the number of each kind of diagnostic to be installed during each phase so that the diagnostic I&DP cost for each phase is determined as described later in this section. Likewise, the cost of archiving computer equipment is based on table entries for the three phases of operation.

CODE INPUT DATA

Inputs from other subroutines are defined in this section, together with user inputs from diagnostics data tables. Inputs from other subroutines are defined below for each of the eleven process groups:

Group 1. Plasma Heating

tcofnb-total cost of neutral beam systems, $ million
rfd-total cost of the rf systems, $ million

Group 2. Magnet System

ctfpct-total cost of TF coil power conversion system, $ million
tcost-total cost of PF coil power conversion system, $ million

Group 3. AC Power Distribution Systems

cpacpm-total cost of pulsed ac power system, $ million
cfacpm-total cost of facility ac power system ,$ million
clvdsm-total cost of low-voltage power distribution, $ million

Group 4. Power Generation and Energy Storage

c2dgm-total of the diesel generators, $ million
c4nbpm-total cost of the uninterruptible power supplies, $ million
c1tgm-total cost of turbine generators, $ million
es-total cost of the energy storage system (mgf units), $ million

Group 5. Reactor Components and Structures

tfno-number of TF coils
notm-number of blanket test modules (notm = 6)

Group 6. Cryogenic and Vacuum Systems

tccryo-total cost of cryo system, $ million
tovx6-total cost of vacuum system, $ million

Group 7. Fueling and Fuel Processing Systems

cfuels-total cost of fuel injection system, $ million
ctsc-total cost of tritium processing I&C, $ million

Group 8. Heat Transport Systems

chts-total cost of heat transfer system, $ million

Group 9. Facility and Site Monitoring

efloor-total floor area of site buildings, m^2
ctmon-cost of tritium process monitoring, $ million

Group 10. Building Facilities

tbcost-cost of buildings, excluding site preparation, $ million

Group 11. Remote Handling

cmtotm-remote handling equipment cost, $ million

The process I&C cost coefficients are given under the "PRINCIPAL IAC CODE EQUATIONS" section. They are defined by the generic equation

$$\text{Cost coefficient mnemonic} = 1.0/(EC_0{**}CEXP) \quad ,$$

where EC_0 is the cost of the process equipment at the crossover point of Fig.103. This expression for the cost coefficient facilitates updating the code and entering CEXP, as described in the previous section.

Both the user's and the default diagnostic input tables provide the type of input data shown in Table 74. The diagnostic group number K and the mnemonic for the group are given in columns one and two. The number of diagnostics to be installed in each operating phase are given under columns three, four, and five. The average cost per diagnostic is given under column six, and the cost of refurbishing for tritium phase operations is given under column seven. The refurbishing cost is for removing diagnostics not hardened for tritium-phase operations or for upgrading with radiation shielding and offsets so that they can be used for tritium-phase operations.

Line 11 of the diagnostics input data is for archiving computer equipment which is enhanced over the life of the machine. The function of this equipment is for off-line processing and storage of large quantities of data for each shot or machine experiment. This data can be retrieved and evaluated several years after the shot has been made. The numbers in line 11 refer to the cost of this equipment in $0.1 million increments, as indicated under column six. Column six is multiplied by columns three, four, and five to obtain the archiving computer cost for the three phases of operation. Referring to Table 74, the archiving computer equipment costs are $2.3, $2.8, and $3.2 million for the hydrogen, deuterium, and tritium phases of operation. This data can be changed in the user's table to agree with cost based on TFTR or MFTF-B expenditures for this equipment at some future date.

The code default table uses a row of data to represent a column of data, as shown in Table 75, which also contains five other data inputs in addition to the data in Table 74. The other inputs are the cost

Table 74. Default diagnostics input table

K	Diagnostic group	NOHP	NODP	NOTP	TMCPDM	RFCPDM
1	EDENSITY	1	2	0	1.50	0.2
2	E.TEMP	2	1	0	1.30	0.2
3	ION TEMP	2	2	0	1.50	0.4
4	IMPURITY	3	2	1	0.70	0.3
5	PWR LOSS	1	1	1	0.40	0.1
6	MAGNETIC	3	1	1	0.30	0.1
7	P.INSTAB	2	1	0	0.70	0.2
8	FPRODPAR	0	2	2	0.80	0.2
9	ENVIRON	3	2	1	0.70	0.1
10	MISCEL	4	2	3	0.40	0.1
11	ARCHIVE	23	28	32	0.10	0.0

NOHP = Number of diagnostic types in Group K for the H2 phase
NODP = Number of diagnostic types in Group K added for the D2 phase
NOTP = Number of diagnostic types in Group K added for the TD phase
TMCPDM = Average cost of a diagnostic type in Group I, $ million
RFCPDM = Cost addition for refurbishing for tritium-phase operations, $ million

Table 75. Additional data inputs

```
640  ***** instrumentation and control input data
641  *&iacin
642  iddph=1, idtph=1, cexp=0.6, notm=6, idfalt=0
643  noph=1, 2, 2, 2, 1, 2, 2, 0, 1, 3, 25
644  nodp=2, 1, 1, 1, 1, 2, 1, 2, 2, 2, 32
645  notp=0, 0, 0, 1, 0, 0, 0, 2, 1, 1, 32
646  tmcpdm=1.5, 1.3, 1.5, 0.7, 0.4, 0.3, 0.7, 0.8, 0.7, 0.4, 0.1
647  rfcpdm=0.2, 0.2, 0.4, 0.3, 0.1, 0.1, 0.2, 0.2, 0.1, 0.1, 0.0
648  *&endiacin
```

exponent CEXP defined previously, the number of test modules, NOTM, and logic data for integral variables IDDPH, ITDPH, and IDFALT. If IDDPH and ITDPH are set to 0, the code uses the hydrogen phase data and output messages. If IDDPH = 1 and ITDPH = 0, the code makes calculations and outputs summary data for operation through both the hydrogen and deuterium phases. If IDDPH = 1 and ITDPH = 1, the code makes calculations and outputs summary data for all three phases of operation. If IDFALT = 0, the code uses the default table data, and if IDFALT = 1, the code uses the input data provided by the user.

CODE OUTPUT DATA

Several examples of the code output are given in Tables 76, 77, and 78. The tables are nearly self-descriptive. At the top of the tables are the process SCDS cost estimate for each of the eleven groups defined in Table 72 and the total cost of all eleven groups. In the middle of each table, both diagnostic input data and the computed cost estimate data are given. The total costs by line and by column are given, together with a message that identifies the source of the diagnostic input data. The archiving computer data cost estimates are then given below the diagnostic output data. Finally, the summary of the cost for the three major groups is given and the total overall cost. A message at the top of the summary table indicates whether the cost estimate is through the hydrogen, deuterium, and tritium operating phases. The output data table uniquely defines the diagnostic table input data and the extent of the summary cost estimate so that the user can quickly determine whether an error in data entry was made.

PRINCIPAL IAC CODE EQUATIONS

The system code IAC consists of two major divisions: (1) the process supervisory control and instrumentation and (2) the plasma diagnositcs instrumentation. The first division contains eleven major groups of process I&C, and the second division contains ten major diagnostics groups. The following equations are used to compute the data associated with each group of I&C.

Table 76. IAC subroutine output table using the default table (through deuterium phase)

COST OF THE CONTROL BUILDING I&C HARDWARE AND SOFTWARE,
AND THE COST OF THE PLASMA DIAGNOSTICS.

(SCDS--SUPERVISORY CONTROL AND DATA SYSTEM.)

PROCESS SCDS COST ESTIMATE

TCOFPH-PLASMA HEATING SCDS COST, $M	2.69
TCOFMC-MAGNET SYSTEMS SCDS COST, $M	2.47
TCOFAC-AC POWER SYSTEMS SCDS COST, $M	1.03
TCGNES-POWER GEN.& ENERGY STORAGE SCDS COST, $M	1.31
TCOFRC-REACTOR COMP. & STRUCTURES I&C COST,$M	2.75
TCOFCV-CRYOGENIC & VACUUM SYSTEMS SCDS COST, $M	1.18
TCOFFS-FUELING & PROCESSING SCDS COST, $M	0.56
TCOFHT-HEAT TRANSPORT SYSTEMS SCDS COST, $M	1.14
TCOFMN-FACILITY & SITE MON. SCDS COST, $M	0.31
TCOFBF-BUILDING FACILITIES I&C COST, $M	0.73
TCOFRH-REMOTE HANDLING SYS. SCDS COST, $M	1.61
TCOPSC-TOTAL COST OF PROCESS SCDS , $M	15.78

PLASMA DIAGNOSTICS COST ESTIMATE TABLE

NOHP-NO. OF DIAGNOSTIC TYPES IN GROUP K FOR THE H2 PHASE
NODP-NO. OF DIAGNOSTIC TYPES IN GRP K ADDED FOR THE D2 PHASE
NOTP-NO. OF DIAGNOSTIC TYPES IN GRP K ADDED FOR THE TD PHASE
TMCPDM-AVERAGE COST OF A DIAGNOSTIC TYPE IN GROUP K, $M
HPDGCM-COST OF DIAGNOSTICS IN GROUP K FOR THE H2 PHASE
DPDGCM-COST OF DIAGNOSTICS IN GRP K ADDED FOR THE D2 PHASE
TPDGCM-COST OF DIAGNOSTICS IN GRP K ADDED FOR THE TD PHASE
FPRODPAR-FUSION PRODUCT PARTICLE DIAGNOSTICS GROUP

K	DIAG.GRP	NOHP	NODP	NOTP	TMCPDM	HPDGCM	DPDGCM	TPDGCM	TOTAL
1	EDENSITY	1	2	0	1.50	1.50	3.00	0.20	4.50
2	E.TEMP	2	1	0	1.30	2.60	1.30	0.20	3.90
3	ION TEMP	2	2	0	1.50	3.00	3.00	0.40	6.00
4	IMPURITY	3	2	1	0.70	2.10	1.40	1.00	3.50
5	PWR LOSS	1	1	1	0.40	0.40	0.40	0.50	0.80
6	MAGNETIC	3	1	1	0.30	0.90	0.30	0.40	1.20
7	P.INSTAB	2	1	0	0.70	1.40	0.70	0.20	2.10
8	FPRODPAR	0	2	2	0.80	0.00	1.60	1.80	1.60
9	ENVIRON	3	2	1	0.70	2.10	1.40	0.80	3.50
10	MISCEL	4	2	3	0.40	1.60	0.80	1.30	2.40
	TOTAL COST OF DIAGNOSTICS FOR EACH PHASE USING THE DEFAULT INPUT TABLE.					15.60	13.90	6.80	29.50

ARCHIVING COMPUTER HARDWARE AND SOFTWARE

HYDROGEN PHASE ARCHIVING,	$M	2.30
DEUTERIUM PHASE ARCHIVING,	$M	2.80
TRITIUM PHASE ARCHIVING,	$M	3.20

TOTAL SCDS & PLASMA DIAGNOSTICS COST SUMMARY
(THROUGH THE DEUTERIUM PHASE)

TCOPSC-TOTAL COST OF PROCESS SCDS COST,	$M	15.78
TCOPDG-TOTAL COST OF PLASMA DIAGNOSTICS,	$M	29.50
TCARCH-TOTAL COST OF ARCHIVING & PROCESSING,	$M	8.30
TCSCDG-TOTAL COST OF DIAGNOSTICS & SCDS,	$M	53.58

Table 77. IAC subroutine output with default input table

```
3          COST OF THE CONTROL BUILDING I&C HARDWARE AND SOFTWARE,
4          AND THE COST OF THE PLASMA DIAGNOSTICS.
5
6                (SCDS--SUPERVISORY CONTROL AND DATA SYSTEM.)
7
8                        PROCESS SCDS COST ESTIMATE
9
10         TCOFPH-PLASMA HEATING SCDS COST, $M                        2.69
11         TCOFMC-MAGNET SYSTEMS SCDS COST, $M                        2.47
12         TCOFAC-AC POWER SYSTEMS SCDS COST, $M                      1.03
13         TCGNES-POWER GEN.& ENERGY STORAGE SCDS COST, $M            1.31
14         TCOFRC-REACTOR COMP. & STRUCTURES I&C COST,$M              2.75
15         TCOFCV-CRYOGENIC & VACUUM SYSTEMS SCDS COST, $M            1.18
16         TCOFFS-FUELING & PROCESSING SCDS COST, $M                  2.45
17         TCOFHT-HEAT TRANSPORT SYSTEMS SCDS COST, $M                1.14
18         TCOFMN-FACILITY & SITE MON. SCDS COST, $M                  0.77
19         TCOFBF-BUILDING FACILITIES I&C COST, $M                    0.73
20         TCOFRH-REMOTE HANDLING SYS. SCDS COST, $M                  3.21
21
22         TCOPSC-TOTAL COST OF PROCESS SCDS , $M                    19.73
23
24
25                     PLASMA DIAGNOSTICS COST ESTIMATE TABLE
26
27         NOHP-NO. OF DIAGNOSTIC TYPES IN GROUP K  FOR THE H2 PHASE
28         NODP-NO. OF DIAGNOSTIC TYPES IN GRP K ADDED FOR THE D2 PHASE
29         NOTP-NO. OF DIAGNOSTIC TYPES IN GRP K ADDED FOR THE TD PHASE
30         TMCPDM-AVERAGE COST OF A DIAGNOSTIC TYPE IN GROUP K, $M
31         HPDGCM-COST OF DIAGNOSTICS IN GROUP K FOR THE H2 PHASE
32         DPDGCM-COST OF DIAGNOSTICS IN GRP K ADDED FOR THE D2 PHASE
33         TPDGCM-COST OF DIAGNOSTICS IN GRP K ADDED FOR THE TD PHASE
34         FPRODPAR-FUSION PRODUCT PARTICLE DIAGNOSTICS GROUP
35
36   K DIAG.GRP   NOHP   NODP   NOTP   TMCPDM   HPDGCM   DPDGCM   TPDGCM   TOTAL
37
38   1 EDENSITY    1      2      0      1.50     1.50     3.00     0.20     4.70
39   2 E.TEMP      2      1      0      1.30     2.60     1.30     0.20     4.10
40   3 ION TEMP    2      2      0      1.50     3.00     3.00     0.40     6.40
41   4 IMPURITY    3      2      1      0.70     2.10     1.40     1.00     4.50
42   5 PWR LOSS    1      1      1      0.40     0.40     0.40     0.50     1.30
43   6 MAGNETIC    3      1      1      0.30     0.90     0.30     0.40     1.60
44   7 P.INSTAB    2      1      0      0.70     1.40     0.70     0.20     2.30
45   8 FPRODPAR    0      2      2      0.80     0.00     1.60     1.80     3.40
46   9 ENVIRON     3      2      1      0.70     2.10     1.40     0.80     4.30
47  10 MISCEL      4      2      3      0.40     1.60     0.80     1.30     3.70
48
49     TOTAL COST OF DIAGNOSTICS FOR EACH     15.60    13.90     6.80    36.30
50     PHASE USING THE DEFAULT INPUT TABLE.
51
52
53                     ARCHIVING COMPUTER HARDWARE AND SOFTWARE
54
55         HYDROGEN PHASE ARCHIVING,                    $M          2.30
56         DEUTERIUM PHASE ARCHIVING,                   $M          2.80
57         TRITIUM PHASE ARCHIVING,                     $M          3.20
58
59
60               TOTAL SCDS & PLASMA DIAGNOSTICS COST SUMMARY
61                     (THROUGH THE TRITIUM PHASE)
62
63         TCOPSC-TOTAL COST OF PROCESS SCDS COST,      $M         19.73
64         TCOPDG-TOTAL COST OF PLASMA DIAGNOSTICS,     $M         36.30

65         TCARCH-TOTAL COST OF ARCHIVING & PROCESSING,$M           8.30
66
67         TCSCDG-TOTAL COST OF DIAGNOSTICS & SCDS,     $M         64.33
```

Table 78. IAC subroutine with user-input table

```
3          COST OF THE CONTROL BUILDING I&C HARDWARE AND SOFTWARE,
4          AND THE COST OF THE PLASMA DIAGNOSTICS.
5
6                 (SCDS--SUPERVISORY CONTROL AND DATA SYSTEM.)
7
8                       PROCESS SCDS COST ESTIMATE
9
10         TCOFPH-PLASMA HEATING SCDS COST, $M                      2.69
11         TCOFMC-MAGNET SYSTEMS SCDS COST, $M                      2.47
12         TCOFAC-AC POWER SYSTEMS SCDS COST, $M                    1.03
13         TCGNES-POWER GEN.& ENERGY STORAGE SCDS COST, $M          1.31
14         TCOFRC-REACTOR COMP. & STRUCTURES I&C COST,$M            2.75
15         TCOFCV-CRYOGENIC & VACUUM SYSTEMS SCDS COST, $M          1.18
16         TCOFFS-FUELING & PROCESSING SCDS COST, $M                2.45
17         TCOFHT-HEAT TRANSPORT SYSTEMS SCDS COST, $M              1.14
18         TCOFMN-FACILITY & SITE MON. SCDS COST, $M                0.77
19         TCOFBF-BUILDING FACILITIES I&C COST, $M                  0.73
20         TCOFRH-REMOTE HANDLING SYS. SCDS COST, $M                3.21
21
22         TCOPSC-TOTAL COST OF PROCESS SCDS , $M                  19.73
23
24
25                 PLASMA DIAGNOSTICS COST ESTIMATE TABLE
26
27         NOHP-NO. OF DIAGNOSTIC TYPES IN GROUP K  FOR THE H2 PHASE
28         NODP-NO. OF DIAGNOSTIC TYPES IN GRP K ADDED FOR THE D2 PHASE
29         NOTP-NO. OF DIAGNOSTIC TYPES IN GRP K ADDED FOR THE TD PHASE
30         TMCPDM-AVERAGE COST OF A DIAGNOSTIC TYPE IN GROUP K, $M
31         HPDGCM-COST OF DIAGNOSTICS IN GROUP K FOR THE H2 PHASE
32         DPDGCM-COST OF DIAGNOSTICS IN GRP K ADDED FOR THE D2 PHASE
33         TPDGCM-COST OF DIAGNOSTICS IN GRP K ADDED FOR THE TD PHASE
34         FPRODPAR-FUSION PRODUCT PARTICLE DIAGNOSTICS GROUP
35
36   K DIAG.GRP   NOHP  NODP  NOTP  TMCPDM   HPDGCM   DPDGCM   TPDGCM   TOTAL
37
38   1 EDENSITY    1     2     0     1.50     1.50     3.00     0.20     4.70
39   2 E.TEMP      2     1     0     1.30     2.60     1.30     0.20     4.10
40   3 ION TEMP    2     1     0     1.50     3.00     1.50     0.40     4.90
41   4 IMPURITY    2     1     1     0.70     1.40     0.70     1.00     3.10
42   5 PWR LOSS    1     1     0     0.40     0.40     0.40     0.10     0.90
43   6 MAGNETIC    2     2     0     0.30     0.60     0.60     0.10     1.30
44   7 P.INSTAB    2     1     0     0.70     1.40     0.70     0.20     2.30
45   8 FPRODPAR    0     2     2     0.80     0.00     1.60     1.80     3.40
46   9 ENVIRON     1     2     1     0.70     0.70     1.40     0.80     2.90
47  10 MISCEL      3     2     1     0.40     1.20     0.80     0.50     2.50
48
49     TOTAL COST OF DIAGNOSTICS FOR EACH     12.80    12.00     5.30    30.10
50     PHASE USING THE USER DIAGNOSTICS INPUT TABLE.
51
52
53                 ARCHIVING COMPUTER HARDWARE AND SOFTWARE
54
55         HYDROGEN PHASE ARCHIVING,                    $M          2.50
56         DEUTERIUM PHASE ARCHIVING,                   $M          3.20
57         TRITIUM PHASE ARCHIVING,                     $M          3.20
58
59
60               TOTAL SCDS & PLASMA DIAGNOSTICS COST SUMMARY
61                     (THROUGH THE TRITIUM PHASE)
62
63         TCOPSC-TOTAL COST OF PROCESS SCDS COST,      $M         19.73
64         TCOPDG-TOTAL COST OF PLASMA DIAGNOSTICS,     $M         30.10
65         TCARCH-TOTAL COST OF ARCHIVING & PROCESSING,$M          8.90
66
67         TCSCDG-TOTAL COST OF DIAGNOSTICS & SCDS,     $M        58.73
```

Process Supervisory Control I&C Division (SCDS)

Group 1. Plasma heating control building equipment cost (TCOFPH) of both neutral beam and rf SCDS:

$TCOFPH = CBENB\ (TCOFNB)^{cexp} + CBERF\ (RFD)^{cexp}$, \$ million

(cexp is a cost exponent = 0.6) ,

$CBENB = 1.0/(16.0)^{cexp}$,

$CBERF = 1.0/(40.0)^{cexp}$,

TCOFNB is the total cost of the NBI system, \$ million ,

RFD is the total cost of the rf systems, \$ million .

Group 2. Magnet systems control building equipment cost (TCOFMC) of both the TF and PF coil systems SCDS:

$TCOFMC = CBETF\ (CTFPCT)^{cexp} + CBEPF\ (TCOST)^{cexp}$, \$ million

$CBETF = 1.0/(15.0)^{cexp}$,

$CBEPF = 1.0/(10.0)^{cexp}$,

CTFPCT is the total cost of the TF coil power conversion system ,

TCOST is the total cost of the PF coil power conversion system, \$ million .

Group 3. AC power distribution system SCDS cost (TCOFAC):

$TCOFAC = CBEPPS(CPACPM)^{cexp} + CBEFPS(CFACPM)^{cexp}$
$+ CBELVS(CLVDSM)^{cexp}$, \$ million ,

$CBEPPS = 1.0/(30.0)^{cexp}$,

$CBEFPS = 1.0/(30.0)^{cexp}$,

$CBELVS = 1.0/(50.0)^{cexp}$,

CPACPM is the total cost of the pulsed ac power system, \$ million ,

CFACPM is the total cost of the facility ac power system, \$ million ,

CLVDSM is the total cost of the low-voltage power distribution, \$ million .

Group 4. Power generation and energy storage SCDS cost (TCGNES):

$TCGNES = CBEPGE\ (CPGESM)^{cexp}$,

$CBEPGE = 1.0/(20.0)^{cexp}$,

CPGESM = C2DGM + C4NBPM + C1TGM + ES ,

C2DGM is the cost of two diesel generator systems ,
C4NBPM is the cost of 4 no-break (uninterruptible) power supplies ,
CITGM is the cost of a steam-turbine generator ,
ES is the cost of MGF energy storage systems .

Group 5. Reactor components and structures I&C cost (TFOFRC):

$TCOFRC = CPTMOD\ (NOTM)^{cexp} + CBERCS\ (TFNO)^{cexp}$,
$CBERCS = 1.0/(3.0)^{cexp}$,
$CPTMOD = 1.0/(5.0)^{cexp}$,
NOTM = number of test modules ,
TFNO = number of TF coils ,
cexp = cost exponent = 0.6 .

Group 6. Cryogenics and vacuum system SCDS cost (TCOFCV):

$TCOFCV = CBECRY(TCCRYO)^{cexp} + CBEVAC(TOVX6)^{cexp}$,
$CBECRY = 1.0/(10.0)^{cexp}$,
$CBEVAC = 1.0/(10.0)^{cexp}$,
TCCRYO is the total cost of the cryogen system ,
TOVX6 is the total cost of the vacuum system .

In Groups 7, 9, and 11 and in "Plasma Diagnostics Instrumentation" below, the following options are available:

1. Hydrogen phase operation; IDDPH = 0, IDTPH = 0 ,
2. Deuterium phase operation; IDDPH = 1, IDTPH = 0 ,
3. Tritium phase operation; IDDPH = 1, IDTPH = 1 .

Instrumentation is added in three phases. If the user is interested only in hydrogen phase I&C, enter the data in 1 above. If the user is interested in I&C through the deuterium phase, enter the data in 2 above. If the user wants the I&C cost through the tritium phase, enter the data in 3 above.

Group 7. Fueling and fuel processing systems SCDS cost (TCOFFS):

$TCOFFS = CBEFS\ (CFUELS)^{cexp} + CBEFPS(CTSC/1E+6)^{cexp}$,

$CBEFS = 1.0/(8.0)^{cexp}$,

$CBEFPS = 1.0(IDTPH)/(2.0)^{cexp}$,

CFUELS is the total cost of the fuel injection system ,

CTSC is the cost of tritium processing I&C .

Group 8. Heat transport systems SCDS cost (TCOFHT):

$TCOFHT = CBEHTS(CHTS)^{cexp}$,

$CBEHTS = 1.0/(20.0)^{cexp}$,

CHTS is the total cost of the heat transfer system .

Group 9. Facility and site effluent monitoring (TCOFMN):

CINMON = cost of monitoring nonradioactive effluents such as helium, deuterium, and liquid metal leakage, $ million ,

CRADMN = cost of monitoring radioactive effluents such as tritium, contaminated coolants, and radwaste materials, $ million ,

$CBERMN = 1.0/(5.0)^{cexp}$,

$CRADMN = [0.1 + CBERMN(CTMON/1E6)]^{cexp}\ [0.2(IDDPH) + 0.8\ (IDTPH)]$,

$CINMON = 0.2\ (EFLOOR/1.0E5)^{cexp}$,

$TCOFMN = CINMON + CRADMN$,

$cexp = 0.6$,

CTMON is the cost of tritium process monitoring, $ million ,

EFLOOR is the total floor area of the site building, m^2 .

Group 10. Building facilities I&C cost (TCOFBF):

$CBEBFA = 1/(200.0)^{cexp}$,

$TCOFBF = CBEBFA(TBCOST)^{cexp}$,

TBCOST is the cost of buildings excluding site preparation, $ million .

Group 11. Remote handling console SCDS cost (TCOFRH):

$CBERH = 1.0/(4.0)^{cexp}$,

$TCOFRH = CBERH(CMTOT)^{cexp}\ (1.0 + IDDPH + 2IDTPH)/4$,

CMTOTM is the remote handling equipment cost, $ million .

Total process I&C cost, TCOPSC, $ million:

$$TCOPSC = TCOFPH + TCOFMC + TCOFAC + TCOFRC + TCOFCV + TCOFFS + TCOFHT + TCOFMN + TCOFBF + TCOFRH + TCGNES \ .$$

Plasma Diagnostics Instrumentation (Group 12)

Under Group 12 there are 10 major categories or types of diagnostics grouped like they were for TFTR. The number of diagnostics in each group for the hydrogen phase, deuterium phase, and tritium phase may be selected by the user and entered into a table named IACDAT, or the user may elect use default table IDEFDT and DEFDAT that define the number of diagnostics and cost data for each phase of operation. If the user table is desired, set DEFALT = 1, and if the default table is desired, set DEFALT = 0.

The formats of the user and default diagnostic tables are identical. Table 75 shows the format of the table with the DEFAULT table data entries. The user can change any or all of these numbers in the user's table IACDAT, including the cost per diagnostic TMCPDM in column 5 and the cost of refurbishing for the tritium phase operations, RFCPDM, in column 6 of Table 74.

The pertinent equations for determining the cost of the diagnostics are given below. Equations are for group (K), where k = 1 through 10, corresponding to the 10 groups of Table 73.

Cost of group (k):

For the hydrogen phase, HPDGCM, $ million ,

$HPDGCM = NOHP\ (k)\ [TMCPDM\ (k)]$, $ million .

For the deuterium phase, DPDGCM, $ million ,

DPDGCM = NODP (k) [TMCPDM (k)] .

For the tritium phase, TPDGSM, $ million ,

TPDGCM = NOTP (k) [TMCPDM (k)] + RFCPDM (k) .

Total cost of diagnostic group (k) through a user-selected phase, SUM, $ million:

SUM = HPDGCM + DPDGCM (IDDPH) + TPDGCM (IDTPH) .

If user wants cost through the hydrogen phase, IDDPH = IDTPH = 0 .

If user wants cost through the deuterium phase, IDDPH = 1, IDTPH = 0 .

If user wants cost through the tritium phase, IDDPH = 1, IDTPH = 1 .

Cost of all diagnostics for the hydrogen phase operation, SHDGCM ,

SHDGCM = SHDGCM + HPDGCM , $ million .

Cost of all diagnostics for the deuterium phase operation, SDDGCM ,

SDDGCM = SDDGCM + DPDGCM , $ million .

Cost of all diagnostics for the tritium phase operation, STDGCM ,

STDGCM = STDGCM + TPDGCM , $ million .

Total cost of all diagnostics through a user-selected phase, TCOPDG, $ million:

TCOPDG = SHDGCM + SDDGCM (IDDPH) + STDGCM (ITDGCM) .

Archiving computer cost TCARCH, $ million (k = 11):

HPARCM = HPDGCM (11) ,

DPARCM = APDGCM (11) ,

TPARCM = TPDGCM (11) ,

TCARCH = HPARCM + DPARCH + TPARCH , $ million .

Total I&C cost, TCSCDG, $ million:

TCSDG = TCOPSC + TCOPDG + TCARCH , $ million .

IAC CODE FLOW DIAGRAM

Figures 104 and 105 are IAC code flow diagrams. With reference to Fig.104, the user-input data and the data from other code files are read into the IAC code to perform the process instrumentation and control calculations. Next, the data from the user's file or the default table are read into the code depending on whether table selector IDFALT is set equal to 1 or 0, respectively. The process I&C calculations are then performed and the pertinent data are printed into the upper part of the output table, as shown in Tables 76, 77, and 78.

DO loop calculations are then performed using the selected diagnostic table and the Group 12 equations given above. Referring to Fig.105, the diagnostic table selector IDFALT is used to print the pertinent alphanumeric output under the process I&C table described above. Then, the computer archiving and summary calculations are performed and printed out. The format of the summary output depends on whether the user elects to print the output through the hydrogen phase (IDDPH = IDTPH = 0), through the deuterium phase (IDDPH = 1, IDTPH = 0), or through the tritium phase (IDDPH = 1, IDTPH = 1). The decision mnemonic is LPHASE = IDDPH + IDTPH - 1.

IAC CODE FORTRAN LISTING

The FORTRAN listing identifies most of the code mnemonics used in code IAC. Data files used are defined at the beginning; then the input data and their sources are listed. The process I&C calculations for each of the eleven groups are then performed and printed out. Next, the DO loop calculations are performed for each diagnostic group and are printed out. Finally, the archiving computer and cost summary calculations are performed and printed out. The IAC code flowchart of Figs. 104 and 105 and the FORTRAN listing have a one-to-one correlation of the operating sequence.

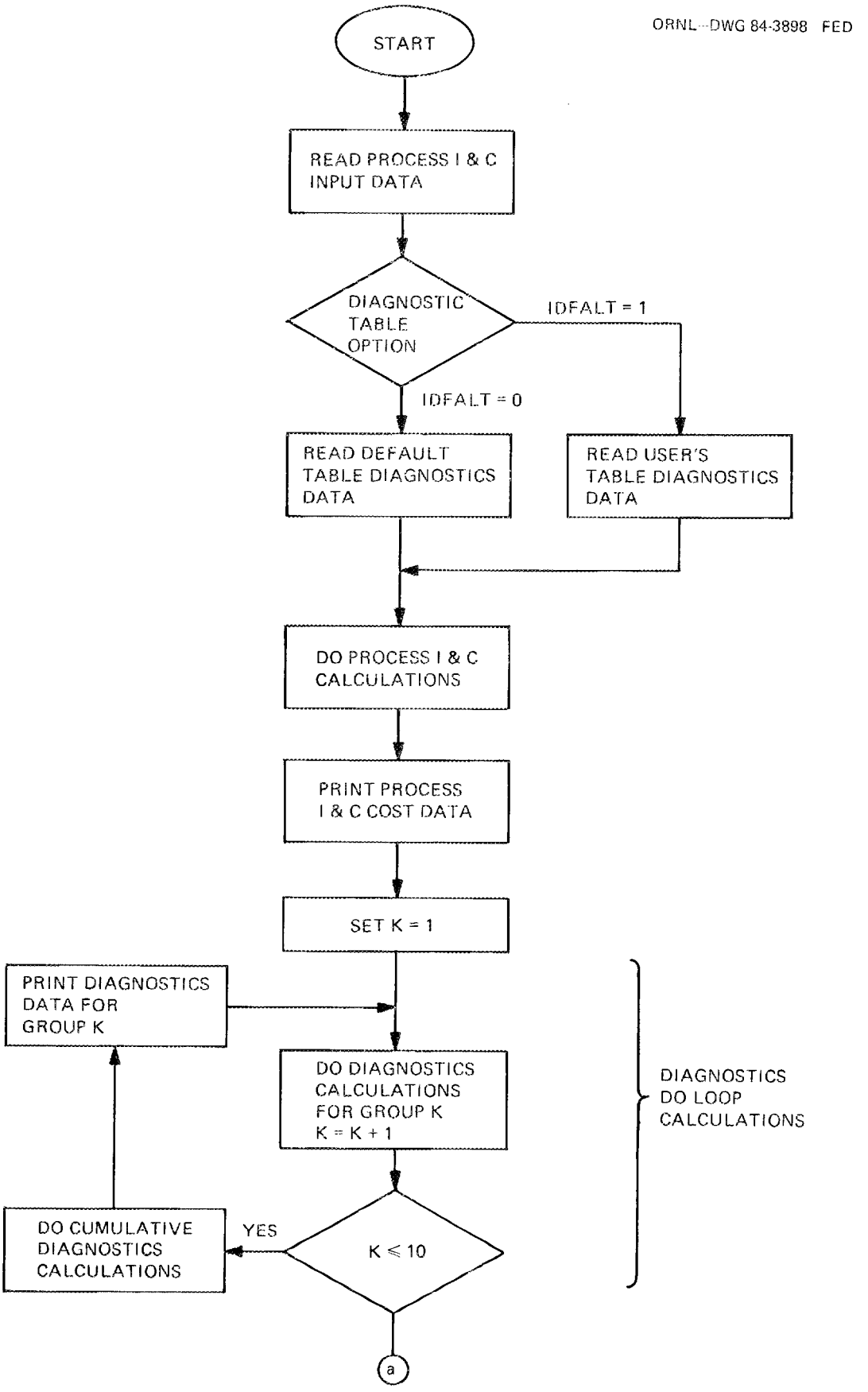

Fig. 104. IAC code flow diagram (1 of 2 pages).

ORNL–DWG 84-3899 FED

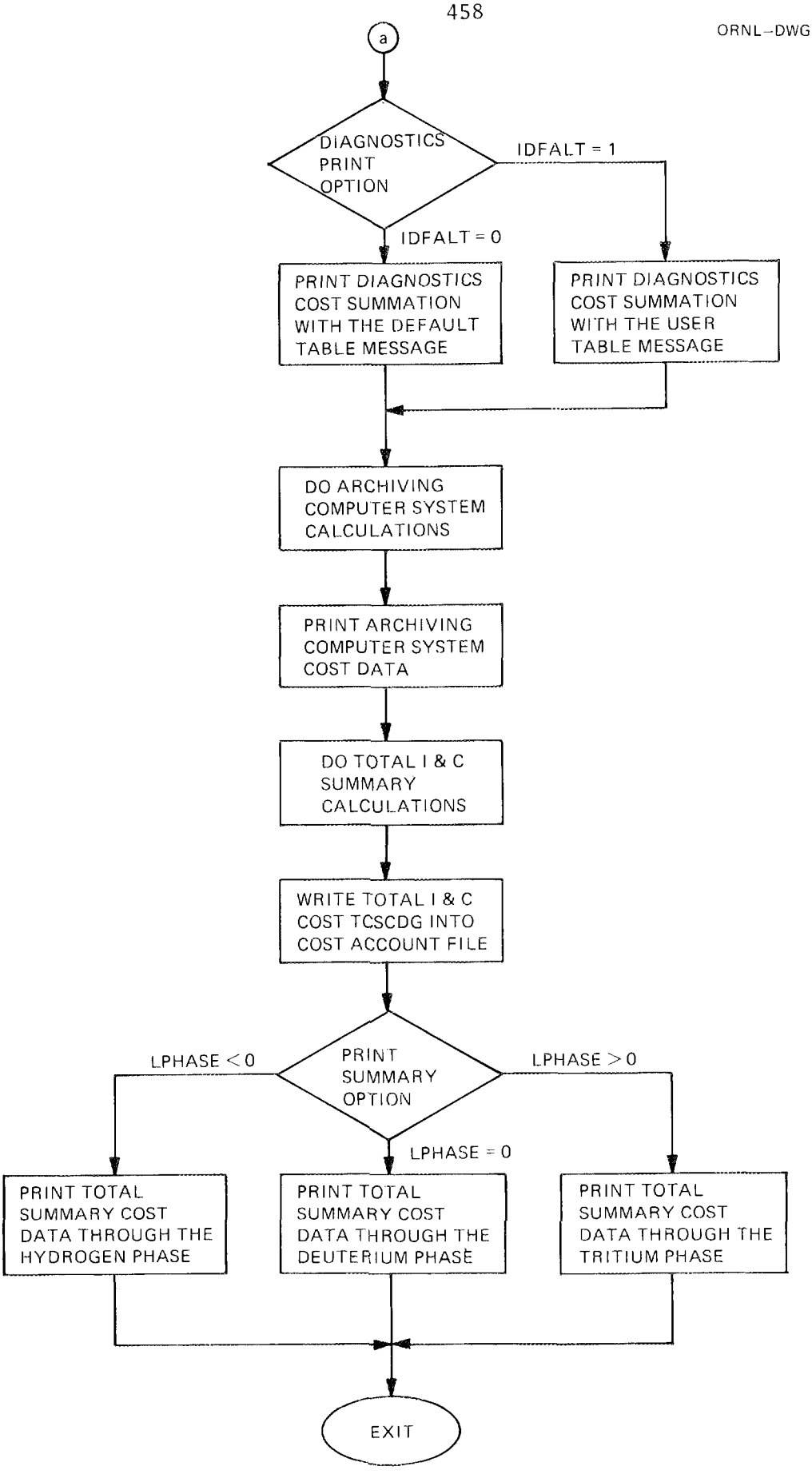

Fig. 105. IAC code flow diagram (2 of 2 pages).

19. MAINTENANCE EQUIPMENT MODULE

SUMMARY AND BACKGROUND

The maintenance equipment module is a compilation of equipment which is used for contact and remote maintenance operations. Modifying the use of this module for different tokamak configurations is accomplished by changing the input data, either by adjusting the equipment unit costs, or by changing the required number of equipment units needed in the reactor building and hot cell. The module output consists of a listing of 30 equipment items, their unit cost, the required number for the reactor and the hot cell, and the total cost for each. Of the 30 items, 4 are variable according to algorithms which depend upon configuration geometry or size/weight parameters of device components. In addition, the subtotal for the reactor building and hot cell equipment costs are shown, along with a total for all equipment costs.

Presently, the maintenance equipment module assumes singular replacement operations. An example of this is the scheduled removal of limiter blades which could be done as a parallel operation. Only one limiter blade-handling device is listed. Clearly, these components can be replaced as multiple, parallel operations. The degree of parallelism is directly related to device availability, and this has not yet been factored into the systems code.

The requirements for duplicate equipment needed for the mockup facility also have not yet been included but are planned for as a future addition. A preliminary listing of this equipment includes many of the items from the output plus the mockup, which is generally considered to be one-quarter of the device. A preliminary list of these items includes

- CCTV, cell lighting, and audio systems;
- welder-cutters;
- manipulator systems;
- reduced-capacity cranes; and
- one-quarter of the device, including appropriate subsystems mockups.

This listing does not include transporter and handling equipment, since it is presently assumed that the actual reactor building equipment will be used. This assumption is based on being able to decontaminate the equipment as required and that the equipment will not experience neutron activation.

Other future additions to this module will be made in an effort to more accurately portray the costs which are associated with maintenance operations. Among these are

1. Equipment requirements for radiation monitoring. Many of these will be stationed around the device to monitor the environment for neutrons during device operation, gamma radiation, and tritium levels. Others will be remotely installed prior to permitting personnel access.
2. In-vessel inspection system. One or more such systems will be required to evaluate the plasma chamber for wear or damage prior to starting in-vessel related maintenance operations. Data for these will be taken from the experience of the Joint European Torus (JET) and TFTR, as well as conceptual designs developed at the FEDC.
3. Machine tools in the hot cell and maintenance repair shop. A number of machine tools in the form of lathes, mills, grinders, and inspection tools, to name a few, will be required in the hot cell and in the "cold" maintenance shop. Those used in the hot cell will be designed with special features for remote operation and maintenance.

ASSUMPTIONS

The cost data generated in the maintenance equipment module are primarily based on data taken from the conceptual design report for the Hot Experimental Facility (HEF).[1] The HEF is an all-remote fuel reprocessing facility design which was completed in 1980. All remote maintenance system costs were escalated to 1983 dollars.

MODULE INPUT

The key input items are the unit equipment costs and the quantity required. Virtually all of these are provided by the user. Among the list of 30 items, 4 will interact with other modules to determine the weight of a component, such as the torus sector, or to determine the geometry of the facility layout. Tables 79 and 80 show sample input and output data files, respectively.

GOVERNING EQUATIONS

Four items have algorithms which depend upon component weights or facility geometry. A brief description for each of these follows.

1. The sector handling device is a function of the weight of a sector module and is scaled from work done for the FED design:

$$\$(K) = \frac{2}{3}\,(FWSWTCR) + UCSMHD \quad ,$$

where FWSWTCR = weight of sector (TONNE).

2. The periscope systems are a function of the number of hot cells, assuming one for each cell, and six for the reactor building:

$$\$(K) = (6 + NWS) \times UCPERS \quad ,$$

where NWS = number of hot cells work stations ($\geqslant$10).

3. The shielded windows are based on locating one window for every 20 m of wall length:

$$NRSWIN = [2 \times REB(1) + 2 \times REB(2)]/20 \quad ,$$

$$NHSWIN = NWS + 4 \quad ,$$

$$REB(1) = \text{reactor building length} \quad ,$$

$$REB(2) = \text{reactor building width} \quad ,$$

$$\$(K) = UCSWIN(NRSWIN + NHSWIN) \quad .$$

Table 79. Maintenance equipment input data

```
*****************************************************************
***** maintenane equipment input data
*  The variables for the different types of equipment have the form
*  nhxxxx, nrxxxx, and ucxxxx where xxxx is the 4 digit equipment
*  descripter as follows.
*  nh prefix = number required in hot cell facility
*  nr prefix = number required in reactor building
*  uc prefix = unit cost (K$)
*  ih prefix = option control for calulation of nhxxxx
*  ir prefix = option control for calulation of nrxxxx
*  cctv =  closed circuit tv
*  clit =  cell lighting and audio sys.
*  tloc =  transfer lock
*  dewa =  decontamination and waste handling
*  pct2 =  welder-cutter; pipes < 2 in.
*  pct6 =  welder-cutter; pipes 2 - 6 in.
*  pctl =  welder-cutter; pipes > 6 in.
*  eeff =  end effectors
*  smhd =  sector module handling device
*  scut =  welder-cutter; structures and vacuum joints
*  tran =  transporter
*  subh =  subcomponent handling device
*  limh =  limiter blade handling device
*  movm =  movable manipulator sys.
*  invm =  in-vessel manipulator sys.
*  lift =  lifting fixtures, slings, etc.
*  hant =  hand tools
*  ldsy =  leak detection sys.
*  pers =  periscope, liner, and shield
*  swin =  shielded window
*  crcc =  cranes 1ØØ - 5ØØ to2Øes
*  crØØ =  cranes 5Ø tonnes
*  crØØ =  cranes 1Ø tonnes
*  crØ5 =  cranes 5 tonnes
*  crØ1 =  cranes 1 tonne
*  powa =  power arm manipulator (bridge mounted)
*  mecm =  mechanical msm (thru-the-wall)
*  mecb =  mechanical msm (bridge mounted)
*  roba =  robot arm (floor mounted)
*  splg =  shield plugs
*****************************************************************
*&meqin1
  uccctv=24.2  nrcctv=6  nhcctv=1Ø
  ucclit=435.6  nrclit=1  nhclit=1
  uctloc=1452.Ø  nrtloc=1  nhtloc=Ø
  ucdewa=363Ø.Ø  nrdewa=Ø  nhdewa=1
  ucpct2=6Ø.5  nrpct2=2  nhpct2=2
  ucpct6=9Ø.8  nrpct6=2  nhpct6=2
  ucpctl=151.3  nrpctl=2  nhpctl=2
  uceeff=6Ø5.Ø  nreeff=1  nheeff=1
  ucsmhd=526.9  nrsmhd=1  nhsmhd=Ø irsmhd="*" ihsmhd="*"
  ucscut=6Ø5.  nrscut=1  nhscut=Ø
  uctran=242.Ø  nrtran=1  nhtran=Ø
  ucsubh=421.3  nrsubh=1  nhsubh=Ø
  uclimh=543.4  nrlimh=1  nhlimh=Ø
  ucmovm=121Ø.Ø  nrmovm=1  nhmovm=Ø
  ucinvm=121Ø.Ø  nrinvm=1  nhinvm=Ø
  uclift=3Ø2.5  nrlift=3  nhlift=1
  uchant=6Ø5.Ø  nrhant=1  nhhant=Ø
  ucldsy=121Ø.  nrldsy=1  nhldsy=Ø
  ucpers=17Ø.6  nrpers=6  ihpers="*"
*&endmeqin1
```

Table 79 (continued)

```
*&meqin2
  ucswin=292.8  irswin="*"  ihswin="*"
  uccrcc=121Ø.  nrcrcc=1  nhcrcc=1
  uccr5Ø=968.Ø  nrcr5Ø=1  nhcr5Ø=Ø
  uccr1Ø=186.3  nrcr1Ø=Ø  ihcr1Ø="*"
  uccrØ5=121.Ø  nrcrØ5=Ø  nhcrØ5=Ø
  uccrØ1=54.5  nrcrØ1=Ø  nhcrØ1=Ø
  ucpowa=5Ø5.8  nrpowa=1  nhpowa=1
  ucmecm=121.Ø  nrmecm=2  ihmecm="*"
  ucmecb=937.8  nrmecb=1  nhmecb=1
  ucroba=121.Ø  nrroba=Ø  nhroba=1
  ucsplg=6Ø5.Ø  nrsplg=1  nhsplg=Ø
*&endmeqin
```

Table 80. Sample output

********** meatyp **********

Maintenance equipment costs

item description	unit cost K$	number for reactor bldg.	number for hot cell facility	total cost K$
closed circuit tv	24.20	6	10	387.20
cell lighting and audio sys.	435.60	1	1	871.20
transfer lock	1452.00	1	0	1452.00
decontamination and waste handling	3630.00	0	1	3630.00
welder-cutter; pipes < 2 in.	60.50	2	2	242.00
welder-cutter; pipes 2 - 6 in.	90.80	2	2	363.20
welder-cutter; pipes > 6 in.	151.30	2	2	605.20
end effectors	605.00	1	1	1210.00
sector module handling device	526.90	1*	0*	526.90
welder-cutter; structures and vacuum joints	605.00	1	0	605.00
transporter	242.00	1	0	242.00
subcomponent handling device	421.30	1	0	421.30
limiter blade handling device	543.40	1	0	543.40
movable manipulator sys.	1210.00	1	0	1210.00
in-vessel manipulator sys.	1210.00	1	0	1210.00
lifting fixtures, slings, etc.	302.50	3	1	1210.00
hand tools	605.00	1	0	605.00
leak detection sys.	1210.00	1	0	1210.00
periscope, liner, and shield	170.60	6	16*	3753.20

Table 80 (continued)

shielded window	292.80	10*	14*	7027.20
cranes 100 - 500 tonnes	1210.00	1	1	5508.16
cranes 50 tonnes	968.00	1	0	968.00
cranes 10 tonnes	186.30	0	10*	1863.00
cranes 5 tonnes	121.00	0	0	0.00
cranes 1 tonne	54.50	0	0	0.00
power arm manipulator (bridge mounted)	505.80	1	1	1011.60
mechanical msm (thru-the-wall)	121.00	2	20*	2662.00
mechanical msm (bridge mounted)	937.80	1	1	1875.60
robot arm (floor mounted)	121.00	0	1	121.00
shield plugs	605.00	1	0	605.00

reactor building maintenance equip. costs	20688.38	
hot cell facility maintenance equip. costs	21250.78	
TOTAL MAINTENANCE EQUIP. COSTS		41939.16

* - indicates that these items depend on device and plant parameters calculated by the program. All other items are taken directly from input.

NRSWIN and NHSWIN must be even numbers; therefore, round down if calculated value is odd.

4. The overhead crane is a function of the weight of the heaviest device component. The slope of the cost equation is based on costs used for a 100-tonne and a 500-tonne system for the FED design:

$$\$(K) = (NRCRCC + NHCRCC)(UCCRCC)(WTCR/200 + 0.5) \quad ,$$

where WTCR = largest weight (TONNE) considering TF coil, PF coil, OH solenoid, cryostat dome, and torus sector, and NRCRCC and NHCRCC are the number of cranes in the reactor cell and hot cell, respectively. UCCRCC is the unit cost of the crane.

REFERENCE

1. Bechtel National, Inc. and Union Carbide Corp. — Nuclear Division, *Conceptual Design Report Hot Experimental Facility Oak Ridge, Tennessee*, ORNL/CFRP-81/4, vols. 2 and 5, Oak Ridge Natl. Lab., June 1981.

20. COST MODULE

The cost module collects and sums the costs consistent with a standard code of accounts suggested in PNL-2648, *Fusion Reactor Design Studies — Standard Accounts for Cost Estimates.*[1] This standard code of accounts is shown in Table 81. In many cases, the systems code does not cost items down to the fourth subsystem level allowed by the code of accounts, in which case the cost for a component is entered into the table in a slot at a higher system level. Table 82 lists the sample output for the cost module that is currently being used.

ASSUMPTIONS AND CONSTRAINTS

1. Cost accounts for each subsystem of a fusion reactor have been assigned an eight-digit number consistent with those included in ref. 1. If additional account numbers are needed, they must be coded into the file COSTACT. Account numbers cannot be created by a user operating on the input data file of the systems code.
2. The cost routine tracks capital cost only; operating costs are not accounted for.

MODULE INPUT

Input to the cost accounts is generated throughout the systems code. The data are entered into the cost accounts in the modules where the cost information is generated. There is no direct user input; all data flow in from other parts of the systems code.

GOVERNING EQUATIONS

This module collects cost data under standard account numbers, sums the data to ever-increasing levels of hierarchy, and finally prints the cost file. The equation involved simply manipulates the cost data input from each module.

Table 81. Standard code of accounts

```
20010000     land & privilege acquisition
20020000     relocation of buildings, utilities, highways, etc.
20000000. land & land rights
21010100       general yard improvements
21010200       waterfront improvements
21010300       transportation access (off site)
21010000.    site improvements & facilities
21020100       basic building structures
21020200       building services
21020300       containment structures
21020400       hot cell facility
21020000.    reactor building
21030100       basic building structures
21030200       building services
21030000.    turbine building
21040100       intake structures
21040200       discharge structures
21040300       unpressurized intake & discharge conduits
21040400       recirculating structures
21040500       cooling tower systems
21040000.    cooling system structures
21050101        tf coil elect. equip. bldg.
21050102        ohmic heating and cryo pf coil elect.equip. bldg.
21050103        bulk heat elect. equip. bldg.
21050104        motor-generator-flywheel bldg.
21050100       basic building structures
21050200       building services
21050000.    power supply & energy storage building
21060101          cryogenic refrigeration bldg.
21060102          tritium processing bldg.
21060103          ventilation bldg.
21060100       reactor auxiliaries building(incl. switchgear bay)
21060200       radioactive waste building
21060300       tritium processing building
21060400       control room building
21060500       diesel generator building
21060600       administration building
21060701          shop and mockup bldg.
21060700       service building
21060800       helium storage building
21060900       miscellaneous structures & building work
21060000.    miscellaneous buildings
21070000,    ventilation stack
21980000,    spare parts allowance
21990000,    contingency allowance
21000000. structures & site facilities
22010101         breeding material(incl. tritium breeding)
22010102         first wall & structural material
22010103         attenuators, reflectors, & multipliers
22010104         wall modifiers(coatings, liners, limiters, etc.)
22010105         others
22010100.      blanket & first wall
22010201         primary
22010202         secondary
22010200.      shield
22010301         toroidal field magnets with case
22010302         copper insert magnets with case
22010303         poloidal field magnets with case
22010304         intercoil structure
22010300.      magnets
22010401         beam heating(neutral, ion or electron)
22010402         rf heating
22010403         laser heating
22010404         other heating systems
```

Table 81 (continued)

```
22010400.     supplemental heating systems
22010501        reactor structure
22010502        equipment support structure
22010500.     primary structure & support
22010601        plasma chamber vacuum(incl. pumps/comp./pipe)
22010602        magnet dewar vacuum(incl. pumps/comp./pipe)
22010603        supplemental heating vacuum(incl. pumps/comp./pipe)
22010604        direct convertor vacuum(incl. pumps/comp./pipe)
22010605        reactor vacuum system(low grade)
22010606        reactor vacuum wall
22010607        shielded vacuum ducts
22010600.     reactor vacuum systems(unless integral elsewhere)
22010701        heating
22010702        confinement
22010703        control system
22010704        central energy storage
22010705        other
22010700.     power supply, switching & energy storage
22010800,     impurity control
22010901        vacuum tank
22010902        direct convertor modules
22010903        thermal panels
22010904        power conditioning equipment
22010900.     direct energy conversion system
22010000.   reactor equipment
22020101        pumps & motor drives(modular & nonmodular)
22020102        piping
22020103        heat exchangers
22020104        tanks(incl. dump,make-up,clean-up,trit.,hot storage)
22020105        clean-up system
22020106        thermal insulation, piping & equipment
22020107        tritium extraction
22020100.     primary coolant system
22020201        pumps & motor drives(modular & nonmodular)
22020202        piping
22020203        heat exchangers
22020204        tanks(incl. dump,make-up,clean-up,trit.,hot storage)
22020205        clean-up system
22020206        thermal insulation, piping & equipment
22020207        tritium extraction
22020200.     intermediate coolant system
22020000.   main heat transfer & transport systems
22030101        refrigeration
22030102        piping
22030103        fluid circulation driving system
22030104        tanks
22030105        purification
22030100.     magnet cooling system
22030201        refrigeration
22030202        piping
22030203        fluid circulation driving system
22030204        tanks
22030205        purification
22030200.     shield & structure cooling system
22030301        refrigeration
22030302        piping
22030303        fluid circulation driving system
22030304        tanks
22030305        purification
22030300.     supplemental heating system cooling system
22030401        refrigeration
22030402        piping
22030403        fluid circulation driving system
22030404        tanks
```

Table 81 (continued)

```
22030405        purification
22030400.     power supply cooling system
22030500,     other cooling systems
22030000.   auxiliary cooling systems
22040100      liquid waste processing & equipment
22040200      gaseous wastes & off-gas processing system
22040300      solid waste processing equipment
22040000.   radioactive waste treatment & disposal
22050100      tritium processing systems
22050200      tritium processing cleanup systems
22050300      tritium monitors and controls
22050400      tritium pellet injection
22050500      air detritiation systems
22050000.   tritium processing and storage systems
22060101        blanket & coil maintenance equipment
22060102        components rotated into service to allow maint.
22060103        other maintenance equipment
22060100.     maintenance equipment
22060200      special heating systems(start-up,trace, etc.)
22060300      coolant receiving, storage & make-up systems
22060400      gas systems
22060500      building vacuum systems
22060000.   other reactor plant equipment
22070100      reactor i&c equipment(burn control, diagnostics, etc.)
22070200      radiation monitoring systems
22070300      isolated indicating & recording gauges, etc.
22070000.   instrumentation & control(i&c)
22980000,   spare parts allowance
22990000,   contingency allowance
22000000. reactor plant equipment
23010100      turbine-generators & accessories
23010200      foundations
23010300      standby exciters
23010400      lubricating system
23010500      gas systems
23010600      reheaters
23010700      shielding
23010800      weather-proof housing
23010000.   turbine-generators
23020000,   main steam (or other fluid) system
23030100      water intake common facilities
23030200      circulating water systems
23030300      cooling towers
23030400      other systems which reject heat to the atmosphere
23030000.   heat rejection systems
23040100      condensers
23040200      condensate system
23040300      gas removal system
23040400      turbine by-pass systems(excl. piping)
23040000.   condensing systems
23050100      regenerators & recuporators
23050200      pumps
23050300      tanks
23050000.   feed heating system
23060100      turbine auxiliaries
23060200      auxiliaries cooling system(excl. piping)
23060300      make-up treatment system(excl. piping)
23060400      chemical treatment & condensate purification systems
23060500      central lubrication service system(excl. piping)
23060000.   other turbine plant equipment
23070000,   instrumentation & control(i&c) equipment
23980000,   spare parts allowance
23990000,   contingency allowance
23000000. turbine plant equipment
```

Table 81 (continued)

24010100	generator circuits
24010200	station service
24010000.	switchgear
24020100	station service & startup transformers
24020200	low voltage unit substation & lighting transformers
24020300	battery system
24020400	diesel engine generators
24020500	gas turbine generators
24020600	motor generator sets
24020000.	station service equipment
24030100	main control board for electric system
24030200	auxiliary power & signal boards
24030000.	switchboards (incl. heat tracing)
24040100	gen. station grounding system & cathodic protection
24040000.	protective equipment
24050100	concrete cable tunnels, trenches & envelopes
24050200	cable trays & support
24050300	conduit
24050400	other structures
24050000.	electrical structures & wiring containers
24060100	generator circuits wiring
24060200	station service power wiring
24060300	control wiring
24060400	instrument wiring
24060500	containment penetrations
24060000.	power & control wiring
24070100	reactor building lighting
24070200	turbine building lighting
24070300	reactor auxiliaries building lighting
24070400	radioactive waste building lighting
24070500	tritium processing building lighting
24070600	miscellaneous buildings lighting
24070700	yard lighting
24070000.	electrical lighting
24980000,	spare parts allowance
24990000,	contingency allowance
24000000.	electric plant equipment
25010100	cranes, hoists, monorails, & conveyors
25010200	railway
25010300	roadway equipment
25010400	watercraft
25010500	vehicle maintenance equipment
25010000.	transportation & lifting equipment
25020100	air systems(excl. piping)
25020200	water systems(excl. piping)
25020300	auxiliary heating boilers(excl. piping)
25020000.	air & water service systems
25030100	local communications systems
25030200	signal systems
25030000.	communications equipment
25040100	safety equipment
25040200	shop, laboratory, & test equipment
25040300	office equipment & furnishings
25040400	change room equipment
25040500	environmental monitoring equipment
25040600	dining facilities
25040000.	furnishings & fixtures
25980000,	spare parts allowance
25990000,	contingency allowance
25000000.	miscellaneous plant equipment
26010000	reactor coolant
26020000	intermediate coolant
26030000	turbine cycle working fluids
26040000	other materials

Table 81 (continued)

```
26980000     spare parts allowance
26990000     contingency allowance
26000000. special materials
90000000.total reactor direct capital cost
91010000     temporary facilities
91020000     construction equipment
91030000     construction services
91000000. construction facilities, equipment & services (15%)
92000000, engineering & construction management services (15%)
93010000     taxes & insurance
93020000     staff training & plant startup
93030000     owner's g&a
93000000. other costs (5%)
94000000, interest during 10 year construction (10% /yr. = 644%)
95000000, escalation during 10 year construction (5% /yr. = 338%)
99000000.total reactor capital cost
end
```

Table 82. Sample output

c a p i t a l c o s t a c c o u n t s

09/11/84 [05:14:54]

account #	title	cost (million dollars)	
20010000	land & privilege acquisition	0.00	
20020000	relocation of buildings, utilities, highways, etc.	0.00	
20000000	land & land rights		0.00

c a p i t a l c o s t a c c o u n t s

09/11/84 [05:14:56]

account #	title	cost (million dollars)	
21010100	general yard improvements	0.00	
21010200	waterfront improvements	0.00	
21010300	transportation access (off site)	0.00	
21010000	site improvements & facilities		12.30

Table 82 (continued)

21020100	basic building structures		49.29		
21020200	buildings services		0.00		
21020300	containment structures		0.00		
21020400	hot cell facility		34.54		
21020000	reactor building			83.83	
21030100	basic building structures		0.00		
21030200	buildings services		0.00		
21030000	turbine building			0.00	
21040100	intake structures		0.11		
21040200	discharge structures		0.00		
21040300	unpressurized intake & discharge conduits		0.50		
21040400	recirculating structures		0.54		
21040500	cooling tower systems		0.00		
21040000	cooling system structures			1.15	
21050101	tf coil elect. equip. blds.	0.12			
21050102	ohmic heating and cryo pf coil elect.equip. blds.	5.52			
21050103	bulk heat elect. equip. blds.	0.33			
21050104	motor-generator-flywheel blds.	1.47			
21050100	basic building structures		7.44		
21050200	buildings services		0.00		
21050000	power supply & energy storage building			7.44	
21060101	cryogenic refrigeration blds.	0.96			
21060102	tritium processing blds.	14.09			
21060103	ventilation blds.	11.75			
21060100	reactor auxiliaries building(incl. switchgear bay)		26.80		
21060200	radioactive waste building		4.32		
21060300	tritium processing building		0.00		
21060400	control room building		0.00		
21060500	diesel generator building		0.41		
21060600	administration building		4.32		
21060701	shop and mockup blds.	15.18			
21060700	service building		15.18		
21060800	helium storage building		0.00		
21060900	miscellaneous structures & building work		0.00		
21060000	miscellaneous buildings			51.03	
21070000	ventilation stack			2.00	
21980000	spare parts allowance			0.00	
21990000	contingency allowance			0.00	
21000000	structures & site facilities				157.75

c a p i t a l c o s t a c c o u n t s

09/11/84 [05:14:57]

Table 82 (continued)

account #	title	cost (million dollars)		
22010101	breeding material(incl. tritium breeding)	0.00		
22010102	first wall & structural material	5.94		
22010103	attenuators, reflectors, & multipliers	0.00		
22010104	wall modifiers(coatings, liners, limiters, etc.)	2.69		
22010105	others	0.00		
22010100	blanket & first wall		8.63	
22010201	primary	0.00		
22010202	secondary	0.00		
22010200	shield		130.44	
22010301	toroidal field magnets with case	163.41		
22010302	copper insert magnets with case	0.00		
22010303	poloidal field magnets with case	79.31		
22010304	intercoil structure	17.82		
22010300	magnets		260.54	
22010401	beam heating(neutral, ion or electron)	0.00		
22010402	rf heating	70.67		
22010403	laser heating	0.00		
22010404	other heating systems	0.00		
22010400	supplemental heating systems		70.67	
22010501	reactor structure	6.54		
22010502	equipment support structure	0.00		
22010500	primary structure & support		6.54	
22010601	plasma chamber vacuum(incl. pumps/comp./pipe)	13.82		
22010602	magnet dewar vacuum(incl. pumps/comp./pipe)	0.00		
22010603	supplemental heating vacuum(incl. pumps/comp./pipe)	0.00		
22010604	direct convertor vacuum(incl. pumps/comp./pipe)	0.00		
22010605	reactor vacuum system(low grade)	0.00		
22010606	reactor vacuum wall	19.28		
22010607	shielded vacuum ducts	26.40		
22010600	reactor vacuum systems(unless integral elsewhere)		59.50	
22010701	heating	0.00		
22010702	confinement	60.11		
22010703	control system	0.00		
22010704	central energy storage	27.06		
22010705	other	6.22		
22010700	power supply, switching & energy storage		93.39	
22010800	impurity control		0.00	
22010901	vacuum tank	0.00		
22010902	direct convertor modules	0.00		
22010903	thermal panels	0.00		
22010904	power conditioning equipment	0.00		
22010900	direct energy conversion system		0.00	
22010000	reactor equipment			629.71
22020101	pumps & motor drives(modular & nonmodular)	0.00		
22020102	piping	0.00		
22020103	heat exchangers	0.00		
22020104	tanks(incl. dump,make-up,clean-up,trit.,hot storage)	0.00		
22020105	clean-up system	0.00		
22020106	thermal insulation, piping & equipment	0.00		
22020107	tritium extraction	0.00		
22020100	primary coolant system		0.00	
22020201	pumps & motor drives(modular & nonmodular)	0.00		
22020202	piping	0.00		

Table 82 (continued)

22020203	heat exchangers	0.00			
22020204	tanks(incl. dump,make-up,clean-up,trit.,hot storage)	0.00			
22020205	clean-up system	0.00			
22020206	thermal insulation, piping & equipment	0.00			
22020207	tritium extraction	0.00			
22020200	intermediate coolant system		0.00		
22020000	main heat transfer & transport systems			0.00	
22030101	refrigeration	0.00			
22030102	piping	0.00			
22030103	fluid circulation driving system	0.00			
22030104	tanks	0.00			
22030105	purification	0.00			
22030100	magnet cooling system		0.00		
22030201	refrigeration	0.00			
22030202	piping	0.00			
22030203	fluid circulation driving system	0.00			
22030204	tanks	0.00			
22030205	purification	0.00			
22030200	shield & structure cooling system		0.00		
22030301	refrigeration	0.00			
22030302	piping	0.00			
22030303	fluid circulation driving system	0.00			
22030304	tanks	0.00			
22030305	purification	0.00			
22030300	supplemental heating system cooling system		0.00		
22030401	refrigeration	0.00			
22030402	piping	0.00			
22030403	fluid circulation driving system	0.00			
22030404	tanks	0.00			
22030405	purification	0.00			
22030400	power supply cooling system		0.00		
22030500	other cooling systems		0.00		
22030000	auxiliary cooling systems			41.24	
22040100	liquid waste processing & equipment		0.00		
22040200	gaseous wastes & off-gas processing system		0.00		
22040300	solid waste processing equipment		0.00		
22040000	radioactive waste treatment & disposal			0.00	
22050100	tritium processing systems		13.52		
22050200	tritium processing cleanup systems		6.90		
22050300	tritium monitors and controls		9.42		
22050400	tritium pellet injection		2.81		
22050500	air detritiation systems		37.82		
22050000	tritium processing and storage systems			70.47	
22060101	blanket & coil maintenance equipment	0.00			
22060102	components rotated into service to allow maint.	0.00			
22060103	other maintenance equipment	0.00			
22060100	maintenance equipment		41.94		
22060200	special heating systems(start-up,trace, etc.)		0.00		
22060300	coolant receiving, storage & make-up systems		0.00		
22060400	gas systems		0.00		
22060500	building vacuum systems		0.00		
22060000	other reactor plant equipment			41.94	
22070100	reactor i&c equipment(burn control, diagnostics, etc.)		0.00		
22070200	radiation monitoring systems		0.00		
22070300	isolated indicating & recording gauges, etc.		0.00		
22070000	instrumentation & control(i&c)			65.52	
22980000	spare parts allowance			0.00	
22990000	contingency allowance			0.00	
22000000	reactor plant equipment				848.88

Table 82 (continued)

c a p i t a l c o s t a c c o u n t s

09/11/84 [05:15:02]

account #	title	cost (million dollars)
23000000	turbine plant equipment	0.00

c a p i t a l c o s t a c c o u n t s

09/11/84 [05:15:03]

account #	title	cost (million dollars)
24000000	electric plant equipment	15.56

c a p i t a l c o s t a c c o u n t s

09/11/84 [05:15:04]

90000000	total reactor direct capital cost	1022.19

REFERENCE

1. S. C. Schulte, T. L. Wilke, and J. R. Young, *Fusion Reactor Design Studies — Standard Accounts for Cost Estimates*, PNL-2648, Pacific Northwest Laboratories, May 1978.

ORNL/FEDC-84/9
Dist. Category UC-20 c,d

INTERNAL DISTRIBUTION

1. S. E. Attenberger
2. R. J. Barrett
3. G. Bronner
4. T. G. Brown
5. R. J. Colchin
6. B. A. Cramer
7. R. A. Dory
8. J. L. Dunlap
9. C. A. Flanagan
10. S. K. Ghose
11. J. C. Glowineka
12. G. E. Gorker
13. J. Haines
14. M. R. Hall
15. R. J. Hooper
16. S. S. Kalsi
17. J. Kamperschroer
18. D. H. Metzler
19. J. R. Mihalczo
20. W. D. Nelson
21. Y-K. M. Peng
22. S. K. Borowski
23–27. R. L. Reid
28. K. E. Rothe
29. M. J. Saltmarsh
30–34. T. E. Shannon
35. J. Sheffield
36. P. T. Spampinato
37. D. A. Spong
38. V. C. Srivastava
39. L. Stewart
40. D. J. Strickler
41. T. Uckan
42. K. F. Wu
43. J. Kyle Johnson
44–45. Laboratory Records Department
46. Laboratory Records, ORNL-RC
47. Central Research Library
48. Document Reference Section
49. Fusion Energy Division Library
50. Fusion Energy Division Publications Office
51. ORNL Patent Office

EXTERNAL DISTRIBUTION

52. M. A. Abdou, School of Chemical, Nuclear, and Thermal Engineering, Boelter Hall, University of California, Los Angeles, CA 90024
53. C. C. Baker, FPP/208, Argonne National Laboratory, 9700 South Cass Avenue, Argonne, IL 60439
54. R. Botwin, C47-05, Grumman Aerospace Corporation, P.O. Box 31, Bethpage, NY 11714
55. J. D. Callen, Department of Nuclear Engineering, University of Wisconsin, Madison, WI 53706
56. D. R. Cohn, MIT Plasma Fusion Center, 167 Albany Street, Cambridge, MA 02139
57. R. W. Conn, Department of Chemical, Nuclear, and Thermal Engineering, Boelter Hall, University of California, Los Angeles, CA 90024
58. J. G. Crocker, EG&G Idaho, P.O. Box 1625, Idaho Falls, ID 83401
59. G. R. Dalton, Department of Nuclear Engineering Science, Nuclear Science Center, University of Florida, Gainesville, FL 32611
60. R. C. Davidson, Massachusetts Institute of Technology, 77 Massachusetts Avenue, Cambridge, MA 02139
61. N. A. Davies, Office of Fusion Energy, Office of Energy Research, Mail Station G-256, U.S. Department of Energy, Washington, DC 20545

62. S. O. Dean, Director, Fusion Energy Development, Science Applications, Inc., 2 Professional Drive, Suite 249, Gaithersburg, MD 20760
63. D. DeFreece, E451, Building 81/1/B7, McDonnell Douglas Astronautics Company, P.O. Box 516, St. Louis, MO 63166
64. H. Dreicer, Division Leader, CRT, Los Alamos National Laboratory, P.O. Box 1663, Los Alamos, NM 87545

65–66. P. A. Finn, Fusion Program, Argonne National Laboratory, 9700 South Cass Avenue, Argonne, IL 60439

67. H. K. Forsen, Bechtel Group, Inc., Research & Engineering, P.O. Box 3965, San Francisco, CA 94119
68. H. P. Furth, Director, Princeton Plasma Physics Laboratory, P.O. Box 451, Princeton, NJ 08544
69. G. Gibson, Westinghouse Electric Corporation, Advanced Energy Systems Division, P.O. Box 158, Madison, PA 15663
70. J. R. Gilleland, Manager, Fusion Project, GA Technologies, Inc., P.O. Box 81608, San Diego, CA 92138
71. M. Y. Gohar, Argonne National Laboratory, 9700 South Cass Avenue, Argonne, IL 60439
72. R. W. Gould, Department of Applied Physics, California Institute of Technology, Pasadena, CA 91125
73. R. A. Gross, Plasma Research Laboratory, Columbia University, New York, NY 10027
74. C. D. Henning, Lawrence Livermore National Laboratory, P.O. Box 808, Livermore, CA 94550
75. R. A. Krakowsi, CTR-12, Mail Stop 641, Los Alamos National Laboratory, P.O. Box 1663, Los Alamos, NM 87545
76. G. L. Kulcinski, University of Wisconsin, Department of Nuclear Engineering, Engineering Research Building, Room 439, 1500 Johnson Drive, Madison, WI 53706
77. B. G. Logan, Lawrence Livermore National Laboratory, P.O. Box 808, Livermore, CA 94550
78. D. M. Meade, Plasma Physics Laboratory, Princeton University, P.O. Box 451, Princeton, NJ 08544
79. A. T. Mense, Building 107, Post B2, McDonnell Douglas Astronautics Company, P.O. Box 516, St. Louis, MO 63166
80. R. W. Moir, Lawrence Livermore National Laboratory, P.O. Box 808, Livermore, CA 94550
81. D. B. Montgomery, MIT Plasma Fusion Center, 167 Albany Street, Cambridge, MA 02139
82. A. Opdenaker, Reactor Systems and Applications Branch, Office of Fusion Energy, Department of Energy, Mail Stop G256, Washington, DC 20545
83. L. J. Perkins, Lawrence Livermore National Laboratory, P.O. Box 808, Livermore, CA 94550
84. J. M. Rawls, GA Technologies, Inc., P.O. Box 81608, San Diego, CA 92138
85. P. J. Reardon, Brookhaven National Laboratory, Upton, NY 11973
86. M. Roberts, Office of Fusion Energy, U.S. Mail Stop G-256, Department of Energy, Washington, DC 20545
87. J. D. Rogers, Los Alamos National Laboratory, P.O. Box 1663, Los Alamos, NM 87545
88. M. L. Rogers, Monsanto Research Corporation, Mound Laboratory Facility, P.O. Box 32, Miamisburg, OH 45342
89. P. H. Rutherford, Princeton Plasma Physics Laboratory, P.O. Box 451, Princeton, NJ 08544
90. J. A. Schmidt, Princeton Plasma Physics Laboratory, P.O. Box 451, Princeton, NJ 08544
91. J. Schultz, MIT Plasma Fusion Center, 167 Albany Street, Cambridge, MA 02139
92. G. Sheffield, Princeton Plasma Physics Laboratory, P.O. Box 451, Princeton, NJ 08544

93. D. Smith, Materials Science Division, Argonne National Laboratory, 9700 South Cass Avenue, Argonne, IL 60439
94. L. Southworth, GA Technologies, Inc., P.O. Box 81608, San Diego, CA 92138
95. W. M. Stacey, Jr., Georgia Institute of Technology, School of Nuclear Engineering, Atlanta, GA 30332
96. D. Steiner, Rensselaer Polytechnic Institute, Troy, NY 12181
97. P. M. Stone, Office of Fusion Energy, Office of Energy Research, Mail Station G-256, U.S. Department of Energy, Washington, DC 20545
98. R. J. Thome, Francis Bitter National Magnet Laboratory, 170 Albany Street, Cambridge, MA 02139
99. R. Varma, Physical Research Laboratory, Navangpura, Ahmedabad, India
100. Bibliothek, Max-Planck-Institut fur Plasmaphysik, D-8046 Garching bei Munchen, Federal Republic of Germany
101. Bibliothek, Institut fur Plasmaphysik, KFA, Postfach 1913, D-5170 Julich, Federal Republic of Germany
102. Bibliotheque, Service du Confinement des Plasmas, CEA, B.P. No. 6, 92 Fontenay-aux-Roses (Seine), France
103. Documentation S.I.G.N., Department de la Physique du Plasma et de la Fusion Controlee, Association EURATOM-CEA, Centre d'Etudes Nucleaires, B.P. 85, Centre du Tri, 38041 Grenoble, Cedex, France
104. Library, Centre de Recherches en Physique des Plasmas, 21 Avenue des Bains, 1007 Lausanne, Switzerland
105. Library, Culham Laboratory, UKAEA, Abingdon, Oxfordshire, OX14 3DB, England
106. Library, FOM Instituut voor Plasma-Fysica, Rijnhuizen, Jutphaas, Netherlands
107. Library, Institute of Physics, Academia Sinica, Beijing, Peoples Republic of China
108. Library, Institute for Plasma Physics, Nagoya University, Nagoya 464, Japan
109. Library, International Centre for Theoretical Physics, Trieste, Italy
110. Library, JET Joint Undertaking, Abingdon, Oxfordshire, OX14 3DB, England
111. Library, Laboratorio Gas Ionizzati, Frascati, Italy
112. Plasma Research Laboratory, Australian National Laboratory, P.O. Box 4, Canberra, ACT 2000, Australia
113. Thermonuclear Library, Japan Atomic Energy Research Institute, Tokai, Naka, Ibaraki, Japan
114. Library, Plasma Physics Laboratory, Kyoto University, Gokasho Uji, Kyoto, Japan
115. Office of the Assistant Manager for Energy Research and Development, Department of Energy, Oak Ridge Operations, Oak Ridge, TN 37830

116–305. Given distribution as shown in TID-4500, Magnetic Fusion Energy (Distribution Category UC-20 c,d: Reactor Materials and Fusion Systems)