LOCKHEED MARTIN ENERGY RESEARCH LIBRARIES

3 4456 0452317 5

ORNL/CON-41

ornl

OAK
RIDGE
NATIONAL
LABORATORY

UNION
CARBIDE

Energy and the Laundry Process

W. P. Levins

OAK RIDGE NATIONAL LABORATORY
CENTRAL RESEARCH LIBRARY
CIRCULATION SECTION
4500N ROOM 175
LIBRARY LOAN COPY
DO NOT TRANSFER TO ANOTHER PERSON
If you wish someone else to see this report, send in name with report and the library will arrange a loan.
UCN-7969 3 9-77

OPERATED BY
UNION CARBIDE CORPORATION
FOR THE UNITED STATES
DEPARTMENT OF ENERGY

Printed in the United States of America. Available from
National Technical Information Service
U.S. Department of Commerce
5285 Port Royal Road, Springfield, Virginia 22161
NTIS price codes—Printed Copy: A05 Microfiche A01

This report was prepared as an account of work sponsored by an agency of the United States Government. Neither the United States Government nor any agency thereof, nor any of their employees, makes any warranty, express or implied, or assumes any legal liability or responsibility for the accuracy, completeness, or usefulness of any information, apparatus, product, or process disclosed, or represents that its use would not infringe privately owned rights. Reference herein to any specific commercial product, process, or service by trade name, trademark, manufacturer, or otherwise, does not necessarily constitute or imply its endorsement, recommendation, or favoring by the United States Government or any agency thereof. The views and opinions of authors expressed herein do not necessarily state or reflect those of the United States Government or any agency thereof.

ORNL/CON-41

Contract No. W-7405-eng-26

ENERGY AND THE LAUNDRY PROCESS

by

W. P. Levins

Energy Division

Date Published: April 1980

Department of Energy
Division of Buildings and Community Systems

OAK RIDGE NATIONAL LABORATORY
Oak Ridge, Tennessee 37830
operated by
UNION CARBIDE CORPORATION
for the
DEPARTMENT OF ENERGY

LOCKHEED MARTIN ENERGY RESEARCH LIBRARIES

3 4456 0452317 5

TABLE OF CONTENTS

ABSTRACT 1

1. SUMMARY 1

2. INTRODUCTION 3

3. THE AUTOMATIC WASHING MACHINE 9
   3.1 Energy Consumption 9
   3.2 The Cleaning Process 19
      3.2.1 Soiling agents 19
      3.2.2 Water 20
      3.2.3 Fabrics and finishes 20
   3.3 Detergents 21
      3.3.1 Detergents and phosphates 23
      3.3.2 Cold water detergents 24
      3.3.3 Detergents and germs 24
   3.4 Economics of the Wash Cycle 25
   3.5 The Rinse Cycle 30
   3.6 The Extraction Process 31

4. THE CLOTHES DRYER 33
   4.1 Energy Consumption 33
   4.2 Cycle Termination Controls 37
   4.3 Effect of Dryers on House Heating and Cooling Systems . . . 38
   4.4 Dryer Exhaust Utilization 39

5. ALTERNATE METHODS OF CLEANING AND DRYING 41

6. CONCLUSIONS AND RECOMMENDATIONS 43

REFERENCES 47

APPENDIX - Reference Information and Sample Calculations 49

ENERGY AND THE LAUNDRY PROCESS

W. P. Levins
Energy Division

ABSTRACT

This report discusses energy usage in the residential laundry process. It analyzes the various parts of the washing and drying cycles and identifies areas where energy is being wasted or where its usage can be optimized. The application of R&D to these areas will result in energy savings. The report is centered on standard and large-size automatic washers and dryers, as compact, portable, and manual models comprise a small part of the market. However, the principles discussed apply to them also.

Data from many sources were used to compile this report. Most sources show very good general agreement so far as energy consumption and usage patterns are concerned.

The results of this study suggest that improved and/or integrated controls utilizing modern electronics can indeed help conserve energy. A better understanding by the consumer of the factors involved in the laundry process can also lead to the purchase and wise use of that laundry equipment which best suits the individual needs.

---

1. SUMMARY

The laundry process consumed approximately 9.1% (1.5×10^{15} Btu, or 1.6×10^{18} J) of the annual energy used in the household (16.5×10^{15} Btu, or 17.4×10^{18} J) and 1.9% of the total annual United States primary energy consumption of 78×10^{15} Btu (82.3×10^{18} J) in 1978. Initial efforts at reducing this consumption should be aimed at reducing the amount of hot water used in the washing machine. Hot water currently accounts for about 96% of the energy entering the washing machine and 67% of the primary energy of the laundry process.

The warm water rinse option should be removed from all washing machines. This has the potential to save 1.66×10^{14} Btu/hr (1.75×10^{17} J) or 11.1% of the primary energy used in the residential laundry process.

More accurate water-level controls and their proper use would help reduce hot water consumption in the washer. A built-in laundry-weighing scale coupled to an accurate water-level control would remove the human element from setting the level control and ensure that water was not being wasted. An annual primary energy savings of 3.7×10^{13} Btu (3.9×10^{16} J) or 2.5% of the total laundry consumption is possible.

Increased chemical action (more detergent) and increased mechanical action (longer wash cycles) can be substituted for thermal energy (hot water) and produce equally clean laundry with a savings in both energy and money for the user. An integrated circuit chip programmed with the proper information and interfaced with a built-in laundry-weighing scale coupled to an accurate water-level control has the potential to optimize the wash cycle and save both energy and money. User input via push buttons could tell the "smart" control the type of fabric being washed and its degree of soil.

Improved dryer cycle-termination controls which will operate with accuracy and precision over a broad range of dryer loadings would ensure that the laundry was not being overdried.

An outside-vented dryer located in the heated portion of a house has very little effect on the heating systems of most houses during the heating season. The effect of the outside-vented dryer on the house infiltration rate is minimal.

A heat exchanger to preheat indoor house air as it enters the dryer with sensible heat from the dryer exhaust can increase the dryer efficiency by 5%.

It appears that increased efficiency in the motors used to operate washers and dryers offers break-even economics over the life of the appliances. Implementing higher efficiency motors will not be spontaneous within the industry.

Standing pilots should be removed from all gas dryers and replaced with intermittent ignition devices. Forty percent of the gas consumed by a gas dryer with a standing pilot is used by the pilot.

2. INTRODUCTION

The laundry process is familiar to most Americans, so much so that each Monday is often referred to as "wash day." We can all easily relate to laundry, yet few of us really understand or appreciate what is involved in the equipment and chemicals used, the cleaning and drying processes, and the energy requirements to accomplish these tasks.

This study was conducted to determine where and how much energy is being used in the several phases of washing and drying cycles and also to point out those areas where energy is either being wasted or not being used optimally. Source material from the open literature was supplemented with test data and personal contacts to supply basic information. The study suggests methods to reduce energy consumption in several areas. Further R&D in these areas may provide other energy-conserving solutions.

The laundry equipment industry is very cost competitive and, as a result, has produced some reliable, well-engineered equipment at reasonable cost to the consumer. Any changes to present-day laundry equipment will have to be both reliable and cost effective.

Figure 1 depicts an estimate of the total residential primary energy consumption in this country for 1978 and breaks it down into its component uses. Figure 2 shows how hot water usage is distributed in the residential sector. Approximately 9% of the primary energy used in the household is consumed in the laundry process. The washing process utilizes 6.3% of the total and the drying process uses 2.7%.

The American Association of Home Appliance Manufacturers (AHAM) reports[1] an average 1972 base model clothes washer consumption of 5.06 kWh per load at the washer. This usage is made up of 4.84 kWh per load (96% of the total energy input) for the heated water and 0.22 kWh per load (4%) for the electricity needed to operate the motor and controls of the machine.

The National Bureau of Standards (NBS) reports[2] an average electric clothes dryer consumption of 2.65 kWh per load at the dryer. This usage is made up of 2.47 kWh (93%) per load to heat the air passing

ORNL–DWG 78-11795A

RESIDENTIAL PRIMARY ENERGY CONSUMPTION
(ESTIMATED AS 16.5 QUADS IN 1978)

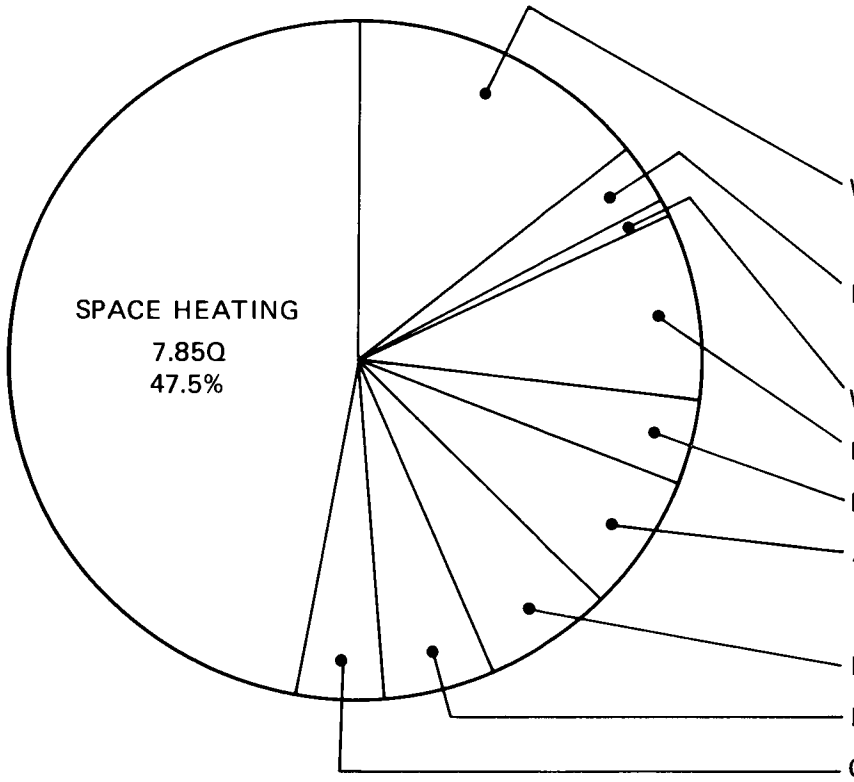

APPLIANCE	ANNUAL ENERGY USE (QUADS)	% OF SECTOR
WATER HEATER	2.37	14.4
GAS	0.88	
ELECTRIC	1.27	
DRYERS	0.46	2.8
GAS	0.07	
ELECTRIC	0.39	
WASHERS	0.06	0.4
REFRIGERATORS	1.49	9.0
FREEZERS	0.65	3.9
AIR-CONDITIONERS	1.12	6.8
ROOM	0.37	
CENTRAL	0.75	
LIGHTING	0.96	5.8
RANGES	0.89	5.4
OTHER	0.67	4.0
TOTAL	8.67Q	52.5%

Fig. 1. Residential primary energy consumption (estimated as 16.5 quads or 17.4 EJ in 1980).

ORNL–DWG 78-11794A

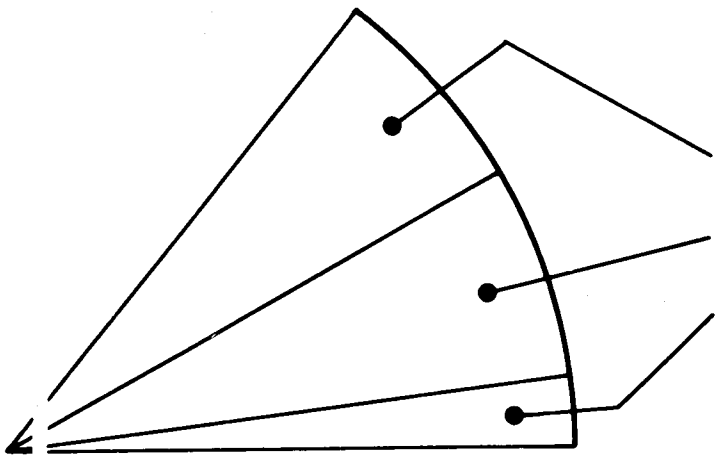

USE	ANNUAL ENERGY USE (QUADS)	% OF HOT WATER
GENERAL	1.0	42
WASHER	1.0	42
DISHWASHER	0.4	16
TOTAL	2.4	100

Fig. 2. Residential use of hot water (estimated as 2.4 quads or 2.5 EJ of primary energy in 1980).

through the dryer and 0.18 kWh (7%) per load to operate the motor and controls of the dryer. Figure 3 depicts the dryer consumption for both gas and electric dryers.

AHAM rating standards (which simulate average usage) specify 34 loads of wash per month to pass through each washing machine and the average load to weigh 7 lb (3.2 kg) when dry. A recent Whirlpool survey[3] showed the average wash load to weigh 5.6 lb (2.5 kg) when dry. Other recent surveys by Procter and Gamble[4,5] revealed that the average wash load weighed 5.7 lb (2.6 kg) when dry, and that 78% of the homes containing an automatic washer also had a dryer. The monthly average number of loads was 35 through the washer and 32 through the dryer.

Merchandising magazine[6] reports that, in 1978, there were 56 million washers and 45 million dryers in the United States. There are 2.3 electric dryers for every gas dryer.

A survey reported by the Department of Agriculture indicates that the average service life of a new washer is 11 years and that of a new dryer is 13 years.[7]

Tables containing population and energy consumption data pertaining to washers and dryers are contained in the Appendix.

ORNL–DWG 78-11796

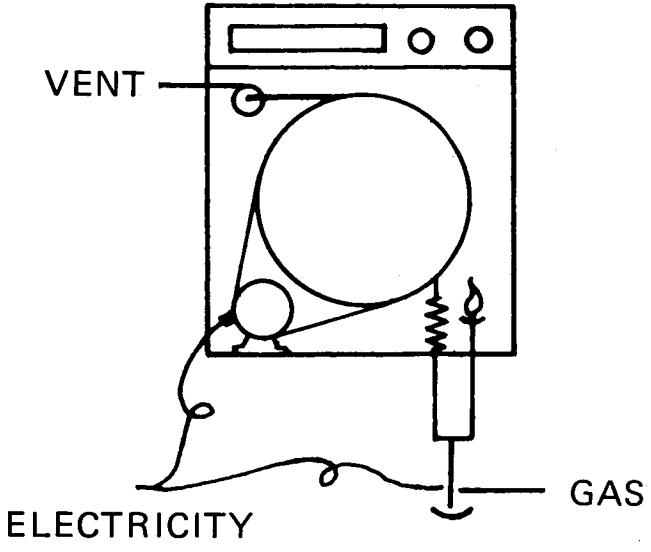

ENERGY CONSUMPTION
(Btu/load)

	HEAT	ELECTRICITY*
	ELECTRIC UNITS	
POINT OF USE	8,400	600
PRIMARY	28,000	2,000
	GAS UNITS**	
POINT OF USE	10,200	600
PRIMARY	10,200	2,000

*ALL NONHEATER USES (MAINLY THE MOTOR)
**WITHOUT STANDING PILOT

Fig. 3. Heating accounts for most of clothes dryer energy consumption.

3. THE AUTOMATIC WASHING MACHINE

3.1 Energy Consumption

Figure 4 is a schematic drawing of the most popular type of automatic washing machine in use in this country today,[8] the center post agitator. Machines of this type as well as those of the pulsator and tumbler type are expected to operate each day and to clean soiled fabrics without damaging the fabrics. The typical machine will operate on a cycle composed of a wash period, a rinse period, and a water-extraction period. Since the machine must be able to clean a variety of different fabrics of different degrees of "dirtiness" using a variety of chemical additives, the washing machine must be versatile in operation and allow the user to determine how the machine will operate.

Table 1 lists most of the variables which are present during the laundry treatment process. Many of these variables are fixed in any one situation, but the proper combination of the remaining variables will give the user the desired results; that is, maximum cleanliness, minimum cost, acceptable cleanliness at minimum cost, minimum water usage, etc.

Ideally the washing machine should be operated so that acceptable cleanliness at minimum cost is obtained. However, there are times when illness in the household, diapers, very dirty clothes, etc. dictate that maximum laundry cleanliness be obtained. This situation calls for a long, hot water wash cycle with the addition of bleach as well as detergent.

Although it has been shown many times that hot water is able to do a better cleaning job than cold water, a hot water wash cycle uses much more energy than a cold water wash cycle. Figure 5 shows the energy consumption of a washing machine as a function of the amount of hot water used per wash load and the temperature rise of the cold water in the water heater using a 100% efficiency for the water heater. Actual energy consumption would be greater and would depend on the water heater efficiency. Typical efficiency values are on the order of 80% for electric water heaters and 50% for fossil-fueled water heaters. Figure 6 shows how the cycle temperature selection of the

ORNL-DWG 79-10408

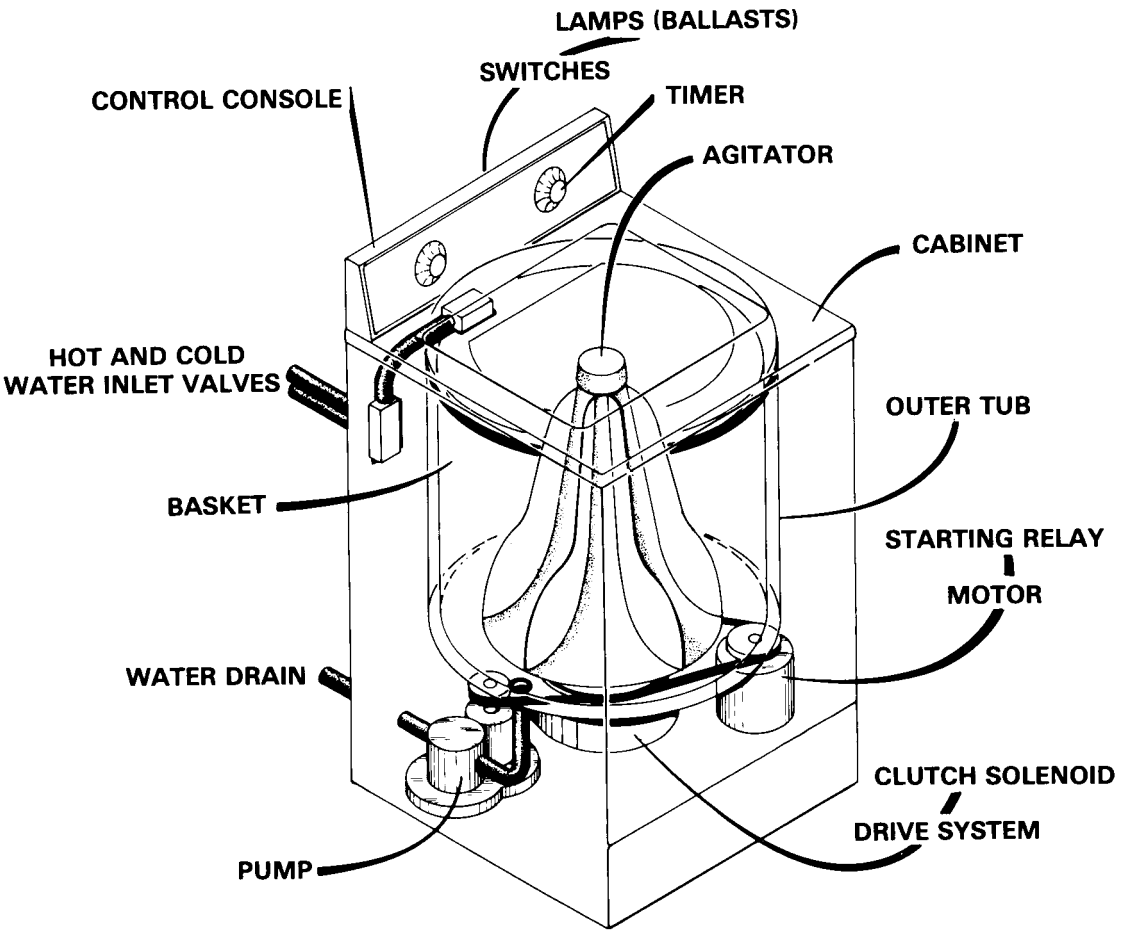

Fig. 4. Typical automatic washer construction schematic.

Table 1. Laundry treatment variables

CLOTHES	Fabric	Construction	Color	Condition	Quantity
	Cotton Cotton-Syn. Synthetic Other	Woven Knit Fragile	White Colored	Sl. soiled ↓ Dirty	Small ↓ Large

WASH CYCLE	Water			Mechanical Input			Detergent				Other Additives
	Condition	Temperature	Quantity	Type	Speed	Time	Type	Makeup	Suds	Quantity	
	Hard Soft	Hot Warm Cold	Minimum ↓ Maximum	Agitator Pulsator Tumbler Impeller	Normal Slow	Short ↓ Long	Phosphate Non-Phos.	Anionic Cationic Non-Ionic	High Low	Small ↓ Large	Fabric soft-ener Bleach Enzyme Water con-ditioner Spray cleaner

RINSE CYCLE	Type	Temperature	Speed	Additives	Other
	Spray Soak Agitate	Warm Cold	Normal Slow	Fabric softener Acid Bactericide	Cooldown

EXTRACTION CYCLE	Speed	Time
	Normal Slow	Short Long

DRYING CYCLE	Type	Temperature	Cycle	Additives
	Tumble Clothes line	Ambient ↓ Hot	Timed Auto	Softener Perfume

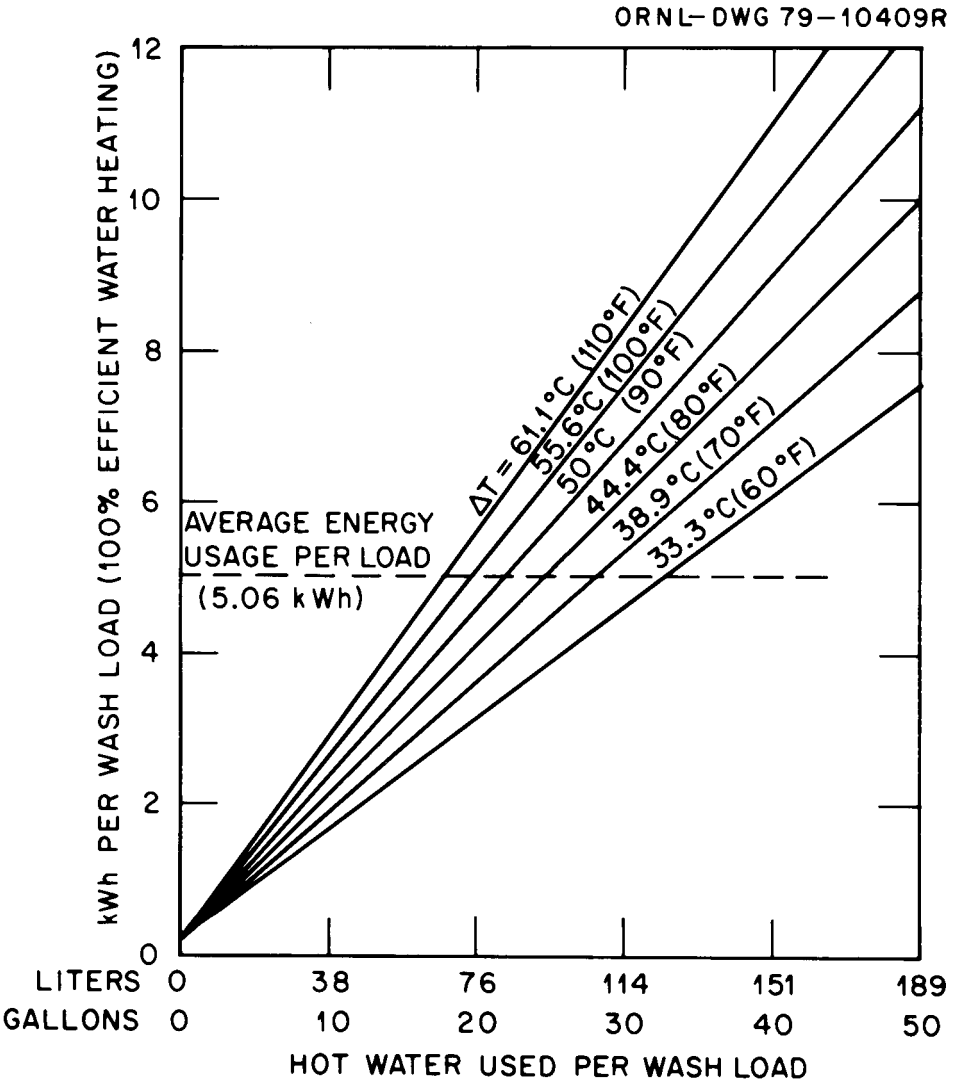

Fig. 5. Effect of water heater temperature rise and hot water usage on energy consumption of washing machine.

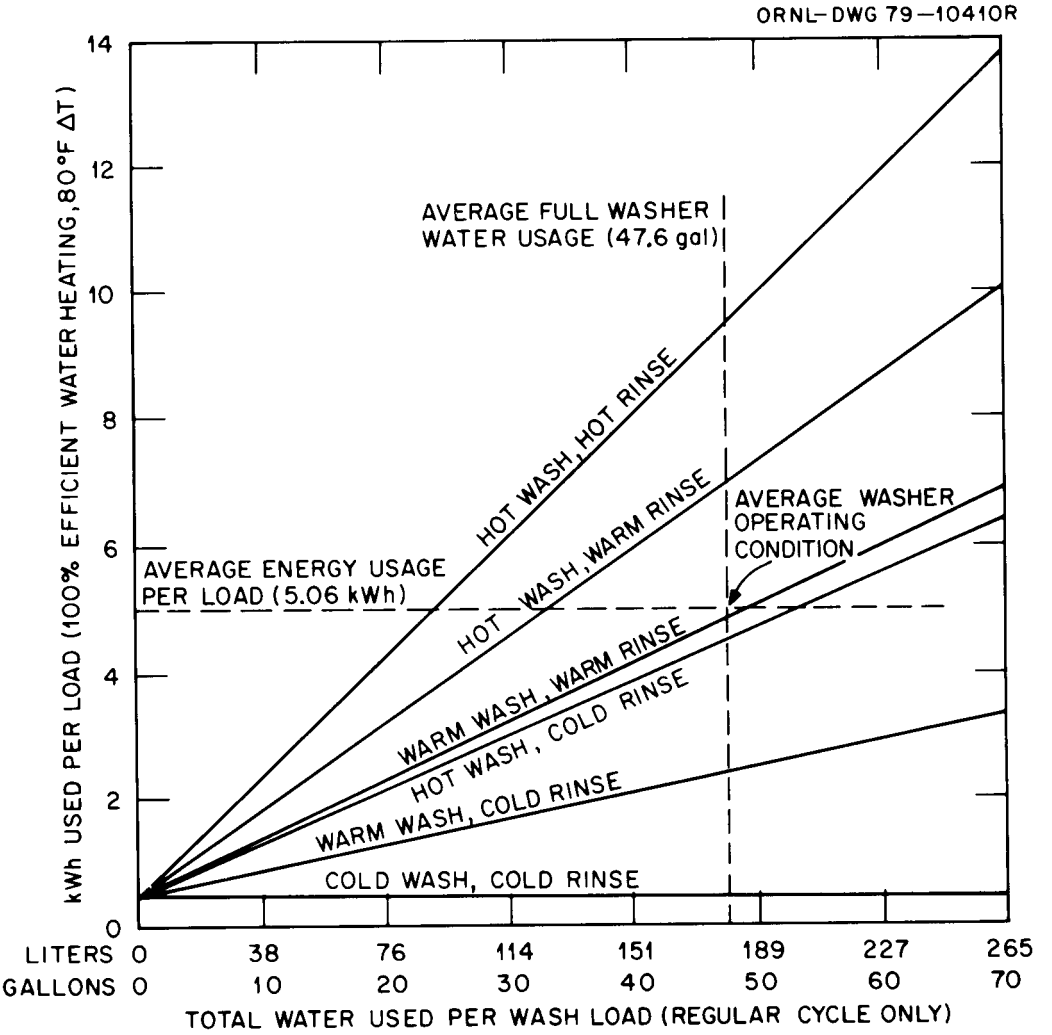

Fig. 6. Effect of cycle selection and water usage on energy consumption of washing machine.

washing machine affects the total washing machine energy consumption for full-load, regular wash cycles with a 50-50 mix of hot and cold water to make warm water.

Using the previously mentioned AHAM figure of 5.06 kWh per load of wash with Fig. 6 shows that the average consumer usage corresponds to a hot wash with cold rinse or warm wash with warm rinse cycle with the water-level control set on maximum. Figure 5 shows that 5.06 kWh corresponds to about 25 gal (94.6 liters) of hot water used per wash load at an 80 F° (44.4 C°) water temperature rise in the water heater.

A survey conducted by Procter and Gamble in 1976–77[5] produced the information contained in the following table on consumer washing machine cycle usage.

Wash/rinse selection	Percent of loads	Median wash water temperature
Hot/warm	21	130°F (54.4°C)
Hot/cold	14	130°F (54.4°C)
Warm/warm	29	100°F (37.8°C)
Warm/cold	21	100°F (37.8°C)
Cold/cold	15	60–70°F (15.6–21.1°C)

Assuming all consumers used an "average" machine [47.6 gal (180 liters) per load on maximum water-level setting] as shown in Fig. 6, the average power consumption per load from the above survey would be 4.1 kWh. It is interesting to note from these data that 50% of the wash loads used warm rinse water and 35% of the wash loads used hot wash water. This suggests that simply eliminating the warm rinse option on the washer could save about 1.3 kWh per load, or 31% (average weighted data).

The obvious question that emerges from the previous statement concerns the advantages of a warm-water rinse over a cold-water rinse. This question is discussed in Sect. 3.5.

Table 2 contains some data on currently manufactured washing machines and their energy usage as a function of cycle usage. The table was constructed from data published in *Consumer Reports* magazine in October 1978, and applies to the maximum fill setting for each machine. Surveys

Table 2. Energy consumption of several washers

Washer	Cycle I[a,b]	Cycle II[a]	Cycle III[a,b]	Cycle IV[a]
	Total kWh[c]	Total kWh[c]	Total kWh[c]	Total kWh[c]
A	6.1	4.1	2.0	0.2
B	6.7	4.5	2.4	0.2
C	7.4	4.9	2.4	0.2
D	6.9	4.7	2.7	0.2
E	7.4	4.9	2.2	0.2
F	6.9	4.7	2.7	0.2
G	6.9	4.9	2.4	0.2
H	7.2	4.9	2.7	0.2
I	7.8	4.9	2.4	0.2
J	7.8	4.9	2.4	0.2
K	7.8	5.3	3.2	0.2
L	7.6	4.5	2.4	0.2
M	6.9	4.7	2.7	0.2
N	6.1	4.1	1.8	0.2
O[d]	3.9	2.0	1.2	0.2

[a]Cycle I: regular, hot wash, warm rinse. Cycle II: regular, hot wash, cold rinse. Cycle III: durable press, warm wash, cold rinse. Cycle IV: durable press, cold wash, cold rinse.

[b]All machines may not offer all cycles, but estimates were made for comparison purposes.

[c]Total kWh = maximum fill setting, 8-lb (3.6-kg) wash load, 80 F° (44.4 C°) ΔT water rise, 100%-efficient water heating. Results calculated from hot water data from *Consumer Reports* (October 1978).

[d]Data from October 1977 *Consumer Reports*, tumbler-type machine.

by Procter and Gamble[5] show that 79% of the wash loads [5.4 lb (2.4 kg) average weight] done in normal capacity [14-lb (6.5-kg)] washers, and 60% of the wash loads [5.9 lb (2.7 kg) average weight] done in large capacity [18-lb (8.2-kg)] washers, were done at the maximum fill setting of the washing machine.

Clearly, the foregoing discussion and data point out the fact that many automatic washing machines in the country are not being used in the most energy efficient manner.

Washer O from Table 2, a tumbler-type machine, appears to be much more energy efficient than any of the other washers listed in the table. An explanation is presented here to explain in part the large difference in energy consumption between washer O and the others. Washer O has a capacity of about 12 lb (5.4 kg) while the other machines can hold about 18 lb (8.2 kg). [The wash load used in Table 2 weighed 8 lb (3.6 kg).] Since all water-level controls were on the maximum setting, several of the machines would come proportionately closer to washer O on a kWh/wt of laundry basis at rated capacity. However, the water-level control on many of the washers in Table 2 can only vary the water usage by about 25–50%, which still leaves them far behind washer O in energy usage for smaller loads. As the size of the wash load increases, though, the other washers come closer to washer O in energy usage. For washing loads approximating the size of the national average [5–7 lb (2.3–3.2 kg)], the tumbler-type machine will be much more energy efficient than the larger-sized center-post agitator types.

Tables 3 and 4 contain some data on a sampling of washing machine specifications and test data on motor power consumption for the several parts of the cycle.[9] These data show that the energy used in heating the hot water used by the machines is much greater than the mechanical energy input to the machines.

Because the conservation of thermal energy (hot water) input into a washing machine reduces the cost of the washing process to the consumer, the most practical method of improving the energy efficiency of automatic washing machines is reduction in hot water usage.

Table 3. Sample of washing machine specifications[9]

	Range	Typical machine
Rated size, lb (kg)	14-20 (6.4-9)	18 (8.2)
Motor horsepower	1/3-3/4	1/2
Rated current, A	7-10	8.5
Tub capacity, ft^3 (liters)	2.3-3.1 (65.1-87.7)	2.6 (73.6)
Max. agitate time, min	12.5-19.5	14
First spin time, min	3.5-6	5
Rinse time, min	2-5	4
Final spin time, min	6.5-8.5	7.5
Total motor on-time, min	26-33	30.5
Spray time, min	0.3-2.2	0.5
Spray volume, gal (liters)	1-11 (3.8-41.6)	2 (7.6)

Table 4. Washing machine test data[9]

	Range	Average	Range	Average
Load size, lb (kg)	14 (6.4)	14 (6.4)	8 (3.6)	8 (3.6)
Water retention with warm rinse, %	67-81	75.8	77-89	83
Motor energy, Wh				
Maximum time agitation	116-177	134	105-152	121
First spin	30-56	42	23-59	37
Rinse	25-42	35	21-42	34
Final	47-81	61	51-75	60
Total	233-309	272	209-295	252

A typical efficiency of the squirrel cage motor currently used in washers is 53% at 70% of full load rating.[10] If capacitor-run motors were used, the motor efficiency could increase to 60%, but this would only increase the overall washer efficiency by 0.5%. However, such an improvement would save 6.7×10^{12} Btu/yr (7.1×10^{15} Joules/yr) of primary fuel in the nation, or about 11 kWh/yr to each owner of a washer. A simple analysis shows that, if power costs at a present 4 ¢/kWh escalate at 2% per year above inflation and the consumer could get an effective 4% interest rate for the 11-year useful life of the washer, he could spend a $4.12 premium for the improved motor and break even. This means that the motor manufacturer can spend about $1.25 for the motor improvements. The appendix contains a sample calculation for these savings as well as a table showing savings for other values of motor efficiency improvements.

Improvements in dryer motor efficiency should parallel the results of washer motors.

A promising electronic power factor controlling add-on device has been developed at NASA Marshall Space Flight Control Center which can increase the efficiency of lightly loaded motors.* It could provide an alternative to building in motor efficiency or provide additional savings even with more efficient motors. However, its cost must still be in the $4 range to the consumer to make it economically feasible when compared to the currently used motors.

As the use factor of laundry equipment increases, the economics of most energy conserving devices becomes more favorable. Coin-operated laundry stores use residential type washers and commercial dryers. Their use factor is estimated to be four to five times higher than typical residential usage. Hence, energy conserving devices will appear more favorable from an economic viewpoint.

---

*For more information contact Electronic Relays, Inc., 1438 Brook Drive, Downers Grove, Illinois 60615.

3.2 The Cleaning Process

The process of removing soil from a fabric is not simple. There are three methods available to accomplish this task — mechanical, thermal, and chemical. The mechanical method involves driving the soil from the fabric by bending and stretching the fabric, rubbing contact between the fabric and both itself and adjacent fabrics, and by the hydraulic action of the water on the fabric. The thermal method involves increasing the "solubility" of the soil in water. The chemical method involves chemical reactions between the soil and the detergent or the fabric and the detergent to remove the soil. The three cleaning methods also complement each other, so mechanical agitation at elevated temperatures will increase the activity of the detergent on the soil.

The nature of the fabric imposes limits on the amount of mechanical work, the temperature, and the concentration and type of detergent that can be used for cleaning. The purpose of laundering a fabric is not simply to clean it, but to clean it while also retaining the original shape, color, and strength of the fabric. The fabric must also not be wrinkled, nor any special finish treatments (anti-soil, flame retardant, etc.) be removed. Also, laundry should smell nice and be relatively "germ free."

Since the cleaning process involves soiling agents, water, fabrics, and detergent, some background information on these items will be presented before discussing the wash cycle in more detail.

3.2.1 Soiling agents

Soiling agents are those substances which turn clean laundry into dirty laundry. They are made up of many substances such as clay, body greases and oils, and food stains. These substances can impregnate themselves between the fabric fibers, smear themselves on the fabric surface, bond themselves to the fabric by electrostatic or surface tension forces, and even react chemically with the fabric.

Since soiling agents come in so many forms, it is difficult to rid a fabric of them in a simple manner. Hence the reason for the three-pronged attack by mechanical, thermal, and chemical methods.

3.2.2 Water

Although water is a very abundant substance, pure water is rare in nature. Even rainwater picks up carbon dioxide and other pollutants in the atmosphere on its path to the ground. When it comes in contact with the ground, water, because it is a very good solvent, dissolves all types of minerals. Of principal concern to the laundry process are three substances — iron, calcium, and magnesium.

Iron in the ionic form of Fe^{+2} and Fe^{+3} is a particularly troublesome substance to deal with and will usually result in red stains (rust) on fabrics if present in a concentration of more than about 0.2 mg/liter. However, most municipal supplies deliver water at concentrations which are unobjectionable. For those areas where iron is a problem, home treatment devices employing ion exchange or oxidation and filtration methods are usually effective.

Calcium and magnesium in the ionic forms of Ca^{+2} and Mg^{+2}, respectively, are the substances which are responsible for hard water. Hard water is objectionable because at combined calcium and magnesium concentrations greater than about 60 mg/liter, these ions react noticeably with soaps and detergents and form a scum which is familiar to most of us as the ring around the bathtub. Most municipal water supplies are delivered at hardness concentrations of about 120 mg/liter, so hard water is a substance which must be dealt with in the laundry process. If not controlled, hard water will cause whites to turn gray and colors to turn dull, as well as causing fabrics to lose their soft feel and to wear out faster. Many homeowners find it prudent to use ion exchange water softeners if their water supply has a hardness greater than 160 mg/liter (expressed as mg/liter of $CaCO_3$ equivalent).

3.2.3 Fabrics and finishes

Not too long ago most of the laundry washed in a washing machine was made of cotton fibers and many had to be ironed after they were clean. Durable-press, a process which treated the cotton fabric with formaldehyde to crosslink the fibers, revolutionized the garment industry. This process made apparel presentable and wearable without

ironing. Shortly thereafter polyester and polyester-cotton blends appeared on the market as well as other synthetics and blends. Flameproof finishes on childrens' garments were mandated by the government. Soil-resistant finishes became widespread.

These new fabrics and old fabrics with new finishes did not respond well to the then-conventional cycles on washing machines and dryers, so the cycles were modified to handle them. Cleaning the fabrics was not enough — they had to be cleaned without removing the desirable new, easy-care properties of the fabric.

3.3 Detergents

A detergent is a cleaning agent and is often referred to as a surfactant or surface-active agent. The term detergent is commonly used to denote both the surface-active cleaning agent and the finished cleaning product including the surfactant. Synthetic detergents differ from soaps in their chemical makeup. A soap is the sodium salt of a fatty acid, while an anionic detergent is the sodium salt of a sulfated or sulfonated fatty acid. There are also cationic and nonionic detergents.

An example of a soap is sodium palmitate, $C_{15}H_{31}COONa$, while sodium lauryl sulfate, $C_{12}H_{25}OSO_3Na$, is an example of a detergent.

Both detergents and soaps have a hydrophilic (water-liking) and a hydrophobic (water-disliking) end of each molecule. As a result of this structure, the hydrophobic (hydrocarbon) ends of the molecules congregate at the surface of the water solution, while the hydrophilic (carboxylic or sulfonate) ends of the molecules congregate below the surface of the water. This orientation of the detergent molecules dramatically lowers the surface tension of the water and thus allows the water to wet the soiled objects better, facilitating the removal of soil from the object.

A present-day packaged laundry detergent contains a mixture of many chemicals, some of which are proprietary. A general range of the formulation of a modern packaged detergent is contained in Table 5.

Some detergents also contain chemicals for controlled suds action and enzymes for stubborn stain removal. Other laundry aids are bleaches

Table 5. Typical detergent formulation

Item	Chemical	Concentration	Purpose
Surfactant	linear alkyl sulfonate (LAS)	2-20%	chief cleaning agent
Builder, water conditioner	phosphates, carbonates, silicates, citrates, borax, polyelectrolytes	20-70%	immobilize hardness ions, keep soil suspended in water, maintain alkalinity, emulsify greases, provide corrosion protection
Anti-redeposition agent	carboxy methyl cellulose	<1%	keep soil from redepositing on laundry during wash cycle
Perfume		<1%	provide a pleasant odor to laundry
Brightener		<1%	make colors appear brighter by shifting absorbed uv light to visible region
Bulking agent	sodium sulfate	10-40%	processing aid, maintains product flowability

and fabric softeners. Bleaches are oxidizing agents (perborates and hypochlorites) which whiten fabrics. Fabric softeners are long-chain hydrocarbons which deposit on the fiber ends of clothes and give the material a soft feel and provide static control.

3.3.1 Detergents and phosphates

Initially, all detergents contained phosphates such as trisodium orthophosphate, Na_3PO_4, and sodium tripolyphosphate, $Na_5P_3O_{10}$, in concentrations of about 50 wt %. As mentioned earlier, the phosphates are effective water conditioners, soil solution suspenders, pH controllers, and cleaners. In the late 1950's phosphates were identified as one of the materials that contribute to eutrophication, or aging, of our waterways.

A search for a phosphate substitute turned up sodium nitrilo triacetate (NTA). Although more expensive than phosphates on a weight basis, NTA was very effective in lesser concentrations. However, it was found to be suspect for health and safety reasons and was voluntarily removed from the U.S. market, although it is used in Sweden and Canada.

A recent review of NTA by qualified scientists under the auspices of the U.S. and Canadian International Joint Commission of the Great Lakes (IJC)[11] has concluded that the use of NTA should not be prohibited as a builder in formulated detergents.[12] The subject is currently under review by the U.S. Environmental Protection Agency.

The detergent manufacturers reduced the phosphate content of their formulations to 35% and finally to about 25% (6% phosphorus). The cleaning ability of the detergents generally decreased with the phosphate reduction, but results are still in the acceptable range.

For those areas of the country where a phosphate ban is in effect, detergents were formulated using sodium carbonate, citric acid, and various polyelectrolytes. Also, the surfactant itself was modified in some cases to a mixture of anionic and nonionic species. None of the 0% phosphorus formulations work as well as those containing phosphorus, but the results are still considered acceptable where it has been decided that it is necessary to reduce the environmental effects of the phosphates. However, many of the 0% phosphorus formulations have created their own problems such as toxicity, corrosion, and carbonate deposits.

3.3.2 Cold water detergents

As polyester and other synthetic fibers became more popular in fabrics and durable press and other finishes were added to both cotton and synthetics, the need arose to clean these fabrics without removing the permanent press, durable press, etc., built into or added onto the fabric. Cooler temperature washing with gentle agitation was the recommended procedure to accomplish this. Also, cold water laundering promised great energy savings over hot water laundering. Both warm and cold water washing have increased significantly over the last 10 years.

However, many detergents did not perform as well at low temperatures as they did at higher temperatures. Also, some powder detergents would not dissolve well in cold water.

New cold water detergents were formulated using, among other things, linear alcohol ethoxylates to improve low temperature performance. Washing performance for lightly soiled synthetics is acceptable, but in general these detergents perform much better in warm water than in cold water.

Another problem which arose in cold water laundering was concern about the adequacy to kill germs, especially if the fabrics are line-dried indoors. This is discussed in Section 3.3.3.

3.3.3 Detergents and germs

When most of us refer to germs we are really talking about bacteria and viruses. A bacterium is a single-cell (or noncellular) living plant which can cause many types of chemical reactions to take place. Most bacteria are beneficial, but some, called pathogens, cause disease. A virus is similar to a bacterium, but is generally much smaller, and only grows in living cells. Viruses are capable of causing disease in man, plants, and animals.

Both bacteria and viruses are present in laundry and in the water used to wash the laundry. Ideally after the laundry is washed and dried it should be germ free. The advent of cold water detergents caused a great deal of attention to be focused on the germ situation.

In general, more effective bacteria removal is brought about[13,14] by higher wash water temperatures, higher detergent concentrations, longer wash times, and higher dryer temperatures. Some bacteria are more hardy than others, and the use of a dryer can contribute significantly to the bacteria kill. Bacterially clean laundry can become contaminated both by washing with bacteria-laden laundry and also from the residue left in the washing machine from the previous load.

However, bacteria kills of 99.9%+ are possible using long, hot wash cycles with high detergent and bleach concentrations followed by drying in a dryer on the high heat setting. Such conditions are usually only necessary when illness is present in a household and perhaps when washing diapers.

The germ problem is especially prominent in cool water laundering and will remain so until an acceptable bactericide is found.

3.4 Economics of the Wash Cycle

This section discusses how the cost of the wash cycle (excluding rinse and extraction cycles) is affected by varying the amount of thermal, mechanical, and chemical input into the wash cycle.

Figure 7 is a somewhat complex plot of the wash cycle cost variables for constant cleaning. It shows the effect of the wash water temperature on the total cost of the wash cycle. The plot is made up of the sum of the costs of the three variables — mechanical energy cost, hot water cost, and detergent cost — as functions of wash water temperature to give constant cleaning power.

The first incremental cost shown is that of mechanical energy, which is the product of the power input times the agitation time times the unit cost of electric power. The cost of mechanical input was so insensitive to agitation time over the 5- to 13-min range of interest and also was so small (0.17¢ to 0.43¢) relative to the cost of the other two inputs that it was simply plotted as a straight line of zero slope at the 0.4¢ level.

The incremental cost of hot water was plotted above the mechanical energy cost line. Since the hot water cost is a linear function of the

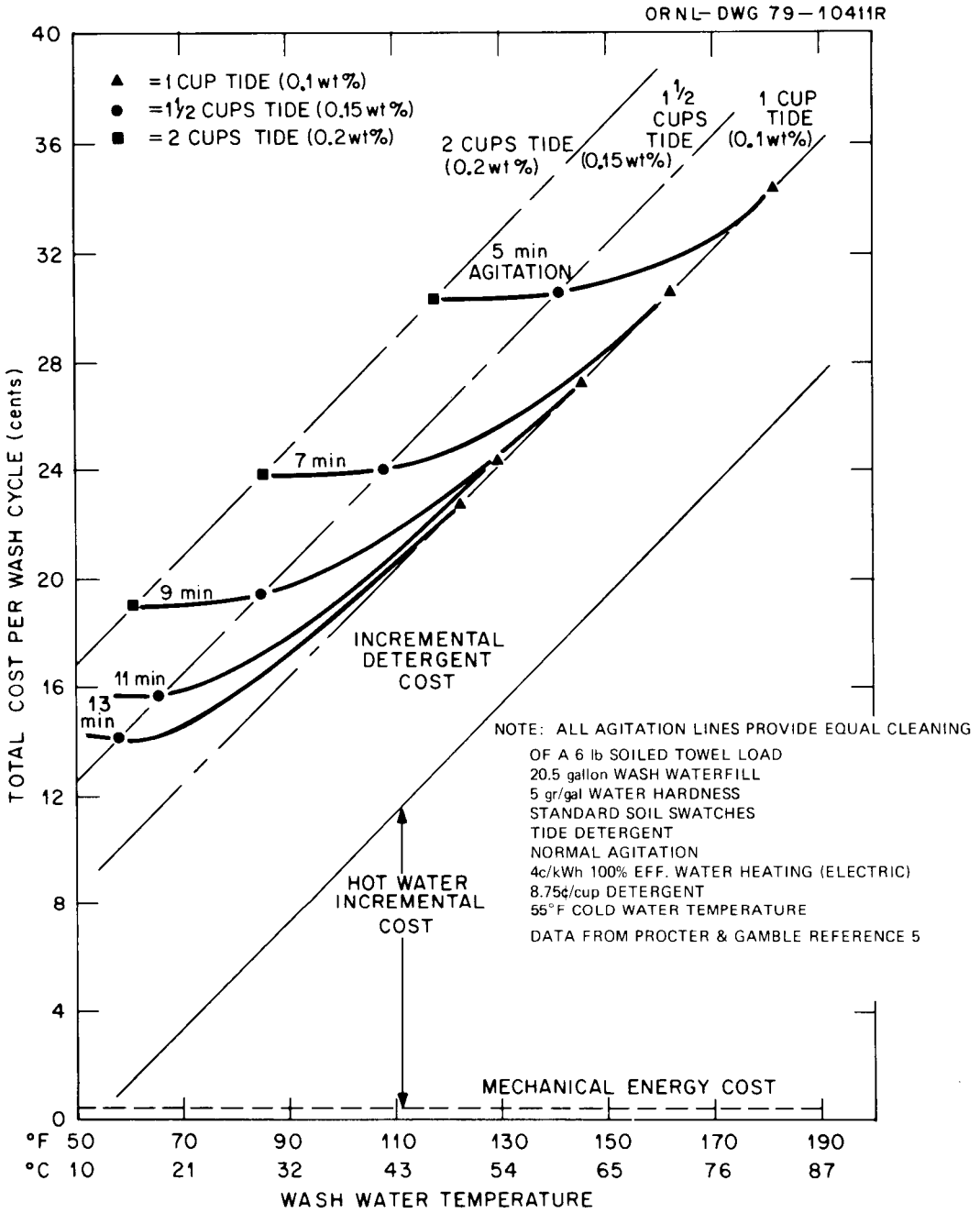

Fig. 7. Wash cycle cost variables for constant cleaning (electric water heating).

wash water temperature, it was plotted as a straight line of slope 0.2¢/F° (0.11¢/C°). To arrive at the hot water cost figure the following constants were used: 4¢/kWh 100%-efficient water heating, cold water temperature of 55°F (12.8°C), and 20.5 gal (77.6 liters) wash water fill in the machine.

The next incremental cost item on the graph is that of the detergent. Since this item is independent of wash water temperature, it is plotted as a series of lines parallel to the hot water incremental cost line. The detergent used was Tide, the most popular brand of detergent in the United States. One cup (0.24 liter) of Tide weighs 77 g and gives a concentration of 0.1 wt % when dissolved in 20.5 gal (77.6 liter) of water. A cost for Tide of 8.75¢/cup (72¢/liter) was used, based on early 1979 prices.

The reason for plotting the three variables on Fig. 7 as described above is that one can obtain a very good perspective of the incremental cost and also the effectiveness of the three variables on cleaning.

The data used to plot the constant cleaning lines on Fig. 7 were presented in a paper given by A. J. Fuchs of Procter and Gamble.[5] A copy of the extrapolated plots from his paper is contained in the Appendix along with the data derived from them. Because several points on the high and low ends of the temperature scale of Fig. 7 were from extrapolated readings, the plot may not be 100% quantitative, but the trends shown by it are quite distinct.

The data gathered by Procter and Gamble are the result of many measurements from similar wash loads consisting of 6 lb (2.7 kg) of soiled towels, with standard soil swatches. To plot the data on Fig. 7, a level of cleaning which is acceptable to the consumer (line J in their original graphs) was plotted for constant mechanical energy input with varying water temperatures and detergent concentrations. This resulted in a family of curves of constant cleaning power and different parameters of mechanical energy input.

The general trend of Fig. 7 is such that, as the wash water temperature is lowered, either the detergent concentration or the agitation time (mechanical energy input), or both, must be increased to obtain

equivalent cleaning power. However, the total cost of the wash cycle decreases as the wash water temperature is decreased, even though more detergent and/or agitation time are added. The net result of this situation is positive, as energy is conserved and the consumer with an electric water heater has equally clean clothes while spending less money.

Figure 7 was plotted using an incremental hot water cost based on a 4¢/kWh 100%-efficient hot water supply. However, about two-thirds of the water heaters in the country are gas-fired and pay a rate equivalent to about 1 or 2¢/kWh for 100%-efficient water heating.

Figure 8 shows the effect of cheaper hot water on the total cost of the wash cycle. It is a plot of the Procter and Gamble data as used in Fig. 7, but with the incremental cost of hot water reduced by a factor of four, approximating that of a high-efficiency water heater using low-priced fuel [i.e., $\$2.40/10^6$ Btu gas (1.06×10^9 J) and 80% heater efficiency].

Once again it can be seen that lowering the wash water temperature can lower the wash cycle cost — up to a point. The mechanical energy input must be maximized to realize any savings. The total cost curves for long agitation time come to a minimum and are rather insensitive to cost in the 85 to 120°F (29 to 49°C) temperature range. Lowering the water temperature below 85°F (29°C) increases the cost of the wash cycle as the increase due to the incremental detergent cost is more than the savings from the incremental hot water cost.

The cost of hot water does indeed have a large effect on the cost of the wash cycle, but cold water washing is not always the most economical method for the consumer to use, even though it conserves the most energy. Warm water washing with maximized mechanical energy input and moderate detergent concentrations appears to be the best general combination for washing clothes.

As is true in most everything, special situations also arise in the laundry process which dictate that established rules for economy not be followed. In those instances where illness poses a chance of infection in the household, maximum cleanliness (i.e., hot water, maximum agitation, and high detergent concentration), should be attained. Diapers and heavily soiled laundry may also require this treatment.

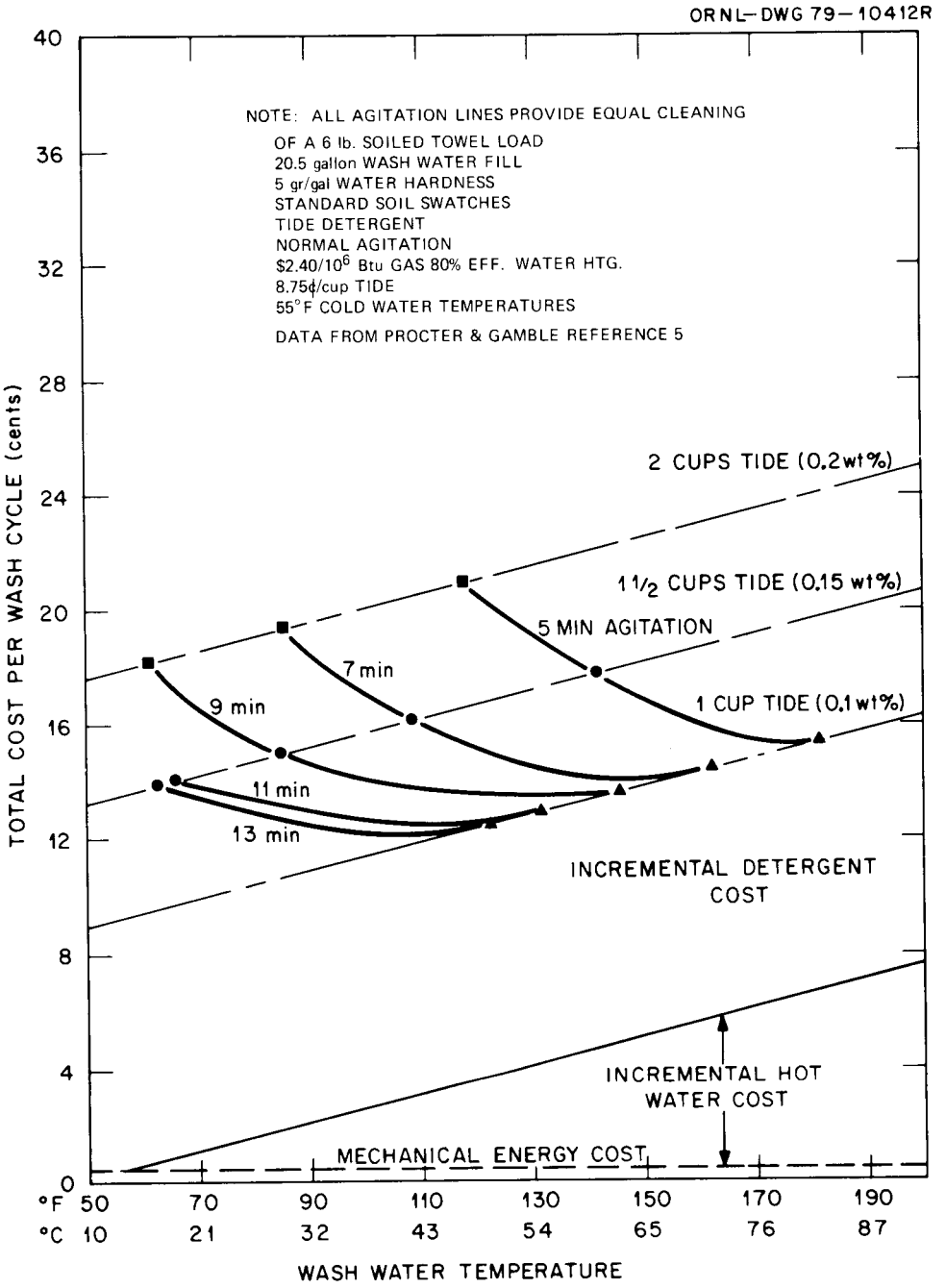

Fig. 8. Wash cycle cost variables for constant cleaning (gas water heating).

Fragile garments may require minimized mechanical energy input and perhaps should be hand-washed instead of machine-washed.

3.5 The Rinse Cycle

The purpose of the rinse cycle is to remove any excess detergent from the wash load. The rinse cycle is a dilution process and Whirlpool,[3] Procter and Gamble,[5] and General Electric[10] all agree that cold water accomplishes this task as well as warm water. However, a warm rinse does promote better water extraction from a wash load than does cold water and also provides a "preheated" wash load to the dryer, thereby conserving dryer energy.

The average water consumption of a maximum fill, regular wash cycle of the large and standard size washers tested by *Consumer Reports* from 1972—78 was 47.6 gal (180.2 liters). This is divided into 22 gal (83.4 liters) in the wash cycle and 25.6 gal (96.8 liters) in the rinse cycle. Assuming warm water is an equal mixture of hot and cold water, the extra energy in the water for a warm rinse at 112°F (44.4°C) over a cold rinse at 74°F (23.3°C) is:

$$12.8 \text{ gal} \times 8.34 \text{ lb/gal} \times 1 \text{ Btu/lb}\cdot\text{F}^\circ \times (150 - 74)\text{F}^\circ = 8113 \text{ Btu } (2.38 \text{ kWh}) .$$

According to Goodman of Whirlpool,[3] for a 14-lb (6.4-kg) load of dry clothes (cotton), a warm rinse leaves 0.89 × 14 = 12.46 lb (5.7 kg) of water in the clothes after the extraction cycle, while a cold rinse leaves 0.955 × 14 = 13.37 lb (6.1 kg) of water in the clothes after the extraction cycle. The difference in water extraction is 0.91 lb (0.4 kg) of water.

The least efficient electric dryer from *Consumer Research* tests,[15] reported in July 1975, used 2008 Btu (0.59 kWh) to evaporate 1 lb (0.45 kg) of water from a 12-lb (5.45-kg) wash load. The energy saved in the extraction of 0.91 lb (0.4 kg) of water is 0.91 × 0.59 = 1827 Btu (0.54 kWh).

The energy used by the dryer to warm the wash load from 74°F (23°C) to 112°F (44°C) is approximately:

$$\frac{14 \text{ lb dry clothes} \times 0.5 \text{ Btu/lb}\cdot\text{F}^\circ \ (112 - 74)\text{F}^\circ + 13.37 \text{ lb } H_2O \times 1 \text{ Btu/lb}\cdot\text{F}^\circ \ (112 - 74)\text{F}^\circ}{0.50 \text{ dryer efficiency}}$$

$$= \frac{266 + 508}{0.50} = 1548 \text{ Btu } (0.45 \text{ kWh}) \ .$$

However, 8113 Btu (2.38 kWh) were added to the washer to save the above 1827 and 1548 Btu (0.54 and 0.45 kWh). The total net loss by using the warm water rinse is:

$$8113 - 1827 - 1548 = 4738 \text{ Btu } (1.39 \text{ kWh}) \ .$$

The above simple calculations show that a cold water rinse is more energy-efficient than a warm water rinse, even when a dryer is used in conjunction with a washer, taking full advantage of starting the drying cycle with warm clothes.

The Appendix contains a calculation which shows that on a national basis, 11.1% of the total primary energy presently used in the residential laundry process may be saved by the elimination of the warm rinse option.

3.6 The Extraction Process

All automatic washers provide an extraction cycle in addition to washing and rinsing cycles. The purpose of the extraction cycle is to remove some of the water remaining in the wash load following the rinse cycle. The extraction process is a nonthermal process in that only mechanical energy and no external source of heat is used to remove the water.

The water associated with the "wet laundry" after the rinse cycle may be divided into three categories. The first category includes loosely held surface water and that contained in the "mesh" formed in woven fabrics. The second category includes the water held primarily by capillary action between the strands of a twisted-fiber thread. The third category includes water held by capillary action in the pores of the fiber itself.

The surface water is easily removed from the wash load and would almost all drain off if given the opportunity. The water in the second category, that between the strands of a twisted-fiber thread, is harder to remove and is the water which is primarily removed in the extraction cycle. The water contained within the pores of the fiber is usually removed thermally in a dryer.

The most common extraction process is a centrifuging operation in which centrifugal forces exceed capillary forces, with dynamic equilibrium occurring when the applied centrifugal forces equal the fabric capillary forces.

The factors affecting water extraction include the spin speed, basket diameter, thickness of the fabric layer on the basket, physical properties of the fabric, temperature of the water, and the surface tension of the water.

The spin speed of the basket is a dominant factor, however. Most conventional top loader machines made in the United States spin at about 600 rpm,[16] but there is a range of speeds from 500 to 1000 rpm. A spin speed of 600 rpm will result in water retention in a cotton fabric equal to the weight of the fabric itself. With no extraction cycle, the water retained in the cotton fabric would weigh three to four times the weight of the fabric. For a cotton-polyester fabric, the water retention is reduced to about 65% of the fabric weight. For an all-synthetic fabric the water retention is less than 25% of the fabric weight.

Increasing the spin speed in the extraction cycle could indeed reduce the water retention of most fabrics significantly, but the cost of the washing machine would increase and wrinkles would form in many "no-iron" fabrics.

The development of an additive for use in the extraction cycle to decrease the capillary forces between the water and fabric presents a good opportunity to increase water extraction in conventional machines without causing wrinkles in the fabric. Also, changes in basket geometry may provide an opportunity for increased water extraction at conventional spin speeds.

4. THE CLOTHES DRYER

4.1 Energy Consumption

The process of drying laundry, unlike the process of cleaning it, is an inherently simple process. Most of the moisture remaining in the laundry as it emerges from the washer is removed thermally. If the laundry is line-dried, gravitational forces may overcome capillary forces and cause some liquid water to drip off the laundry, but the process is all thermal in an automatic dryer. Figure 9 depicts a typical dryer and its main component parts.

The theoretical minimum amount of energy needed to remove the entrained water is equal to the latent heat of vaporization of water, or about 1060 Btu/lb (0.68 kWh/kg) of water at 60°F (15°C), plus some sensible heat to raise the water to room temperature [10–20 Btu/lb (0.001–0.003 kWh/kg)].

In actual usage most dryers use from 1400 to 2500 Btu/lb (0.9 to 1.6 kWh/kg) to remove water from laundry, with electric dryers using about 10% less energy than gas dryers for similar loads.

Table 6 contains the results of tests of electric dryers conducted by *Consumer Research* magazine and published in their July 1975 issue.[15]

The inputs into a clothes dryer are the mechanical energy which tumbles the laundry and also induces airflow through the tumbling laundry, and the thermal energy which heats up the air going through the dryer. Typically about 90% of the energy into the dryer is thermal and the remaining 10% is mechanical.

The amount of air flowing through a typical large capacity electric dryer will average about 120 cfm (3397 liters/min) and will be heated to about 200°F (93.3°C) by a 5-kW heating element. The drum volume of a dryer may range from 4 to 8 ft^3 (113.2 to 226.4 liters) and will rotate at about 50 rpm. Most gas dryers have slightly higher heat inputs than electric dryers (20,000 Btu/h versus 17,065 Btu/h, or 5.86 kWh versus 5 kWh).

Tests conducted at NBS have estimated that the average electric dryer consumes 2.65 kWh per "standard load." Ninety-one percent of the

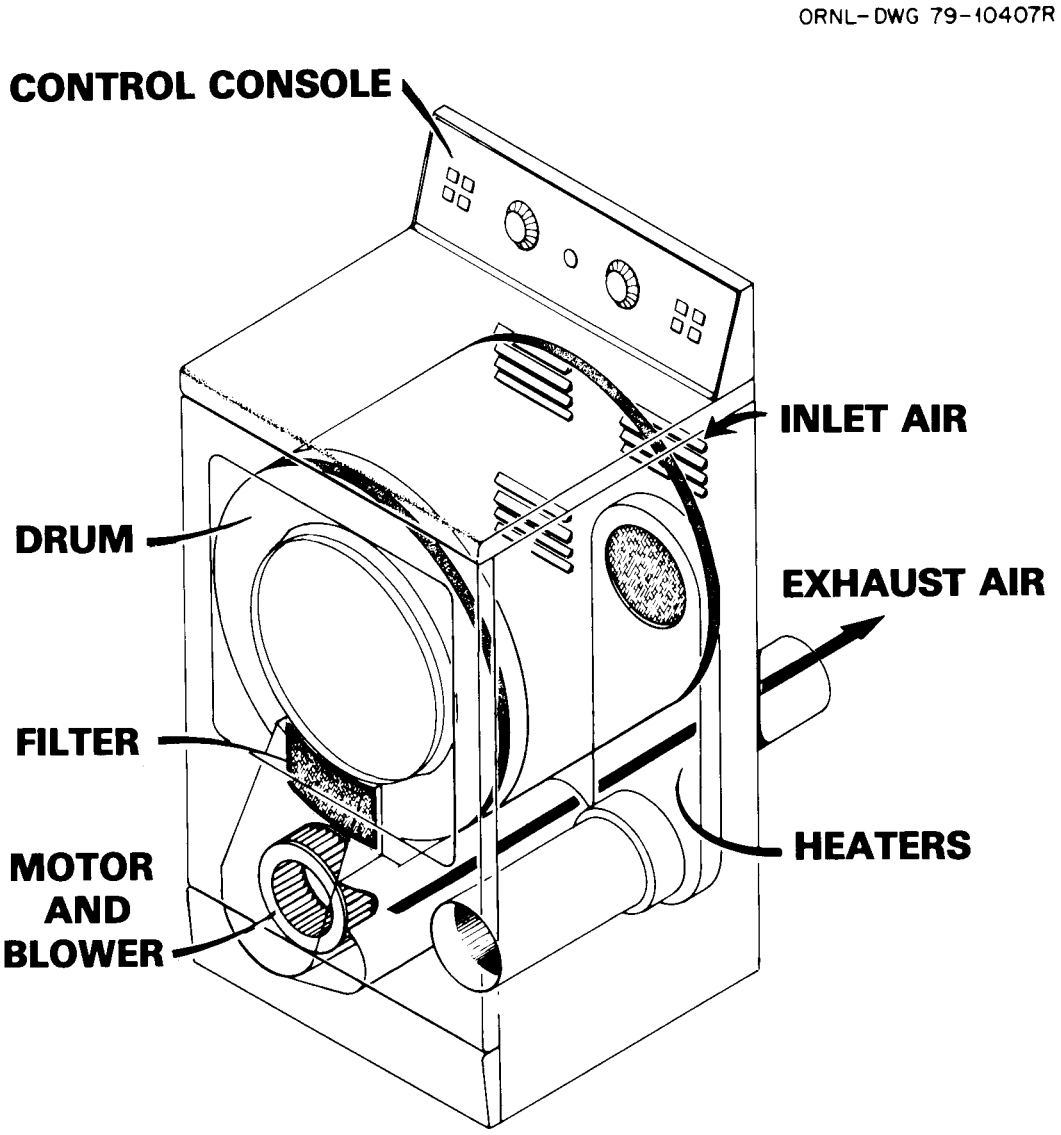

Fig. 9. Typical clothes dryer construction schematic.

Table 6. Performance summary of electric dryers[15]

Dryer	Drum vol. [ft^3 (ℓ)]	Energy efficiency index (lb H_2O removed per kWh)					
		6-lb load[a] timed	6-lb load[a] auto	12-lb load[a] timed	12-lb load[a] auto	18-lb load[a] timed	18-lb load[a] auto
GROUP 1 — STANDARD CAPACITY DRUM							
A	5.3 (150)	1.7	1.3	2.0	1.7	1.8	1.8
C	4.6 (130.2)	1.9	1.8	2.0	2.1	2.0	2.1
E	5.0 (141.5)	1.8	—	2.0	—	1.9	—
F	5.3 (150)	1.9	1.6	2.2	2.1	2.0	1.9
G	4.9 (138.7)	—	1.7	—	2.1	—	2.0
I	5.1 (144.3)	1.7	1.8	2.0	2.1	2.0	1.8
K	5.4 (152.8)	1.9	1.9	2.0	2.0	1.9	—
L	5.9 (167)	1.7	1.9	1.9	1.9	1.8	1.3
GROUP 2 — LARGE CAPACITY DRUM							
B	7.0 (198.1)	1.8	1.7	2.1	2.0	1.9	2.0
D	7.3 (206.6)	1.9	1.7	2.2	2.0	2.1	2.2
H	7.5 (212.3)	1.8	1.8	2.2	2.0	2.1	2.2
J	7.9 (223.6)	1.8	1.7	2.1	2.1	2.1	2.2
Average Group 1	5.2 (147.2)	1.8	1.7	2.0	2.0	1.9	1.8
Average Group 2	7.4 (209.4)	1.8	1.7	2.2	2.0	2.1	2.2

[a]Dry weight.

total, or 8430 Btu (2.57 kWh), is used to heat the drying air and the remaining 9%, or 0.18 kWh, is used to power the blower, controls, and to tumble the load. The average gas dryer uses 10,200 Btu (10.8 million J) to dry the same "standard load" and also requires 0.21 kWh of electricity to power the blower, controls, and to tumble the load. Standing pilots use about 350 Btu/h (3.7×10^5 J/h) of gas (3 mcf per year).[17] This is about 40% of the total gas dryer usage. Standing pilots should be removed from all gas dryers and replaced with intermittent ignition devices.

DOE test procedures specify maximum heat input, even though most dryers usually come with three or more temperature settings — normal, low, and air only. Use of the low setting will cause a reduction in energy consumption, but will increase the drying time.

The DOE test procedure for clothes dryers is specified in AHAM standards HLD-1 and HLD-2EC-1975. The test consists of dampening a 7-lb (3.2-kg) standard "bone dry" load of test clothes (50% cotton, 50% polyester) until the moisture content is 65% of the "bone dry" weight. The test dryer is located in a test room maintained at 75 ±3°F (23.9 ±1.7°C) and 50 ±10% relative humidity. The load is dried until the moisture content is 5% ±0.5 oz (14.2 g) of the "bone dry" weight.

The energy consumed by electric dryers is the average kWh measured in five tests. The energy consumed for gas dryers is the average gas consumption from five tests, including the electric energy input. The consumption for gas dryers with standing pilots also includes the gas used in 24 hours by the pilot.

The average monthly energy consumption is calculated by multiplying the average consumption per cycle by 34 cycles per month. Gas dryers with pilots are also assessed for the 30-day consumption of pilot gas.

The values of 2.65 kWh/load for electric dryers and 10,200 Btu/load plus 0.21 kWh/load for gas dryers are actually 20% higher than those measured by NBS. The additional 20% was added to the NBS laboratory measured value to approximate results in actual home dryer usage. Variations in the settings of the termination controls and actual equipment performance account for the increase.

Table 6 shows a general trend toward increasing dryer efficiency as the size of the load is increased from 6 to 12 lb (2.7 to 5.5 kg). There is a further slight increase in efficiency for those dryers with large capacity drums (group 2) as the load is further increased to 18 lb

(8.2 kg), while those dryers with standard capacity drums (group 1) show a slight decrease in efficiency for the larger loads. It is interesting to note that Procter and Gamble surveys[4] have found the average dryer load to weigh 5.4 lb (2.5 kg) when dry. Also, the NBS standard test for dryers specifies a 7-lb (3.2-kg) "bone-dry" dryer load. These data suggest that improvements in dryer geometry or a modulated heat input, i.e, less power input for lighter dryer loads, could provide an energy savings potential.

The dryer is designed so that it will match the washing machine in the time each takes to complete its cycle in order to minimize waiting time. Most of the dryers listed in Table 6 will evaporate water at a rate of 9 to 10 lb/h (4 to 4.5 kg/h) with a 5-lb (2.3-kg) dry-weight load which results in about a 40-min drying cycle including the cool-down period.

The rate of evaporation of the water in the drying cycle is fairly constant over the middle 70% of the cycle, with the rates at the beginning and the end of the cycle somewhat lower and more erratic.

4.2 Cycle Termination Controls

Three types of control systems are used to terminate the drying cycle — a manually set timer, an exhaust-temperature-actuated device, and a moisture-sensing (conductivity) device.

The manually set timer is the least expensive of the controls and is set to the time which the user thinks will dry the load. Many of the timers used on dryers have a considerable amount of backlash in their mechanism and hence are difficult to set precisely.

Temperature-actuated controls cost the consumer about $20 more than the manual timer. However, most dryers with either type of automatic control also contain a manual timer in addition to the automatic control. The temperature-actuated control initiates a timed shutdown when the exhaust temperature of the dryer attains a preset value. The time period of the shutdown is set by the user on the control dial when selecting the desired degree of dryness. The dryer heaters may cycle on

and off during the shutdown period depending on whether the temperature is above or below the preset value.

The moisture-sensing control is the most expensive type of control, costing the consumer about $50 more than the manual timer. It measures the conductivity of the fabrics down to the 30% moisture level,[18] at which point a user-adjustable timer completes the drying cycle in the same manner as in the temperature-actuated control.

One would expect that the two automatic-termination control systems should conserve energy over the manually set timer. However, the *Consumer's Research*[15] data from Table 6 as well as testing done by Consumer's Union[19,20] show that automatic-termination controls do not always save more energy than manually set timers. For those situations when relatively small loads are dried in standard or large capacity dryers, the automatic controls tend to overdry the load. As the size of the load increases relative to the drier drum size, the automatic controls will become the more energy-conserving device.

The temperature-actuated termination control is more sensitive to load size and also less energy efficient than the moisture-sensing control. Results of recent field testing by AHAM[21] showed that temperature-actuated termination controls can save from 0 to 10% over a manual timer, while moisture-sensing systems can save from 10 to 15% over a manual timer. NBS tests[18] also confirm these findings.

If a dryer load contains mixed fabrics such as heavy cotton towels and light synthetic shirts, the synthetics will dry before the cottons and drying efficiency will be reduced. Also, many automatic moisture-sensing devices may be fooled into either underdrying or overdrying the fabrics by such a load.

4.3 Effect of Dryers on House Heating and Cooling System

A study conducted by the Pacific Gas and Electric Company[22] showed that dryers operated in unheated areas of a house consumed 38% more energy in the winter than dryers operated in heated areas of the house. Also, the energy consumption for dryers located in conditioned spaces in a house increased about 15% from summer to winter. Presumably this

occurred because the space was held at a lower temperature during the heating season.

The Pacific Gas and Electric Company study suggests that a clothes dryer be located in a heated area of a house in the winter to save energy. However, the central heating system of the house must make up an amount of energy equal to that needed to heat any increased infiltration air (that air above the infiltration air without the dryer operating) from ambient to room temperature.

Most people have assumed that the infiltration rate of a dwelling with an operating outside-vented dryer is equal to the infiltration rate with the dryer off plus the vent rate of the dryer. Tests conducted by the author[23] at ORNL have shown this assumption to be in error, as the measured infiltration rate of a test dwelling with an operating outside-vented dryer usually increased by about 25 cfm (0.9 m^3/s) or less during typical Tennessee winter weather. The vent rate of the dryer used in this work was 120 cfm (4.3 m^3/s), while the usual infiltration rate of the house without an operating dryer was 190 cfm (6.8 m^3/s).

A simple calculation (see Appendix) will show that operating a dryer in a heated [70°F (21°C)] portion of a dwelling will save about 6% over operating the dryer in an unheated [55°F (12.8°C)] portion of the dwelling even when the penalty on the house heating system is added for the dryer in the heated space.

4.4 Dryer Exhaust Utilization

Another area offering obvious potential for energy conservation is the exhaust heat of the dryer. For most of the drying cycle the exhaust has a temperature of about 110°F (43°C) with a dew point in the range of 90°F (32°C). Venting the dryer indoors during the heating season could add both heat and moisture to a dwelling as well as that lint which is not caught (about 50%) by the lint filter of the dryer. Assuming the lint could be removed by the addition of a proper filter (a nylon mesh stocking is both effective and often used), the moisture in the exhaust must be well distributed or local condensation with ensuing mildew could

well be a problem. Gas-fired dryers also may contain harmful emissions such as carbon monoxide and oxides of nitrogen in their exhaust, so they should not be vented inside.

Simple tee-shaped devices with manually adjustable baffles and stocking-type filters are available which divert part of the exhaust indoors and vent the remainder outside. These devices can minimize condensation problems. However, the most convenient way to utilize the exhaust is to use it to preheat the inlet air to the dryer.

Some work along these lines has been investigated by NBS.[24] In this NBS work, a concentric pipe heat exchanger made from 4- and 6-in. (10- and 15-cm) "stovepipe" is used to preheat outdoor ambient air with the dryer exhaust.

Locating a dryer in the heated portion of a house and venting it to the outside can save about 6% of the dryer energy, and it seems that if the dryer exhaust can be used to preheat indoor house air as it enters the dryer, further savings may be realized. For example, if the inlet air must be heated from 70°F (21°C) to 200°F (93°C), an 8 F° (4.4 C°) preheat of the inlet air would reduce the energy consumption of the dryer an additional 5%.

The inlet air can be heated approximately 0.8 F° (0.5 C°) for each foot of 4-in. (10-cm) tubing used. Locating the heat exchanger in the base of the dryer makes such a device practical for both new and retrofit applications. It may be necessary to raise the overall height of the dryer if the heat exchanger is integral to the dryer. A retrofit unit could fit under present dryers.

A sample calculation in the Appendix shows that the exhaust gas leaving a preheater would be about 12 F° (6.7 C°) above its dew point, so heat exchanger surface fouling from condensation should not occur.

Such a device could save 65 kWh per year on the average (about $2.60/year at $0.04/kWh). A simple analysis shows that the consumer can afford to spend $29.58 for the heat exchanger and break even assuming he could get a real discount rate of 4% on his money over the 13-year life of the dryer and that electricity prices rise 2% above inflation.

5. ALTERNATE METHODS OF CLEANING AND DRYING

Several alternative techniques are available to wash and dry clothes which differ from those methods employed by current laundry equipment. Some of these techniques offer potential energy savings and will be briefly discussed in this section along with the problems inherent to their widespread use in the laundry industry.

Spray or jet washing can be effective provided the fabric is presented to the spray in a stretched-out position and not folded up. This approach requires high pressure to obtain effective spray patterns.

Ultrasonic washing is not very good for use on nonrigid media like laundry. Ultrasonic generation equipment is also expensive in the size required for handling laundry.

The use of a fluid other than water to clean clothes, as in dry cleaning, could work well, but regenerating the fluid is expensive and would require a high initial equipment investment. This method also has potential health and safety hazards depending on the fluid used.

Squeeze extraction works well, but is likely to leave wrinkles in easy-care fabrics.

Capillary extraction methods may also work well, but incorporating an effective, durable capillary medium into a washing machine poses problems.

Vacuum drying sounds attractive, but its cost and effectiveness, as well as equipment maintenance and reliability, are unknowns.

Microwave drying requires expensive equipment and will not work in the presence of metal zippers and buttons, etc.

A heat pump air-heated dryer is a possibility, but the operating temperatures, heat exchanger fouling, and air recirculation pose significant engineering and economic problems.

Combination washer-dryers have been marketed but have never worked too well because of their complexity. Also, a wash load needs about four times the volume to be properly dried compared to the volume the same load needs to be properly washed. Innovative engineering could possibly solve these problems, but the advantage to the user is not

evident unless convenience is improved, the combined cost is less, or space would be conserved.

The old wringer washer and present day suds saver model washers do save water and energy, but they require a separate wash tub. Also, the user must wash the cleaner clothes first and the dirtier clothes last. Bacterial contamination is also more of a possibility here than with machines which use the water only once. Currently, machines of these types comprise a very small part of the market.

Although the discussion herein has been very brief, it is believed that these innovative concepts are not likely to be economically practical approaches. Present-day laundry equipment will not change very much in the techniques employed to clean and dry laundry. As stated earlier in the Introduction, modern laundry equipment works well, is reliable, and is cost effective.

6. CONCLUSIONS AND RECOMMENDATIONS

Since the bulk of the energy consumed by automatic washers is contained in the hot water used by the washer, an immediate effort should be made to implement measures which will reduce washer hot water consumption. The elimination of the warm rinse option from washers is the most important step in bringing this about as approximately 2 kWh per wash load would be saved by changing from a warm rinse to a cold rinse. For those people currently using a hot-wash, warm-rinse cycle, the energy consumed per cycle would drop from roughly 7 kWh to 5 kWh. For those people using a warm-wash, warm-rinse cycle, energy consumption per cycle would drop from 5 kWh to 3 kWh. Other than clothes feeling warmer as they are taken from the washer, no benefits are obtained by using a warm water instead of a cold water rinse. The elimination of the warm rinse has the potential to reduce the primary energy consumption of the residential laundry process by 11.1%.

It appears that the elimination of the warm water rinse option will be accomplished in the near future either by voluntary industry action or in response to government regulations. Several machines presently on the market do not offer the warm rinse option.

Reducing the amount of water entering the washer will also conserve energy. Obviously, enough water must be in the machine to do an acceptable cleaning job. However, most users of automatic washers do not make effective use of the water level control, many of which are not very accurate at the low-level settings anyway. A built-in laundry-weighing scale integrated with an accurate water-level control could ensure that water conservation is being practiced. Since most of the washing machines sold are rated at about 18-lb (8.2-kg) capacity and the average wash load is about 6 lb (2.7 kg), a device of this type appears to be a sound economic investment for the consumer. An annual primary energy savings of 3.7×10^{13} Btu (3.9×10^{16} J) or 2.5% of the primary energy used in the residential laundry process is possible.

Lower temperature water can also reduce energy consumption in the wash cycle. Increased mechanical energy (lengthening the agitation time) and increased chemical action (adding more detergent) can replace

thermal energy (hot water) in many laundry situations and produce equally clean clothes at a cheaper cost than hot water washing. An evaluation of these effects made using Procter and Gamble data[5] showed, surprisingly, that a wash cycle using warm water, long agitation times, and relatively high detergent concentrations can be the most economical cycle to use. It can even be cheaper to use than cold water washing, which does not always produce acceptably clean clothes.

Although the data used to arrive at the above conclusions were from tests using Tide as the detergent, the use of other brands of detergents or cold water detergents would be expected to produce similar results, especially because most washing machines offer only cold, warm, and hot as temperature options.

A knowledgeable consumer can use the proper setting of an accurate water-level control with warm water, more detergent, and longer wash times to save money. However, all of these variables could be automatically optimized for the user by a "smart" integrated control. Such a control would need some user input — the weight of the laundry (supplied by an integral scale), the type of fabric, and the degree of soil (normal or heavy). Several push buttons on the washer could supply the data for the control which would then set the water level, temperature level (hot, warm, or cold), wash time, and also tell the user through a digital display how much detergent to add to the machine.

A "smart" integrated control for a washer is technically feasible and the potential to make it economically feasible exists. An energy-conserving and dollar-saving device would appear to be an attractive marketing feature.

The development of advanced controls for washing machines appears to make economic sense and offers a possible energy-conserving area which might be researched.

Another part of the washing machine cycle which has energy savings potential (only if a dryer is used with the washer) is the water-extraction cycle. Since it only takes about 0.5 kWh to remove 1 lb (0.45 kg) of water in the dryer, and the average load to a dryer contains about 5 lb (2.3 kg) of water, an opportunity for savings does indeed exist. Perhaps

the most promising way of increasing the efficiency of the water extraction cycle without putting wrinkles in the laundry is through the use of some yet to be discovered chemical additive dispensed during the rinse cycle. Also, modifications in the washer basket geometry may be able to bring about an increase in the extraction efficiency.

The efficiency of a dryer is highest at its design load and drops off as its loading is either above or below this point. The average dryer operates at about 55% efficiency. In most cases, however, the dryer is operated at about one-third its rated capacity, so most dryers do not utilize their built-in efficiency. This statement implies that most people purchase a dryer that is too large for their use.

Although automatic cycle-termination controls have the potential to minimize the overdrying of laundry, many have not done this very well in the past. Quality cycle-termination controls which operate with accuracy and precision over a broad range of dryer loadings could provide a gain of from 1 to 4% in efficiency for most dryers and thus offer an area of possible development. A major challenge would be to justify their added cost.

Standing pilots on gas dryers use about 350 Btu/h (370 J/h) and should be removed and replaced with intermittent ignition devices.

Many people assume that the outside venting of a dryer increases the infiltration air of a dwelling (and hence the load on the house space conditioning system) by an amount equal to the vent rate of the dryer. Recent tests at ORNL have shown that this assumption is not necessarily true and that energy can actually be saved in many cases by locating an outside-vented dryer in the heated portion of a dwelling rather than an unheated portion Based on preliminary observations, savings on the order of 5% appear possible.

A heat exchanger to preheat house inlet dryer air with the dryer exhaust is also a promising method of increasing dryer efficiency with at least break-even life-cycle economics. An approximate 5% energy savings is possible here, with the use of room inlet air minimizing problems with exhaust gas condensation in the heat exchanger. Since the economics of such a device appear somewhat favorable, its development could be pursued.

There is no doubt that a considerable amount of energy can be saved from increased efficiency in the motors used to run the washers and dryers. It seems that the initial cost the consumer pays for a high efficiency motor can be paid off over the life of the appliance, but not much sooner. A 10% increase in motor efficiency under all operating conditions would save about 10 kWh per appliance per year. Such savings are not economically attractive enough to create a strong market demand for higher efficiency washer and dryer motors. Further study of methods of improving motor efficiency is needed before any recommendation can be made.

REFERENCES

1. P. E. Roman, 1972 Base Year Energy Consumption and Efficiency Data, AHAM letter to James Smith of FEA, September 10, 1976.

2. National Bureau of Standards, *Appliance Energy Efficiency Improvement Target for Clothes Dryers for FEA*, March 16, 1977.

3. R. M. Goodman, "Reduced Energy Consumption of Automatic Washers — Benefits and Penalties," *Proc. Major Home Appliance Technology for Energy Conservation*, CONF-780238, pp. 173–79, February 27–March 1, 1978.

4. Procter and Gamble, letter to AHAM, April 24, 1975.

5. A. J. Fuchs, "Energy Conservation Water Temperature Effects in Laundering and Automatic Dishwashing," *Proc. Major Home Appliance Technology for Energy Conservation*, CONF-780238, pp. 180–85, February 27–March 1, 1978.

6. "Ten-Year Tables: A Look at Product Sales, Growth and Performance," *Merchandising*, pp. 34ff (March 1978).

7. Ruffin and Tippit, "Service Life Expectancy of Household Appliances: New Estimates from the U.S.D.A.," *Home Economics Research Journal* 3(3) (1975).

8. E. D. Morey, "Cool Water Laundering," *Proc. Technical Opportunities for Energy Conservation in Appliances*, CONF-7605139, p. 89, May 11, 1976.

9. Personal phone conversation with J. D. Hughes, Franklin Manufacturing Company, March 28, 1979.

10. D. L. Barney (General Electric), FEA Hearing on Energy Efficiency Improvement Targets for Clothes Washers, June 2, 1976.

11. P. D. Foley et al., *A Report to the Great Lakes Research Advisory Board of the International Joint Commission on the Health Implications of NTA*, International Joint Commission, Windsor, Ontario (May 1977).

12. J. Shapiro et al., *Final Report by the International Joint Commission Task Force on Ecological Effects of Non-Phosphate Detergent Builders*, International Joint Commission, Windsor, Ontario (December 1978).

13. C. Witt and J. Warden, *Textile Chemist and Colorist* 3(7): 55–58 (July 1971).

14. G. M. Ridenour, *A Bacteriological Study of Automatic Clothes Washing*, National Sanitation Foundation, 1952.

15. *Consumer Research*, July 1975.

16. J. G. Jacobsen, "A Laundry Equipment Review," *Proc. 27th National Home Appliance Conference*, AHAM, pp. 40–44, November 2–3, 1973.

17. J. D. Cox and H. Kornguth, "Appliance Energy Conservation Through the Application of Electric Ignition Systems," *Proc. Major Home Appliance Technology for Energy Conservation*, CONF-780238, pp. 255–64, February 27–March 1, 1978.

18. D. M. Strathearn, "Pull to Start," *Proc. 1970 Technical Conference on Household Equipment*, AHAM, pp. 41–48, November 18–20, 1970.

19. *Consumer Reports*, pp. 686–89, November 1975.

20. *Consumer Reports*, pp. 22–26, January 1979.

21. Personal phone conversation with W. H. Blanck, AHAM, June 29, 1979.

22. Residential Electric Air Conditioning Load Research Project, Pacific Gas and Electric Company, February 1965.

23. W. P. Levins, report to be published.

24. A. J. Fowell, "Clothes Dryer Air Exchange," *Proc. Major Home Appliance Technology for Energy Conservation*, CONF-780238, pp. 168–72, February 27–March 1, 1978.

APPENDIX

Reference Information and Sample Calculations

CONTENTS

Page

Table A-1. Washing machine and dryer information 53

Table A-2. Washing machine and dryer motor power consumption . . . 53

Table A-3. Estimate of washing machine and dryer energy consumption, 1978 54

Fig. A-1. Wash temperature vs wash time for constant cleaning . . 55

Table A-4. Derived data from Procter and Gamble plots,[5] data used for Fig. 7 56

Table A-5. Derived data from Procter and Gamble plots,[5] data used for Fig. 8 57

Table A-6. Performance summary of electric dryers tested by *Consumer Research*, July 1975 58

Calculation of estimated primary energy savings from elimination of warm water rinse 60

Calculation of estimated primary energy savings resulting from proper use of water level control on washing machine 62

Calculation of savings from improvements in washer motor efficiency 63

Calculation of energy saved by vented dryer located in heated space 65

Sample calculation for dryer inlet air preheater 66

Table A-1. Washing machine and dryer information[6]

Number of wired homes in the U.S.	79,889,000
Number of washing machines	55,619,000
Number of dryers	44,991,000
Gas	13,534,483
Electric	31,456,517
Ratio of electric to gas dryers	2.32
Percent of wired homes with washers	73.3
Percent of wired homes with dryers	59.3
Electric	41.5
Gas	17.8
Ratio of homes with dryers to homes with washers	0.81
Number of water heaters	68,831,323
Gas	43,939,731
Electric	24,891,592
Ratio of electric to gas water heaters	0.57

Table A-2. Washing machine and dryer motor power consumption

	Washer	Dryer	Total
Unit motor consumption[a] (kWh/load)	0.22	0.18	
Number of loads/unit/year	408	408	
kWh/year/unit	89.76	73.44	
Number of units	55,619,000	44,991,000	100,610,000
Total kWh/year consumption[a]	4.99×10^9	3.30×10^9	8.29×10^9
Primary Btu/year[b]	57.6×10^{12}	38.1×10^{12}	95.7×10^{12}
Primary J/year[b]	60.8×10^{15}	40.2×10^{15}	10.1×10^{16}

[a]Consumption at point of use.

[b]Includes 29.7% electric generation and transmission efficiency.

Table A-3. Estimate of washing machine and dryer energy consumption, 1978

	Washer	Dryer			Total
		Electric	Gas[a]	Total	
Unit power consumption (kWh/load)[b]	5.06	2.65	3.17	2.81	
Number of loads/unit/year	408	408	408	408	
kWh/year/unit	2064	1081	1293	1146	
Number of units	55.6×10^6	31.5×10^6	13.5×10^6	45.0×10^6	100.6×10^6
Total kWh/year[b]	114.8×10^9	34.0×10^9	17.6×10^9	51.6×10^9	166.4×10^9
Total motor kWh/year[b]	4.99×10^9	2.31×10^9	0.99×10^9	3.30×10^9	8.29×10^9
Total water heating (kWh/year)[b]	109.8×10^9				109.8×10^9
Total electric water heating (kWh/year)[b]	39.7×10^9				39.7×10^9
Total gas water heating (kWh/year)[b]	70.1×10^9				70.1×10^9
Total primary electric water heating (kWh/year)[b,c]	133.7×10^9				133.7×10^9
Total primary electric water heating (kWh/year)[c,d]	161.0×10^9				161.0×10^9
Total primary gas water heating (kWh/year)[d]	140.2×10^9				140.2×10^9
Total primary water heating (kWh/year)[b,c]	203.8×10^9				203.8×10^9
Total primary water heating (kWh/year)[c,d]	301.2×10^9				301.2×10^9
Total air heating (kWh/year)[b]		31.7×10^9	16.6×10^9	48.3×10^9	48.3×10^9
Total primary air heating (kWh/year)[b,c]		106.7×10^9	16.6×10^9	123.7×10^9	123.7×10^9
Total primary motor (kWh/year)[b,c]	16.80×10^9	7.78×10^9	3.33×10^9	11.11×10^9	27.91×10^9
Total primary consumption (kWh/year)[b,c]	220.6×10^9	114.5×10^9	19.9×10^9	134.4×10^9	355.0×10^9
Total primary consumption (kWh/year)[b,c,d]	318.0×10^9	114.5×10^9	19.9×10^9	134.4×10^9	452.4×10^9
Total primary consumption (Btu/year)[b,c]	0.752×10^{15}	0.391×10^{15}	0.068×10^{15}	0.459×10^{15}	1.211×10^{15}
Total primary consumption (Btu/year)[b,c,d]	1.085×10^{15}	0.391×10^{15}	0.068×10^{15}	0.459×10^{15}	1.544×10^{15}
Total primary consumption (J/year)[b,c]	0.793×10^{18}	0.413×10^{18}	0.071×10^{18}	0.484×10^{18}	1.278×10^{18}
Total primary consumption (J/year)[b,c,d]	1.145×10^{18}	0.413×10^{18}	0.071×10^{18}	0.484×10^{18}	1.629×10^{18}

[a]Does not include standing pilot; inlet gas heating value converted to kWh.

[b]Point of use. One hundred percent efficient water heating; other uses based on measured values.

[c]Includes 29.7% electric generation and transmission; gas transmission and distribution losses taken to be zero.

[d]Includes water heater efficiency (83% electric, 50% gas).

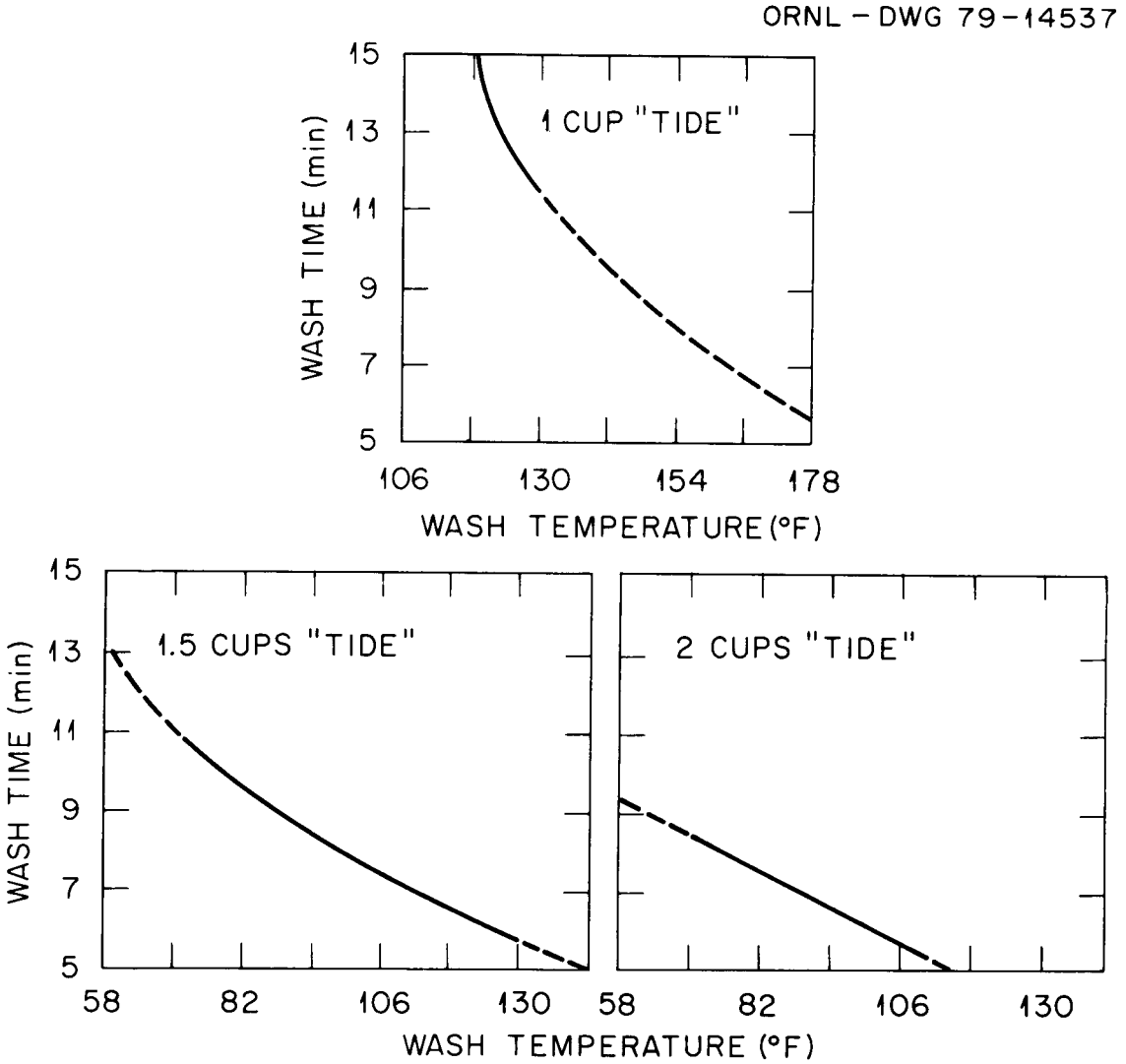

Fig. A-1. Wash temperature vs wash time for constant cleaning (only line J of Ref. 5 data is plotted).

Table A-4. Derived data from Procter and Gamble plots,[5] data used for Fig. 7

	Detergent volume		
	1 cup (0.24 ℓ)	1 1/2 cups (0.35 ℓ)	2 cups (0.47 ℓ)
5-MIN AGITATION			
Temperature, °F (°C)	181.6 (83.1)	142 (61.1)	118 (47.8)
Cost			
Mechanical	0.17¢	0.17¢	0.17¢
Water	25.3	17.4	12.6
Detergent	8.75	13.13	17.5
TOTAL	34.22¢	30.70¢	30.27¢
7-MIN AGITATION			
Temperature, °F (°C)	162.4 (72.4)	108.4 (42.4)	85.6 (29.8)
Cost			
Mechanical	0.23¢	0.23¢	0.23¢
Water	21.48	10.68	6.12
Detergent	8.75	13.13	17.5
TOTAL	30.46¢	24.04¢	23.85¢
9-MIN AGITATION			
Temperature, °F (°C)	145.6 (63.1)	85 (29.4)	61 (16.1)
Cost			
Mechanical	0.30¢	0.30¢	0.30¢
Water	18.12	6.0	1.2
Detergent	8.75	13.13	17.5
TOTAL	27.17¢	19.43¢	19.00¢
11-MIN AGITATION			
Temperature, °F (°C)	132 (55.6)	66 (18.9)	—
Cost			
Mechanical	0.37¢	0.37¢	0.37¢
Water	15.4	2.2	0
Detergent	8.75	13.13	17.5
TOTAL	24.52¢	15.70¢	17.87¢
13-MIN AGITATION			
Temperature, °F (°C)	122.8 (50.4)	58 (14.4)	—
Cost			
Mechanical	0.43¢	0.43¢	0.43¢
Water	13.56	0.60	0
Detergent	8.75	13.13	17.5
TOTAL	22.74¢	14.16¢	17.93¢

Table A-5. Derived data from Procter and Gamble plots,[5] data used for Fig. 8

	1 cup (0.24 ℓ)	1 1/2 cups (0.35 ℓ)	2 cups (0.47 ℓ)
	5-MIN AGITATION		
Temperature, °F (°C)	181.6 (83.1)	142 (61.1)	118 (47.8)
Cost			
Mechanical	0.17¢	0.17¢	0.17¢
Water	6.33	4.35	3.15
Detergent	8.75	13.13	17.5
TOTAL	15.25¢	17.65¢	20.82¢
	7-MIN AGITATION		
Temperature, °F (°C)	162.4 (72.4)	108.4 (42.4)	85.6 (29.8)
Cost			
Mechanical	0.23¢	0.23¢	0.23¢
Water	5.37	2.67	1.53
Detergent	8.75	13.13	17.5
TOTAL	14.35¢	16.03¢	19.26¢
	9-MIN AGITATION		
Temperature, °F (°C)	145.6 (63.1)	85 (29.4)	61 (16.1)
Cost			
Mechanical	0.30¢	0.30¢	0.30¢
Water	4.53	1.50	0.3
Detergent	8.75	13.13	17.5
TOTAL	13.58¢	14.93¢	18.10¢
	11-MIN AGITATION		
Temperature, °F (°C)	132 (55.6)	66 (18.9)	—
Cost			
Mechanical	0.37¢	0.37¢	0.37¢
Water	3.85	0.55	0
Detergent	8.75	13.13	17.5
TOTAL	12.97¢	14.05¢	17.87¢
	13-MIN AGITATION		
Temperature, °F (°C)	122.8 (50.4)	58 (14.4)	—
Cost			
Mechanical	0.43¢	0.43¢	0.43¢
Water	3.39	0.15	0
Detergent	8.75	13.13	17.5
TOTAL	12.57¢	13.71¢	17.93¢

Table A-6. Performance summary of electric dryers tested by *Consumer Research*, July 1975[a]

Dryer	Claimed capacity [lb (kg)]	Drum volume [ft³ (ℓ)]	Calculated capacity for perm. press [lb (kg)]	Test load [lb (kg)]	Dryer setting (reg. temp.)	Drying time (min)	Maximum temp. [°F (°C)], clothes	kWh per load	Evap. rate [lb/min (kg/min)]	Efficiency index, lb (kg) water rem./kWh
A	None claimed	5.3 (150)	6.9 (3.1)	6.0 (2.7)	Timed	38.5	160 (71.1)	3.0	0.14 (0.06)	1.7 (0.8)
				6.0 (2.7)	Auto	75.6	160 (71.1)	4.2	0.07 (0.03)	1.3 (0.6)
				12.0 (5.4)	Timed	76.0	165 (73.9)	5.3	0.14 (0.06)	2.0 (0.9)
				12.0 (5.4)	Auto	110	170 (76.7)	6.2	0.10 (0.05)	1.7 (0.8)
				18.0 (8.2)	Timed	135	160 (71.1)	8.8	0.12 (0.05)	1.8 (0.8)
				18.0 (8.2)	Auto	144	165 (73.9)	8.8	0.11 (0.05)	1.8 (0.8)
B	18 (11)	7.0 (198.1)	9.1 (4.1)	6.0 (2.7)	Timed	31.0	190 (87.8)	2.9	0.17 (0.08)	1.8 (0.8)
				6.0 (2.7)	Auto	46.3	180 (82.2)	3.2	0.12 (0.05)	1.7 (0.8)
				12.0 (5.4)	Timed	57.0	190 (87.8)	5.1	0.18 (0.08)	2.1 (1)
				12.0 (5.4)	Auto	72.5	200 (93.3)	5.5	0.15 (0.07)	2.0 (0.9)
				18.0 (8.2)	Timed	105	200 (93.3)	8.2	0.15 (0.07)	1.9 (0.9)
				18.0 (8.2)	Auto	102	220 (104.4)	7.6	0.15 (0.07)	2.0 (0.9)
C	None claimed	4.6 (130.2)	6.0 (2.7)	6.0 (2.7)	Timed	35.0	160 (71.1)	2.8	0.15 (0.07)	1.9 (0.9)
				6.0 (2.7)	Auto	47.8	170 (76.7)	3.0	0.11 (0.05)	1.8 (0.8)
				12.0 (5.4)	Timed	70.0	200 (93.3)	5.3	0.15 (0.07)	2.0 (0.9)
				12.0 (5.4)	Auto	72.4	240 (115.6)	5.2	0.15 (0.07)	2.1 (1)
				18.0 (8.2)	Timed	105	240 (115.6)	7.8	0.15 (0.07)	2.0 (0.9)
				18.0 (8.2)	Auto	94.4	220 (104.4)	7.3	0.16 (0.07)	2.1 (1)
D	18 (11)	7.3 (206.6)	9.5 (4.3)	6.0 (2.7)	Timed	32.0	150 (65.6)	2.8	0.16 (0.07)	1.9 (0.9)
				6.0 (2.7)	Auto	46.2	170 (76.7)	3.3	0.12 (0.05)	1.7 (0.8)
				12.0 (5.4)	Timed	54.0	190 (87.8)	4.8	0.19 (0.09)	2.2 (1)
				12.0 (5.4)	Auto	69.5	190 (87.8)	5.5	0.15 (0.07)	2.0 (1)
				18.0 (8.2)	Timed	88.0	190 (87.8)	7.5	0.18 (0.08)	2.1 (1)
				18.0 (8.2)	Auto	88.6	190 (87.8)	7.4	0.18 (0.08)	2.2 (1)
E	None claimed	5.0 (141.5)	6.5 (2.9)	6.0 (2.7)	Timed	34.0	160 (71.1)	2.9	0.15 (0.07)	1.8 (0.8)
				12.0 (5.4)	Timed	60.0	160 (71.1)	5.3	0.17 (0.08)	2.0 (1)
				18.0 (8.2)	Timed	105	240 (115.6)	8.4	0.15 (0.07)	1.9 (0.9)
F	None claimed	5.3 (150)	6.9 (3.1)	6.0 (2.7)	Timed	32.0	190 (87.8)	2.7	0.15 (0.07)	1.9 (0.9)
				6.0 (2.7)	Auto	46.6	200 (93.3)	3.4	0.12 (0.05)	1.6 (0.9)
				12.0 (5.4)	Timed	60.0	240 (115.6)	4.8	0.17 (0.08)	2.2 (1)
				12.0 (5.4)	Auto	66.1	220 (104.4)	5.0	0.16 (0.07)	2.1 (1)
				18.0 (8.2)	Timed	105	240 (115.6)	7.9	0.15 (0.07)	2.0 (1)
				18.0 (8.2)	Auto	122	240 (115.6)	8.5	0.13 (0.06)	1.9 (0.9)

[a]Reprinted with permission.

Table A-6. (continued)

Dryer	Claimed capacity [lb (kg)]	Drum volume [ft^3 (ℓ)]	Calculated capacity for perm. press [lb (kg)]	Test load (lb (kg)]	Dryer setting (reg. temp.)	Drying time (min)	Maximum temp. [°F (°C)], clothes	kWh per load	Evap. rate [lb/min (kg/min)]	Efficiency index, lb (kg) water rem./kWh
G	None claimed	4.9 (138.7)	6.4 (2.9)	6.0 (2.7)	Auto	40.0	200 (93.3)	3.2	0.13 (0.06)	1.7 (0.8)
				12.0 (5.4)	Auto	61.1	190 (87.8)	5.1	0.17 (0.08)	2.1 (1)
				18.0 (8.2)	Auto	85.7	220 (104.4)	6.9	0.16 (0.07)	2.0 (0.9)
H	20 (9.1)	7.5 (212.3)	9.8 (4.4)	6.0 (2.7)	Timed	33.0	190 (87.8)	2.9	0.16 (0.07)	1.8 (0.8)
				6.0 (2.7)	Auto	38.0	190 (87.8)	3.0	0.14 (0.06)	1.8 (0.8)
				12.0 (5.4)	Timed	53.0	200 (93.3)	4.8	0.20 (0.09)	2.2 (1)
				12.0 (5.4)	Auto	63.5	220 (104.4)	5.3	0.17 (0.08)	2.0 (0.9)
				18.0 (8.2)	Timed	80.0	200 (93.3)	7.3	0.20 (0.09)	2.1 (1)
				18.0 (8.2)	Auto	85.4	220 (104.4)	7.3	0.19 (0.09)	2.2 (1)
				20.0 (9.1)	Timed	91.0	220 (104.4)	8.1	0.19 (0.09)	2.2 (1)
				20.0 (9.1)	Auto	94.8	240 (115.6)	8.1	0.18 (0.08)	2.2 (1)
I	None claimed	5.1 (144.3)	6.6 (3.0)	6.0 (2.7)	Timed	35.2	170 (76.7)	3.0	0.15 (0.07)	1.7 (0.8)
				6.0 (2.7)	Auto	38.4	170 (76.7)	3.0	0.14 (0.06)	1.8 (0.8)
				12.0 (5.4)	Timed	60.0	220 (104.4)	5.3	0.17 (0.08)	2.0 (0.9)
				12.0 (5.4)	Auto	61.7	240 (115.6)	5.1	0.17 (0.08)	2.1 (1)
				18.0 (8.2)	Timed	92.0	240 (115.6)	7.8	0.17 (0.08)	2.0 (0.9)
				18.0 (8.2)	Auto	113	240 (115.6)	8.8	0.14 (0.06)	1.8 (0.8)
J	20 (9.1)	7.9 (223.6)	10.3 (4.7)	6.0 (2.7)	Timed	34.0	170 (76.7)	2.9	0.16 (0.07)	1.8 (0.8)
				6.0 (2.7)	Auto	38.8	190 (87.8)	3.1	0.14 (0.06)	1.7 (0.8)
				12.0 (5.4)	Timed	55.0	200 (93.3)	5.0	0.19 (0.09)	2.1 (1)
				12.0 (5.4)	Auto	62.6	220 (104.4)	5.2	0.17 (0.08)	2.1 (1)
				18.0 (8.2)	Timed	82.0	220 (104.4)	7.5	0.19 (0.09)	2.1 (1)
				18.0 (8.2)	Auto	115	180 (82.2)	7.3	0.14 (0.06)	2.2 (1)
				20.0 (9.1)	Timed	92.0	220 (104.4)	8.0	0.19 (0.09)	2.2 (1)
				20.0 (9.1)	Auto	93.4	220 (104.4)	8.1	0.19 (0.09)	2.2 (1)
K	None claimed	5.4 (152.8)	7.0 (3.2)	6.0 (2.7)	Timed	31.0	220 (104.4)	2.8	0.17 (0.08)	1.9 (0.9)
				6.0 (2.7)	Auto	39.9	240 (115.6)	2.9	0.14 (0.06)	1.9 (0.9)
				12.0 (5.4)	Timed	63.0	240 (115.6)	5.2	0.17 (0.08)	2.0 (0.9)
				12.0 (5.4)	Auto	68.5	240 (115.6)	5.3	0.16 (0.07)	2.0 (0.9)
				18.0 (8.2)	Timed	120	240 (115.6)	8.2	0.13 (0.06)	1.9 (0.9)
				18.0 (8.2)	Auto					
L	None claimed	5.9 (167.0)	7.7 (3.5)	6.0 (2.7)	Timed	34.0	170 (76.7)	3.1	0.15 (0.07)	1.7 (0.8)
				6.0 (2.7)	Auto	37.6	170 (76.7)	2.8	0.14 (0.06)	1.9 (0.9)
				12.0 (5.4)	Timed	62.0	190 (87.8)	5.5	0.17 (0.08)	1.9 (0.9)
				12.0 (5.4)	Auto	70.3	190 (87.8)	5.7	0.16 (0.07)	1.9 (0.9)
				18.0 (8.2)	Timed	105	190 (87.8)	8.6	0.15 (0.07)	1.8 (0.8)
				18.0 (8.2)	Auto	108	190 (87.8)	8.5	0.14 (0.06)	1.3 (0.6)

CALCULATION OF ESTIMATED PRIMARY ENERGY SAVINGS FROM ELIMINATION OF WARM WATER RINSE

ASSUMPTIONS AND DATA USED:

from page 30
warm rinse cycle adds 2.38 kWh/load to input into washing machine at full load setting, but deletes 0.99 kWh/load from dryer input

from page 14
50% of wash loads presently have a warm rinse
No. loads per year per machine using warm rinse
$= 408 \times 0.5 = 204$.

from page 16
30% of wash loads are done using water level control at less than maximum setting (assume setting at medium)

Range of water level control is 75% of maximum to 100% of maximum

from Table A-1 (some data calculated)

No. washing machines	55.6×10^6
No. homes with electric water heater and washer	20.1×10^6
No. homes with gas water heater and washer	35.5×10^6
No. homes with washer and gas dryer	13.5×10^6
No. homes with washer and electric dryer	31.5×10^6
Electric water heater service efficiency	0.80
Gas water heater service efficiency	0.50
Electric generation and transmission efficiency from primary fuel	0.297

Weighted energy input savings per load accounting for different water level settings in washer

$$2.38 \frac{\text{kWh}}{\text{load}} [0.70 + 0.30 \times 0.875] = 2.29 \frac{\text{kWh}}{\text{load}}$$

U.S. Annual Primary Energy savings for washers

Homes with electric water heater and washer

$$20.1 \times 10^6 \times 204 \times \frac{2.29}{0.297 \times 0.8} \times 3413 = 1.35 \times 10^{14} \text{ Btu } (1.42 \times 10^{17} \text{ J})$$

Homes with gas water heater and washer

$$35.5 \times 10^6 \times 204 \times \frac{2.29}{0.5} \times 3413 = 1.13 \times 10^{14} \text{ Btu } (1.19 \times 10^{17} \text{ J})$$

Total savings $= 2.48 \times 10^{14}$ Btu/yr $(2.62 \times 10^{17}$ J/yr)

U. S. Additional Annual Primary Energy input to dryers:

Homes with washer and gas dryer

$13.5 \times 10^6 \times 204 \times 0.99 \times 3413 = 9.31 \times 10^{12}$ Btu (9.82×10^{15} J)

Homes with washer and electric dryer

$31.5 \times 10^6 \times 204 \times \frac{0.99}{0.297} \times 3413 = 7.31 \times 10^{13}$ Btu (7.71×10^{16} J)

Total additional primary energy = 8.24×10^{13} Btu/yr (8.69×10^{16} J/yr)

NET U.S. PRIMARY SAVINGS = 1.66×10^{14} Btu/yr (1.75×10^{17} J/yr)

This is equal to a reduction of $1.66 \times 10^{14}/1.5 \times 10^{15} \times 100 = 11.1\%$ of the total primary energy consumed in the laundry process.

CALCULATION OF ESTIMATED PRIMARY ENERGY SAVINGS RESULTING FROM PROPER USE OF WATER LEVEL CONTROL ON WASHING MACHINE

ASSUMPTIONS AND DATA USED:
Cold rinse only used

from page 14
35% of all wash loads use hot water
50% of all wash loads use warm water

from page 16
70% of wash loads done not using water level control

Assume half of the above 70% could use water level control at mid-setting
Range of water level control 15 gal (56.8 liters) (minimum setting) to 20 gal (75.7 liters) (maximum setting)

From Table A-1

No. washing machines	55.6×10^6
No. homes with electric water heater and washer	20.1×10^6
No. homes with gas water heater and washer	35.5×10^6
Electric water heater service efficiency	0.80
Gas water heater service efficiency	0.50
Electric generation and transmission efficiency from primary fuel	0.297
No. wash loads done per year per washing machine	408
Average temperature rise of water in water heater	80 F° (44.4 C°)

U. S. Annual Primary Energy Savings

for homes with electric water heater and washer:

$$20.1 \times 10^6 \times 408 \times 0.70 \times 0.50 \times \frac{2.5 \times 8.34 \times 80}{0.8 \times 0.297} = 2.02 \times 10^{13} \text{ Btu}$$

$$(2.13 \times 10^{16} \text{ J})$$

for homes with gas water heater and washer:

$$35.5 \times 10^6 \times 408 \times 0.70 \times 0.50 \times \frac{2.5 \times 8.34 \times 80}{0.50} = 1.69 \times 10^{13} \text{ Btu}$$

$$(1.78 \times 10^{16} \text{ J})$$

TOTAL = 3.71×10^{13} Btu (3.91×10^{16} J) or 2.47% of the primary laundry energy.

CALCULATION OF SAVINGS FROM IMPROVEMENTS IN WASHER MOTOR EFFICIENCY

Assumptions:

Present kWh/load	0.22
Number of loads/year	408
Annual kWh consumption	89.76 (if motor is 53% efficient, useful output is 47.57 kWh)
Present electricity cost ($/kWh)	0.04

Summary:

Motor efficiency	53	55	57	60	63	65
Annual consumption (kWh)	89.76	86.49	83.46	79.29	75.51	73.18
Annual savings over 53% (kWh)	0	3.27	6.30	10.47	14.25	16.58
Annual savings over 53% at 0.04 $/kWh ($)	0	0.13	0.25	0.42	0.57	0.66
Present worth in 11 years* ($)	0	1.28	2.45	4.12	5.59	6.47
Total national primary fuel savings (10^{12} Btu/yr) (1.06×10^{15} J/yr)	0	2.1	4.0	6.7	9.1	10.6

*"Present worth in 11 years" is the amount of additional money the consumer could spend at the time of purchase and be paid back by the operating cost savings of the higher-efficiency motor over the lifetime of the washer. It is calculated from:

$$S_N = P \times c\left(\frac{1 + r_e}{r_d - r_e}\right)\left[\frac{(1 + r_d)^N - (1 + r_e)^N}{(1 + r_d)^N}\right],$$

where

S_N = present worth of P kWh/yr in dollars after N years,

P = annual kWh savings from increased motor efficiency,

c = present cost of power,

r_d = effective discount rate above inflation,

r_e = effective escalation rate of electricity above inflation,

N = time period (years).

This equation is used in the *Energy Division Annual Report* (ORNL-5250,

April 1977, p. 157) and was derived by summing the economic power series equations and relating costs back to present-day dollars. For the case of the washing machine motor, assume N = 11 years, r_d = 4% (above inflation rate), and r_e = 2% (above inflation rate).

$$S_N = P \times c\left(\frac{1 + 0.02}{0.02}\right)\left[\frac{(1 + 0.04)^{11} - (1 + 0.02)^{11}}{(1 + 0.04)^{11}}\right]$$

$$= 9.81 \times P \times c \ .$$

CALCULATION OF ENERGY SAVED BY VENTED DRYER LOCATED IN HEATED SPACE

Assume:

outside temperature = 32°F,

inside heated space temperature = 70°F,

inside unheated space temperature = 55°F.

Typical measured data:

house infiltration rate with dryer on = 215 cfm,

house infiltration rate with dryer off = 190 cfm.

Btu required to heat 120 cfm* of air from 55°F to 180°F:

$$q_1 = 120\ \text{ft}^3/\text{min} \times 0.075\ \text{lb/ft}^3 \times 0.24\ \text{Btu/lb}\cdot\text{F}^\circ \times (180 - 55)\text{F}^\circ$$
$$= 270\ \text{Btu/min}\ .$$

Btu required to heat 120 cfm* of air from 70°F to 180°F:

$$q_2 = 120\ \text{ft}^3/\text{min} \times 0.075\ \text{lb/ft}^3 \times 0.24\ \text{Btu/lb}\cdot\text{F}^\circ \times (180 - 70)\text{F}^\circ$$
$$= 237.6\ \text{Btu/min}\ .$$

Btu required to heat 25 cfm* infiltration air from 32°F to 70°F:

$$q_3 = 25\ \text{ft}^3/\text{min} \times 0.075\ \text{lb/ft}^3 \times 0.24\ \text{Btu/lb}\cdot\text{F}^\circ \times (70 - 32)\text{F}^\circ$$
$$= 17.1\ \text{Btu/min}\ .$$

Total Btu required by dryer in heated space:

$$q_2 + q_3 = 237.6 + 17.1 = 254.7\ \text{Btu/min}\ .$$

$$\text{Percent savings} = 100\left(1 - \frac{q_2 + q_3}{q_1}\right) = 100\left(1 - \frac{254.7}{270}\right) = 5.7\%\ .$$

*Nominal cfm at 70°F.

SAMPLE CALCULATION FOR DRYER INLET AIR PREHEATER

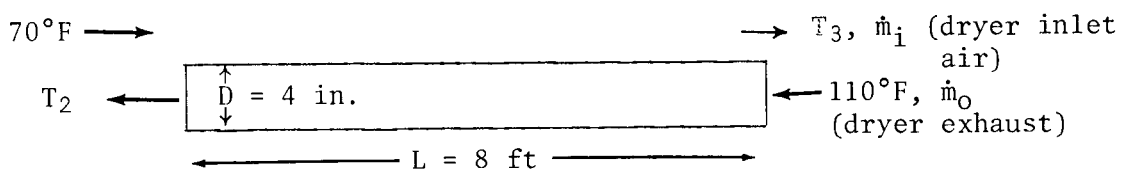

Since $\dot{m}_i = \dot{m}_o$, $110 - T_3 = T_2 - 70$, or $T_2 = 180 - T_3$.

Assume:

$h = 3$ Btu/hr·ft^2·F°,

$\dot{m}_i = \dot{m}_o = 120$ cfm.

Area (surface) of 4 in. pipe = $\pi DL = \pi \times 4/12 \times 8 = 8.38$ ft^2.

Using $hA\Delta T = \dot{m}C_p\Delta T_i$,

$$3 \times 8.38 \times \frac{(110 - T_3) + (T_2 - 70)}{2}$$

$$= 120 \times 0.075 \times 60 \times 0.24 \times (T_3 - 70) \ ;$$

$T_3 = 76.5$°F, and $T_2 = 103.5$°F.

If the inlet air is ordinarily heated from 70 to 200°F in the dryer, the use of the inlet air preheater could reduce the energy consumed to heat the air by:

$$100 \times 1 - \left(\frac{200 - 76.5}{200 - 70}\right) = 5\%.$$

INTERNAL DISTRIBUTION

1. L. A. Abbatiello
2. S. I. Auerbach
3. R. W. Barnes
4. D. J. Bjornstad
5. R. S. Carlsmith
6. C. V. Chester
7. W. L. Cooper, Jr.
8. K. R. Corum
9. F. A. Creswick
10. R. M. Davis
11. R. D. Ellison
12. P. D. Fairchild
13. W. Fulkerson
14. V. O. Haynes
15. E. A. Hirst
16. D. E. Holt
17. C. C. Hopkins
18. P. L. Johnson
19. S. I. Kaplan
20. D. Kaserman
21. W. P. Levins
22. R. S. Livingston
23. A. S. Loebl
24. H. M. Long
25–44. P. M. Love
45. J. W. Michel
46. R. E. Minturn
47. W. R. Mixon
48. J. C. Moyers
49. D. L. O'Neal
50. A. M. Perry
51. H. Postma
52. M. W. Rosenthal
53. T. H. Row
54. D. B. Trauger
55. J. L. Trimble
56. D. J. Walukas
57. T. J. Wilbanks
58. A. Zucker
59. Biology Division Library
60–61. Central Research Library
62. Document Reference Section
63–64. Energy Information Library
65. Laboratory Records – RC
66–68. Laboratory Records Department
69. ORNL Patent Office

EXTERNAL DISTRIBUTION

70. W. Blanck, Technical Director, AHAM, 20 North Wacker, Chicago IL 60606
71. John J. Cuttica, Chief, Technology and Consumer Products Branch, MS 2221C, Department of Energy, 20 Massachusetts Avenue NW, Washington DC 20545
72. A. J. Fowell, Chief, Product Engineering Division, National Bureau of Standards, Washington DC 20234
73. A. J. Fuchs, Group Leader, Procter and Gamble, Cincinnati OH 45217
74. J. Golterman, *Appliance Manufacturer*, Five South Wabash Avenue, Chicago IL 60603
75. R. M. Goodman, Director of Washer Engineering, Whirlpool Corporation, 4474 Tanglewood, St. Joseph MI 49085
76. C. P. Howard, Chief, Energy Utilization Section, National Bureau of Standards, Washington DC 20234
77. J. D. Hughes, Vice President Engineering, Franklin Manufacturing Company, Laundry Division, 600 Stockdale Street, Webster City IA 50595
78. J. G. Jacobsen, 363 Ruth Avenue, Mansfield OH 44907

79. T. Kapus, Buildings and Community Systems, MS 2221C, Department of Energy, 20 Massachusetts Avenue NW, Washington DC 20545
80. J. P. Millhone, Buildings and Community Systems, MS 2221C, Department of Energy, 20 Massachusetts Avenue NW, Washington DC 20545
81. T. Ohren, Procter and Gamble, Ivorydale Technical Center, Cincinnati OH 45217
82. F. J. Schlink, *Consumer's Research*, Consumer's Research Inc., Washington NJ 07882
83. J. A. Smith, Director, Office of Consumer Products, Department of Energy, 12th and Pennsylvania Avenue, Washington DC 20461
84. S. S. Waddle, DOE-ORO
85. Institute of Energy Analysis, ORAU-Library
86. Asst. Mgr., Energy Research & Development, DOE-ORO

87–113. Technical Information Center, Department of Energy, P. O. Box 62, Oak Ridge TN 37830

114–600. External Energy Conservation Distribution Mailing List and Conservation Technology Program Office (Bldg 9102-1, Rm 2)

☆U.S. GOVERNMENT PRINTING OFFICE: 1980-640-245/010