OAK RIDGE NATIONAL LABORATORY LIBRARIES

3 4456 0546385 1

ORNL/TM-6498

Steady-State Sodium Tests in a 19-Pin Internally Guard-Heated Simulated LMFBR Fuel Assembly with a Six-Channel Internal Blockage—Record of Experimental Data for THORS Bundle 3C

N. Hanus
W. R. Nelson
N. E. Clapp
M. H. Fontana
P. A. Gnadt
R. H. Thornton
J. L. Wantland

[redacted]

OAK RIDGE NATIONAL LABORATORY
CENTRAL RESEARCH LIBRARY
CIRCULATION SECTION
4500N ROOM 175
LIBRARY LOAN COPY
DO NOT TRANSFER TO ANOTHER PERSON
If you wish someone else to see this report, send in name with report and the library will arrange a loan.
UCN-7969 (3 9-77)

OAK RIDGE NATIONAL LABORATORY
OPERATED BY UNION CARBIDE CORPORATION · FOR THE DEPARTMENT OF ENERGY

Printed in the United States of America. Available from
the Department of Energy,
Technical Information Center
P.O. Box 62, Oak Ridge, Tennessee 37830
Price: Printed Copy $13.00; Microfiche $3.00

This report was prepared as an account of work sponsored by an agency of the United States Government. Neither the United States Government nor any agency thereof, nor any of their employees, contractors, subcontractors, or their employees, makes any warranty, express or implied, nor assumes any legal liability or responsibility for any third party's use or the results of such use of any information, apparatus, product or process disclosed in this report, nor represents that its use by such third party would not infringe privately owned rights.

ORNL/TM-6498
Dist. Category UC-79,
-79e, -79p

Contract No. W-7405-eng-26

Engineering Technology Division

STEADY-STATE SODIUM TESTS IN A 19-PIN INTERNALLY GUARD-HEATED SIMULATED LMFBR FUEL ASSEMBLY WITH A SIX-CHANNEL INTERNAL BLOCKAGE — RECORD OF EXPERIMENTAL DATA FOR THORS BUNDLE 3C

N. Hanus W. R. Nelson
(Report Coordinators)

N. E. Clapp P. A. Gnadt[†]
M. H. Fontana* R. H. Thornton
J. L. Wantland[‡]

*Head, Advanced Reactors Systems Section, ETD
[†]Manager, Construction and Operations, THORS Project
[‡]Manager, Planning and Analysis, THORS Project

Date Published: February 1979

NOTICE: This document contains information of a preliminary nature. It is subject to revision or correction and therefore does not represent a final report.

Prepared by the
OAK RIDGE NATIONAL LABORATORY
Oak Ridge, Tennessee 37830
operated by
UNION CARBIDE CORPORATION
for the
DEPARTMENT OF ENERGY

CONTENTS

	Page
ABSTRACT	1
1. INTRODUCTION	1
2. HISTORY OF PREVIOUS THORS BUNDLES	2
3. DESCRIPTION OF TEST FACILITY	4
3.1 THORS Facility	4
3.2 Fuel Pin Simulators	7
3.3 Main Control Power	7
3.4 Bundle 3C	9
4. INSTRUMENTATION	12
4.1 THORS Loop	12
4.2 Bundle 3C	12
5. TESTS CONDUCTED	19
6. DATA ACQUISITION AND PRESENTATION	24
6.1 Data Acquisition	24
6.2 Data Processing and Presentation	24
REFERENCES	25
APPENDIX A. BUNDLE 3C AND THORS LOOP SPECIFICATIONS	29
APPENDIX B. CORRECTIONS TO DATA	31
APPENDIX C. BUNDLE 3C INSTRUMENT LISTING	33
APPENDIX D. BUNDLE 3C STEADY-STATE TEST DATA	41

OAK RIDGE NATIONAL LABORATORY LIBRARIES

3 4456 0546385 1

STEADY-STATE SODIUM TESTS IN A 19-PIN INTERNALLY GUARD-HEATED SIMULATED LMFBR FUEL ASSEMBLY WITH A SIX-CHANNEL INTERNAL BLOCKAGE — RECORD OF EXPERIMENTAL DATA FOR THORS BUNDLE 3C

ABSTRACT

This report is a record of experimental data obtained during steady-state sodium operation with test bundle 3C in the Liquid-Metal Fast Breeder Reactor (LMFBR) Thermal-Hydraulic Out-of-Reactor Safety (THORS) Facility. Bundle 3C consisted of 19 heated pins [fuel pin simulators (FPSs)] surrounded by 12 heated edge pins installed in a stainless steel duct. The pins had outside diameters of 5.84 mm (0.230 in.) and were spaced by 1.42-mm-diam (0.056-in.) wire wraps on a 305-mm (12.0-in.) pitch, the same as for the proposed Clinch River Breeder Reactor (CRBR). A 6.4-mm (0.25-in.) stainless steel plate was attached to the central pin and blocked the six central channels 381 mm (15.0 in.) downstream from the start of the heated section. The uniformly heated length of the bundle was 533 mm (21.0 in.). Hollow pins 1.6 m (62 in.) long, which simulate the fission gas plenum of a reactor, were attached to the downstream end of the 19 central FPSs.

The purpose of the bundle 3C steady-state tests was to determine the thermal-hydraulic effects of the internal blockage at various flow-power ratios with a fixed number of pins heated. This report includes a description of the test facility and instrumentation, data reduction procedures, and the test data from experiments completed in this series.

Keywords: sodium, LMFBR, safety, THORS, fuel pins, blockage, thermal-hydraulic experiment, electrical heaters, data collection, ex-reactor experiments.

1. INTRODUCTION

This report presents experimental data obtained during steady-state testing of a 19-pin internally guard-heated bundle, which simulated a portion of a fuel subassembly in the Liquid-Metal Fast Breeder Reactor (LMFBR).*

---

*Now part of the Breeder Reactor Program.

This test bundle is an extension of a previous blocked bundle (bundles 3A[1] and 3B[2,3]), whose 19 central pins were identical to the present bundle but whose 12 edge pins were unheated and imbedded in the duct wall to form a scalloped duct. Two-phase tests conducted with bundle 3C to investigate boiling propagation from the blockage wake will be discussed in a future report.

The main objective of these bundle tests was to establish and measure steady-state temperature distributions at various flow-power combinations, to determine the effect of heated edge pins on the temperature profile, and to provide experimental data to verify computer codes used for predicting the temperature profiles in a partially blocked LMFBR fuel subassembly.

2. HISTORY OF PREVIOUS THORS* BUNDLES

Construction of the original THORS Facility [formerly called the Fuel Failure Mockup (FFM)] was completed in December 1970, and the facility has since been extensively modified. Prior to this test series, six 19-pin bundles of different designs were tested in the facility. Table 1 shows the operating history of these bundles. Bundles 1A and 1B were unblocked bundles in a scalloped duct.[4] Bundle 2, which was enclosed in a hexagonal duct, was originally designed to obtain thermal-hydraulic data; in this configuration, it was referred to as bundle 2A.[5] After completion of the test program in this configuration, the bundle was still viable and was inverted in the test section and operated with blockage plates of various sizes installed at the bundle inlet. In this latter configuration, it was referred to as bundle 2B.[6] Bundle 3A,[1] which was surrounded by a scalloped duct with dummy wire-wrap segments on the dummy edge rods and which contained a six-channel central blockage, was used to obtain single-phase thermal-hydraulic data. Bundle 3B[2,3] was identical to bundle 3A; however, the test program for bundle 3B included quasi-steady-state sodium boiling with and without inert gas

---

*Thermal-hydraulic out-of-reactor safety.

Table 1. THORS operating experience

Bundle identification	Isothermal operation (hr)	Operation with power (hr)
1A	1300	200
2	3010	470
1B	894	350
3A	3039	151
5A[a]	1032	170
5B[a]	269	46
5B[b]	410	48
5C[c]	1541	127
5D[c,d]	2827	97
3B[d,e]	537	51
6A[f]	7864	380
3C[g]	3495	170

[a]Blockage plate adjusted against duct wall.

[b]Blockage plate adjusted 0.35 mm (0.014 in.) away from duct wall.

[c]Blockage plate removed.

[d]Boiling tests (with and without gas injection).

[e]Boiling tests included ∿65 sec of boiling with the full bundle and ∿585 sec of boiling with heater 7 inoperative (the heater 7 electrical circuit opened during the first boiling test with gas injection). During 430 sec of this 585-sec period, there was continuous boiling (without gas injection).

[f]Thirty-eight tests were run in which boiling occurred. Five of these runs were to dryout (unstable) conditions. Total boiling time for the bundle was ∿11.5 min.

[g]Steady-state runs only.

injection. Bundle 5, which was enclosed in a hexagonal duct with half-size [0.71-mm (0.028-in.)] wire spacers between the heaters and the duct wall, was designed for operation in four configurations: 5A, 5B, 5C, and 5D. Bundles 5A[7] and 5B[8] contained a 3-mm-thick (1/8-in.) stainless steel blockage plate installed along one of the hexagonal sides. This blockage plate blocked one-third of the flow area. Tests for bundles 5C[8] and 5D[9] were run with the blockage plate removed. Bundle 5D was the first THORS bundle taken to temperatures high enough to produce sodium boiling; these tests were run in October 1974. Boiling tests with and without argon gas injection were run and were followed by the boiling tests of bundle 3B. Bundle 6A[10] was the first full-length bundle tested in the THORS Facility. Tests for bundle 6A included steady-state tests with various flow-power combinations, transient free-convection tests, and quasi-steady-state sodium boiling tests.

3. DESCRIPTION OF TEST FACILITY

3.1 THORS Facility

The THORS Facility is a high-temperature sodium facility in which test bundles, made to duplicate segments of reactor core subassemblies, are subjected to thermal-hydraulic testing under normal and abnormal operating conditions. The loop piping is designed for continuous operation at 700 kPa (100 psig) and 650°C (1200°F). The fuel pins are simulated by electrically heated fuel pin simulator (FPS) units. A 0.5-MW heat dump is used for heat removal during the bundle 3C tests, and a 2-MW heat dump will be connected to the loop piping after bundle 3C testing is completed. The facility bundle power supply has already been upgraded to 2.0-MW capability.

Figure 1 is a flow diagram of the facility, and Fig. 2 is an isometric drawing of the facility. Sodium flow is provided by a dc-motor-driven vertical-shaft centrifugal pump capable of delivering 40 ℓ/s (600 gpm) at a pressure difference of 960 kPa (140 psi). The variable-speed pump and throttle valves are used to vary the sodium flow through

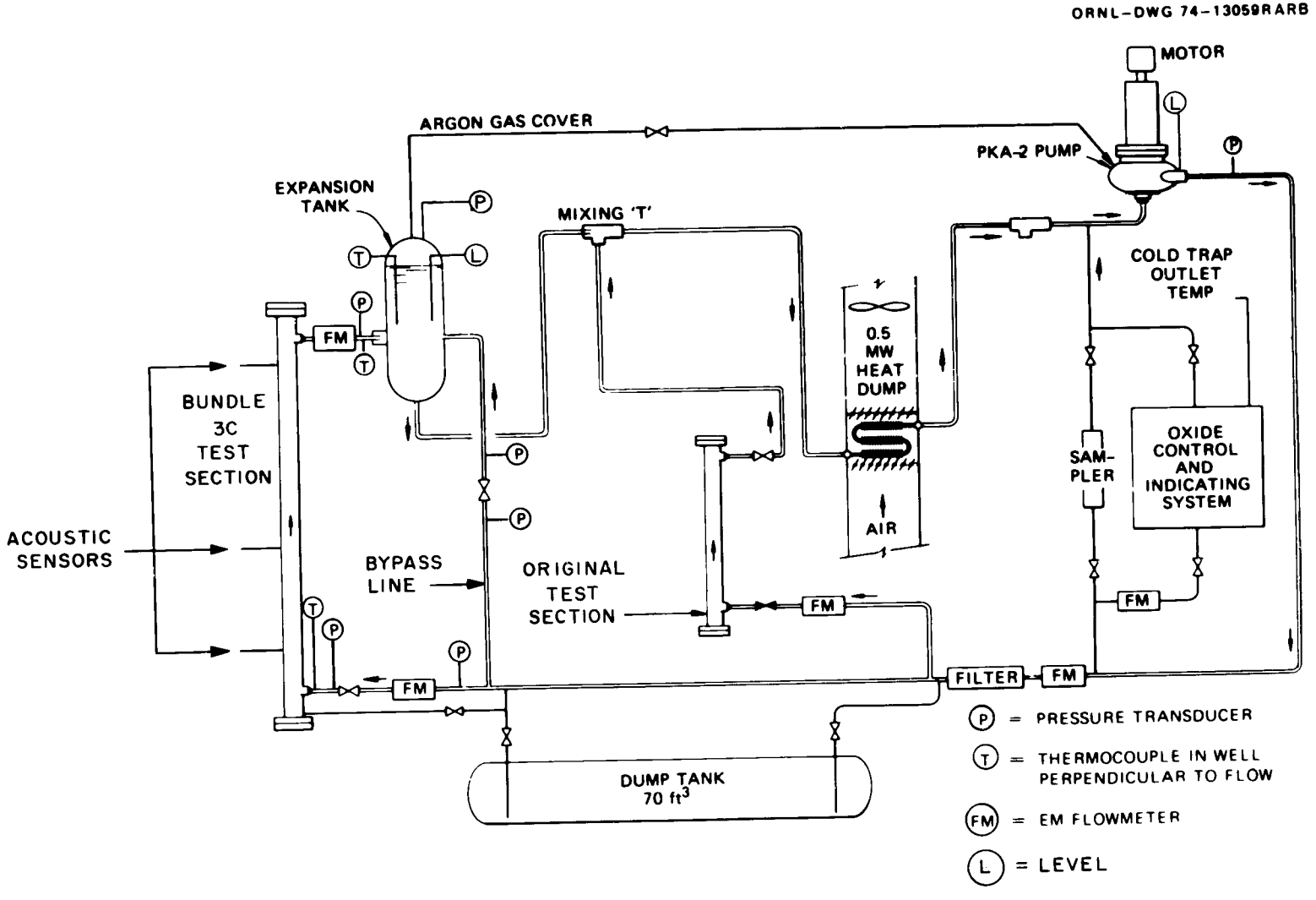

Fig. 1. Flow diagram of the THORS Facility for bundle 3C operation.

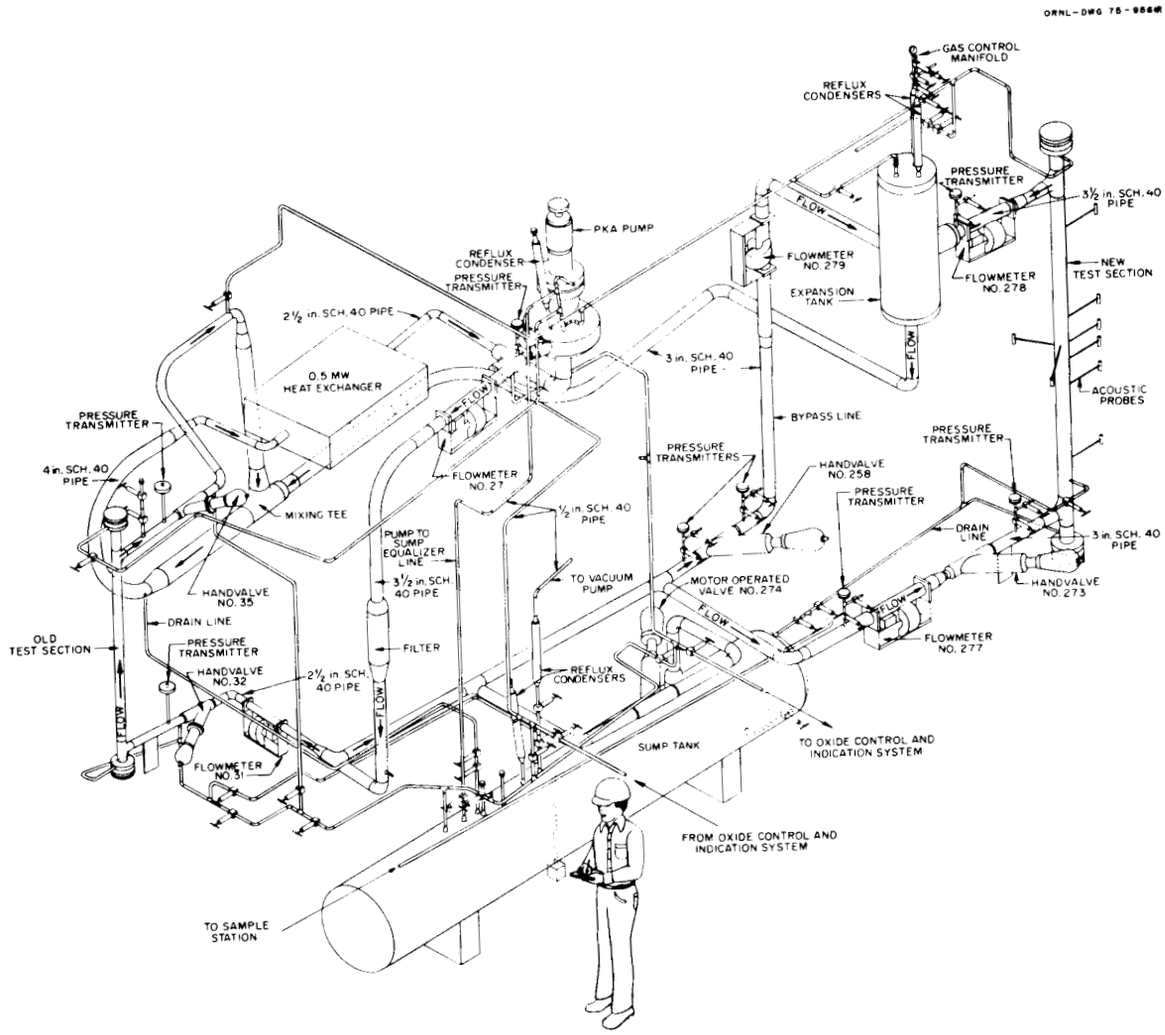

Fig. 2. Isometric drawing of the THORS Facility for bundle 3C operation (1 in. = 25.4 mm).

the test section, and a bypass line to the test section is used to simulate adjacent subassemblies in the remainder of the core. An expansion tank located downstream of the test section simulates the upper plenum and the argon cover gas over the reactor core and serves to mix hot and cold sodium, thus protecting the remainder of the facility from excessive temperatures.

An oxide control and indicating (OCI) system containing a cold trap and plugging indicator is installed to reduce the oxide concentration in the sodium to less than 10 ppm. A tank is provided for sodium storage

when the system is not in operation or when major maintenance is to be performed. Pressure transducers, flowmeters, and thermocouples are installed to measure the system operating parameters, and electric trace heaters are installed on all the system lines to preheat the system above the melting point of sodium. Design details for the individual components are available in Ref. 11. The piping system is designed according to the ANSI Code for Pressure Piping B31.1 (1977). The materials for the initial construction of the THORS Facility were purchased according to RDT Standards, and materials for subsequent modification were purchased according to ASTM Standards and upgraded to the requirements of the ASME Code for Boiler and Pressure Vessels.

Sodium has been circulated in the THORS Facility at temperatures as high as 704°C (1300°F), while sodium temperatures in the test section have been as high as 1000°C (1840°F). Power levels for the individual fuel pins have reached 36.0 kW/m (11.8 kW/ft).

3.2 Fuel Pin Simulators

The heaters used to simulate the individual fuel pins were manufactured by the Watlow Electric Manufacturing Company, St. Louis, Missouri. Figure 3 shows the important characteristics of the heaters used in bundle 3C. Voltage is applied to the heating element through the copper lead at the open end of the heater; the electric circuit is completed at the opposite end where the element is grounded through the end plug to the sodium. Heat is generated over 0.525 m (1.75 ft) in a uniform distribution; a bundle 3C FPS is rated at 8.5 kW/ft (14.9 kW total). The core inside the winding and the insulation between the winding and the type 316 stainless steel sheath are of compacted boron nitride (BN).

3.3 Main Control Power

The power to the FPSs is supplied by a three-phase grounded-wye ac electrical system. The FPSs are connected to each of the three electrical phases in an attempt to balance the load so that only the

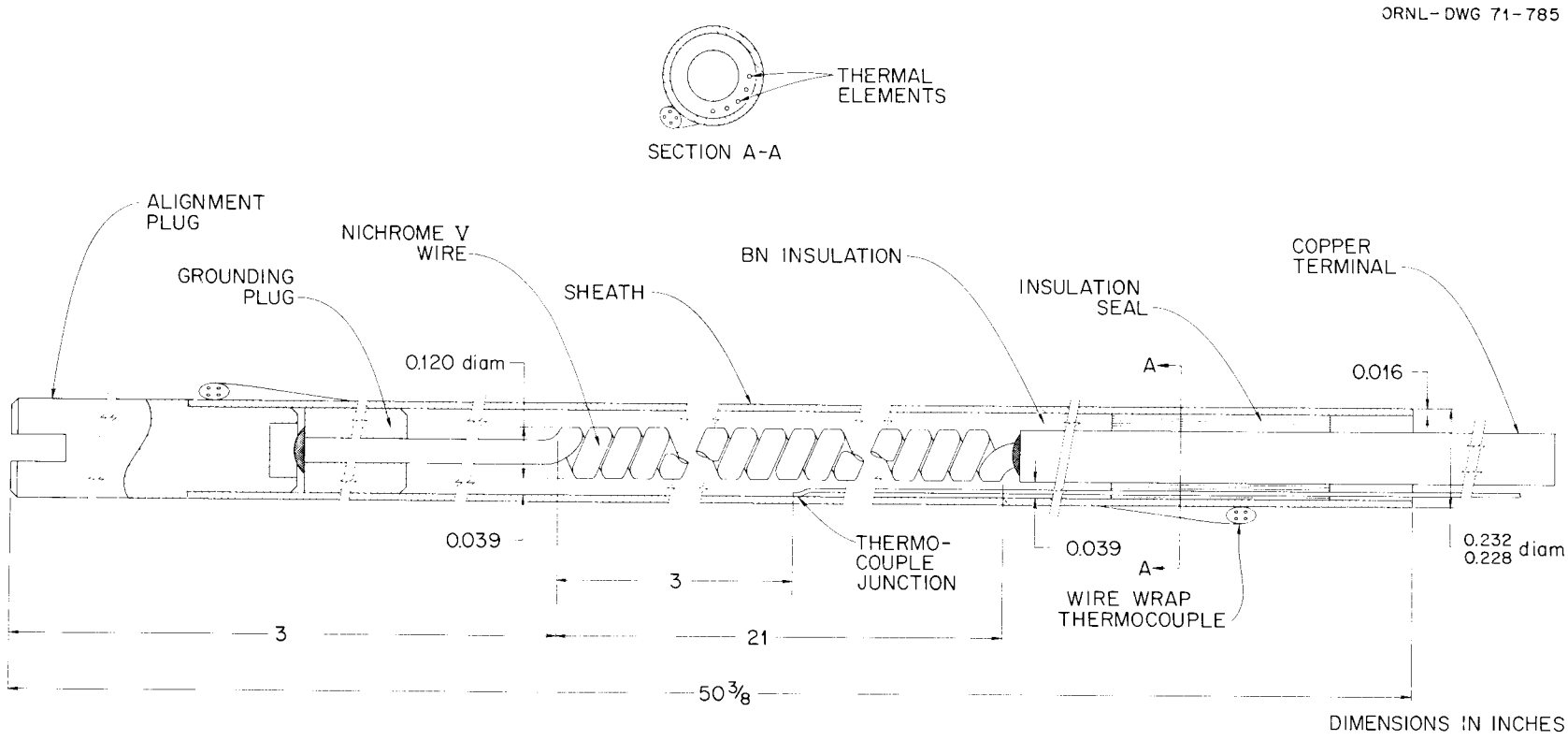

Fig. 3. Fuel pin simulator for THORS bundle 3C (1 in. = 25.4 mm).

unbalanced current in the three-phase circuit returns through the neutral lead. Power is regulated by six controllers that activate zero-voltage-firing silicon-controlled rectifiers (SCRs) in series with the FPSs. Each controller normally feeds three or four FPSs, and the twelve separate control circuits can also be connected so that all FPSs may be operated from a common controller. This control arrangement makes it possible to run tests with power skews of various types across the bundle; over-power may be applied to one or more pins with simple wiring changes. Experiments with a single FPS operating may be performed by disconnecting appropriate FPSs from the relevant circuit.

Voltage to the FPSs may be varied by using adjustable transformer taps on the supply transformers. The electrical system is designed so that power up to 51 kW/pin for each of 37 circuits is possible, provided a limit of 200 A for each individual circuit is not exceeded. Each FPS in the bundle is protected against massive failure of the FPSs by a fast-acting electronic circuit that diverts current from the failing FPS.[12]

3.4 Bundle 3C

Bundle 3C is composed of 31 electrically heated 5.84-mm-diam (0.230-in.) FPSs surrounded by a scalloped duct wall. The FPSs are separated by 1.42-mm-diam (0.056-in.) helically wrapped wire spacers on a 305-mm (12.0-in.) pitch. The wire wrap for each FPS contains two thermocouples that are placed along the axial length of the FPS to obtain temperature readings at two desired locations.

The heated section of bundle 3C is 533 mm (21 in.) long with a uniform axial power distribution. The unheated simulated fission gas plenum (SFGP), which is located downstream of the heated section, is 1.6 m (62 in.) long. Figure 4 is an assembly view of the test section.

Figure 5 is a photograph of the six-channel blockage plate for bundle 3C. The 6.4-mm-long (0.25-in.) blockage plate is brazed to the central rod in the heated zone 391 mm (15.0 in.) from the start of the heated section and is designed to block the six flow channels (8.1% of total flow area) surrounding the central rod.

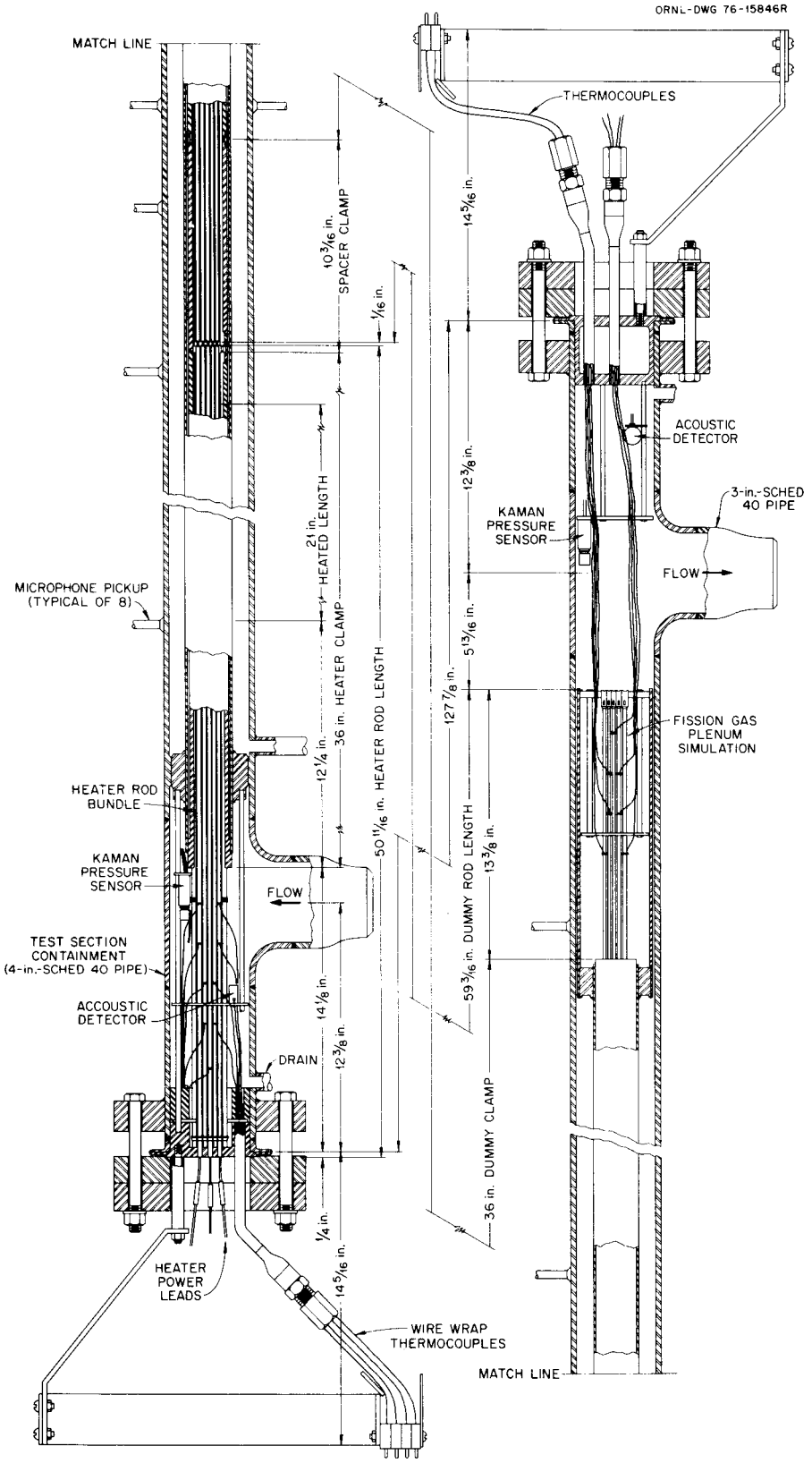

Fig. 4. THORS test section for bundle 3C assembly (1 in. = 25.4 mm).

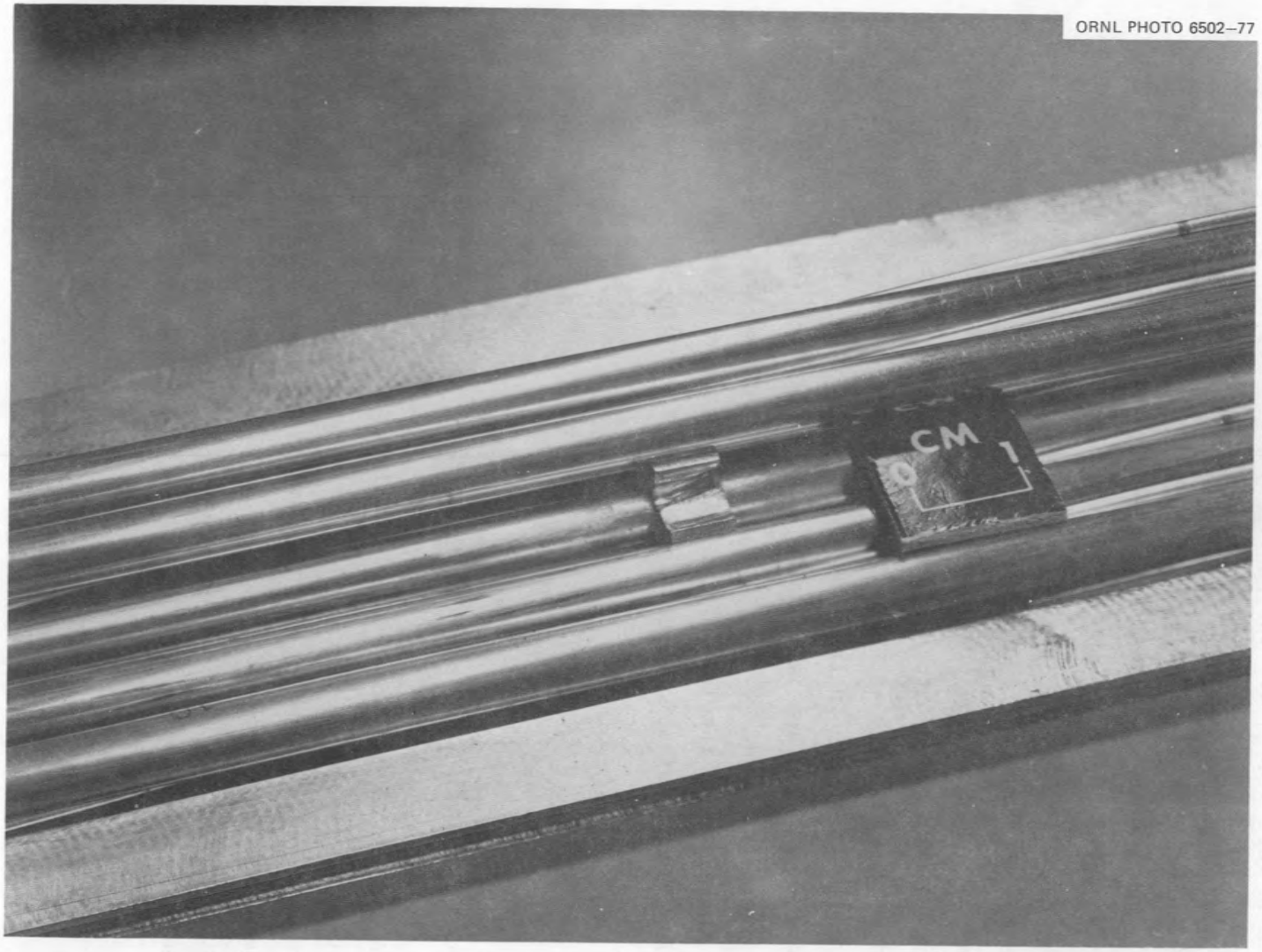

Fig. 5. THORS bundle 3C heater pin assembly showing six-channel blockage plate.

Figure 6 is a photograph of the end of the heated section. The photograph was taken before the dummy rod (fission gas plenum simulator) extensions were attached. The photograph shows how the duct was machined to allow installation of the 1.42-mm-diam (0.056-in.) wire wraps around the 12 edge row FPSs. This flow area allows sodium to cool the outer row of FPSs. Figure 7 shows the fission gas simulators, which were attached to the FPSs. In the fission gas plenum region, the wire wraps were attached to the fission gas simulators only on the inside portion of the duct. (This configuration was identical to the design used for bundles 3A and 3B in the heated zone region.) The flow area in this section is thus reduced to 68% of that in the heated zone section (see Appendix A). Figure 8 is a photograph of the assembled test section prior to installation in the test section housing. The leads connected to the support ring are from bundle instrumentation that has been separated and identified. Figure 9 is a photograph of the bundle after being installed in the THORS Facility. Instrument connections to the facility Data Acquisition System are made at the top and bottom of the bundle.

4. INSTRUMENTATION

4.1 THORS Loop

A simplified flow diagram of the THORS Facility showing the instrumentation is presented in Fig. 1. A similar flow diagram (Fig. 10) shows the relative elevations of the pressure transducers in the facility. All pressure data recorded and presented in Appendix D include the static pressure head of sodium. Table 2 presents the type, range, and accuracy of the loop instrumentation.

4.2 Bundle 3C

Both the heated length and the simulated fission gas plenum are instrumented with wire-wrap thermocouples, duct wall thermocouples, and heater internal thermocouples. Table 3 gives the quantities of

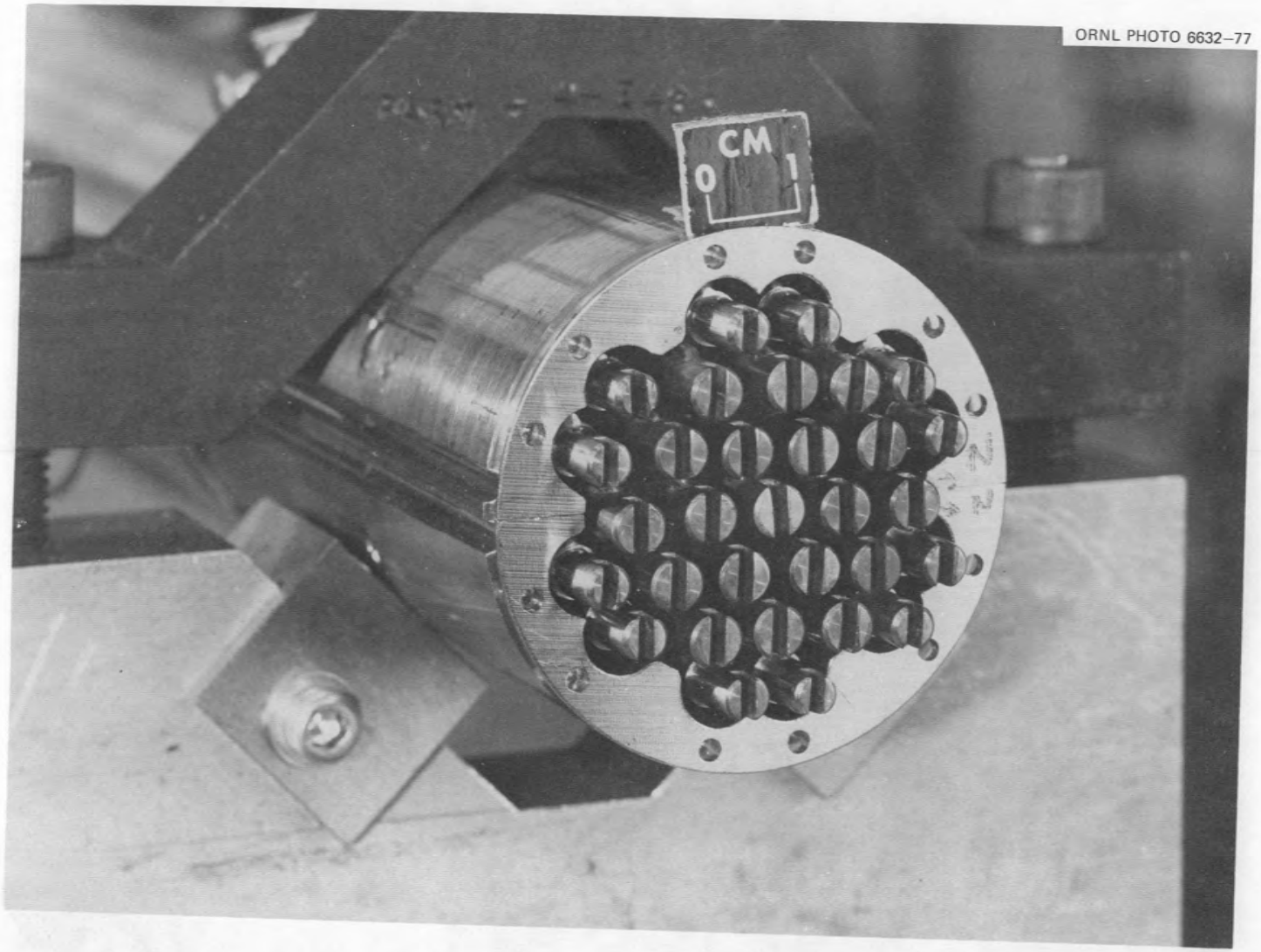

Fig. 6. THORS bundle 3C heater pin assembly at end of heated section.

Fig. 7. THORS bundle 3C assembly showing dummy rod extensions to heater pins.

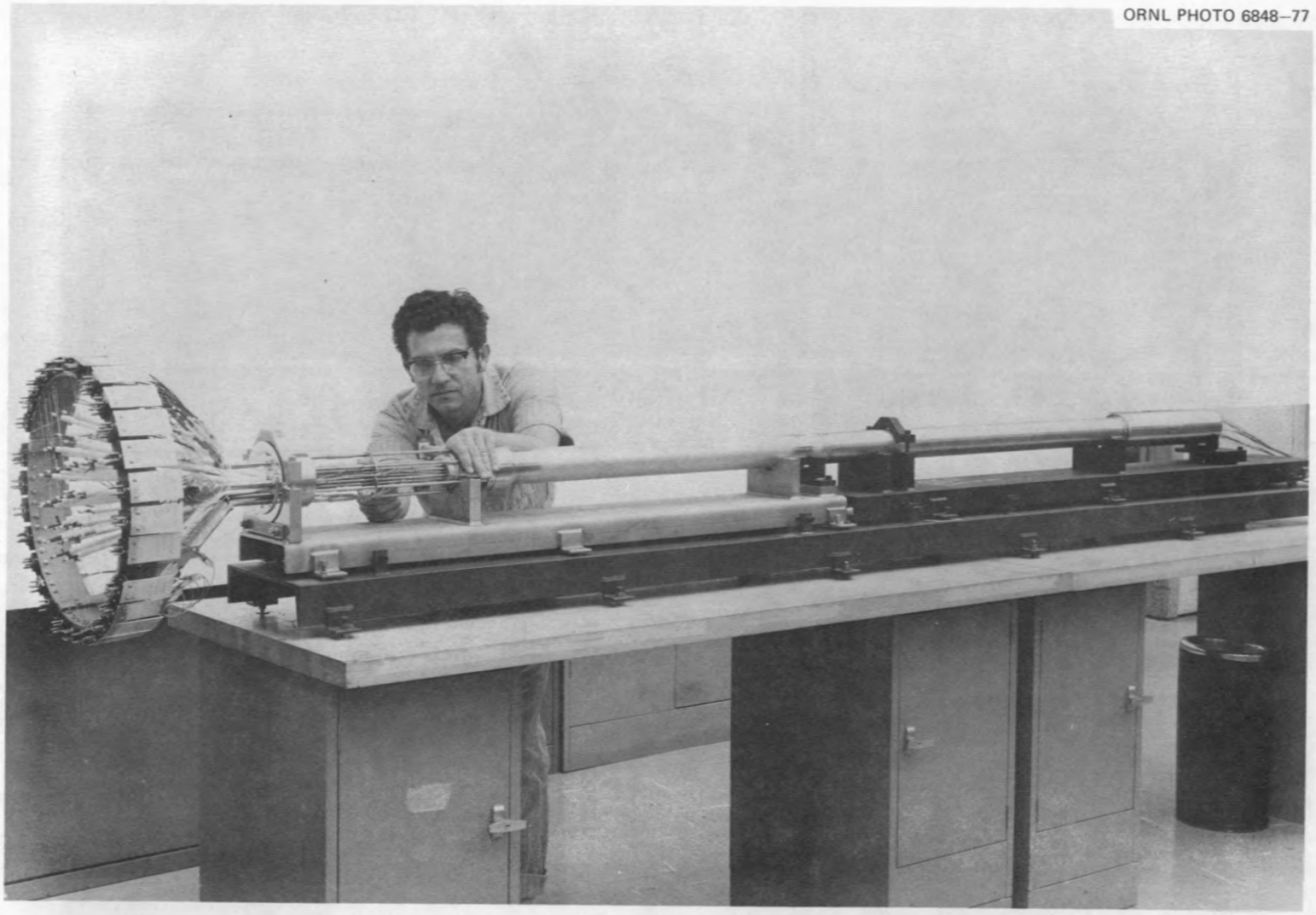

Fig. 8. THORS bundle 3C assembly showing assembled bundle prior to installation in test section housing.

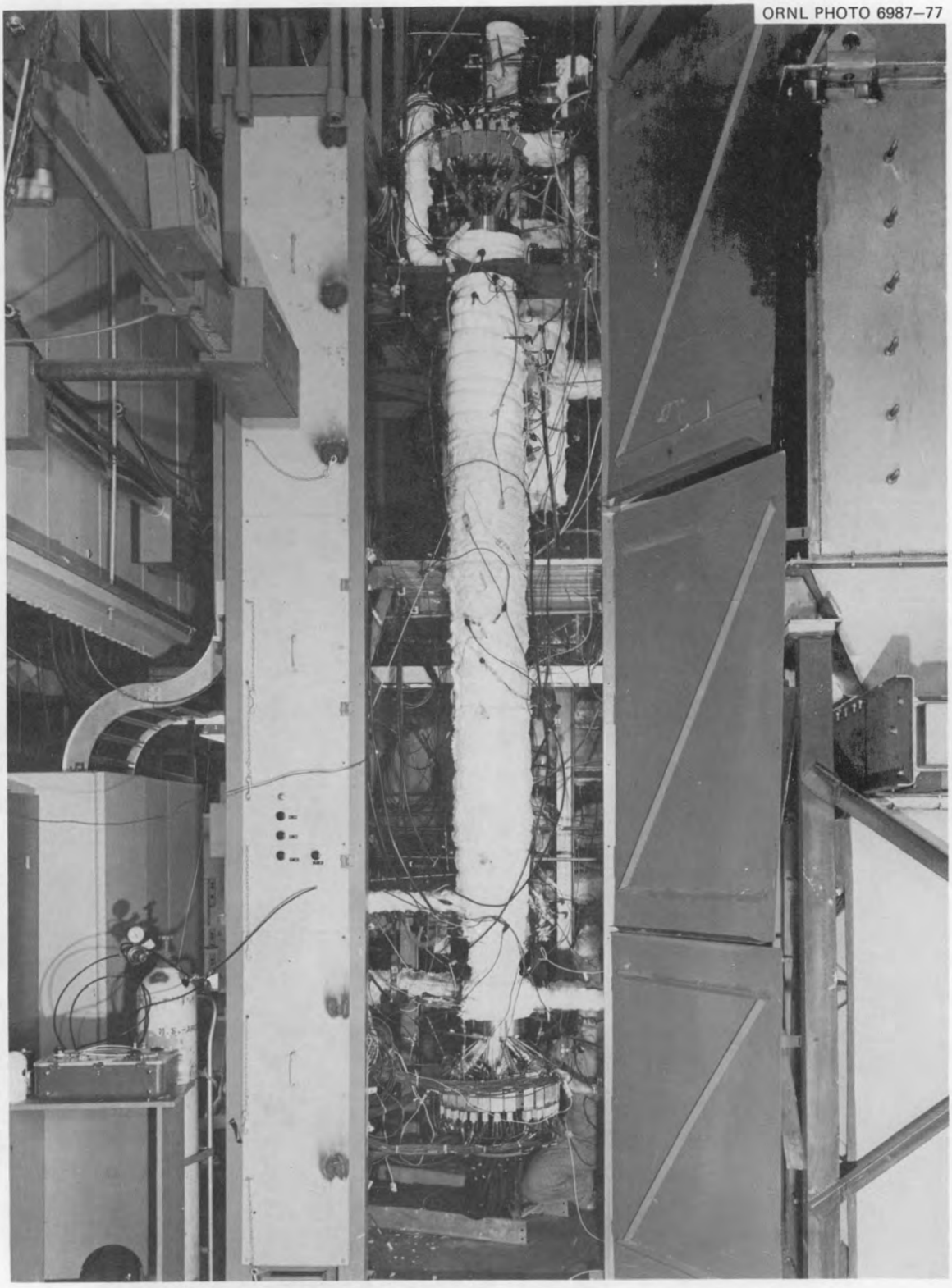

Fig. 9. THORS bundle 3C after installation in facility.

Table 2. THORS loop instrumentation (bundle 3C)

Measurement	Type	Range	Accuracy
Pressure[a]	Diaphragm NaK pressure sensor[13]	0–1.0 MPa (0–150 psi) 0–0.7 MPa (0–100 psi)	±0.010 MPa (±1.5 psi) ±0.007 MPa (±1.0 psi)
Temperature	Chromel-Alumel thermocouple	−17.8–1093.3°C (0–2000°F)	±1%[b]
Flow	Electromagnetic flowmeter[14]	3–100 ℓ/s (50–1600 gpm) 0–3 ℓ/s (0–50 gpm)	±1%[b] ±0.03 ℓ/s (±0.5 gpm)
Power	Thermal converters[15,16]		±1%[b]

[a]All pressures are measured in pounds per square inch, gage, where P_{atm} = 14.3 psia. In addition, all pressures include the static pressure head of sodium.

[b]Percent of absolute reading.

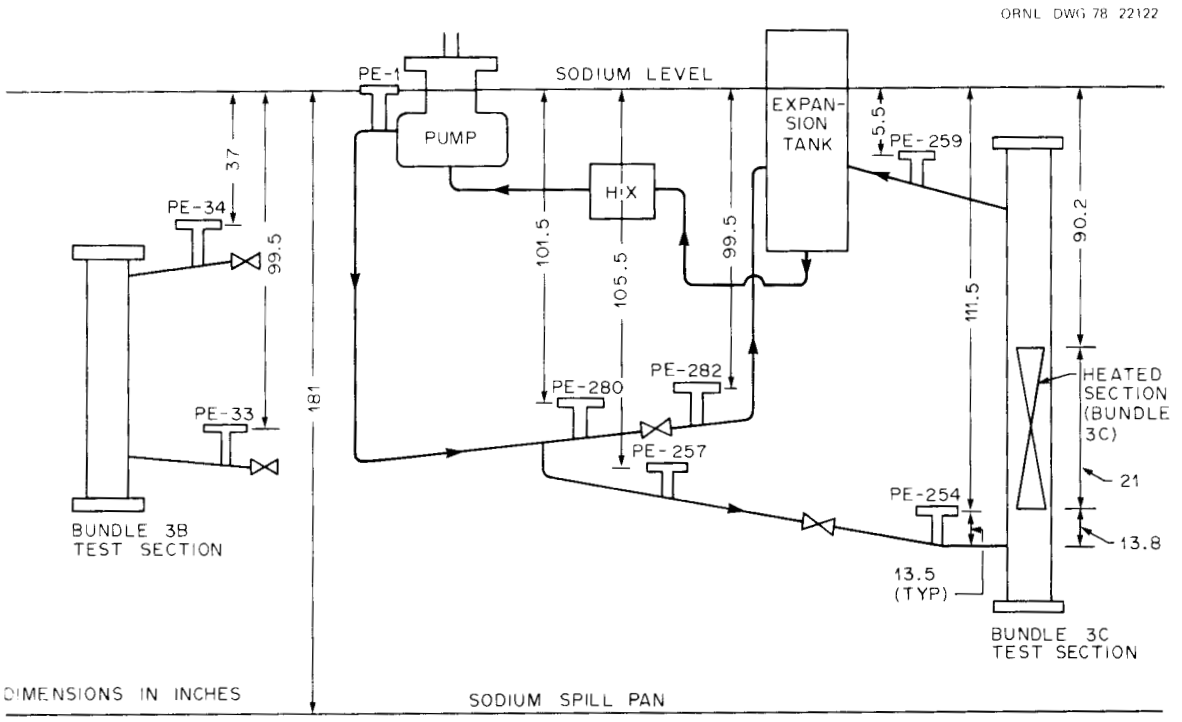

Fig. 10. THORS relative pressure transducer elevations (December 1977) (1 in. = 25.4 mm).

Table 3. Bundle 3C temperature-measuring instrumentation

Type	Location	Quantity
Thermocouple (Chromel-Alumel)	Inside diameter of heater sheath	90
	Wire wrap on FPSs	62
	Duct wall of heated section	5
	Wire wrap on SFGP[a] pins	26
	Total	183

[a]Simulated fission gas plenum.

different types of thermocouples. Thermocouple instrumentation layouts for bundle 3C are shown in Figs. 11 and 12.

5. TESTS CONDUCTED

The steady-state single-phase tests that were conducted are listed in Tables 4 to 7. The data from these tests are used (1) to determine test section pressure drop at various flows, (2) to verify thermocouple locations, (3) to determine bundle internal flow patterns, (4) to verify thermal-hydraulic computer programs, (5) to determine the effect of the power to the 12 edge pins on the radial temperature profile, and (6) to examine the sodium temperature in the wake of a six-channel blockage with and without a "flat" radial temperature profile across the bundle.

The test procedure for each test was identical. The test section bypass valve was fully closed for all steady-state tests. Test section inlet flow, heater power, inlet temperature, and outlet temperature were established in accordance with the test plan and checked every 2 min.

Table 4. Test 2 (pressure drop), test series 10 (bundle 3C)

Purpose: Determine test section pressure drop vs flow

Run No.	Inlet flow [ℓ/s (gpm)]	Test section inlet temperature [°C (°F)]	Heater power (kW/pin)	Date
100A	0.46 (7.3)	443 (830)	0	11-17-77
100B	0.50 (7.9)	443 (830)	0	11-17-77
100C	0.646 (10.2)	443 (830)	0	11-17-77
101	0.963 (15.2)	443 (830)	0	11-17-77
102	1.37 (21.7)	443 (830)	0	11-17-77
103	1.83 (29.1)	443 (830)	0	11-17-77
104	2.29 (36.3)	443 (830)	0	11-17-77
105	2.75 (43.6)	443 (830)	0	11-17-77
106	3.21 (50.9)	443 (830)	0	11-17-77
107	3.64 (57.8)	443 (830)	0	11-17-77
108	4.09 (64.9)	443 (830)	0	11-17-77
109	4.51 (71.6)	443 (830)	0	11-17-77

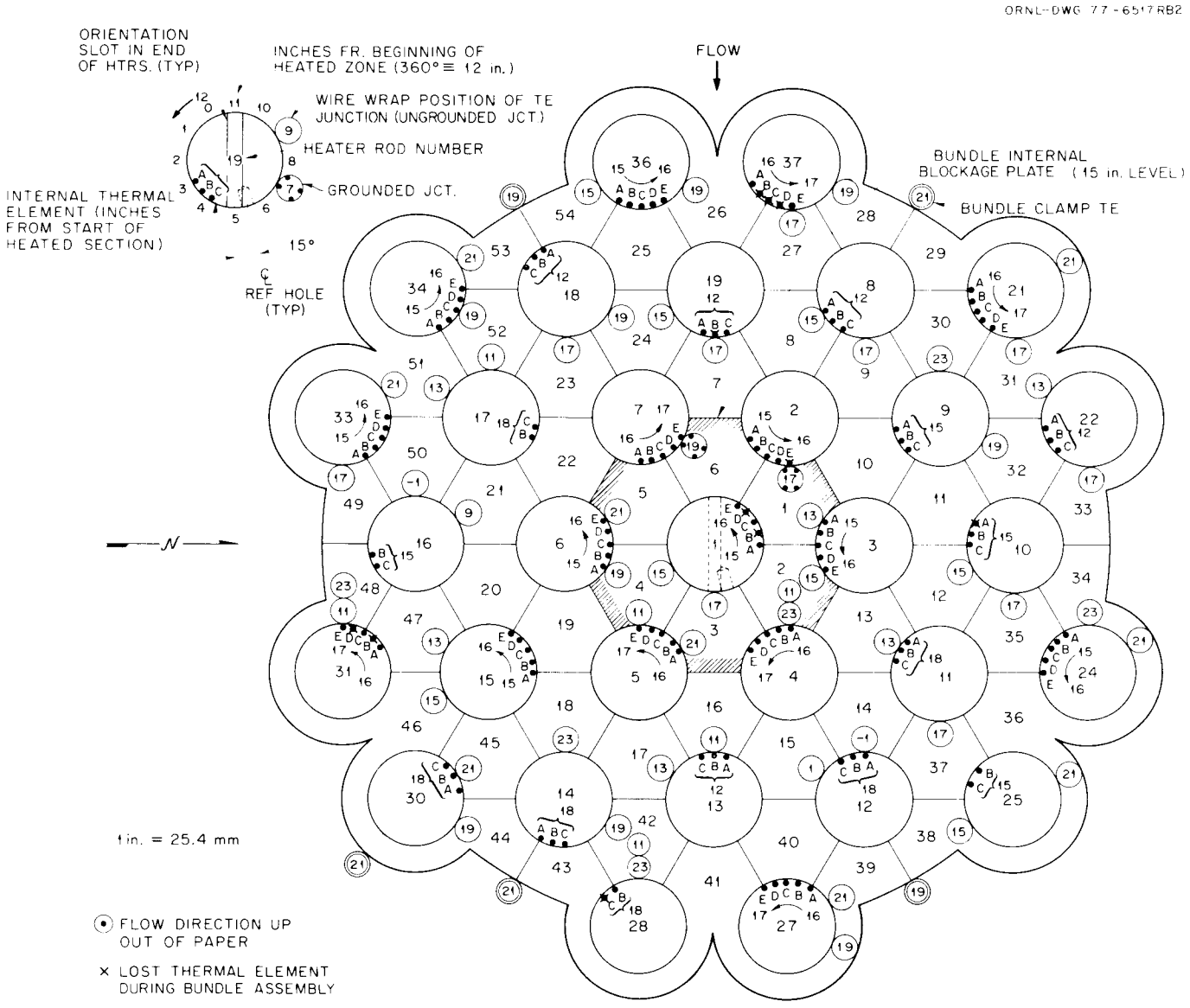

Fig. 11. THORS bundle 3C heater pin bundle instrumentation.

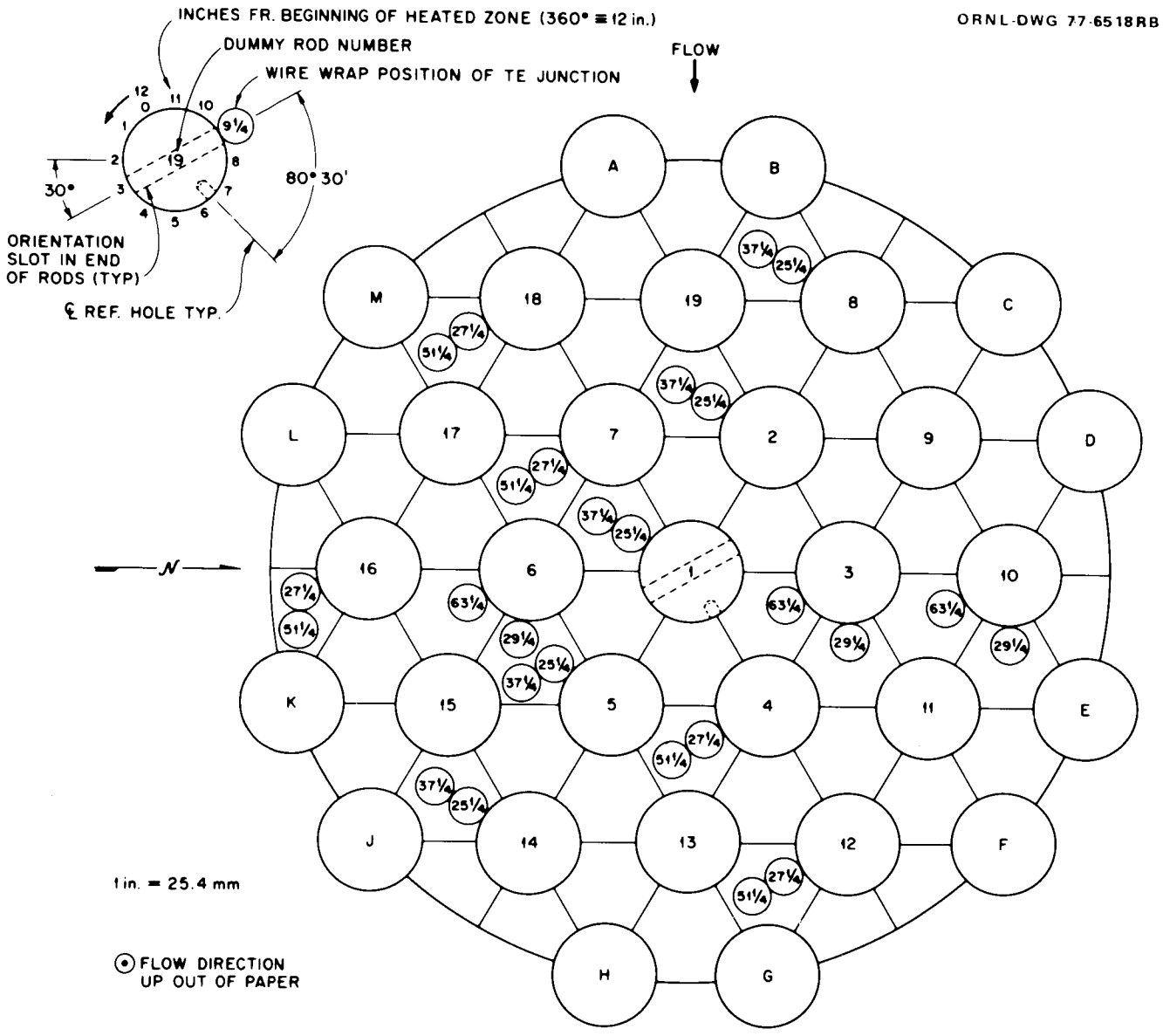

Fig. 12. THORS bundle 3C dummy rod bundle instrumentation.

Table 5. Test 10 (single pin heated), test series 10

Inlet temperature: 443°C (830°F)
Purpose: Determine internal flow patterns by heating each pin; verify bundle thermocouple locations

Run No.	Test section flow [ℓ/s (gpm)]	Pin power [kW/m (kW/ft)]	Pin heated	Date
101	0.912 (14.4)	28.2 (8.57)	1	1-17-78
102	0.906 (14.3)	27.9 (8.51)	2	1-17-78
103	0.906 (14.3)	27.9 (8.51)	3	1-17-78
104	0.906 (14.3)	27.2 (8.28)	4	1-17-78
105	0.912 (14.4)	26.9 (8.23)	5	1-17-78
106	0.906 (14.3)	26.9 (8.23)	6	1-17-78
107	0.912 (14.4)	27.2 (8.28)	7	1-17-78
108	0.912 (14.4)	26.9 (8.23)	8	1-17-78
109	0.893 (14.1)	27.2 (8.28)	9	1-16-78
110	0.893 (14.1)	26.9 (8.23)	10	1-16-78
111	0.893 (14.1)	27.2 (8.28)	11	1-16-78
112	0.893 (14.1)	27.2 (8.28)	12	1-16-78
113	0.899 (14.2)	26.9 (8.23)	13	1-16-78
114	0.899 (14.2)	27.5 (8.40)	14	1-16-78
115	0.906 (14.3)	28.2 (8.57)	15	1-17-78
116	0.918 (14.5)	26.9 (8.23)	16	1-17-78
117	0.912 (14.4)	26.9 (8.23)	17	1-17-78
118	0.918 (14.5)	26.8 (8.17)	18	1-17-78
119	0.912 (14.4)	26.2 (8.00)	19	1-17-78
121	0.61 (9.7)	9.6 (2.9)	21	1-9-78
122	0.63 (9.9)	9.6 (2.9)	22	1-17-78
124	0.62 (9.8)	9.6 (2.9)	24	1-18-78
125	0.62 (9.8)	9.7 (3.0)	25	1-13-78
127	0.61 (9.7)	9.6 (2.9)	27	1-18-78
128	0.62 (9.8)	9.6 (2.9)	28	1-18-78
130	0.63 (9.9)	9.5 (2.9)	30	1-13-78
131	0.62 (9.8)	9.6 (2.9)	31	1-13-78
133	0.62 (9.8)	9.6 (2.9)	33	1-18-78
134	0.63 (9.9)	9.6 (2.9)	34	1-13-78
136	0.61 (9.7)	9.5 (2.9)	36	1-18-78
137	0.61 (9.7)	9.2 (2.8)	37	1-18-78

Table 6. Test 11 (edge pins heated), test series 10 (bundle 3C)

Purpose: Determine the effect of heated edge pins in flattening the radial temperature profile

Run No.	Test section flow [ℓ/s (gpm)]	Pin power 19 central [kW/m (kW/ft)]	Pin power 12 edge [kW/m (kW/ft)]	Total (kW)	Test section inlet temperature [°C (°F)]	Date
101	0.906 (14.3)	16.6 (5.07)	0 (0)	168	442 (827)	3-10-78
106	0.918 (14.5)	16.6 (5.07)	15.5 (4.73)	268	424 (795)	3-9-78
111	4.49 (70.9)	16.6 (5.07)	0 (0)	168	443 (829)	3-2-78
115	4.52 (71.3)	16.5 (5.05)	14.9 (4.56)	263	441 (825)	3-2-78
116	4.53 (71.6)	16.4 (5.02)	16.4 (5.01)	273	443 (831)	3-2-78
117	4.60 (72.7)	16.6 (5.06)	18.0 (5.50)	284	444 (832)	3-2-78
121	4.52 (71.4)	27.9 (8.51)	0 (0)	283	447 (837)	3-3-78
125	4.64 (73.3)	27.7 (8.46)	25.1 (7.66)	442	585 (1085)	3-8-78
126	4.60 (72.7)	27.7 (8.46)	27.5 (8.40)	458	598 (1109)	3-8-78
131	2.77 (43.8)	28.1 (8.57)	0 (0)	285	443 (831)	3-8-78
136	2.84 (44.8)	27.9 (8.51)	24.7 (7.54)	442	555 (1031)	3-8-78
141	0.893 (14.1)	14.2 (4.33)	0 (0)	143	445 (833)	3-9-78
142	0.912 (14.4)	14.0 (4.27)	12.7 (3.87)	223	444 (832)	3-9-78
143	0.956 (15.1)	14.1 (4.31)	14.1 (4.28)	233	445 (833)	3-9-78
144	0.918 (14.5)	14.1 (4.31)	15.4 (4.70)	242	445 (834)	3-9-78
151	4.53 (71.5)	24.6 (7.50)	0 (0)	249	444 (832)	3-3-78
152	4.52 (71.3)	24.2 (7.37)	21.9 (6.69)	386	529 (985)	3-8-78
153	4.55 (71.9)	24.6 (7.50)	24.2 (7.37)	404	552 (1025)	3-8-78
154	4.61 (72.8)	24.7 (7.54)	27.4 (8.34)	426	569 (1056)	3-7-78
161	2.78 (43.9)	24.7 (7.54)	0 (0)	250	442 (828)	3-3-78
162	2.73 (43.1)	24.2 (7.37)	21.9 (6.69)	386	506 (943)	3-7-78
163	2.74 (43.3)	24.2 (7.37)	24.0 (7.31)	399	517 (962)	3-7-78
164	2.77 (43.7)	24.6 (7.50)	27.3 (8.34)	424	539 (1002)	3-7-78

Table 7. Test 12 (edge pins heated), test series 10 (bundle 3C)

Purpose: Provide maximum sodium temperatures in the blockage wake for thermal-hydraulic correlation

Run No.	Test section flow [ℓ/s (gpm)]	Pin power 19 central [kW/m (kW/ft)]	Pin power 12 edge [kW/m (kW/ft)]	Total (kW)	Test section inlet temperature [°C (°F)]	Date
101	0.918 (14.5)	9.8 (3.0)	9.8 (3.0)	164	443 (829)	3-13-78
102	1.29 (20.3)	14.1 (4.29)	14.0 (4.28)	233	442 (828)	3-13-78
103	1.70 (26.8)	20.2 (6.17)	20.0 (6.11)	334	473 (884)	3-13-78
104	2.71 (42.7)	16.5 (5.04)	16.4 (5.00)	273	446 (835)	3-14-78
105	3.67 (58.0)	16.6 (5.05)	16.4 (5.01)	273	445 (833)	3-14-78
107	3.77 (59.5)	24.6 (7.50)	24.4 (7.43)	405	537 (999)	3-15-78
109	3.77 (59.6)	28.1 (8.57)	27.9 (8.51)	464	595 (1103)	3-15-78
203	1.67 (26.4)	20.2 (6.17)	20.0 (6.11)	334	477 (890)	3-16-78
207	3.74 (59.1)	24.4 (7.43)	24.2 (7.37)	402	534 (994)	3-16-78

When steady-state conditions [less than a 0.06-ℓ/s (1-gpm) flow change and less than a −15°C (5°F) inlet and outlet change over a 5-min period] were established, a 20-sec data scan (10,000 data points/sec) was recorded on magnetic tape. These data were then reduced as described in the following section and are presented in Appendix D.

6. DATA ACQUISITION AND PRESENTATION

6.1 Data Acquisition

Data were recorded using a fast-response data acquisition system (DAS) controlled by a PDP-8E computer. The system scanned a maximum of 256 channels at the rate of 10,000 points/sec and stored the data on magnetic tape.

While the data were being recorded on tape, ∿100 selected signals were displayed on an oscilloscope for real-time monitoring. A data printout of selected instrument responses could be obtained minutes after the test at the facility operating panel.

6.2 Data Processing and Presentation

The data from the PDP computer-generated magnetic tapes were transferred to IBM 360 compatible tapes. The data on these tapes were then converted to engineering units and formatted as shown in Appendix D. The data presented in Appendix D (for a particular instrument in a particular steady-state run) is an average of all the data recorded during a 20-sec period. A minimum of 200 data points/sec were recorded from each instrument. Standard deviations for this 20-sec average of each instrument response is also included in Appendix D. Another column in Appendix D lists the normalized temperatures in the pin bundle; they are defined as

$$T_{NORM} = \frac{T - T_{in}}{T_{out} - T_{in}} \tag{6.1}$$

and are calculated for each run in which power was supplied to the bundle.

Explanations of abbreviations used for the instrumentation descriptions are also presented in Appendix D; an instrumentation listing is given in Appendix C and includes instrument names, descriptions, and x, y, and z coordinates for the bundle thermocouples.

Several corrections and modifications to bundle 3C steady-state data are given in Appendix B. These corrections must be used when analyzing the results of Appendix D.

REFERENCES

1. M. H. Fontana et al., *Temperature Distribution in a 19-Rod Simulated LMFBR Fuel Assembly with a Six-Channel Internal Blockage (Fuel Failure Mockup Bundle 3A) — Record of Experimental Data*, ORNL/TM-5101 (March 1976).

2. J. L. Wantland et al., *Sodium Boiling Tests in a 19-Rod Bundle with a Central Blockage — Record of Experimental Data for Fuel Failure Mockup Bundle 3B*, ORNL/TM-5458 (October 1976).

3. N. Hanus et al., *Local Sodium Boiling in a Partially Blocked Simulated LMFBR Subassembly (THORS Bundle 3B)*, ORNL/TM-5862 (June 1977).

4. M. H. Fontana et al., *Temperature Distribution in a 19-Rod Simulated LMFBR Fuel Assembly in a Scalloped Duct (Fuel Failure Mockup Bundle 1B) — Record of Experimental Data*, ORNL/TM-4939 (November 1975).

5. M. H. Fontana et al., *Temperature Distribution in a 19-Rod Simulated LMFBR Fuel Assembly in a Hexagonal Duct (Fuel Failure Mockup Bundle 2A) — Record of Experimental Data*, ORNL/TM-4113 (September 1973).

6. M. H. Fontana et al., *Temperature Distribution in a 19-Rod Simulated LMFBR Fuel Rod Bundle with Inlet Blockages (FFM Bundle 2B)*, ORNL/TM-4367 (January 1974).

7. M. H. Fontana et al., *Temperature Distribution in a 19-Rod Simulated LMFBR Fuel Assembly with an Edge Blockage (Out-of-Reactor Test for ANL FEFP P1 Experiment) — Record of Experimental Data for Fuel Failure Mockup Bundle 5A*, ORNL/TM-4633 (November 1974).

8. M. H. Fontana et al., *Temperature Distribution in a 19-Rod Simulated LMFBR Fuel Assembly with and without an Edge Blockage (Out-of-Reactor Tests for ANL SLSF P1 Experiment) — Record of Experimental Data for Fuel Failure Mockup Bundles 5B and 5C*, ORNL/TM-5003 (January 1976).

9. J. L. Wantland et al., *Transient Temperature Distributions in a 19-Rod Bundle during Operation to Sodium Boiling — Record of Experimental Data for Fuel Failure Mockup Bundle 5D*, ORNL/TM-5580 (February 1977).

10. J. L. Wantland et al., *Steady-State Sodium Tests in a 19-Pin Full-Length Simulated LMFBR Fuel Assembly – Record of Steady-State Experimental Data for THORS Bundle 6A,* ORNL/TM-6106 (March 1978).

11. A. G. Grindell and R. E. MacPherson, *Final Systems Design Description of the Fuel Failure Mockup of the LMFBR,* ORNL/TM-3656 (September 1972).

12. R. D. Stulting, *Electronic Circuit for the Protection of Cartridge Heaters Simulating Fast Reactor Fuel,* ORNL/TM-3693 (July 1972).

13. W. R. Miller, *High-Temperature Pressure Transmitter Evaluation,* ORNL/TM-2483 (July 25, 1958).

14. R. G. Affel, G. H. Burger, and C. L. Pearce, *Calibration and Testing of 2 and 3 1/2 in. Magnetic Flowmeters for High-Temperature NaK Service,* ORNL/TM-2793 (Mar. 21, 1960).

15. M. H. Fontana and J. L. Wantland, *LMFBR Safety and Core Systems Programs Progress Report for January–March 1975,* ORNL/TM-4980.

16. M. H. Fontana and J. L. Wantland, *LMFBR Safety and Core Systems Programs Progress Report for April–June 1975,* ORNL/TM-5076.

APPENDICES

Appendix A

BUNDLE 3C AND THORS LOOP SPECIFICATIONS

Bundle 3C

Number of pins	31
Coolant	Sodium
Number of flow channels blocked	6 (8.1% of total flow area)
Pin diameter, mm (in.)	5.84 (0.230)
Wire-wrap diameter, mm (in.)	1.42 (0.056)
Wire-wrap axial pitch, mm (in.)	305 (12.0)
Coolant flow area, cm^2 ($in.^2$)	
Heated section	6.35 (0.984)
Simulated fission gas plenum	4.320 (0.670)
100% nominal flow, ℓ/s (gpm)[a]	4.55 (72.0)
Length of heated section, mm (in.)	533 (21.0)
Length of simulated fission gas plenum, mm (in.)	1574 (62.0)
Blockage location, mm (in.) from start of heated section	381 (15.0)
Blockage thickness, mm (in.)	6.35 (0.250)
Fuel pin simulators	
Heating element material	Nichrome V
Heating element configuration	Uniform pitch, swaged wire
Axial power distribution	Uniform
Maximum rated average power per pin, kW	14.9
Clad thickness, mm (in.)	0.38 (0.015)
Clad material	316 annealed stainless steel
Duct wall thickness, mm (in.)	4.70–8.23 (0.185–0.324)
Duct material	304 stainless steel
Wire-wrap material	304 stainless steel
Average atmospheric pressure, kPa (psia)	98.66 (14.3)

THORS loop

Heat exchanger	
Type	Sodium-air
Rated heat dump capability	440 kW @ 1000°F HX outlet temperature
Pump	
Type	Centrifugal
Maximum capacity, gpm	600
Cover gas	Argon @ 5 psig
Test section bypass line (valve fully open)	
Maximum flow area, cm^2 ($in.^2$)	63.8 (9.89)
Minimum flow area, cm^2 ($in.^2$)	47.7 (7.39)
Expansion tank	
Volume, m^3 (ft^3)	0.183 (6.48)
Cover gas	Argon @ 5 psig

[a] 100% nominal flow corresponds to 7.38 m/sec (24.2 fps) in the heated section of the bundle.

Appendix B

CORRECTIONS TO DATA

Test Section Inlet Flow

All the sodium flow measured with the test section inlet flowmeter does not pass through the bundle. A certain fraction bypasses the rod bundle through a helical-thread labyrinth seal between the test section housing and the bundle duct. This seal is located approximately 200 mm (8 in.) upstream from the start of the heated section (see Fig. 4). The average seal clearance is 0.02 mm (0.0009 in.). The bypass flow through this gap was analytically estimated* as a function of measured test section flow and labyrinth pressure drop. The values are listed in Table B.1.

Table B.1. Bundle 3C labyrinth bypass flow

Total test section flow (gpm)	Seal leakage (gpm)	Percentage of total test section flow
7.9	0.0057	0.07
14.4	0.0171	0.12
20.4	0.0409	0.20
43.2	0.181	0.42
58.8	0.310	0.53
72.0	0.573	0.80

This labyrinth bypass flow must be subtracted from all readings for "Test Section Flow In" in Appendix D in order to obtain the actual flow through the rod bundle. The labyrinth bypass flow is a function of test section inlet flow; the values are given in Table B.1.

*J. T. Han, "Sodium Leakage through the Labyrinth Seal in THORS Bundle 3C," internal memorandum to N. Hanus, Jan. 24, 1978.

Pressure Measurements

All pressure data recorded and presented in Appendix D include the static pressure head of sodium (see Fig. 10). To convert the pressure measurements from pounds per square inch gage to pounds per square inch absolute, the average atmospheric pressure during the test program (14.3 psi) must be added to the indicated measurement.

Appendix C

BUNDLE 3C INSTRUMENT LISTINGS

The following abbreviations are used in Appendices C and D:

AJ	Adjacent
BOT	Bottom
BYP	Bypass
CH	Flow channel
CTR	Center
DAS	Data acquisition system
DEG	Degree
EXP	Expansion tank
HTR	Heater
IN	(as in "37 IN") — Inches downstream from start of heated section
IN	(as in "X,Y,Z" dimensions) — Inches from the bundle origin as described on the next pages
MV	Millivolts
OP	Opposite
PRESS	Pressure
REF	Reference
RAD	Radiator
SECT	Section
SOD	Sodium
TC	Thermocouple
TS	Test section
WW	Wire wrap

Explanation of Bundle 3C Instrument Listing

The instrumentation listed for Bundle 3C consists of bundle thermocouples and various facility flow, power, pressure, and temperature measurements. Each instrument is identified by name.

Heater internal thermocouples are identified by the letter "R" as the first character of the instrument name. The remaining characters

give the number of the heater in which the thermocouple is located, the axial position downstream from the start of the heated section, and the thermal elements forming the grounded thermocouple junction, all of which are shown in Fig. 11. The five thermal elements installed inside the heaters are axially spaced 1/4 in. apart. (See Fig. 11 for specific location of the thermal elements.) For example, "R0115AB: denotes a grounded internal thermocouple in heater 1 at 15.125 in. from the start of the heated section, with its junction formed by the thermal elements A and B.

Wire-wrap thermocouples are identified by either the letter "H" or a number as the first character of the instrument name. The characters "H1201U" denote an ungrounded wire-wrap thermocouple on heater 12 at an axial position of 1 in. from the start of the heated section. If the axial position number is followed by an "A," this indicates a grounded wire-wrap thermocouple adjacent to the heater surface; a "B" following the axial position number indicates a grounded wire-wrap thermocouple on the opposite side of the wire wrap, that is, adjacent to the sodium flow and approximately in the center of the flow channel, as shown in Fig. 11. The characters "0125U" denote an ungrounded wire-wrap thermocouple on heater 1 at an axial position of 25 in. from the start of the heated section (simulated fission gas plenum). (See Fig. 12.)

Duct wall thermocouples are identified by the letter "D" as the first character of the instrument name. These duct wall thermocouples measure the temperature 0.005 to 0.010 in. from the inner surface of the flow duct. The remaining characters give the channel number where the thermocouple is located followed by the axial position downstream from the start of the heated section. For example, "D3819" indicates a duct wall thermocouple in channel 38 at an axial position of 19 in. from the start of the heated section.

The X, Y, and Z coordinates that are presented in the instrument list for the bundle thermocouples are computed as follows. In reference to Fig. 11, the center of heater 1 is at the location X = 0, Y = 0, and Z = 0, where Z = 0 is at the start of the heated section. A line drawn through the center of heaters 16, 6, 1, 3, and 10 is defined as the X-axis, and a line drawn through the center of heaters 19, 1, and 13 is

defined as the Y-axis. Radial measurements from the center of heater 1 determine the values of X and Y. The Z value is measured axially from the start of the heated section to the axial position of the thermocouple.

BUNDLE 3C INSTRUMENT LIST (10/17/77)

BUNDLE THERMOCOUPLES

CHANNEL NO.	INSTRUMENT NAME	INSTRUMENT DESCRIPTION	LOCATION X (IN)	Y (IN)	Z (IN)
31	R0115AB	HTR TC IN HTR 01,15.1 IN	.0991	.0131	15.125
32	R0115BC	HTR TC IN HTR 01,15.4 IN	.0924	.0383	15.375
33	R0116CD	HTR TC IN HTR 01,15.6 IN	.0793	.0609	15.625
34	R0116DE	HTR TC IN HTR 01,15.9 IN	.0609	.0793	15.875
41	R0215AB	HTR TC IN HTR 02,15.1 IN	.0637	.1868	15.125
43	R0215BC	HTR TC IN HTR 02,15.4 IN	.0821	.1683	15.375
44	RC216CD	HTR TC IN HTR 02,15.6 IN	.1047	.1553	15.625
253	R0216DE	HTR TC IN HTR 02,15.9 IN	.1299	.1485	15.875
46	R0315AB	HTR TC IN HTR 03,15.1 IN	.1936	.0383	15.125
47	RC315BC	HTR TC IN HTR 03,15.4 IN	.1869	.0131	15.375
48	R0316CD	HTR TC IN HTR 03,15.6 IN	.1869	-.0131	15.625
49	R0316DE	HTR TC IN HTR 03,15.9 IN	.1936	-.0383	15.875
50	R0416AB	HTR TC IN HTR 04,16.1 IN	.1299	-.1485	16.125
51	R0416BC	HTR TC IN HTR 04,16.4 IN	.1047	-.1553	16.375
52	R0417CD	HTR TC IN HTR 04,16.6 IN	.0821	-.1683	16.625
53	R0417DE	HTR TC IN HTR 04,16.9 IN	.0637	-.1868	16.875
60	RC516AB	HTR TC IN HTR 05,16.1 IN	-.0637	-.1868	16.125
61	R0516BC	HTR TC IN HTR 05,16.4 IN	-.0821	-.1683	16.375
62	R0517CD	HTR TC IN HTR 05,16.6 IN	-.1047	-.1553	16.625
254	R0517DE	HTR TC IN HTR 05,16.9 IN	-.1299	-.1485	16.875
64	R0615AB	HTR TC IN HTR 06,15.1 IN	-.1936	-.0383	15.125
65	R0615BC	HTR TC IN HTR 06,15.4 IN	-.1869	-.0131	15.375
66	R0616CD	HTR TC IN HTR 06,15.6 IN	-.1869	.0131	15.625
67	R0616DE	HTR TC IN HTR 06,15.9 IN	-.1936	.0383	15.875
68	RC716AB	HTR TC IN HTR 07,16.1 IN	-.1299	.1485	16.125
69	R0716BC	HTR TC IN HTR 07,16.4 IN	-.1047	.1553	16.375
70	R0717CD	HTR TC IN HTR 07,16.6 IN	-.0821	.1683	16.625
71	RC717DE	HTR TC IN HTR 07,16.9 IN	-.0637	.1868	16.875
78	RC812AB	HTR TC IN HTR 08,12AB IN	.2067	.4345	12.
79	R0812BC	HTR TC IN HTR 08,12BC IN	.2251	.416	12.
80	RC915AB	HTR TC IN HTR 09,15AB IN	.3366	.2094	15.
205	RC915BC	HTR TC IN HTR 09,158C IN	.3497	.1868	15.
82	R1015AB	HTR TC IN HTR 10,15AB IN	.4796	.0383	15.
83	R1015BC	HTR TC IN HTR 10,15BC IN	.4729	.0131	15.
84	R1118AB	HTR TC IN HTR 11,18AB IN	.3497	-.1868	18.
85	R1118BC	HTR TC IN HTR 11,18BC IN	.3366	-.2094	18.
86	R1218AB	HTR TC IN HTR 12,18AB IN	.2729	-.3962	18.
87	R1218BC	HTR TC IN HTR 12,18BC IN	.2477	-.403	18.
88	R1312AB	HTR TC IN HTR 13,12AB IN	.0131	-.3962	12.
89	R1312BC	HTR TC IN HTR 13,12BC IN	-.0131	-.3962	12.
95	R1418AB	HTR TC IN HTR 14,18AB IN	-.3243	-.5878	18.
96	R1418BC	HTR TC IN HTR 14,18BC IN	-.2991	-.5945	18.
97	R1515AB	HTR TC IN HTR 15,15.1 IN	-.3299	-.2346	15.125
98	R1515BC	HTR TC IN HTR 15,15.4 IN	-.3366	-.2094	15.375
99	R1516CD	HTR TC IN HTR 15,15.6 IN	-.3497	-.1868	15.625

100	R1516DE	HTR	TC	IN	HTR	15,15.9	IN	-.3681	-.1683	15.875
101	R1615BC	HTR	TC	IN	HTR	16,15BC	IN	-.6644	-.0383	15.
102	R1718BC	HTR	TC	IN	HTR	17,18BC	IN	-.3366	.2094	18.
103	R1812AB	HTR	TC	IN	HTR	18,12AB	IN	-.3469	.5747	12.
104	R1812BC	HTR	TC	IN	HTR	18,12BC	IN	-.3653	.5562	12.
245	R1912AB	HTR	TC	IN	HTR	19,12AB	IN	-.0131	.3962	12.
246	R1912BC	HTR	TC	IN	HTR	19,12BC	IN	.0131	.3962	12.
105	R2116AB	HTR	TC	IN	HTR	21,16.1	IN	.4729	.4823	16.125
106	R2116BC	HTR	TC	IN	HTR	21,16.4	IN	.4796	.4571	16.375
107	R2117CD	HTR	TC	IN	HTR	21,16.6	IN	.4927	.4345	16.625
146	R2117DE	HTR	TC	IN	HTR	21,16.9	IN	.5111	.416	16.875
171	R2212AB	HTR	TC	IN	HTR	22,12AB	IN	.6226	.2094	12.
172	R2212BC	HTR	TC	IN	HTR	22,12BC	IN	.6357	.1868	12.
173	R2415AB	HTR	TC	IN	HTR	24,15.1	IN	.6541	-.1683	15.125
174	R2415BC	HTR	TC	IN	HTR	24,15.4	IN	.6357	-.1868	15.375
175	R2416CD	HTR	TC	IN	HTR	24,15.6	IN	.6226	-.2094	15.625
176	R2416DE	HTR	TC	IN	HTR	24,15.9	IN	.6159	-.2346	15.875
177	R2515BC	HTR	TC	IN	HTR	25,15BC	IN	.4927	-.4345	15.
178	R2716AB	HTR	TC	IN	HTR	27,16.1	IN	.1813	-.6507	16.125
179	R2716BC	HTR	TC	IN	HTR	27,16.4	IN	.1561	-.6439	16.375
180	R2717CD	HTR	TC	IN	HTR	27,16.6	IN	.1299	-.6439	16.625
181	R2717DE	HTR	TC	IN	HTR	27,16.9	IN	.1047	-.6507	16.875
182	R2818BC	HTR	TC	IN	HTR	28,18BC	IN	-.2223	-.8039	18.
183	R3018AB	HTR	TC	IN	HTR	30,18AB	IN	-.4796	-.4571	18.
184	R3018BC	HTR	TC	IN	HTR	30,18BC	IN	-.4927	-.4345	18.
185	R3116AB	HTR	TC	IN	HTR	31,16.1	IN	-.6159	-.2346	16.125
186	R3116BC	HTR	TC	IN	HTR	31,16.4	IN	-.6226	-.2094	16.375
187	R3117CD	HTR	TC	IN	HTR	31,16.6	IN	-.6357	-.1868	16.625
188	R3117DE	HTR	TC	IN	HTR	31,16.9	IN	-.6541	-.1683	16.875
189	R3315AB	HTR	TC	IN	HTR	33,15.1	IN	-.6541	.1683	15.125
190	R3315BC	HTR	TC	IN	HTR	33,15.4	IN	-.6357	.1868	15.375
191	R3316CD	HTR	TC	IN	HTR	33,15.6	IN	-.6226	.2094	15.625
192	R3316DE	HTR	TC	IN	HTR	33,15.9	IN	-.6159	.2346	15.875
193	R3415AB	HTR	TC	IN	HTR	34,15.1	IN	-.5112	.416	15.125
194	R3415BC	HTR	TC	IN	HTR	34,15.4	IN	-.4927	.4345	15.375
195	R3416CD	HTR	TC	IN	HTR	34,15.6	IN	-.4796	.4571	15.625
196	R3416DE	HTR	TC	IN	HTR	34,15.9	IN	-.4729	.4823	15.875
197	R3615AB	HTR	TC	IN	HTR	36,15.1	IN	-.1813	.6507	15.125
198	R3615BC	HTR	TC	IN	HTR	36,15.4	IN	-.1561	.6439	15.375
199	R3616CD	HTR	TC	IN	HTR	36,15.6	IN	-.1299	.6439	15.625
200	R3616DE	HTR	TC	IN	HTR	36,15.9	IN	-.1047	.6507	15.875
201	R3716AB	HTR	TC	IN	HTR	37,16.1	IN	.0637	.6822	16.125
202	R3716BC	HTR	TC	IN	HTR	37,16.4	IN	.0821	.6637	16.375
203	R3717CD	HTR	TC	IN	HTR	37,16.6	IN	.1047	.6507	16.625
204	R3717DE	HTR	TC	IN	HTR	37,16.9	IN	.1299	.6439	16.875
240	H12-1U	WW	TC	ON	HTR	12,-1	IN	.286	-.3524	-1.
30	H16-1L	WW	TC	ON	HTR	16,-1	IN	-.572	.143	-1.
23	H1201L	WW	TC	ON	HTR	12,01	IN	.1622	-.4239	1.
35	H1609U	WW	TC	ON	HTR	16,09	IN	-.4482	.0715	9.
7	H0411U	WW	TC	ON	HTR	04,11	IN	.143	-.1047	11.
9	H0511L	WW	TC	ON	HTR	05,11	IN	-.143	-.1047	11.
24	H1311U	WW	TC	ON	HTR	13,11	IN	0.	-.3524	11.
36	H1711U	WW	TC	ON	HTR	17,11	IN	-.429	.3907	11.
77	H2811L	WW	TC	ON	HTR	28,11	IN	-.143	-.6	11.
92	H3111L	WW	TC	ON	HTR	31,11	IN	-.715	-.1047	11.
206	H0313U	WW	TC	ON	HTR	03,13	IN	.1622	.0715	13.
20	H1113L	WW	TC	ON	HTR	11,13	IN	.3052	-.1762	13.
25	H1313L	WW	TC	ON	HTR	13,13	IN	-.1238	-.4239	13.
28	H1513U	WW	TC	ON	HTR	15,13	IN	-.5528	-.1762	13.
37	H1713U	WW	TC	ON	HTR	17,13	IN	-.5528	.3192	13.
57	H2213L	WW	TC	ON	HTR	22,13	IN	.5912	.3192	13.
2	H0115U	WW	TC	ON	HTR	01,15	IN	-.1238	-.0715	15.
6	H0315U	WW	TC	ON	HTR	03,15	IN	.1622	-.0715	15.

207	HC815U	WW	TC	ON	HTR	C8,15	IN	.1622	.4239	15.
18	H1015L	WW	TC	ON	HTR	10,15	IN	.4482	-.0715	15.
29	H1515U	WW	TC	ON	HTR	15,15	IN	-.5528	-.3192	15.
40	H1915L	WW	TC	ON	HTR	19,15	IN	-.1238	.4239	15.
73	H2515L	WW	TC	ON	HTR	25,15	IN	.4482	-.5669	15.
150	H3615U	WW	TC	ON	HTR	36,15	IN	-.2668	.6715	15.
3	H0117U	WW	TC	ON	HTR	01,17	IN	0.	-.143	17.
4	HC217A	WW	TC	AJ	HTR	C2,17	IN	.143	.1327	17.
5	HC217B	WW	TC	OP	HTR	C2,17	IN	.143	.0767	17.
15	H0817U	WW	TC	ON	HTR	C8,17	IN	.286	.3524	17.
19	H1017L	WW	TC	ON	HTR	10,17	IN	.572	-.143	17.
21	H1117L	WW	TC	ON	HTR	11,17	IN	.429	-.3907	17.
38	H1817U	WW	TC	ON	HTR	18,17	IN	-.286	.3524	17.
54	H1917L	WW	TC	ON	HTR	19,17	IN	0.	.3524	17.
55	H2117L	WW	TC	ON	HTR	21,17	IN	.572	.3524	17.
58	H2217U	WW	TC	ON	HTR	22,17	IN	.715	.1047	17.
94	H3317U	WW	TC	ON	HTR	33,17	IN	-.715	.1047	17.
152	H3717L	WW	TC	ON	HTR	37,17	IN	.143	.6	17.
11	HC619U	WW	TC	ON	HTR	C6,19	IN	-.1622	-.0715	19.
13	H0719A	WW	TC	AJ	HTR	C7,19	IN	-.0332	.1855	19.
14	HC719B	WW	TC	OP	HTR	07,19	IN	-.0052	.1668	19.
16	HC919L	WW	TC	ON	HTR	C9,19	IN	.5528	.1762	19.
26	H1419U	WW	TC	ON	HTR	14,19	IN	-.1622	-.5669	19.
39	H1819L	WW	TC	ON	HTR	18,19	IN	-.1622	.4239	19.
75	H2719L	WW	TC	ON	HTR	27,19	IN	.2668	-.8145	19.
90	H3019U	WW	TC	ON	HTR	30,19	IN	-.4482	-.5669	19.
148	H3419U	WW	TC	ON	HTR	34,19	IN	-.4482	.4239	19.
151	H3619L	WW	TC	ON	HTR	36,19	IN	-.0192	.6715	19.
153	H3719U	WW	TC	ON	HTR	37,19	IN	.2668	.6715	19.
10	H0521U	WW	TC	ON	HTR	C5,21	IN	-.0192	-.1762	21.
12	HC621U	WW	TC	ON	HTR	C6,21	IN	-.1622	.0715	21.
56	H2121L	WW	TC	ON	HTR	21,21	IN	.6958	.5669	21.
59	H2421U	WW	TC	ON	HTR	24,21	IN	.8388	-.1762	21.
74	H2521L	WW	TC	ON	HTR	25,21	IN	.6958	-.4239	21.
76	H2721L	WW	TC	ON	HTR	27,21	IN	.2668	-.6715	21.
91	H3021U	WW	TC	ON	HTR	30,21	IN	-.4482	-.4239	21.
147	H3321U	WW	TC	ON	HTR	33,21	IN	-.5912	.3192	21.
149	H3421L	WW	TC	ON	HTR	34,21	IN	-.4482	.5669	21.
8	HC423U	WW	TC	ON	HTR	C4,23	IN	.143	-.1047	23.
17	H0923U	WW	TC	ON	HTR	C9,23	IN	.429	.3907	23.
27	H1423L	WW	TC	ON	HTR	14,23	IN	-.286	-.3524	23.
72	H2423L	WW	TC	ON	HTR	24,23	IN	.715	-.1047	23.
108	H2823U	WW	TC	ON	HTR	28,23	IN	-.143	-.6	23.
93	H3123L	WW	TC	ON	HTR	31,23	IN	-.715	-.1047	23.
159	C125L	WW	TC	ON	ROD	C1,25	IN	-.1238	.0715	25.25
161	0225U	WW	TC	ON	ROD	C2,25	IN	.0192	.3192	25.25
167	0525U	WW	TC	ON	ROD	05,25	IN	-.2668	-.1762	25.25
223	C825L	WW	TC	ON	ROD	C8,25	IN	.1622	.5669	25.25
229	1425U	WW	TC	ON	ROD	14,25	IN	-.4098	-.4239	25.25
165	0427U	WW	TC	ON	ROD	C4,27	IN	.0192	-.3192	27.25
250	0727U	WW	TC	ON	ROD	C7,27	IN	-.2668	.1762	27.25
227	1227L	WW	TC	ON	ROD	12,27	IN	.1622	-.5669	27.25
208	1627U	WW	TC	ON	ROD	16,27	IN	-.6958	-.0715	27.25
210	1827L	WW	TC	ON	ROD	18,27	IN	-.4098	.4239	27.25
163	C329L	WW	TC	ON	ROD	C3,29	IN	.286	-.143	29.25
169	C629U	WW	TC	ON	ROD	C6,29	IN	-.286	-.143	29.25
225	1C29U	WW	TC	ON	ROD	10,29	IN	.572	-.143	29.25
160	C137L	WW	TC	ON	ROD	C1,37	IN	-.1238	.0715	37.25
252	0237U	WW	TC	ON	ROD	C2,37	IN	.0192	.3192	37.25
168	0537U	WW	TC	ON	ROD	C5,37	IN	-.2668	-.1762	37.25
224	C837U	WW	TC	ON	ROD	C8,37	IN	.1622	.5669	37.25
230	1437L	WW	TC	ON	ROD	14,37	IN	-.4098	-.4239	37.25
166	0451U	WW	TC	ON	ROD	C4,51	IN	.0192	-.3192	51.25

220	0751U	WW TC ON ROD 07,51 IN	-.2668	.1762	51.25
228	1251U	WW TC ON ROD 12,51 IN	.1622	-.5669	51.25
209	1651U	WW TC ON ROD 16,51 IN	-.6958	-.0715	51.25
211	1851U	WW TC ON ROD 18,51 IN	-.4098	.4239	51.25
164	C363U	WW TC ON ROD C3,63 IN	.1622	-.0715	63.25
170	0663U	WW TC ON ROD C6,63 IN	-.4098	-.0715	63.25
226	1063U	WW TC ON ROD 10,63 IN	.4482	-.0715	63.25
155	D3819	DUCT WALL TC,CH 38,19 IN	.3855	-.6677	19.
249	D5319	DUCT WALL TC,CH 53,19 IN	-.3855	.6677	19.
154	C2821	DUCT WALL TC,CH 28,21 IN	.3855	.6677	21.
156	C4321	DUCT WALL TC,CH 43,21 IN	-.3855	-.6677	21.
157	D4421	DUCT WALL TC,CH 44,21 IN	-.6715	-.5852	21.

REMAINING INSTRUMENTATION

111	EWM-A	HTR POWER IN ROD 1(KW)
112	EWM-B	HTR POWER IN RODS 8,9,10
113	EWM-C	HTR POWER IN RODS 14,15,16
114	EWM-D	HTR POWER IN RODS 2,3,11,19
115	EWM-E	HTR POWER IN RODS 5,6,13,17
116	EWM-F	HTR POWER IN RODS 4,7,12,18
22	EWM-H	HTR POWER IN RODS 30,31
45	EWM-J	HTR POWER IN RODS 24,25,27,28
63	EWM-K	HTR POWER IN RODS 33,34
81	EWM-L	HTR POWER IN RODS 21,22,36,37
117	EWM-T	HTR POWER TOTAL(KW)
121	FE-27	LOOP FLOW TOTAL(GPM)
118	FE-277	TEST SECTION(TS) FLOW IN(GPM)
125	FE-278	TS FLOW OUT(GPM)
214	FE-279	TS BYPASS FLOW(GPM)
251	FE-31	TS(OLD) FLOW IN
126	FE-46	RADIATOR AIR FLOW
122	PE-1	PUMP OUT PRESS(PSIG)
119	PE-254	TS INLET PRESS(PSIG)
217	PE-257	TS LINE PRESS INLET(PSIG)
120	PE-259	TS OUTLET PRESS(PSIG)
241	PE-261	EXP TANK ARGON PRESS(PSIG)
218	PE-280	TS BYP LINE PRESS IN(PSIG)
219	PE-282	TS BYP LINE PRESS OUT(PSIG)
109	TC-365	TEST SECT INLET WELL(DEG F)
110	TC-370	TEST SECT OUTLET WELL(DEG F)
238	TC-707	EXP TANK SODIUM TC(DEG F)
239	TC-708	EXP TANK ARGON TC(DEG F)
143	TC-318	RAD IN PIPE WALL TC
144	TC-334	RAD OUT PIPE WALL TC
145	TC-336	PUMP IN PIPE WALL TC
142	TC-300	PUMP OUT PIPE WALL TC
133	TC-366	TS SHELL-BOT(DEG F)
134	TC-366	TS GUARD HTR-BOT
135	TC-366B	TS HTR-BOT
136	TC-367	TS SHELL-LOW CTR
137	TC-367A	TS GUARD HTR-LOW CTR
127	TC-368	TS SHELL-UP CTR
247	TC-368A	TS GUARD HTR-UP CTR
248	TC-368B	TS HTR-UP CTR
139	TC-369	TS SHELL-TOP
140	TC-369A	TS GUARD HTR-TOP
141	TC-369B	TS HTR-TOP
138	TC-367B	TS HTR-LOW CTR
232	TCFE277	PIPE TC-A AJ FLOW IN
233	TCFE277	PIPE TC-B AJ FLOW IN
234	TCFE278	PIPE TC-A AJ FLOW OUT
235	TCFE278	PIPE TC-B AJ FLOW OUT

```
236 TCFE279 PIPE TC-A AJ BYP FLOW
237 TCFE279 PIPE TC-B AJ BYP FLOW
 42 TCFE27A PIPE TC-A AJ TOTAL FLOW LEADS
231 TCFE27B PIPE TC-B AJ TOTAL FLOW LEADS
130 REF BOX 150 DEG REF BOX 1(DEG F)
131 REF BOX 150 DEG REF BOX 2
132 REF BOX 150 DEG REF BOX 3
212 REF BOX 150 DEG REF BOX 4
213 REF BOX 150 DEG REF BOX 5
124 SE-212  RADIATOR BLOW SPEED
123 SE-62   SOD PUMP SPEED(RPM)
162 K13D    START PUMP COAST DOWN
158 LE-276  EXPANSION TANK LEVEL
```

Appendix D

BUNDLE 3C STEADY-STATE TEST DATA

The thermocouples listed in Table D.1 were found to have erroneous temperature readings when compared to the other thermocouples. Most of the thermocouples listed in Table D.1 have unexpectedly low or high temperature readings; others (as noted in the table) have unacceptable standard deviations.

All abbreviations used in this appendix are explained on the first page of Appendix C.

Table D.1. Listing of thermocouples with doubtful readings

Test No.	Run No.	Instrument
10	101	HTR TC in HTR 34, 15.4 in.[a]
10	102	HTR TC in HTR 34, 15.4 in.
10	103	HTR TC in HTR 34, 15.4 in.
10	104	HTR TC in HTR 34, 15.4 in.
10	106	HTR TC in HTR 34, 15.4 in.
10	107	HTR TC in HTR 34, 15.4 in.
10	108	HTR TC in HTR 34, 15.4 in.
10	115	HTR TC in HTR 34, 15.4 in.[a]
		WW TC on HTR 12, 01 in.[a]
10	116	HTR TC in HTR 34, 15.4 in.
		WW TC on HTR 12, 01 in.[a]
10	117	HTR TC in HTR 34, 15.4 in.[a]
10	118	HTR TC in HTR 34, 15.4 in.[a]
10	119	HTR TC in HTR 34, 15.4 in.
10	124	HTR TC in HTR 34, 15.4 in.
10	127	HTR TC in HTR 34, 15.4 in.
		HTR TC in HTR 34, 16.6 in.
10	128	HTR TC in HTR 34, 15.4 in.
		HTR TC in HTR 34, 16.6 in.
10	133	HTR TC in HTR 34, 15.4 in.
		HTR TC in HTR 34, 16.6 in.
10	136	HTR TC in HTR 34, 15.5 in.
		HTR TC in HTR 34, 16.6 in.
10	137	HTR TC in HTR 34, 15.4 in.
		HTR TC in HTR 34, 16.6 in.
10	121	HTR TC in HTR 24, 15.1 in.
		HTR TC in HTR 24, 15.4 in.
		HTR TC in HTR 34, 15.4 in.
10	125	HTR TC in HTR 24, 15.1 in.
		HTR TC in HTR 24, 15.4 in.
		HTR TC in HTR 34, 15.4 in.
		HTR TC in HTR 34, 16.6 in.
10	130	HTR TC in HTR 24, 15.1 in.
		HTR TC in HTR 24, 15.4 in.
		HTR TC in HTR 34, 16.6 in.
10	131	HTR TC in HTR 24, 15.1 in.
		HTR TC in HTR 24, 15.4 in.
10	134	HTR TC in HTR 24, 15.1 in.
		HTR TC in HTR 24, 15.4 in.
10	109	HTR TC in HTR 24, 15.1 in.
		HTR TC in HTR 24, 15.4 in.
		HTR TC in HTR 34, 15.4 in.
10	110	HTR TC in HTR 24, 15.1 in.
		HTR TC in HTR 34, 15.4 in.
10	112	HTR TC in HTR 34, 15.1 in.
10	113	HTR TC in HTR 34, 15.4 in.
11	121	HTR TC in HTR 30, 18AB in.
		HTR TC in HTR 30, 18BC in.
11	131	HTR TC in HTR 30, 18AB in.
		HTR TC in HTR 30, 18BC in.
11	151	HTR TC in HTR 30, 18AB in.
		HTR TC in HTR 30, 18BC in.
11	161	HTR TC in HTR 30, 18AB in.
		HTR TC in HTR 30, 18BC in.
11	111	HTR TC in HTR 30, 18AB in.
		HTR TC in HTR 30, 18BC in.
11	115	HTR TC in HTR 30, 18AB in.
		HTR TC in HTR 30, 18BC in.
11	116	HTR TC in HTR 30, 18AB in.
		HTR TC in HTR 30, 18BC in.
11	117	HTR TC in HTR 30, 18AB in.
		HTR TC in HTR 30, 18BC in.
11	162	HTR TC in HTR 30, 18AB in.
		HTR TC in HTR 30, 18BC in.
11	163	HTR TC in HTR 30, 18AB in.
		HTR TC in HTR 30, 18BC in.
11	164	HTR TC in HTR 30, 18AB in.
		HTR TC in HTR 30, 18BC in.

[a]Good temperature reading, bad standard deviation.

TEST SERIES 10(BUNDLE 3C); TEST 2 RUN 100A 11/17/78 11 26 7

CONDITIONS:

TEST SECTION FLOW: 0.5 L/S (7.3 GPM)
TEST SECTION POWER: 0.0 KW

TEST SECTION INLET TEMPERATURE: 429 DEG C (805 DEG F)
TEST SECTION OUTLET TEMPERATURE: 430 DEG C (807 DEG F)

HEAT BALANCE:

NOT APPLICABLE FOR THIS TEST

INSTRUMENT	20-SEC AVG	STD DEV
FLOWS		
TEST SECTION(TS) FLOW IN(GPM)	7.3	0.4
TS FLOW OUT(GPM)	7.0	0.4
TS BYPASS FLOW(GPM)	1.9	0.3
LOOP FLOW TOTAL(GPM)	7.1	0.8
RADIATOR AIR FLOW(CFM)	1.1	0.0
PRESSURES		
TS IN PRESS(PSIG)	9.4	0.3
TS OUT PRESS(PSIG)	5.5	0.2
PUMP OUT PRESS(PSIG)	6.9	0.2
TS LINE PRESS IN(PSIG)	9.9	0.3
EXP TANK ARGON PRESS(PSIG)	3.6	0.2
TS BYP LINE PRESS IN(PSIG)	10.4	0.3
TS BYP LINE PRESS OUT(PSIG)	8.5	0.3
LOOP THERMOCOUPLES		
TEST SECT INLET WELL(DEG F)	805.4	0.4
TEST SECT OUTLET WELL(DEG F)	807.2	0.4
PUMP IN PIPE WALL TC	762.7	27.1
PUMP OUT PIPE WALL TC	775.9	1.6
RAD IN PIPE WALL TC	817.2	1.0
RAD OUT PIPE WALL TC	771.0	1.2
TEST SECTION HOUSING THERMOCOUPLES		
TS SHELL-BOT(DEG F)	807.9	0.3
TS GUARD HTR-BOT	790.1	0.4
TS HTR-BOT	742.6	0.6
TS SHELL-LOW CTR	806.0	0.2
TS GUARD HTR-LOW CTR	830.5	0.6
TS HTR-LOW CTR	785.7	0.6
TS SHELL-UP CTR	814.0	0.5
TS GUARD HTR-UP CTR	846.4	0.7

Test 2, run 100A (continued)

INSTRUMENT	20-SEC AVG	STD DEV
TS HTR-UP CTR	833.5	0.8
TS SHELL-TOP	809.7	0.7
TS GUARD HTR-TOP	826.7	1.1
TS HTR-TOP	840.5	0.9
REFERENCE BOX THERMOCOUPLES		
150 DEG REF BOX 1	106.2	0.9
150 DEG REF BOX 2	105.3	0.6
150 DEG REF BOX 3	108.7	0.5
150 DEG REF BOX 4	107.0	0.2
150 DEG REF BOX 5	105.0	0.4
MISCELLANEOUS		
SOD PUMP SPEED(RPM)	381.7	49.5

TEST SERIES 10(BUNDLE 3C); TEST 2 RUN 100B 11/17/78 11 17 26

CONDITIONS:
TEST SECTION FLOW: 0.5 L/S (7.9 GPM)
TEST SECTION POWER: 0.0 KW

TEST SECTION INLET TEMPERATURE: 431 DEG C (808 DEG F)
TEST SECTION OUTLET TEMPERATURE: 430 DEG C (807 DEG F)

HEAT BALANCE:

NOT APPLICABLE FOR THIS TEST

INSTRUMENT	20-SEC AVG	STD DEV
FLOWS		
TEST SECTION(TS) FLOW IN(GPM)	7.9	0.4
TS FLOW OUT(GPM)	7.7	0.4

Test 2, run 100B (continued)

INSTRUMENT	20-SEC AVG	STD DEV
TS BYPASS FLOW(GPM)	1.8	0.3
LOOP FLOW TOTAL(GPM)	7.8	0.8
RADIATOR AIR FLOW(CFM)	1.1	0.0
PRESSURES		
TS IN PRESS(PSIG)	9.5	0.3
TS OUT PRESS(PSIG)	5.4	0.2
PUMP OUT PRESS(PSIG)	7.2	0.2
TS LINE PRESS IN(PSIG)	10.1	0.3
EXP TANK ARGON PRESS(PSIG)	3.5	0.2
TS BYP LINE PRESS IN(PSIG)	10.7	0.3
TS BYP LINE PRESS OUT(PSIG)	8.4	0.4
LOOP THERMOCOUPLES		
TEST SECT INLET WELL(DEG F)	808.3	0.4
TEST SECT OUTLET WELL(DEG F)	807.7	0.3
PUMP IN PIPE WALL TC	761.6	27.9
PUMP OUT PIPE WALL TC	778.7	1.4
RAD IN PIPE WALL TC	814.5	0.8
RAD OUT PIPE WALL TC	773.2	0.9
TEST SECTION HOUSING THERMOCOUPLES		
TS SHELL-BOT(DEG F)	808.9	0.4
TS GUARD HTR-BOT	789.9	0.4
TS HTR-BOT	742.6	1.6
TS SHELL-LOW CTR	806.7	0.4
TS GUARD HTR-LOW CTR	830.4	0.6
TS HTR-LOW CTR	785.6	0.6
TS SHELL-UP CTR	814.3	0.6
TS GUARD HTR-UP CTR	846.1	0.8
TS HTR-UP CTR	833.4	0.8
TS SHELL-TOP	810.3	0.8
TS GUARD HTR-TOP	826.5	1.1
TS HTR-TOP	840.5	1.0
REFERENCE BOX THERMOCOUPLES		
150 DEG REF BOX 1	106.4	1.0
150 DEG REF BOX 2	105.6	0.8
150 DEG REF BOX 3	108.8	0.6
150 DEG REF BOX 4	107.1	0.3
150 DEG REF BOX 5	104.4	0.1
MISCELLANEOUS		
SOD PUMP SPEED(RPM)	418.4	51.8

TEST SERIES 10(BUNDLE 3C); TEST 2 RUN 100C 11/17/78 11 10 26

CONDITIONS:
TEST SECTION FLOW: 0.6 L/S (10.2 GPM)
TEST SECTION POWER: 0.0 KW

TEST SECTION INLET TEMPERATURE: 430 DEG C (806 DEG F)
TEST SECTION OUTLET TEMPERATURE: 431 DEG C (808 DEG F)

HEAT BALANCE:

NOT APPLICABLE FOR THIS TEST

INSTRUMENT	20-SEC AVG	STD DEV
FLOWS		
TEST SECTION(TS) FLOW IN(GPM)	10.2	0.4
TS FLOW OUT(GPM)	9.9	0.4
TS BYPASS FLOW(GPM)	1.2	0.3
LOOP FLOW TOTAL(GPM)	10.0	0.8
RADIATOR AIR FLOW(CFM)	1.2	0.0
PRESSURES		
TS IN PRESS(PSIG)	10.3	0.3
TS OUT PRESS(PSIG)	5.5	0.2
PUMP OUT PRESS(PSIG)	8.3	0.2
TS LINE PRESS IN(PSIG)	11.2	0.3
EXP TANK ARGON PRESS(PSIG)	3.5	0.2
TS BYP LINE PRESS IN(PSIG)	11.8	0.3
TS BYP LINE PRESS OUT(PSIG)	8.5	0.3
LOOP THERMOCOUPLES		
TEST SECT INLET WELL(DEG F)	806.3	0.5
TEST SECT OUTLET WELL(DEG F)	808.5	0.3
PUMP IN PIPE WALL TC	775.2	21.6
PUMP OUT PIPE WALL TC	782.2	1.3
RAD IN PIPE WALL TC	810.1	1.3
RAD OUT PIPE WALL TC	780.5	0.8
TEST SECTION HOUSING THERMOCOUPLES		
TS SHELL-BOT(DEG F)	809.3	0.2
TS GUARD HTR-BOT	789.6	0.3
TS HTR-BOT	742.6	2.0
TS SHELL-LOW CTR	806.9	0.2
TS GUARD HTR-LOW CTR	830.2	0.8
TS HTR-LOW CTR	785.7	0.5
TS SHELL-UP CTR	814.4	0.4

Test 2, run 100C (continued)

INSTRUMENT	20-SEC AVG	STD DEV
TS GUARD HTR-UP CTR	845.8	0.7
TS HTR-UP CTR	833.6	0.8
TS SHELL-TOP	810.7	1.0
TS GUARD HTR-TOP	826.4	1.4
TS HTR-TOP	840.7	1.1
REFERENCE BOX THERMOCOUPLES		
150 DEG REF BOX 1	106.2	1.0
150 DEG REF BOX 2	106.5	0.9
150 DEG REF BOX 3	109.0	0.7
150 DEG REF BOX 4	107.0	0.2
150 DEG REF BOX 5	104.5	0.2
MISCELLANEOUS		
SOD PUMP SPEED(RPM)	562.8	63.3

TEST SERIES 10(BUNDLE 3C); TEST 2 RUN 101 11/17/78 11 3 37

CONDITIONS:

TEST SECTION FLOW: 1.0 L/S (15.2 GPM)
TEST SECTION POWER: 0.0 KW

TEST SECTION INLET TEMPERATURE: 428 DEG C (803 DEG F)
TEST SECTION OUTLET TEMPERATURE: 430 DEG C (806 DEG F)

HEAT BALANCE:

NOT APPLICABLE FOR THIS TEST

INSTRUMENT	20-SEC AVG	STD DEV
FLOWS		
TEST SECTION(TS) FLOW IN(GPM)	15.2	0.4
TS FLOW OUT(GPM)	15.1	0.4

Test 2, run 101 (continued)

INSTRUMENT	20-SEC AVG	STD DEV
TS BYPASS FLOW(GPM)	1.3	0.3
LOOP FLOW TOTAL(GPM)	15.2	0.8
RADIATOR AIR FLOW(CFM)	1.2	0.0
PRESSURES		
TS IN PRESS(PSIG)	12.6	0.3
TS OUT PRESS(PSIG)	5.5	0.2
PUMP OUT PRESS(PSIG)	12.1	0.2
TS LINE PRESS IN(PSIG)	15.1	0.3
EXP TANK ARGON PRESS(PSIG)	3.5	0.2
TS BYP LINE PRESS IN(PSIG)	15.5	0.3
TS BYP LINE PRESS OUT(PSIG)	8.4	0.3
LOOP THERMOCOUPLES		
TEST SECT INLET WELL(DEG F)	803.2	0.4
TEST SECT OUTLET WELL(DEG F)	806.3	0.4
PUMP IN PIPE WALL TC	778.9	23.8
PUMP OUT PIPE WALL TC	786.9	1.4
RAD IN PIPE WALL TC	806.1	1.0
RAD OUT PIPE WALL TC	787.9	0.4
TEST SECTION HOUSING THERMOCOUPLES		
TS SHELL-BOT(DEG F)	806.7	0.4
TS GUARD HTR-BOT	789.6	0.4
TS HTR-BOT	743.7	13.9
TS SHELL-LOW CTR	804.7	0.4
TS GUARD HTR-LOW CTR	830.3	0.7
TS HTR-LOW CTR	785.5	0.5
TS SHELL-UP CTR	812.9	0.4
TS GUARD HTR-UP CTR	846.0	0.8
TS HTR-UP CTR	833.8	0.7
TS SHELL-TOP	807.8	0.7
TS GUARD HTR-TOP	826.0	1.0
TS HTR-TOP	840.8	1.2
REFERENCE BOX THERMOCOUPLES		
150 DEG REF BOX 1	106.2	0.7
150 DEG REF BOX 2	105.9	0.7
150 DEG REF BOX 3	109.1	0.8
150 DEG REF BOX 4	107.1	0.4
150 DEG REF BOX 5	104.6	0.3
MISCELLANEOUS		
SOD PUMP SPEED(RPM)	862.7	52.7

TEST SERIES 10(BUNDLE 3C); TEST 2 RUN 102 11/17/78 10 55 26

CONDITIONS:
TEST SECTION FLOW: 1.4 L/S (21.7 GPM)
TEST SECTION POWER: 0.0 KW

TEST SECTION INLET TEMPERATURE: 428 DEG C (802 DEG F)
TEST SECTION OUTLET TEMPERATURE: 430 DEG C (805 DEG F)

HEAT BALANCE:

NOT APPLICABLE FOR THIS TEST

INSTRUMENT	20-SEC AVG	STD DEV
FLOWS		
TEST SECTION(TS) FLOW IN(GPM)	21.7	0.4
TS FLOW OUT(GPM)	21.6	0.4
TS BYPASS FLOW(GPM)	1.1	0.3
LOOP FLOW TOTAL(GPM)	21.4	0.9
RADIATOR AIR FLOW(CFM)	1.2	0.0
PRESSURES		
TS IN PRESS(PSIG)	17.1	0.3
TS OUT PRESS(PSIG)	5.6	0.2
PUMP OUT PRESS(PSIG)	19.3	0.2
TS LINE PRESS IN(PSIG)	22.1	0.3
EXP TANK ARGON PRESS(PSIG)	3.5	0.2
TS BYP LINE PRESS IN(PSIG)	22.6	0.3
TS BYP LINE PRESS OUT(PSIG)	8.6	0.3
LOOP THERMOCOUPLES		
TEST SECT INLET WELL(DEG F)	802.9	0.4
TEST SECT OUTLET WELL(DEG F)	806.0	0.4
PUMP IN PIPE WALL TC	778.7	28.7
PUMP OUT PIPE WALL TC	789.9	1.3
RAD IN PIPE WALL TC	803.2	1.0
RAD OUT PIPE WALL TC	793.0	0.5
TEST SECTION HOUSING THERMOCOUPLES		
TS SHELL-BOT(DEG F)	806.1	0.2
TS GUARD HTR-BOT	789.5	0.2
TS HTR-BOT	742.9	1.2
TS SHELL-LOW CTR	804.1	0.4
TS GUARD HTR-LOW CTR	830.0	0.8
TS HTR-LOW CTR	786.3	0.5
TS SHELL-UP CTR	812.1	0.5
TS GUARD HTR-UP CTR	845.6	0.7

Test 2, run 102 (continued)

INSTRUMENT	20-SEC AVG	STD DEV
TS HTR-UP CTR	834.1	0.8
TS SHELL-TOP	807.4	0.7
TS GUARD HTR-TOP	825.7	1.0
TS HTR-TOP	841.2	0.9
REFERENCE BOX THERMOCOUPLES		
150 DEG REF BOX 1	106.2	1.1
150 DEG REF BOX 2	105.6	0.7
150 DEG REF BOX 3	109.0	0.6
150 DEG REF BOX 4	107.0	0.3
150 DEG REF BOX 5	106.6	0.4
MISCELLANEOUS		
SOD PUMP SPEED(RPM)	1255.4	99.8

TEST SERIES 10(BUNDLE 3C); TEST 2 RUN 103 11/17/78 10 47 35

CONDITIONS:

TEST SECTION FLOW: 1.8 L/S (29.1 GPM)
TEST SECTION POWER: 0.0 KW

TEST SECTION INLET TEMPERATURE: 428 DEG C (803 DEG F)
TEST SECTION OUTLET TEMPERATURE: 430 DEG C (806 DEG F)

HEAT BALANCE:

NOT APPLICABLE FOR THIS TEST

INSTRUMENT	20-SEC AVG	STD DEV
FLOWS		
TEST SECTION(TS) FLOW IN(GPM)	29.1	0.4
TS FLOW OUT(GPM)	29.0	0.4
TS BYPASS FLOW(GPM)	1.6	0.3
LOOP FLOW TOTAL(GPM)	28.9	0.9
RADIATOR AIR FLOW(CFM)	1.2	0.0

Test 2, run 103 (continued)

INSTRUMENT	20-SEC AVG	STD DEV
PRESSURES		
TS IN PRESS(PSIG)	24.1	0.3
TS OUT PRESS(PSIG)	5.7	0.2
PUMP OUT PRESS(PSIG)	30.8	0.2
TS LINE PRESS IN(PSIG)	33.4	0.3
EXP TANK ARGON PRESS(PSIG)	3.7	0.2
TS BYP LINE PRESS IN(PSIG)	33.9	0.3
TS BYP LINE PRESS OUT(PSIG)	8.5	0.4
LOOP THERMOCOUPLES		
TEST SECT INLET WELL(DEG F)	803.6	0.3
TEST SECT OUTLET WELL(DEG F)	806.7	0.4
PUMP IN PIPE WALL TC	785.8	23.7
PUMP OUT PIPE WALL TC	791.3	1.2
RAD IN PIPE WALL TC	801.2	1.1
RAD OUT PIPE WALL TC	795.0	0.4
TEST SECTION HOUSING THERMOCOUPLES		
TS SHELL-BOT(DEG F)	806.6	0.4
TS GUARD HTR-BOT	789.8	0.4
TS HTR-BOT	743.1	0.5
TS SHELL-LOW CTR	804.4	0.2
TS GUARD HTR-LOW CTR	830.3	0.6
TS HTR-LOW CTR	786.3	0.5
TS SHELL-UP CTR	812.4	0.5
TS GUARD HTR-UP CTR	846.3	0.7
TS HTR-UP CTR	834.6	0.6
TS SHELL-TOP	808.1	0.7
TS GUARD HTR-TOP	826.1	1.1
TS HTR-TOP	841.6	1.2
REFERENCE BOX THERMOCOUPLES		
150 DEG REF BOX 1	106.3	0.8
150 DEG REF BOX 2	105.4	0.7
150 DEG REF BOX 3	109.0	0.6
150 DEG REF BOX 4	107.0	0.3
150 DEG REF BOX 5	104.4	0.2
MISCELLANEOUS		
SOD PUMP SPEED(RPM)	1661.7	64.6

TEST SERIES 10(BUNDLE 3C); TEST 2 RUN 104 11/17/73 10 40 4

CONDITIONS:
TEST SECTION FLOW: 2.3 L/S (36.3 GPM)
TEST SECTION POWER: 0.0 KW

Test 2, run 104 (continued)

TEST SECTION INLET TEMPERATURE: 428 DEG C (803 DEG F)
TEST SECTION OUTLET TEMPERATURE: 430 DEG C (806 DEG F)

HEAT BALANCE:

NOT APPLICABLE FOR THIS TEST

INSTRUMENT	20-SEC AVG	STD DEV
FLOWS		
TEST SECTION(TS) FLOW IN(GPM)	36.3	0.4
TS FLOW OUT(GPM)	36.4	0.4
TS BYPASS FLOW(GPM)	1.6	0.3
LOOP FLOW TOTAL(GPM)	36.1	1.0
RADIATOR AIR FLOW(CFM)	1.2	0.1
PRESSURES		
TS IN PRESS(PSIG)	33.2	0.3
TS OUT PRESS(PSIG)	5.8	0.3
PUMP OUT PRESS(PSIG)	45.8	0.2
TS LINE PRESS IN(PSIG)	48.3	0.3
EXP TANK ARGON PRESS(PSIG)	4.0	0.2
TS BYP LINE PRESS IN(PSIG)	48.8	0.3
TS BYP LINE PRESS OUT(PSIG)	8.6	0.4
LOOP THERMOCOUPLES		
TEST SECT INLET WELL(DEG F)	803.2	3.2
TEST SECT OUTLET WELL(DEG F)	806.3	3.0
PUMP IN PIPE WALL TC	781.8	28.7
PUMP OUT PIPE WALL TC	793.3	8.2
RAD IN PIPE WALL TC	802.9	11.6
RAD OUT PIPE WALL TC	796.4	1.7
TEST SECTION HOUSING THERMOCOUPLES		
TS SHELL-BOT(DEG F)	806.0	1.6
TS GUARD HTR-BOT	790.4	4.3
TS HTR-BOT	744.7	4.5
TS SHELL-LOW CTR	802.1	8.1
TS GUARD HTR-LOW CTR	831.9	7.9
TS HTR-LOW CTR	787.3	1.8
TS SHELL-UP CTR	812.8	6.0
TS GUARD HTR-UP CTR	847.9	10.5
TS HTR-UP CTR	837.1	13.4
TS SHELL-TOP	808.4	4.8
TS GUARD HTR-TOP	831.2	22.4
TS HTR-TOP	844.4	9.6

Test 2, run 104 (continued)

INSTRUMENT	20-SEC AVG	STD DEV
REFERENCE BOX THERMOCOUPLES		
150 DEG REF BOX 1	106.8	5.2
150 DEG REF BOX 2	106.2	3.4
150 DEG REF BOX 3	108.9	2.4
150 DEG REF BOX 4	107.8	3.4
150 DEG REF BOX 5	102.1	22.6
MISCELLANEOUS		
SOD PUMP SPEED(RPM)	1952.2	45.8

TEST SERIES 10(BUNDLE 3C); TEST 2 RUN 105 11/17/78 10 31 9

CONDITIONS:

TEST SECTION FLOW: 2.8 L/S (43.6 GPM)
TEST SECTION POWER: 0.0 KW

TEST SECTION INLET TEMPERATURE: 427 DEG C (802 DEG F)
TEST SECTION OUTLET TEMPERATURE: 429 DEG C (805 DEG F)

HEAT BALANCE:

NOT APPLICABLE FOR THIS TEST

INSTRUMENT	20-SEC AVG	STD DEV
FLOWS		
TEST SECTION(TS) FLOW IN(GPM)	43.6	0.4
TS FLOW OUT(GPM)	43.6	0.4
TS BYPASS FLOW(GPM)	1.4	0.3
LOOP FLOW TOTAL(GPM)	43.4	0.9
RADIATOR AIR FLOW(CFM)	1.2	0.1
PRESSURES		
TS IN PRESS(PSIG)	44.5	0.3
TS OUT PRESS(PSIG)	6.0	0.2
PUMP OUT PRESS(PSIG)	64.5	0.2
TS LINE PRESS IN(PSIG)	67.2	0.3

Test 2, run 105 (continued)

INSTRUMENT	20-SEC AVG	STD DEV
EXP TANK ARGON PRESS(PSIG)	4.1	0.2
TS BYP LINE PRESS IN(PSIG)	67.5	0.3
TS BYP LINE PRESS OUT(PSIG)	8.9	0.4
LOOP THERMOCOUPLES		
TEST SECT INLET WELL(DEG F)	802.3	6.1
TEST SECT OUTLET WELL(DEG F)	805.9	5.8
PUMP IN PIPE WALL TC	780.8	28.5
PUMP OUT PIPE WALL TC	793.0	7.4
RAD IN PIPE WALL TC	798.6	6.4
RAD OUT PIPE WALL TC	795.8	3.2
TEST SECTION HOUSING THERMOCOUPLES		
TS SHELL-BOT(DEG F)	804.2	4.4
TS GUARD HTR-BOT	793.1	13.3
TS HTR-BOT	746.9	6.6
TS SHELL-LOW CTR	802.4	2.5
TS GUARD HTR-LOW CTR	830.3	3.1
TS HTR-LOW CTR	788.5	2.2
TS SHELL-UP CTR	810.4	1.0
TS GUARD HTR-UP CTR	849.8	16.5
TS HTR-UP CTR	841.5	23.9
TS SHELL-TOP	808.0	6.9
TS GUARD HTR-TOP	826.9	7.6
TS HTR-TOP	844.8	6.5
REFERENCE BOX THERMOCOUPLES		
150 DEG REF BOX 1	107.5	7.3
150 DEG REF BOX 2	106.4	2.4
150 DEG REF BOX 3	109.3	2.4
150 DEG REF BOX 4	108.1	5.9
150 DEG REF BOX 5	103.6	9.2
MISCELLANEOUS		
SOD PUMP SPEED(RPM)	2350.3	31.4

TEST SERIES 10(BUNDLE 3C); TEST 2 RUN 106 11/17/78 10 18 45

CONDITIONS:

TEST SECTION FLOW: 3.2 L/S (50.9 GPM)

TEST SECTION POWER: 0.0 KW

TEST SECTION INLET TEMPERATURE: 426 DEG C (799 DEG F)

TEST SECTION OUTLET TEMPERATURE: 428 DEG C (802 DEG F)

Test 2, run 106 (continued)

HEAT BALANCE:

NOT APPLICABLE FOR THIS TEST

INSTRUMENT	20-SEC AVG	STD DEV
FLOWS		
TEST SECTION(TS) FLOW IN(GPM)	50.9	0.4
TS FLOW OUT(GPM)	50.9	0.4
TS BYPASS FLOW(GPM)	0.9	0.4
LOOP FLOW TOTAL(GPM)	50.7	0.9
RADIATOR AIR FLOW(CFM)	1.2	0.0
PRESSURES		
TS IN PRESS(PSIG)	58.1	0.3
TS OUT PRESS(PSIG)	6.1	0.3
PUMP OUT PRESS(PSIG)	87.3	0.2
TS LINE PRESS IN(PSIG)	90.4	0.3
EXP TANK ARGON PRESS(PSIG)	4.4	0.2
TS BYP LINE PRESS IN(PSIG)	90.5	0.4
TS BYP LINE PRESS OUT(PSIG)	9.1	0.4
LOOP THERMOCOUPLES		
TEST SECT INLET WELL(DEG F)	799.3	0.4
TEST SECT OUTLET WELL(DEG F)	802.9	0.4
PUMP IN PIPE WALL TC	777.8	26.0
PUMP OUT PIPE WALL TC	789.8	1.3
RAD IN PIPE WALL TC	795.6	1.8
RAD OUT PIPE WALL TC	792.0	0.2
TEST SECTION HOUSING THERMOCOUPLES		
TS SHELL-BOT(DEG F)	803.5	0.3
TS GUARD HTR-BOT	792.2	0.4
TS HTR-BOT	748.5	1.6
TS SHELL-LOW CTR	801.2	0.3
TS GUARD HTR-LOW CTR	831.8	0.7
TS HTR-LOW CTR	790.5	0.6
TS SHELL-UP CTR	809.4	0.5
TS GUARD HTR-UP CTR	848.8	0.7
TS HTR-UP CTR	838.9	0.7
TS SHELL-TOP	804.8	0.9
TS GUARD HTR-TOP	827.5	1.2
TS HTR-TOP	845.8	1.3
REFERENCE BOX THERMOCOUPLES		
150 DEG REF BOX 1	106.1	1.1
150 DEG REF BOX 2	105.3	0.9
150 DEG REF BOX 3	109.0	0.6

Test 2, run 106 (continued)

INSTRUMENT	20-SEC AVG	STD DEV
150 DEG REF BOX 4	107.1	0.3
150 DEG REF BOX 5	104.6	0.4
MISCELLANEOUS		
SOD PUMP SPEED(RPM)	2774.7	47.0

TEST SERIES 10(BUNDLE 3C); TEST 2 RUN 107 11/17/78 10 10 6

CONDITIONS:

TEST SECTION FLOW: 3.7 L/S (57.8 GPM)
TEST SECTION POWER: 0.0 KW

TEST SECTION INLET TEMPERATURE: 428 DEG C (803 DEG F)
TEST SECTION OUTLET TEMPERATURE: 430 DEG C (807 DEG F)

HEAT BALANCE:

NOT APPLICABLE FOR THIS TEST

INSTRUMENT	20-SEC AVG	STD DEV
FLOWS		
TEST SECTION(TS) FLOW IN(GPM)	57.8	0.4
TS FLOW OUT(GPM)	57.7	0.4
TS BYPASS FLOW(GPM)	1.0	0.3
LOOP FLOW TOTAL(GPM)	57.7	0.9
RADIATOR AIR FLOW(CFM)	1.2	0.0
PRESSURES		
TS IN PRESS(PSIG)	73.3	0.3
TS OUT PRESS(PSIG)	6.1	0.3
PUMP OUT PRESS(PSIG)	112.0	0.2
TS LINE PRESS IN(PSIG)	116.5	0.4
EXP TANK ARGON PRESS(PSIG)	4.6	0.2
TS BYP LINE PRESS IN(PSIG)	116.5	0.4
TS BYP LINE PRESS OUT(PSIG)	9.3	0.4

Test 2, run 107 (continued)

INSTRUMENT	20-SEC AVG	STD DEV
LOOP THERMOCOUPLES		
TEST SECT INLET WELL(DEG F)	803.7	0.4
TEST SECT OUTLET WELL(DEG F)	807.1	0.4
PUMP IN PIPE WALL TC	781.0	29.7
PUMP OUT PIPE WALL TC	793.7	1.4
RAD IN PIPE WALL TC	798.5	1.3
RAD OUT PIPE WALL TC	796.0	0.3
TEST SECTION HOUSING THERMOCOUPLES		
TS SHELL-BOT(DEG F)	807.0	0.3
TS GUARD HTR-BOT	794.5	0.2
TS HTR-BOT	750.8	0.5
TS SHELL-LOW CTR	804.8	0.4
TS GUARD HTR-LOW CTR	833.3	0.7
TS HTR-LOW CTR	792.1	0.5
TS SHELL-UP CTR	812.9	0.6
TS GUARD HTR-UP CTR	850.7	0.7
TS HTR-UP CTR	840.6	0.8
TS SHELL-TOP	808.9	0.9
TS GUARD HTR-TOP	829.9	1.4
TS HTR-TOP	847.4	1.0
REFERENCE BOX THERMOCOUPLES		
150 DEG REF BOX 1	106.5	1.0
150 DEG REF BOX 2	105.5	0.8
150 DEG REF BOX 3	108.9	0.6
150 DEG REF BOX 4	107.1	0.3
150 DEG REF BOX 5	105.3	0.2
MISCELLANEOUS		
SOD PUMP SPEED(RPM)	3060.1	84.1

TEST SERIES 10(BUNDLE 3C); TEST 2 RUN 108 11/17/78 10 3 23

CONDITIONS:

TEST SECTION FLOW: 4.1 L/S (64.9 GPM)

TEST SECTION POWER: 0.0 KW

TEST SECTION INLET TEMPERATURE: 428 DEG C (804 DEG F)

TEST SECTION OUTLET TEMPERATURE: 430 DEG C (807 DEG F)

HEAT BALANCE:

NOT APPLICABLE FOR THIS TEST

Test 2, run 108 (continued)

INSTRUMENT	20-SEC AVG	STD DEV
FLOWS		
TEST SECTION(TS) FLOW IN(GPM)	64.9	0.4
TS FLOW OUT(GPM)	64.7	0.4
TS BYPASS FLOW(GPM)	0.9	0.3
LOOP FLOW TOTAL(GPM)	65.0	0.9
RADIATOR AIR FLOW(CFM)	1.2	0.0
PRESSURES		
TS IN PRESS(PSIG)	91.8	0.3
TS OUT PRESS(PSIG)	6.3	0.3
PUMP OUT PRESS(PSIG)	128.0	0.2
TS LINE PRESS IN(PSIG)	148.1	0.4
EXP TANK ARGON PRESS(PSIG)	4.9	0.2
TS BYP LINE PRESS IN(PSIG)	148.0	0.4
TS BYP LINE PRESS OUT(PSIG)	9.5	0.4
LOOP THERMOCOUPLES		
TEST SECT INLET WELL(DEG F)	804.0	0.4
TEST SECT OUTLET WELL(DEG F)	807.5	0.4
PUMP IN PIPE WALL TC	779.7	29.9
PUMP OUT PIPE WALL TC	794.3	0.9
RAD IN PIPE WALL TC	797.6	1.7
RAD OUT PIPE WALL TC	796.0	0.2
TEST SECTION HOUSING THERMOCOUPLES		
TS SHELL-BOT(DEG F)	806.5	0.4
TS GUARD HTR-BOT	795.2	0.3
TS HTR-BOT	752.3	0.5
TS SHELL-LOW CTR	804.4	0.2
TS GUARD HTR-LOW CTR	832.9	0.6
TS HTR-LOW CTR	792.9	0.4
TS SHELL-UP CTR	812.6	0.5
TS GUARD HTR-UP CTR	851.0	0.5
TS HTR-UP CTR	841.8	0.6
TS SHELL-TOP	808.7	0.5
TS GUARD HTR-TOP	829.3	0.8
TS HTR-TOP	848.6	0.6
REFERENCE BOX THERMOCOUPLES		
150 DEG REF BOX 1	106.2	0.6
150 DEG REF BOX 2	106.1	0.4
150 DEG REF BOX 3	108.8	0.4
150 DEG REF BOX 4	107.0	0.2
150 DEG REF BOX 5	105.4	0.3
MISCELLANEOUS		
SOD PUMP SPEED(RPM)	3203.3	35.4

TEST SERIES 10(BUNDLE 3C); TEST 2 RUN 109 11/17/78 9 50 57

CONDITIONS:

TEST SECTION FLOW: 4.5 L/S (71.6 GPM)
TEST SECTION POWER: 0.0 KW

TEST SECTION INLET TEMPERATURE: 428 DEG C (803 DEG F)
TEST SECTION OUTLET TEMPERATURE: 430 DEG C (807 DEG F)

HEAT BALANCE:

NOT APPLICABLE FOR THIS TEST

INSTRUMENT	20-SEC AVG	STD DEV
FLOWS		
TEST SECTION(TS) FLOW IN(GPM)	71.6	0.3
TS FLOW OUT(GPM)	71.3	0.4
TS BYPASS FLOW(GPM)	0.8	0.3
LOOP FLOW TOTAL(GPM)	71.8	0.9
RADIATOR AIR FLOW(CFM)	1.2	0.1
PRESSURES		
TS IN PRESS(PSIG)	111.6	0.4
TS OUT PRESS(PSIG)	6.6	0.3
PUMP OUT PRESS(PSIG)	128.4	0.2
TS LINE PRESS IN(PSIG)	179.2	0.3
EXP TANK ARGON PRESS(PSIG)	5.1	0.2
TS BYP LINE PRESS IN(PSIG)	177.7	0.3
TS BYP LINE PRESS OUT(PSIG)	9.8	0.4
LOOP THERMOCOUPLES		
TEST SECT INLET WELL(DEG F)	803.6	4.2
TEST SECT OUTLET WELL(DEG F)	807.4	3.1
PUMP IN PIPE WALL TC	781.8	23.3
PUMP OUT PIPE WALL TC	792.6	5.3
RAD IN PIPE WALL TC	797.5	4.2
RAD OUT PIPE WALL TC	792.0	0.7
TEST SECTION HOUSING THERMOCOUPLES		
TS SHELL-BOT(DEG F)	807.6	1.9
TS GUARD HTR-BOT	802.1	6.1
TS HTR-BOT	757.4	2.4
TS SHELL-LOW CTR	805.7	0.4
TS GUARD HTR-LOW CTR	839.3	3.1
TS HTR-LOW CTR	796.9	2.4
TS SHELL-UP CTR	814.3	0.6
TS GUARD HTR-UP CTR	855.9	7.9

Test 2, run 109 (continued)

INSTRUMENT	20-SEC AVG	STD DEV
TS HTR-UP CTR	845.6	8.1
TS SHELL-TOP	808.8	4.8
TS GUARD HTR-TOP	834.3	1.0
TS HTR-TOP	851.4	4.4
REFERENCE BOX THERMOCOUPLES		
150 DEG REF BOX 1	106.5	3.3
150 DEG REF BOX 2	105.4	1.3
150 DEG REF BOX 3	108.7	0.4
150 DEG REF BOX 4	107.2	1.6
150 DEG REF BOX 5	104.8	5.4
MISCELLANEOUS		
SOD PUMP SPEED(RPM)	3595.4	49.5

TEST SERIES 10(BUNDLE 3C); TEST 10 RUN 101 01/17/78 11 19 37

CONDITIONS:
TEST SECTION FLOW: 0.91 L/S (14.4 GPM)
TEST SECTION POWER
(1 ROD HEATED): 15.0 KW (28.1 KW/M/ROD)(8.6 KW/FT/ROD)

TEST SECTION INLET TEMPERATURE: 454 DEG C (849 DEG F)
TEST SECTION OUTLET TEMPERATURE: 469 DEG C (877 DEG F)

HEAT BALANCE:

HEAT INPUT FROM 31 FUEL PIN SIMULATORS: 15.0 KW
HEAT ABSORBED BY SODIUM=
FLOW X SP.HEAT X (TS OUT TEMP - TS IN TEMP) 15.1 KW
% OF INPUT HEAT ACCOUNTED FOR: 100.8 %

INSTRUMENT	20-SEC AVG	STD DEV
HEATER POWERS(KW)		
HTR POWER IN ROD 1	15.0	0.0
HTR POWER IN RODS 8,9,10	0.1	0.0
HTR POWER IN RODS 14,15,16	0.0	0.0
HTR POWER IN RODS 2,3,11,19	0.0	0.0
HTR POWER IN RODS 5,6,13,17	0.1	0.0
HTR POWER IN RODS 4,7,12,18	-0.0	0.0
HTR POWER IN RODS 30,31	-0.0	0.0
HTR POWER IN RODS 24,25,27,28	-0.3	0.0
HTR POWER IN RODS 33,34	-0.0	0.0
HTR POWER IN RODS 21,22,36,37	0.0	0.0
FLOWS		
TEST SECTION(TS) FLOW IN(GPM)	14.4	0.1
TS FLOW OUT(GPM)	14.4	0.1
TS BYPASS FLOW(GPM)	1.9	0.1
LOOP FLOW TOTAL(GPM)	14.5	0.1
RADIATOR AIR FLOW(CFM)	1.2	0.0
PRESSURES		
TS IN PRESS(PSIG)	15.0	0.1
TS OUT PRESS(PSIG)	6.0	0.0
PUMP OUT PRESS(PSIG)	10.3	0.0
TS LINE PRESS IN(PSIG)	14.0	0.1
EXP TANK ARGON PRESS(PSIG)	2.4	0.1
TS BYP LINE PRESS IN(PSIG)	15.3	0.1
TS BYP LINE PRESS OUT(PSIG)	9.5	0.1

Test 10, run 101 (continued)

INSTRUMENT	20-SEC AVG	STD DEV	NORMALIZED TEMP
LOOP THERMOCOUPLES			
TEST SECT INLET WELL(DEG F)	849.2	0.4	
TEST SECT OUTLET WELL(DEG F)	877.0	0.4	
PUMP IN PIPE WALL TC	863.3	4.1	
PUMP OUT PIPE WALL TC	841.4	1.1	
RAD IN PIPE WALL TC	868.2	0.9	
RAD OUT PIPE WALL TC	845.1	0.5	
HEATER INTERNAL THERMOCOUPLES			
HTR TC IN HTR 08,12AB IN(DEG F)	866.1	0.5	0.61
HTR TC IN HTR 13,12AB IN	852.1	0.4	0.11
HTR TC IN HTR 18,12AB IN	849.2	0.3	0.00
HTR TC IN HTR 22,12AB IN	842.8	7.4	-.23
HTR TC IN HTR 08,12BC IN	866.2	0.5	0.61
HTR TC IN HTR 13,12BC IN	851.1	0.5	0.07
HTR TC IN HTR 18,12BC IN	848.9	0.5	-.01
HTR TC IN HTR 22,12BC IN	851.8	1.1	0.10
HTR TC IN HTR 09,15AB IN	908.7	8.2	2.14
HTR TC IN HTR 10,15BC IN	866.0	0.5	0.61
HTR TC IN HTR 16,15BC IN	851.4	0.7	0.08
HTR TC IN HTR 25,15BC IN	847.9	0.8	-.04
HTR TC IN HTR 02,15.1 IN	982.8	0.8	4.80
HTR TC IN HTR 03,15.1 IN	1000.1	1.6	5.42
HTR TC IN HTR 06,15.1 IN	1030.8	1.6	6.52
HTR TC IN HTR 15,15.1 IN	906.5	1.0	2.06
HTR TC IN HTR 24,15.1 IN	852.8	0.4	0.13
HTR TC IN HTR 33,15.1 IN	853.9	0.4	0.17
HTR TC IN HTR 36,15.1 IN	850.6	0.7	0.05
HTR TC IN HTR 02,15.4 IN	1040.8	1.8	6.88
HTR TC IN HTR 03,15.4 IN	1034.5	1.4	6.66
HTR TC IN HTR 06,15.4 IN	1043.4	2.0	6.97
HTR TC IN HTR 15,15.4 IN	960.4	0.8	3.99
HTR TC IN HTR 24,15.4 IN	852.6	0.3	0.12
HTR TC IN HTR 33,15.4 IN	854.6	0.4	0.19
HTR TC IN HTR 34,15.4 IN	880.6	62.1	1.13
HTR TC IN HTR 36,15.4 IN	848.8	0.6	-.01
HTR TC IN HTR 02,15.6 IN	1039.3	0.9	6.83
HTR TC IN HTR 03,15.6 IN	1026.7	1.1	6.38
HTR TC IN HTR 06,15.6 IN	1088.9	2.1	8.61
HTR TC IN HTR 15,15.6 IN	962.0	0.9	4.05
HTR TC IN HTR 24,15.6 IN	850.9	0.6	0.06
HTR TC IN HTR 33,15.6 IN	853.4	0.7	0.15
HTR TC IN HTR 34,15.6 IN	842.7	6.0	-.23
HTR TC IN HTR 36,15.6 IN	848.1	0.4	-.04
HTR TC IN HTR 03,15.9 IN	990.0	0.7	5.06
HTR TC IN HTR 06,15.9 IN	1077.9	1.7	8.21
HTR TC IN HTR 15,15.9 IN	911.2	0.6	2.23

Test 10, run 101 (continued)

INSTRUMENT	20-SEC AVG	STD DEV	NORMALIZED TEMP
HTR TC IN HTR 24,15.9 IN	850.6	0.5	0.05
HTR TC IN HTR 33,15.9 IN	850.8	0.1	0.06
HTR TC IN HTR 34,15.9 IN	853.0	0.8	0.14
HTR TC IN HTR 36,15.9 IN	845.8	1.7	-.12
HTR TC IN HTR 04,16.1 IN	970.5	1.0	4.36
HTR TC IN HTR 05,16.1 IN	964.4	1.1	4.14
HTR TC IN HTR 07,16.1 IN	975.8	0.9	4.55
HTR TC IN HTR 21,16.1 IN	849.2	0.3	0.00
HTR TC IN HTR 27,16.1 IN	851.5	1.1	0.08
HTR TC IN HTR 04,16.4 IN	971.1	1.5	4.38
HTR TC IN HTR 05,16.4 IN	973.9	2.4	4.48
HTR TC IN HTR 07,16.4 IN	979.1	1.4	4.67
HTR TC IN HTR 21,16.4 IN	852.3	0.3	0.11
HTR TC IN HTR 27,16.4 IN	851.0	0.9	0.07
HTR TC IN HTR 04,16.6 IN	963.5	1.2	4.10
HTR TC IN HTR 05,16.6 IN	986.8	0.9	4.94
HTR TC IN HTR 07,16.6 IN	989.6	1.2	5.04
HTR TC IN HTR 21,16.6 IN	850.7	0.4	0.06
HTR TC IN HTR 27,16.6 IN	851.1	0.7	0.07
HTR TC IN HTR 04,16.9 IN	964.7	1.5	4.15
HTR TC IN HTR 07,16.9 IN	997.0	1.4	5.31
HTR TC IN HTR 21,16.9 IN	849.2	0.9	0.00
HTR TC IN HTR 27,16.9 IN	851.6	0.7	0.09
HTR TC IN HTR 11,18AB IN	916.2	0.6	2.41
HTR TC IN HTR 12,18AB IN	869.3	0.6	0.72
HTR TC IN HTR 14,18AB IN	863.9	9.7	0.53
HTR TC IN HTR 30,18AB IN	845.8	7.1	-.12
HTR TC IN HTR 11,18BC IN	917.0	0.5	2.44
HTR TC IN HTR 12,18BC IN	865.3	0.5	0.58
HTR TC IN HTR 14,18BC IN	963.2	13.9	4.10
HTR TC IN HTR 17,18BC IN	903.4	0.4	1.95
HTR TC IN HTR 30,18BC IN	846.8	7.3	-.09
WIRE WRAP THERMOCOUPLES			
WW TC ON HTR 12,-1 IN(DEG F)	852.8	3.1	0.13
WW TC ON HTR 16,-1 IN	849.1	0.9	-.00
WW TC ON HTR 12,01 IN	851.8	14.2	0.09
WW TC ON HTR 16,09 IN	855.7	0.8	0.24
WW TC ON HTR 04,11 IN	928.2	0.5	2.84
WW TC ON HTR 05,11 IN	973.8	0.3	4.47
WW TC ON HTR 13,11 IN	873.5	0.9	0.87
WW TC ON HTR 17,11 IN	853.2	0.3	0.14
WW TC ON HTR 28,11 IN	855.2	0.6	0.21
WW TC ON HTR 31,11 IN	851.5	0.7	0.08
WW TC ON HTR 03,13 IN	952.1	1.9	3.70
WW TC ON HTR 13,13 IN	859.7	0.8	0.38
WW TC ON HTR 15,13 IN	854.1	0.3	0.18
WW TC ON HTR 17,13 IN	852.8	0.4	0.13
WW TC ON HTR 22,13 IN	853.5	0.4	0.16

Test 10, run 101 (continued)

INSTRUMENT	20-SEC AVG	STD DEV	NORMALIZED TEMP
WW TC ON HTR 01,15 IN	1053.1	0.5	7.32
WW TC ON HTR 03,15 IN	1011.3	1.6	5.82
WW TC ON HTR 08,15 IN	861.6	1.3	0.45
WW TC ON HTR 10,15 IN	870.9	0.4	0.78
WW TC ON HTR 15,15 IN	856.3	0.4	0.26
WW TC ON HTR 19,15 IN	891.2	0.4	1.51
WW TC ON HTR 25,15 IN	853.3	0.4	0.15
WW TC ON HTR 36,15 IN	852.0	0.9	0.10
WW TC ON HTR 01,17 IN	992.4	1.2	5.14
WW TC AJ HTR 02,17 IN	921.6	1.6	2.60
WW TC OP HTR 02,17 IN	965.8	1.4	4.19
WW TC ON HTR 08,17 IN	865.8	0.4	0.60
WW TC ON HTR 10,17 IN	866.1	0.4	0.61
WW TC ON HTR 11,17 IN	866.6	0.5	0.63
WW TC ON HTR 18,17 IN	875.4	0.4	0.94
WW TC ON HTR 19,17 IN	883.9	0.5	1.25
WW TC ON HTR 21,17 IN	857.4	0.3	0.30
WW TC ON HTR 22,17 IN	860.6	0.4	0.41
WW TC ON HTR 33,17 IN	851.2	0.8	0.07
WW TC ON HTR 37,17 IN	852.4	1.2	0.12
WW TC ON HTR 06,19 IN	971.7	0.7	4.40
WW TC AJ HTR 07,19 IN	950.8	1.4	3.65
WW TC OP HTR 07,19 IN	987.9	1.0	4.98
WW TC ON HTR 09,19 IN	878.5	0.9	1.05
WW TC ON HTR 14,19 IN	860.0	1.4	0.39
WW TC ON HTR 18,19 IN	874.3	0.5	0.90
WW TC ON HTR 27,19 IN	854.7	0.4	0.20
WW TC ON HTR 30,19 IN	852.5	0.3	0.12
WW TC ON HTR 34,19 IN	852.8	1.0	0.13
WW TC ON HTR 36,19 IN	854.9	0.9	0.21
WW TC ON HTR 37,19 IN	851.5	0.8	0.08
WW TC ON HTR 05,21 IN	950.8	0.3	3.65
WW TC ON HTR 06,21 IN	1007.0	0.5	5.67
WW TC ON HTR 21,21 IN	856.0	0.4	0.25
WW TC ON HTR 24,21 IN	855.8	0.3	0.24
WW TC ON HTR 25,21 IN	856.1	0.5	0.25
WW TC ON HTR 27,21 IN	856.7	0.5	0.27
WW TC ON HTR 30,21 IN	858.2	0.3	0.32
WW TC ON HTR 33,21 IN	854.3	1.2	0.18
WW TC ON HTR 34,21 IN	850.1	1.3	0.03
WW TC ON HTR 04,23 IN	959.1	0.5	3.95
WW TC ON HTR 09,23 IN	866.8	0.5	0.63
WW TC ON HTR 14,23 IN	873.7	0.6	0.88
WW TC ON HTR 24,23 IN	859.1	0.4	0.35
WW TC ON HTR 28,23 IN	858.7	0.5	0.34
WW TC ON HTR 31,23 IN	858.6	0.5	0.34
WW TC ON ROD 01,25 IN	965.4	0.3	4.17
WW TC ON ROD 02,25 IN	904.0	0.5	1.97
WW TC ON ROD 05,25 IN	898.1	0.3	1.76
WW TC ON ROD 08,25 IN	855.8	0.1	0.24
WW TC ON ROD 14,25 IN	860.8	0.2	0.42
WW TC ON ROD 04,27 IN	878.8	0.3	1.06

Test 10, run 101 (continued)

INSTRUMENT	20-SEC AVG	STD DEV	NORMALIZED TEMP
WW TC ON ROD 07,27 IN	931.2	1.2	2.95
WW TC ON ROD 12,27 IN	860.6	1.2	0.41
WW TC ON ROD 16,27 IN	857.7	0.4	0.30
WW TC ON ROD 18,27 IN	864.1	0.2	0.53
WW TC ON ROD 03,29 IN	898.7	0.5	1.78
WW TC ON ROD 06,29 IN	913.6	0.2	2.31
WW TC ON ROD 10,29 IN	865.0	1.1	0.57
WW TC ON ROD 01,37 IN	919.1	0.4	2.51
WW TC ON ROD 02,37 IN	884.8	0.3	1.28
WW TC ON ROD 08,37 IN	859.4	0.4	0.37
WW TC ON ROD 14,37 IN	874.0	0.2	0.89
WW TC ON ROD 04,51 IN	887.5	0.4	1.38
WW TC ON ROD 07,51 IN	892.6	0.5	1.56
WW TC ON ROD 12,51 IN	870.1	0.4	0.75
WW TC ON ROD 16,51 IN	872.1	0.4	0.82
WW TC ON ROD 18,51 IN	868.6	0.4	0.70
WW TC ON ROD 03,63 IN	889.6	0.2	1.45
WW TC ON ROD 06,63 IN	882.2	0.1	1.19
WW TC ON ROD 10,63 IN	879.0	0.3	1.07
DUCT THERMOCOUPLES			
DUCT WALL TC,CH 38,19 IN(DEG F)	849.8	0.8	0.02
DUCT WALL TC,CH 53,19 IN	848.7	0.4	-.02
DUCT WALL TC,CH 28,21 IN	849.6	0.4	0.02
DUCT WALL TC,CH 43,21 IN	850.7	0.9	0.05
DUCT WALL TC,CH 44,21 IN	850.8	0.4	0.06
TEST SECTION HOUSING THERMOCOUPLES			
TS SHELL-BOT(DEG F)	850.5	0.4	
TS GUARD HTR-BOT	814.3	0.3	
TS HTR-BOT	759.1	0.6	
TS SHELL-LOW CTR	851.7	0.3	
TS GUARD HTR-LOW CTR	853.6	0.8	
TS HTR-LOW CTR	778.1	0.6	
TS SHELL-UP CTR	873.0	0.4	
TS GUARD HTR-UP CTR	879.7	0.8	
TS HTR-UP CTR	851.7	1.0	
TS SHELL-TOP	877.6	0.8	
TS GUARD HTR-TOP	877.7	1.6	
TS HTR-TOP	869.1	0.9	
REFERENCE BOX THERMOCOUPLES			
150 DEG REF BOX 1(DEG F)	148.1	1.3	
150 DEG REF BOX 2	149.0	0.7	
150 DEG REF BOX 3	151.5	0.7	
150 DEG REF BOX 4	149.3	0.4	
150 DEG REF BOX 5	147.0	0.2	
MISCELLANEOUS			
SOD PUMP SPEED(RPM)	680.8	4.1	
EXPANSION TANK LEVEL(% FULL)	74.7	0.1	

TEST SERIES 10(BUNDLE 3C); TEST 10 RUN 102 01/17/78 11 44 53

CONDITIONS:

TEST SECTION FLOW: 0.91 L/S (14.3 GPM)

TEST SECTION POWER
(1 ROD HEATED): 14.9 KW (27.9 KW/M/ROD)(8.5 KW/FT/ROD)

TEST SECTION INLET TEMPERATURE: 455 DEG C (852 DEG F)

TEST SECTION OUTLET TEMPERATURE: 470 DEG C (879 DEG F)

HEAT BALANCE:

HEAT INPUT FROM 31 FUEL PIN SIMULATORS: 14.9 KW

HEAT ABSORBED BY SODIUM=
FLOW X SP.HEAT X (TS OUT TEMP - TS IN TEMP) 14.8 KW

% OF INPUT HEAT ACCOUNTED FOR: 99.1 %

INSTRUMENT	20-SEC AVG	STD DEV
HEATER POWERS(KW)		
HTR POWER IN ROD 2	14.9	0.0
HTR POWER IN RODS 8,9,10	0.1	0.0
HTR POWER IN RODS 14,15,16	0.0	0.0
HTR POWER IN RODS 1,3,11,19	0.0	0.0
HTR POWER IN RODS 5,6,13,17	0.1	0.0
HTR POWER IN RODS 4,7,12,18	-0.0	0.0
HTR POWER IN RODS 30,31	0.0	0.0
HTR POWER IN RODS 24,25,27,28	-0.4	0.0
HTR POWER IN RODS 33,34	-0.0	0.0
HTR POWER IN RODS 21,22,36,37	0.0	0.0
FLOWS		
TEST SECTION(TS) FLOW IN(GPM)	14.3	0.1
TS FLOW OUT(GPM)	14.4	0.1
TS BYPASS FLOW(GPM)	1.7	0.1
LOOP FLOW TOTAL(GPM)	14.4	0.1
RADIATOR AIR FLOW(CFM)	1.1	0.0
PRESSURES		
TS IN PRESS(PSIG)	14.9	0.1
TS OUT PRESS(PSIG)	6.0	0.1
PUMP OUT PRESS(PSIG)	10.3	0.0
TS LINE PRESS IN(PSIG)	13.9	0.1
EXP TANK ARGON PRESS(PSIG)	2.4	0.1
TS BYP LINE PRESS IN(PSIG)	15.2	0.1
TS BYP LINE PRESS OUT(PSIG)	9.4	0.1

Test 10, run 102 (continued)

INSTRUMENT	20-SEC AVG	STD DEV	NORMALIZED TEMP
LOOP THERMOCOUPLES			
TEST SECT INLET WELL(DEG F)	852.0	0.5	
TEST SECT OUTLET WELL(DEG F)	879.4	0.5	
PUMP IN PIPE WALL TC	866.2	4.1	
PUMP OUT PIPE WALL TC	844.4	1.1	
RAD IN PIPE WALL TC	871.4	0.8	
RAD OUT PIPE WALL TC	848.4	0.4	
HEATER INTERNAL THERMOCOUPLES			
HTR TC IN HTR 08.12AB IN(DEG F)	952.3	0.3	3.66
HTR TC IN HTR 13.12AB IN	851.6	0.4	-.01
HTR TC IN HTR 18.12AB IN	857.8	0.4	0.21
HTR TC IN HTR 22.12AB IN	850.4	1.9	-.06
HTR TC IN HTR 08.12BC IN	950.8	0.3	3.60
HTR TC IN HTR 13.12BC IN	850.7	0.3	-.05
HTR TC IN HTR 18.12BC IN	857.6	0.4	0.20
HTR TC IN HTR 22.12BC IN	867.0	0.9	0.55
HTR TC IN HTR 09.15AB IN	989.0	6.1	5.00
HTR TC IN HTR 10.15BC IN	892.2	0.4	1.47
HTR TC IN HTR 16.15BC IN	850.2	0.4	-.07
HTR TC IN HTR 25.15BC IN	848.8	0.9	-.12
HTR TC IN HTR 02.15.1 IN	1100.4	0.7	9.07
HTR TC IN HTR 03.15.1 IN	970.7	1.1	4.33
HTR TC IN HTR 06.15.1 IN	914.7	1.6	2.29
HTR TC IN HTR 15.15.1 IN	858.7	0.5	0.24
HTR TC IN HTR 24.15.1 IN	854.1	0.1	0.08
HTR TC IN HTR 33.15.1 IN	853.4	0.3	0.05
HTR TC IN HTR 36.15.1 IN	869.9	0.3	0.65
HTR TC IN HTR 02.15.4 IN	1104.5	0.9	9.22
HTR TC IN HTR 03.15.4 IN	932.6	1.1	2.94
HTR TC IN HTR 06.15.4 IN	916.9	1.7	2.37
HTR TC IN HTR 15.15.4 IN	865.9	0.5	0.51
HTR TC IN HTR 24.15.4 IN	854.1	0.2	0.08
HTR TC IN HTR 33.15.4 IN	854.1	0.1	0.08
HTR TC IN HTR 34.15.4 IN	969.4	11.3	4.28
HTR TC IN HTR 36.15.4 IN	866.7	0.4	0.54
HTR TC IN HTR 02.15.6 IN	1108.0	0.8	9.35
HTR TC IN HTR 03.15.6 IN	929.5	1.0	2.83
HTR TC IN HTR 06.15.6 IN	918.6	0.8	2.43
HTR TC IN HTR 15.15.6 IN	866.4	0.3	0.52
HTR TC IN HTR 24.15.6 IN	852.5	0.3	0.02
HTR TC IN HTR 33.15.6 IN	853.5	0.4	0.05
HTR TC IN HTR 34.15.6 IN	839.7	1.6	-.45
HTR TC IN HTR 36.15.6 IN	867.2	0.3	0.55
HTR TC IN HTR 03.15.9 IN	909.5	0.4	2.10
HTR TC IN HTR 06.15.9 IN	913.6	0.8	2.25
HTR TC IN HTR 15.15.9 IN	857.6	0.4	0.20
HTR TC IN HTR 24.15.9 IN	852.5	0.2	0.02
HTR TC IN HTR 33.15.9 IN	850.8	0.2	-.05

Test 10, run 102 (continued)

INSTRUMENT	20-SEC AVG	STD DEV	NORMALIZED TEMP
HTR TC IN HTR 34,15.9 IN	862.2	0.3	0.37
HTR TC IN HTR 36,15.9 IN	862.8	0.9	0.39
HTR TC IN HTR 04,16.1 IN	896.3	1.5	1.62
HTR TC IN HTR 05,16.1 IN	875.8	0.5	0.87
HTR TC IN HTR 07,16.1 IN	966.0	1.3	4.16
HTR TC IN HTR 21,16.1 IN	859.6	0.4	0.28
HTR TC IN HTR 27,16.1 IN	851.1	1.1	-.03
HTR TC IN HTR 04,16.4 IN	895.5	1.7	1.59
HTR TC IN HTR 05,16.4 IN	878.8	0.7	0.98
HTR TC IN HTR 07,16.4 IN	965.4	1.5	4.14
HTR TC IN HTR 21,16.4 IN	864.6	0.4	0.46
HTR TC IN HTR 27,16.4 IN	850.9	0.8	-.04
HTR TC IN HTR 04,16.6 IN	882.5	0.7	1.11
HTR TC IN HTR 05,16.6 IN	881.1	0.6	1.06
HTR TC IN HTR 07,16.6 IN	982.6	1.0	4.77
HTR TC IN HTR 21,16.6 IN	869.4	0.4	0.63
HTR TC IN HTR 27,16.6 IN	850.8	0.9	-.04
HTR TC IN HTR 04,16.9 IN	878.7	0.7	0.97
HTR TC IN HTR 07,16.9 IN	981.0	1.1	4.71
HTR TC IN HTR 21,16.9 IN	867.4	0.7	0.56
HTR TC IN HTR 27,16.9 IN	851.6	0.2	-.02
HTR TC IN HTR 11,18AB IN	886.9	0.5	1.27
HTR TC IN HTR 12,18AB IN	857.0	0.5	0.18
HTR TC IN HTR 14,18AB IN	863.4	9.8	0.42
HTR TC IN HTR 30,18AB IN	844.3	7.3	-.28
HTR TC IN HTR 11,18BC IN	885.1	0.4	1.21
HTR TC IN HTR 12,18BC IN	852.6	0.4	0.02
HTR TC IN HTR 14,18BC IN	981.1	15.9	4.71
HTR TC IN HTR 17,18BC IN	879.0	0.2	0.98
HTR TC IN HTR 30,18BC IN	842.9	7.1	-.33
WIRE WRAP THERMOCOUPLES			
WW TC ON HTR 12,-1 IN(DEG F)	854.9	3.4	0.10
WW TC ON HTR 16,-1 IN	852.6	0.4	0.02
WW TC ON HTR 12,01 IN	854.1	9.3	0.08
WW TC ON HTR 16,09 IN	855.7	0.4	0.13
WW TC ON HTR 04,11 IN	876.0	0.5	0.88
WW TC ON HTR 05,11 IN	864.9	0.2	0.47
WW TC ON HTR 13,11 IN	856.6	0.4	0.17
WW TC ON HTR 17,11 IN	857.8	0.4	0.21
WW TC ON HTR 28,11 IN	855.8	0.2	0.14
WW TC ON HTR 31,11 IN	852.8	0.4	0.03
WW TC ON HTR 03,13 IN	934.5	0.8	3.01
WW TC ON HTR 13,13 IN	854.0	0.3	0.07
WW TC ON HTR 15,13 IN	853.5	0.4	0.05
WW TC ON HTR 17,13 IN	856.1	0.5	0.15
WW TC ON HTR 22,13 IN	863.2	0.3	0.41
WW TC ON HTR 01,15 IN	891.6	0.5	1.44
WW TC ON HTR 03,15 IN	914.0	0.5	2.26
WW TC ON HTR 08,15 IN	937.0	1.2	3.10
WW TC ON HTR 10,15 IN	876.8	0.4	0.91

Test 10, run 102 (continued)

INSTRUMENT	20-SEC AVG	STD DEV	NORMALIZED TEMP
WW TC ON HTR 15.15 IN	854.3	0.4	0.08
WW TC ON HTR 19.15 IN	951.8	0.5	3.64
WW TC ON HTR 25.15 IN	855.1	0.3	0.11
WW TC ON HTR 36.15 IN	861.0	0.7	0.33
WW TC ON HTR 01.17 IN	885.8	1.2	1.23
WW TC AJ HTR 02.17 IN	1032.2	0.5	6.58
WW TC OP HTR 02.17 IN	1026.3	1.2	6.36
WW TC ON HTR 08.17 IN	949.7	0.5	3.57
WW TC ON HTR 10.17 IN	868.3	0.3	0.59
WW TC ON HTR 11.17 IN	859.8	0.4	0.28
WW TC ON HTR 18.17 IN	894.7	0.3	1.56
WW TC ON HTR 19.17 IN	963.8	0.5	4.08
WW TC ON HTR 21.17 IN	875.3	0.4	0.85
WW TC ON HTR 22.17 IN	876.3	0.4	0.89
WW TC ON HTR 33.17 IN	853.8	0.5	0.06
WW TC ON HTR 37.17 IN	869.8	1.3	0.65
WW TC ON HTR 06.19 IN	893.6	0.6	1.52
WW TC AJ HTR 07.19 IN	1006.4	0.8	5.64
WW TC OP HTR 07.19 IN	985.5	0.7	4.87
WW TC ON HTR 09.19 IN	928.5	0.3	2.79
WW TC ON HTR 14.19 IN	855.1	0.4	0.11
WW TC ON HTR 18.19 IN	902.0	0.3	1.82
WW TC ON HTR 27.19 IN	856.7	0.3	0.17
WW TC ON HTR 30.19 IN	852.4	0.3	0.01
WW TC ON HTR 34.19 IN	859.1	1.1	0.26
WW TC ON HTR 36.19 IN	874.4	0.7	0.82
WW TC ON HTR 37.19 IN	861.4	0.8	0.34
WW TC ON HTR 05.21 IN	877.7	0.4	0.94
WW TC ON HTR 06.21 IN	904.4	0.5	1.91
WW TC ON HTR 21.21 IN	866.2	0.5	0.52
WW TC ON HTR 24.21 IN	858.2	0.2	0.23
WW TC ON HTR 25.21 IN	857.2	0.4	0.19
WW TC ON HTR 27.21 IN	857.2	0.4	0.19
WW TC ON HTR 30.21 IN	853.5	0.4	0.05
WW TC ON HTR 33.21 IN	856.8	1.2	0.17
WW TC ON HTR 34.21 IN	858.8	0.9	0.25
WW TC ON HTR 04.23 IN	902.1	0.4	1.83
WW TC ON HTR 09.23 IN	914.2	0.4	2.27
WW TC ON HTR 14.23 IN	859.5	0.5	0.27
WW TC ON HTR 24.23 IN	862.4	0.2	0.38
WW TC ON HTR 28.23 IN	854.9	0.3	0.10
WW TC ON HTR 31.23 IN	858.1	0.3	0.22
WW TC ON ROD 01.25 IN	907.5	0.6	2.03
WW TC ON ROD 02.25 IN	945.1	0.5	3.40
WW TC ON ROD 05.25 IN	867.8	0.4	0.58
WW TC ON ROD 08.25 IN	875.4	0.4	0.85
WW TC ON ROD 14.25 IN	857.4	0.1	0.20
WW TC ON ROD 04.27 IN	861.3	0.4	0.34
WW TC ON ROD 07.27 IN	898.9	1.8	1.71
WW TC ON ROD 12.27 IN	858.0	0.7	0.22
WW TC ON ROD 16.27 IN	859.0	0.3	0.25

Test 10, run 102 (continued)

INSTRUMENT	20-SEC AVG	STD DEV	NORMALIZED TEMP
WW TC ON ROD 18,27 IN	868.2	0.2	0.59
WW TC ON ROD 03,29 IN	881.9	0.4	1.09
WW TC ON ROD 06,29 IN	878.8	0.3	0.98
WW TC ON ROD 10,29 IN	866.7	1.4	0.54
WW TC ON ROD 01,37 IN	912.2	0.4	2.20
WW TC ON ROD 02,37 IN	915.3	0.1	2.31
WW TC ON ROD 08,37 IN	883.0	0.1	1.13
WW TC ON ROD 14,37 IN	863.2	0.2	0.41
WW TC ON ROD 04,51 IN	875.5	0.2	0.86
WW TC ON ROD 07,51 IN	895.6	0.5	1.59
WW TC ON ROD 12,51 IN	865.0	0.3	0.47
WW TC ON ROD 16,51 IN	869.9	0.2	0.65
WW TC ON ROD 18,51 IN	879.8	0.1	1.01
WW TC ON ROD 03,63 IN	887.5	1.4	1.29
WW TC ON ROD 06,63 IN	877.3	0.0	0.92
WW TC ON ROD 10,63 IN	878.8	0.3	0.98
DUCT THERMOCOUPLES			
DUCT WALL TC,CH 38,19 IN(DEG F)	850.9	0.6	-.04
DUCT WALL TC,CH 53,19 IN	858.3	0.0	0.23
DUCT WALL TC,CH 28,21 IN	861.4	0.3	0.34
DUCT WALL TC,CH 43,21 IN	851.0	0.5	-.04
DUCT WALL TC,CH 44,21 IN	851.5	0.4	-.02
TEST SECTION HOUSING THERMOCOUPLES			
TS SHELL-BOT(DEG F)	853.2	0.6	
TS GUARD HTR-BOT	816.1	0.3	
TS HTR-BOT	760.2	0.6	
TS SHELL-LOW CTR	855.9	0.3	
TS GUARD HTR-LOW CTR	856.4	0.8	
TS HTR-LOW CTR	778.6	0.7	
TS SHELL-UP CTR	876.5	0.4	
TS GUARD HTR-UP CTR	881.4	0.8	
TS HTR-UP CTR	852.1	0.8	
TS SHELL-TOP	875.3	1.1	
TS GUARD HTR-TOP	877.6	1.9	
TS HTR-TOP	870.1	1.1	
REFERENCE BOX THERMOCOUPLES			
150 DEG REF BOX 1(DEG F)	148.4	1.5	
150 DEG REF BOX 2	148.6	0.8	
150 DEG REF BOX 3	151.6	0.8	
150 DEG REF BOX 4	149.4	0.4	
150 DEG REF BOX 5	147.0	0.2	
MISCELLANEOUS			
SOD PUMP SPEED(RPM)	677.6	6.5	
EXPANSION TANK LEVEL(% FULL)	74.6	0.2	

TEST SERIES 10(BUNDLE 3C); TEST 10 RUN 103 01/17/78 12 10 35

CONDITIONS:

TEST SECTION FLOW: 0.91 L/S (14.3 GPM)

TEST SECTION POWER
(1 ROD HEATED): 14.9 KW (27.9 KW/M/ROD)(8.5 KW/FT/ROD)

TEST SECTION INLET TEMPERATURE: 455 DEG C (851 DEG F)

TEST SECTION OUTLET TEMPERATURE: 470 DEG C (879 DEG F)

HEAT BALANCE:

HEAT INPUT FROM 31 FUEL PIN SIMULATORS: 14.9 KW

HEAT ABSORBED BY SODIUM=
FLOW X SP.HEAT X (TS OUT TEMP - TS IN TEMP) 14.8 KW

% OF INPUT HEAT ACCOUNTED FOR: 99.5 %

INSTRUMENT	20-SEC AVG	STD DEV
HEATER POWERS(KW)		
HTR POWER IN ROD 3	14.9	0.0
HTR POWER IN RODS 8,9,10	0.1	0.0
HTR POWER IN RODS 14,15,16	0.0	0.0
HTR POWER IN RODS 1,2,11,19	0.0	0.0
HTR POWER IN RODS 5,6,13,17	0.1	0.0
HTR POWER IN RODS 4,7,12,18	-0.0	0.0
HTR POWER IN RODS 30,31	-0.0	0.0
HTR POWER IN RODS 24,25,27,28	-0.3	0.0
HTR POWER IN RODS 33,34	-0.0	0.0
HTR POWER IN RODS 21,22,36,37	0.0	0.0
FLOWS		
TEST SECTION(TS) FLOW IN(GPM)	14.3	0.1
TS FLOW OUT(GPM)	14.3	0.1
TS BYPASS FLOW(GPM)	1.7	0.1
LOOP FLOW TOTAL(GPM)	14.4	0.1
RADIATOR AIR FLOW(CFM)	1.1	0.0
PRESSURES		
TS IN PRESS(PSIG)	14.9	0.1
TS OUT PRESS(PSIG)	6.0	0.0
PUMP OUT PRESS(PSIG)	10.2	0.1
TS LINE PRESS IN(PSIG)	13.9	0.1
EXP TANK ARGON PRESS(PSIG)	2.4	0.1
TS BYP LINE PRESS IN(PSIG)	15.2	0.1
TS BYP LINE PRESS OUT(PSIG)	9.4	0.1

Test 10, run 103 (continued)

INSTRUMENT	20-SEC AVG	STD DEV	NORMALIZED TEMP
LOOP THERMOCOUPLES			
TEST SECT INLET WELL(DEG F)	852.0	0.4	
TEST SECT OUTLET WELL(DEG F)	879.5	0.4	
PUMP IN PIPE WALL TC	866.6	4.8	
PUMP OUT PIPE WALL TC	844.6	0.9	
RAD IN PIPE WALL TC	871.4	0.9	
RAD OUT PIPE WALL TC	848.4	0.4	
HEATER INTERNAL THERMOCOUPLES			
HTR TC IN HTR 08,12AB IN(DEG F)	875.5	0.3	0.85
HTR TC IN HTR 13,12AB IN	853.0	0.4	0.04
HTR TC IN HTR 18,12AB IN	850.8	0.2	-.04
HTR TC IN HTR 22,12AB IN	889.3	0.4	1.35
HTR TC IN HTR 08,12BC IN	877.0	0.5	0.91
HTR TC IN HTR 13,12BC IN	852.4	0.3	0.02
HTR TC IN HTR 18,12BC IN	850.6	0.4	-.05
HTR TC IN HTR 22,12BC IN	889.4	1.1	1.36
HTR TC IN HTR 09,15AB IN	955.4	8.4	3.76
HTR TC IN HTR 10,15BC IN	982.1	0.4	4.73
HTR TC IN HTR 16,15BC IN	851.1	0.5	-.03
HTR TC IN HTR 25,15BC IN	858.0	0.7	0.22
HTR TC IN HTR 02,15.1 IN	913.9	1.2	2.25
HTR TC IN HTR 03,15.1 IN	1099.8	1.0	9.00
HTR TC IN HTR 06,15.1 IN	883.0	0.7	1.13
HTR TC IN HTR 15,15.1 IN	858.7	0.5	0.24
HTR TC IN HTR 24,15.1 IN	897.1	0.2	1.64
HTR TC IN HTR 33,15.1 IN	852.4	0.3	0.01
HTR TC IN HTR 36,15.1 IN	851.0	0.4	-.04
HTR TC IN HTR 02,15.4 IN	951.4	1.7	3.61
HTR TC IN HTR 03,15.4 IN	1108.8	1.1	9.33
HTR TC IN HTR 06,15.4 IN	889.0	0.7	1.34
HTR TC IN HTR 15,15.4 IN	866.8	0.4	0.54
HTR TC IN HTR 24,15.4 IN	897.1	0.2	1.64
HTR TC IN HTR 33,15.4 IN	852.5	0.1	0.02
HTR TC IN HTR 34,15.4 IN	791.4	9.5	****
HTR TC IN HTR 36,15.4 IN	850.0	0.1	-.07
HTR TC IN HTR 02,15.6 IN	943.6	1.4	3.33
HTR TC IN HTR 03,15.6 IN	1112.7	1.2	9.47
HTR TC IN HTR 06,15.6 IN	899.8	0.6	1.74
HTR TC IN HTR 15,15.6 IN	867.3	0.3	0.56
HTR TC IN HTR 24,15.6 IN	885.8	0.5	1.23
HTR TC IN HTR 33,15.6 IN	851.0	0.3	-.04
HTR TC IN HTR 34,15.6 IN	849.5	2.4	-.09
HTR TC IN HTR 36,15.6 IN	850.7	0.3	-.05
HTR TC IN HTR 03,15.9 IN	1082.3	0.4	8.37
HTR TC IN HTR 06,15.9 IN	894.1	0.5	1.53
HTR TC IN HTR 15,15.9 IN	859.0	0.5	0.26
HTR TC IN HTR 24,15.9 IN	885.1	0.4	1.20
HTR TC IN HTR 33,15.9 IN	849.1	0.2	-.10
HTR TC IN HTR 34,15.9 IN	849.7	0.4	-.08
HTR TC IN HTR 36,15.9 IN	850.6	1.1	-.05

Test 10, run 103 (continued)

INSTRUMENT	20-SEC AVG	STD DEV	NORMALIZED TEMP
HTR TC IN HTR 04,16,1 IN	941.1	1.5	3.24
HTR TC IN HTR 05,16,1 IN	884.5	0.5	1.18
HTR TC IN HTR 07,16,1 IN	892.0	0.7	1.45
HTR TC IN HTR 21,16,1 IN	863.0	0.4	0.40
HTR TC IN HTR 27,16,1 IN	854.2	0.9	0.08
HTR TC IN HTR 04,16,4 IN	943.6	1.7	3.33
HTR TC IN HTR 05,16,4 IN	883.1	0.6	1.13
HTR TC IN HTR 07,16,4 IN	891.1	0.7	1.42
HTR TC IN HTR 21,16,4 IN	866.7	0.4	0.53
HTR TC IN HTR 27,16,4 IN	854.0	0.8	0.07
HTR TC IN HTR 04,16,6 IN	925.2	1.2	2.66
HTR TC IN HTR 05,16,6 IN	882.5	0.4	1.11
HTR TC IN HTR 07,16,6 IN	901.0	0.8	1.78
HTR TC IN HTR 21,16,6 IN	866.8	0.4	0.54
HTR TC IN HTR 27,16,6 IN	853.5	0.9	0.06
HTR TC IN HTR 04,16,9 IN	921.2	1.3	2.51
HTR TC IN HTR 07,16,9 IN	899.8	1.0	1.74
HTR TC IN HTR 21,16,9 IN	866.1	0.7	0.51
HTR TC IN HTR 27,16,9 IN	853.4	0.3	0.05
HTR TC IN HTR 11,18AB IN	997.8	0.4	5.30
HTR TC IN HTR 12,18AB IN	879.9	0.5	1.01
HTR TC IN HTR 14,18AB IN	863.8	9.9	0.43
HTR TC IN HTR 30,18AB IN	844.3	7.3	-.28
HTR TC IN HTR 11,18BC IN	995.8	0.5	5.22
HTR TC IN HTR 12,18BC IN	875.7	0.3	0.86
HTR TC IN HTR 14,18BC IN	968.6	5.9	4.24
HTR TC IN HTR 17,18BC IN	857.8	0.4	0.21
HTR TC IN HTR 30,18BC IN	842.8	7.2	-.33
WIRE WRAP THERMOCOUPLES			
WW TC ON HTR 12,-1 IN(DEG F)	855.7	2.7	0.14
WW TC ON HTR 16,-1 IN	851.6	0.4	-.01
WW TC ON HTR 12,01 IN	853.4	0.4	0.05
WW TC ON HTR 16,09 IN	856.6	0.4	0.17
WW TC ON HTR 04,11 IN	959.1	0.5	3.89
WW TC ON HTR 05,11 IN	874.2	0.4	0.81
WW TC ON HTR 13,11 IN	862.9	0.4	0.40
WW TC ON HTR 17,11 IN	854.5	0.4	0.09
WW TC ON HTR 28,11 IN	855.9	0.3	0.14
WW TC ON HTR 31,11 IN	854.1	0.3	0.08
WW TC ON HTR 03,13 IN	1014.6	0.8	5.91
WW TC ON HTR 13,13 IN	856.8	0.4	0.18
WW TC ON HTR 15,13 IN	853.1	0.4	0.04
WW TC ON HTR 17,13 IN	854.1	0.3	0.08
WW TC ON HTR 22,13 IN	869.8	0.4	0.65
WW TC ON HTR 01,15 IN	885.7	0.5	1.23
WW TC ON HTR 03,15 IN	986.6	0.5	4.89
WW TC ON HTR 08,15 IN	872.0	1.0	0.73

Test 10, run 103 (continued)

INSTRUMENT	20-SEC AVG	STD DEV	NORMALIZED TEMP
WW TC ON HTR 10,15 IN	992.7	0.3	5.11
WW TC ON HTR 15,15 IN	854.2	0.3	0.08
WW TC ON HTR 19,15 IN	870.7	0.2	0.68
WW TC ON HTR 25,15 IN	860.3	0.4	0.30
WW TC ON HTR 36,15 IN	853.9	1.1	0.07
WW TC ON HTR 01,17 IN	902.7	1.4	1.84
WW TC AJ HTR 02,17 IN	958.3	1.8	3.86
WW TC OP HTR 02,17 IN	968.8	1.9	4.24
WW TC ON HTR 08,17 IN	878.3	0.4	0.96
WW TC ON HTR 10,17 IN	936.5	0.4	3.07
WW TC ON HTR 11,17 IN	886.0	0.5	1.24
WW TC ON HTR 18,17 IN	860.8	0.4	0.32
WW TC ON HTR 19,17 IN	875.2	0.4	0.94
WW TC ON HTR 21,17 IN	881.0	0.4	1.05
WW TC ON HTR 22,17 IN	903.2	0.5	1.86
WW TC ON HTR 33,17 IN	852.2	0.5	0.01
WW TC ON HTR 37,17 IN	858.9	1.1	0.25
WW TC ON HTR 06,19 IN	875.6	0.4	0.86
WW TC AJ HTR 07,19 IN	903.6	0.9	1.87
WW TC OP HTR 07,19 IN	904.8	0.7	1.92
WW TC ON HTR 09,19 IN	950.7	0.4	3.59
WW TC ON HTR 14,19 IN	855.4	0.4	0.12
WW TC ON HTR 18,19 IN	862.6	0.4	0.39
WW TC ON HTR 27,19 IN	858.2	0.3	0.23
WW TC ON HTR 30,19 IN	853.0	0.5	0.04
WW TC ON HTR 34,19 IN	850.0	1.0	-.07
WW TC ON HTR 36,19 IN	856.8	0.6	0.17
WW TC ON HTR 37,19 IN	863.6	0.6	0.42
WW TC ON HTR 05,21 IN	886.3	0.3	1.25
WW TC ON HTR 06,21 IN	880.2	0.5	1.02
WW TC ON HTR 21,21 IN	881.1	0.5	1.06
WW TC ON HTR 24,21 IN	868.4	0.4	0.60
WW TC ON HTR 25,21 IN	867.4	0.5	0.56
WW TC ON HTR 27,21 IN	860.1	0.5	0.29
WW TC ON HTR 30,21 IN	853.7	0.5	0.06
WW TC ON HTR 33,21 IN	851.6	1.0	-.01
WW TC ON HTR 34,21 IN	850.9	0.7	-.04
WW TC ON HTR 04,23 IN	975.8	0.5	4.50
WW TC ON HTR 09,23 IN	900.4	0.5	1.76
WW TC ON HTR 14,23 IN	858.8	0.5	0.25
WW TC ON HTR 24,23 IN	882.4	0.3	1.10
WW TC ON HTR 28,23 IN	857.0	0.4	0.18
WW TC ON HTR 31,23 IN	855.9	0.3	0.14
WW TC ON ROD 01,25 IN	887.2	0.2	1.28
WW TC ON ROD 02,25 IN	880.8	0.4	1.05
WW TC ON ROD 05,25 IN	868.1	0.3	0.59
WW TC ON ROD 08,25 IN	866.8	0.4	0.54
WW TC ON ROD 14,25 IN	857.4	0.1	0.20
WW TC ON ROD 04,27 IN	872.3	0.4	0.74
WW TC ON ROD 07,27 IN	877.9	1.2	0.94
WW TC ON ROD 12,27 IN	863.3	0.7	0.41
WW TC ON ROD 16,27 IN	856.5	0.3	0.16

Test 10, run 103 (continued)

INSTRUMENT	20-SEC AVG	STD DEV	NORMALIZED TEMP
WW TC ON ROD 18.27 IN	858.1	0.4	0.22
WW TC ON ROD 03.29 IN	923.4	0.3	2.60
WW TC ON ROD C6.29 IN	872.9	0.4	0.76
WW TC ON ROD 10.29 IN	891.8	1.5	1.45
WW TC ON ROD C1.37 IN	893.4	0.4	1.51
WW TC ON ROD C2.37 IN	889.7	0.2	1.37
WW TC ON ROD 08.37 IN	876.2	0.4	0.88
WW TC ON ROD 14.37 IN	862.6	0.4	0.39
WW TC ON ROD 04.51 IN	878.9	0.1	0.98
WW TC ON ROD 07.51 IN	880.4	0.7	1.03
WW TC ON ROD 12.51 IN	870.6	0.1	0.68
WW TC ON ROD 16.51 IN	863.9	0.3	0.43
WW TC ON ROD 18.51 IN	867.7	0.4	0.57
WW TC ON ROD 03.63 IN	894.2	0.4	1.53
WW TC ON ROD C6.63 IN	869.0	0.2	0.62
WW TC ON ROD 10.63 IN	892.2	0.2	1.46
DUCT THERMOCOUPLES			
DUCT WALL TC.CH 38.19 IN(DEG F)	853.7	0.8	0.06
DUCT WALL TC.CH 53.19 IN	851.8	0.3	-.01
DUCT WALL TC.CH 28.21 IN	868.1	0.2	0.59
DUCT WALL TC.CH 43.21 IN	851.8	0.8	-.00
DUCT WALL TC.CH 44.21 IN	852.3	0.5	0.01
TEST SECTION HOUSING THERMOCOUPLES			
TS SHELL-BOT(DEG F)	853.4	0.3	
TS GUARD HTR-BOT	816.9	0.3	
TS HTR-BOT	761.5	0.5	
TS SHELL-LOW CTR	859.7	0.4	
TS GUARD HTR-LOW CTR	859.2	1.2	
TS HTR-LOW CTR	778.9	0.5	
TS SHELL-UP CTR	878.0	0.4	
TS GUARD HTR-UP CTR	882.5	0.7	
TS HTR-UP CTR	853.0	0.9	
TS SHELL-TOP	875.8	0.7	
TS GUARD HTR-TOP	878.2	1.8	
TS HTR-TOP	871.3	1.2	
REFERENCE BOX THERMOCOUPLES			
150 DEG REF BOX 1(DEG F)	148.1	0.9	
150 DEG REF BOX 2	148.1	0.6	
150 DEG REF BOX 3	151.5	0.7	
150 DEG REF BOX 4	149.5	0.4	
150 DEG REF BOX 5	146.4	0.4	
MISCELLANEOUS			
SOD PUMP SPEED(RPM)	677.2	2.8	
EXPANSION TANK LEVEL(% FULL)	74.6	0.1	

TEST SERIES 10(BUNDLE 3C); TEST 10 RUN 104 01/17/78 12 37 28

CONDITIONS:
TEST SECTION FLOW: 0.91 L/S (14.3 GPM)
TEST SECTION POWER
(1 ROD HEATED): 14.5 KW (27.3 KW/M/ROD)(8.3 KW/FT/ROD)

TEST SECTION INLET TEMPERATURE: 455 DEG C (851 DEG F)
TEST SECTION OUTLET TEMPERATURE: 470 DEG C (878 DEG F)

HEAT BALANCE:

HEAT INPUT FROM 31 FUEL PIN SIMULATORS: 14.5 KW
HEAT ABSORBED BY SODIUM=
FLOW X SP.HEAT X (TS OUT TEMP - TS IN TEMP) 14.3 KW
% OF INPUT HEAT ACCOUNTED FOR: 98.6 %

INSTRUMENT	20-SEC AVG	STD DEV
HEATER POWERS(KW)		
HTR POWER IN ROD 4	14.5	0.0
HTR POWER IN RODS 8,9,10	0.1	0.0
HTR POWER IN RODS 14,15,16	0.0	0.0
HTR POWER IN RODS 1,2,11,19	0.0	0.0
HTR POWER IN RODS 5,6,13,17	0.1	0.0
HTR POWER IN RODS 3,7,12,18	-0.0	0.0
HTR POWER IN RODS 30,31	-0.0	0.0
HTR POWER IN RODS 24,25,27,28	-0.3	0.0
HTR POWER IN RODS 33,34	-0.0	0.0
HTR POWER IN RODS 21,22,36,37	0.0	0.0
FLOWS		
TEST SECTION(TS) FLOW IN(GPM)	14.3	0.1
TS FLOW OUT(GPM)	14.3	0.1
TS BYPASS FLOW(GPM)	1.3	0.1
LOOP FLOW TOTAL(GPM)	14.4	0.1
RADIATOR AIR FLOW(CFM)	1.2	0.0
PRESSURES		
TS IN PRESS(PSIG)	14.9	0.1
TS OUT PRESS(PSIG)	6.0	0.0
PUMP OUT PRESS(PSIG)	10.2	0.1
TS LINE PRESS IN(PSIG)	13.8	0.1
EXP TANK ARGON PRESS(PSIG)	2.4	0.1
TS BYP LINE PRESS IN(PSIG)	15.1	0.1
TS BYP LINE PRESS OUT(PSIG)	9.4	0.1

Test 10, run 104 (continued)

INSTRUMENT	20-SEC AVG	STD DEV	NORMALIZED TEMP
LOOP THERMOCOUPLES			
TEST SECT INLET WELL(DEG F)	851.7	0.4	
TEST SECT OUTLET WELL(DEG F)	878.3	0.4	
PUMP IN PIPE WALL TC	865.8	4.8	
PUMP OUT PIPE WALL TC	843.9	1.1	
RAD IN PIPE WALL TC	870.6	0.9	
RAD OUT PIPE WALL TC	847.5	0.5	
HEATER INTERNAL THERMOCOUPLES			
HTR TC IN HTR 08,12AB IN(DEG F)	854.6	0.5	0.11
HTR TC IN HTR 13,12AB IN	862.4	0.3	0.40
HTR TC IN HTR 18,12AB IN	850.0	0.3	-.06
HTR TC IN HTR 22,12AB IN	852.5	0.2	0.03
HTR TC IN HTR 08,12BC IN	856.1	0.5	0.17
HTR TC IN HTR 13,12BC IN	863.2	0.4	0.43
HTR TC IN HTR 18,12BC IN	849.6	0.5	-.08
HTR TC IN HTR 22,12BC IN	852.2	1.0	0.02
HTR TC IN HTR 09,15AB IN	881.7	8.6	1.12
HTR TC IN HTR 10,15BC IN	871.5	0.1	0.74
HTR TC IN HTR 16,15BC IN	851.8	0.5	0.01
HTR TC IN HTR 25,15BC IN	872.6	1.2	0.78
HTR TC IN HTR 02,15.1 IN	879.9	0.6	1.06
HTR TC IN HTR 03,15.1 IN	920.2	2.1	2.57
HTR TC IN HTR 06,15.1 IN	897.2	2.2	1.71
HTR TC IN HTR 15,15.1 IN	878.5	0.5	1.01
HTR TC IN HTR 24,15.1 IN	870.0	0.4	0.69
HTR TC IN HTR 33,15.1 IN	851.6	0.1	-.00
HTR TC IN HTR 36,15.1 IN	848.5	0.4	-.12
HTR TC IN HTR 02,15.4 IN	893.1	3.8	1.55
HTR TC IN HTR 03,15.4 IN	939.4	3.4	3.29
HTR TC IN HTR 06,15.4 IN	900.9	2.4	1.85
HTR TC IN HTR 15,15.4 IN	899.9	0.6	1.81
HTR TC IN HTR 24,15.4 IN	872.1	0.6	0.77
HTR TC IN HTR 33,15.4 IN	852.4	0.1	0.03
HTR TC IN HTR 34,15.4 IN	735.9	14.1	****
HTR TC IN HTR 36,15.4 IN	848.3	0.3	-.13
HTR TC IN HTR 02,15.6 IN	898.3	0.7	1.75
HTR TC IN HTR 03,15.6 IN	931.6	2.4	3.00
HTR TC IN HTR 06,15.6 IN	902.8	2.2	1.92
HTR TC IN HTR 15,15.6 IN	898.3	1.0	1.75
HTR TC IN HTR 24,15.6 IN	871.5	0.4	0.74
HTR TC IN HTR 33,15.6 IN	850.4	0.4	-.05
HTR TC IN HTR 34,15.6 IN	864.0	4.5	0.46
HTR TC IN HTR 36,15.6 IN	849.4	0.4	-.09
HTR TC IN HTR 03,15.9 IN	950.7	1.2	3.72
HTR TC IN HTR 06,15.9 IN	900.6	1.4	1.84
HTR TC IN HTR 15,15.9 IN	884.3	0.4	1.22
HTR TC IN HTR 24,15.9 IN	870.5	0.9	0.71
HTR TC IN HTR 33,15.9 IN	849.4	0.4	-.09
HTR TC IN HTR 34,15.9 IN	847.7	0.7	-.15
HTR TC IN HTR 36,15.9 IN	852.4	1.3	0.03

Test 10, run 104 (continued)

INSTRUMENT	20-SEC AVG	STD DEV	NORMALIZED TEMP
HTR TC IN HTR 04,16.1 IN	1099.5	1.9	9.30
HTR TC IN HTR 05,16.1 IN	961.5	1.6	4.12
HTR TC IN HTR 07,16.1 IN	875.8	0.5	0.90
HTR TC IN HTR 21,16.1 IN	852.4	0.5	0.03
HTR TC IN HTR 27,16.1 IN	879.8	1.2	1.06
HTR TC IN HTR 04,16.4 IN	1104.7	2.1	9.50
HTR TC IN HTR 05,16.4 IN	953.3	5.9	3.81
HTR TC IN HTR 07,16.4 IN	876.0	0.7	0.91
HTR TC IN HTR 21,16.4 IN	852.3	0.7	0.02
HTR TC IN HTR 27,16.4 IN	880.2	1.1	1.07
HTR TC IN HTR 04,16.6 IN	1108.8	0.5	9.65
HTR TC IN HTR 05,16.6 IN	931.9	1.2	3.01
HTR TC IN HTR 07,16.6 IN	878.8	0.5	1.02
HTR TC IN HTR 21,16.6 IN	851.6	0.9	-.00
HTR TC IN HTR 27,16.6 IN	879.4	0.6	1.04
HTR TC IN HTR 04,16.9 IN	1111.0	0.8	9.73
HTR TC IN HTR 07,16.9 IN	878.6	0.8	1.01
HTR TC IN HTR 21,16.9 IN	850.0	1.1	-.06
HTR TC IN HTR 27,16.9 IN	878.7	0.4	1.01
HTR TC IN HTR 11,18AB IN	966.7	0.8	4.32
HTR TC IN HTR 12,18AB IN	957.3	1.4	3.97
HTR TC IN HTR 14,18AB IN	866.5	9.9	0.55
HTR TC IN HTR 30,18AB IN	846.3	7.4	-.20
HTR TC IN HTR 11,18BC IN	964.3	0.6	4.23
HTR TC IN HTR 12,18BC IN	957.8	1.5	3.98
HTR TC IN HTR 14,18BC IN	946.8	13.9	3.57
HTR TC IN HTR 17,18BC IN	858.1	0.3	0.24
HTR TC IN HTR 30,18BC IN	844.9	7.1	-.26
WIRE WRAP THERMOCOUPLES			
WW TC ON HTR 12,-1 IN(DEG F)	861.0	3.7	0.35
WW TC ON HTR 16,-1 IN	852.0	0.7	0.01
WW TC ON HTR 12,01 IN	871.1	0.4	0.73
WW TC ON HTR 16,09 IN	855.5	0.6	0.14
WW TC ON HTR 04,11 IN	994.8	0.5	5.37
WW TC ON HTR 05,11 IN	936.6	0.5	3.19
WW TC ON HTR 13,11 IN	949.1	0.8	3.66
WW TC ON HTR 17,11 IN	853.3	0.3	0.06
WW TC ON HTR 28,11 IN	861.3	0.7	0.36
WW TC ON HTR 31,11 IN	853.7	0.5	0.08
WW TC ON HTR 03,13 IN	902.1	1.0	1.89
WW TC ON HTR 13,13 IN	885.0	0.6	1.25
WW TC ON HTR 15,13 IN	853.9	0.4	0.08
WW TC ON HTR 17,13 IN	853.1	0.4	0.05
WW TC ON HTR 22,13 IN	855.9	0.4	0.16
WW TC ON HTR 01,15 IN	917.7	0.5	2.48
WW TC ON HTR 03,15 IN	953.1	0.6	3.81
WW TC ON HTR 08,15 IN	852.3	1.1	0.02
WW TC ON HTR 10,15 IN	890.0	1.0	1.44
WW TC ON HTR 15,15 IN	855.7	0.3	0.15
WW TC ON HTR 19,15 IN	860.8	0.2	0.34

Test 10, run 104 (continued)

INSTRUMENT	20-SEC AVG	STD DEV	NORMALIZED TEMP
WW TC ON HTR 25,15 IN	872.9	0.7	0.80
WW TC ON HTR 36,15 IN	852.4	1.1	0.03
WW TC ON HTR 01,17 IN	1009.5	1.1	5.92
WW TC AJ HTR 02,17 IN	877.6	0.9	0.97
WW TC OP HTR 02,17 IN	890.7	1.6	1.47
WW TC ON HTR 08,17 IN	856.7	0.4	0.19
WW TC ON HTR 10,17 IN	889.3	1.1	1.41
WW TC ON HTR 11,17 IN	910.1	1.9	2.19
WW TC ON HTR 18,17 IN	858.1	0.4	0.24
WW TC ON HTR 19,17 IN	860.2	0.5	0.32
WW TC ON HTR 21,17 IN	857.8	0.5	0.23
WW TC ON HTR 22,17 IN	866.4	0.6	0.55
WW TC ON HTR 33,17 IN	852.4	0.8	0.03
WW TC ON HTR 37,17 IN	852.7	1.3	0.04
WW TC ON HTR 06,19 IN	895.6	0.5	1.65
WW TC AJ HTR 07,19 IN	874.7	0.7	0.86
WW TC OP HTR C7,19 IN	878.9	0.5	1.02
WW TC ON HTR 09,19 IN	870.0	0.6	0.69
WW TC ON HTR 14,19 IN	867.5	0.5	0.59
WW TC ON HTR 18,19 IN	857.8	0.4	0.23
WW TC ON HTR 27,19 IN	861.4	0.4	0.36
WW TC ON HTR 30,19 IN	854.5	0.5	0.11
WW TC ON HTR 34,19 IN	849.0	1.0	-.10
WW TC ON HTR 36,19 IN	852.9	0.8	0.04
WW TC ON HTR 37,19 IN	854.4	0.7	0.10
WW TC ON HTR 05,21 IN	993.4	0.4	5.32
WW TC ON HTR 06,21 IN	892.7	0.5	1.54
WW TC ON HTR 21,21 IN	863.1	0.4	0.43
WW TC ON HTR 24,21 IN	869.0	0.3	0.65
WW TC ON HTR 25,21 IN	873.1	0.7	0.81
WW TC ON HTR 27,21 IN	872.3	0.5	0.78
WW TC ON HTR 30,21 IN	857.0	0.5	0.20
WW TC ON HTR 33,21 IN	852.2	1.4	0.02
WW TC ON HTR 34,21 IN	849.0	1.0	-.10
WW TC ON HTR 04,23 IN	1026.0	0.5	6.54
WW TC ON HTR C9,23 IN	860.2	1.3	0.32
WW TC ON HTR 14,23 IN	867.9	1.7	0.61
WW TC ON HTR 24,23 IN	873.8	0.4	0.83
WW TC ON HTR 28,23 IN	866.9	1.1	0.57
WW TC ON HTR 31,23 IN	855.1	1.1	0.13
WW TC ON ROD 01,25 IN	905.5	0.3	2.02
WW TC ON ROD 02,25 IN	866.1	0.4	0.54
WW TC ON ROD 05,25 IN	887.8	0.4	1.36
WW TC ON ROD C8,25 IN	855.9	0.2	0.16
WW TC ON ROD 14,25 IN	859.2	0.3	0.28
WW TC ON ROD 04,27 IN	917.3	0.4	2.46
WW TC ON ROD C7,27 IN	881.3	1.2	1.11
WW TC ON ROD 12,27 IN	876.1	1.0	0.92
WW TC ON ROD 16,27 IN	856.1	0.4	0.17
WW TC ON ROD 18,27 IN	855.8	0.1	0.15
WW TC ON ROD 03,29 IN	946.2	0.4	3.55
WW TC ON ROD C6,29 IN	894.7	0.3	1.61

Test 10, run 104 (continued)

INSTRUMENT	20-SEC AVG	STD DEV	NORMALIZED TEMP
WW TC ON ROD 10,29 IN	885.4	1.2	1.26
WW TC ON ROD 01,37 IN	890.6	0.2	1.46
WW TC ON ROD 02,37 IN	871.5	0.1	0.74
WW TC ON ROD 08,37 IN	859.7	0.3	0.30
WW TC ON ROD 14,37 IN	871.5	0.0	0.74
WW TC ON ROD 04,51 IN	893.9	0.2	1.58
WW TC ON ROD C7,51 IN	875.8	0.4	0.90
WW TC ON ROD 12,51 IN	880.7	0.3	1.09
WW TC ON ROD 16,51 IN	863.3	0.3	0.44
WW TC ON ROD 18,51 IN	861.6	0.2	0.37
WW TC ON ROD 03,63 IN	896.3	0.2	1.68
WW TC ON ROD 06,63 IN	870.8	0.3	0.72
WW TC ON ROD 10,63 IN	893.8	0.1	1.58
DUCT THERMOCOUPLES			
DUCT WALL TC,CH 38,19 IN(DEG F)	861.9	0.9	0.38
DUCT WALL TC,CH 53,19 IN	849.9	0.2	-.07
DUCT WALL TC,CH 28,21 IN	854.2	0.3	0.09
DUCT WALL TC,CH 43,21 IN	852.5	0.8	0.03
DUCT WALL TC,CH 44,21 IN	851.7	0.4	-.00
TEST SECTION HOUSING THERMOCOUPLES			
TS SHELL-BOT(DEG F)	852.8	0.6	
TS GUARD HTR-BOT	817.3	0.4	
TS HTR-BOT	762.1	0.5	
TS SHELL-LOW CTR	858.0	0.4	
TS GUARD HTR-LOW CTR	858.0	0.7	
TS HTR-LOW CTR	779.4	0.9	
TS SHELL-UP CTR	875.8	0.6	
TS GUARD HTR-UP CTR	882.7	0.8	
TS HTR-UP CTR	853.4	1.0	
TS SHELL-TOP	878.9	0.9	
TS GUARD HTR-TOP	880.7	1.5	
TS HTR-TOP	871.6	1.2	
REFERENCE BOX THERMOCOUPLES			
150 DEG REF BOX 1(DEG F)	148.2	1.4	
150 DEG REF BOX 2	148.6	0.6	
150 DEG REF BOX 3	151.6	0.8	
150 DEG REF BOX 4	149.3	0.5	
150 DEG REF BOX 5	147.9	0.2	
MISCELLANEOUS			
SOD PUMP SPEED(RPM)	677.5	27.4	
EXPANSION TANK LEVEL(% FULL)	74.4	0.2	

TEST SERIES 10(BUNDLE 3C); TEST 10 RUN 105 01/17/78 13 4 55

CONDITIONS:

TEST SECTION FLOW: 0.91 L/S (14.4 GPM)

TEST SECTION POWER
(1 ROD HEATED): 14.4 KW (27.0 KW/M/ROD)(8.2 KW/FT/ROD)

TEST SECTION INLET TEMPERATURE: 454 DEG C (849 DEG F)

TEST SECTION OUTLET TEMPERATURE: 468 DEG C (875 DEG F)

HEAT BALANCE:

HEAT INPUT FROM 31 FUEL PIN SIMULATORS:	14.4 KW
HEAT ABSORBED BY SODIUM= FLOW X SP.HEAT X (TS OUT TEMP - TS IN TEMP)	14.2 KW
% OF INPUT HEAT ACCOUNTED FOR:	98.9 %

INSTRUMENT	20-SEC AVG	STD DEV
HEATER POWERS(KW)		
HTR POWER IN ROD 5	14.4	0.0
HTR POWER IN RODS 8,9,10	0.1	0.0
HTR POWER IN RODS 14,15,16	0.0	0.0
HTR POWER IN RODS 1,2,11,19	0.0	0.0
HTR POWER IN RODS 3,6,13,17	0.1	0.0
HTR POWER IN RODS 4,7,12,18	-0.0	0.0
HTR POWER IN RODS 30,31	-0.0	0.0
HTR POWER IN RODS 24,25,27,28	-0.4	0.0
HTR POWER IN RODS 33,34	-0.0	0.0
HTR POWER IN RODS 21,22,36,37	0.0	0.0
FLOWS		
TEST SECTION(TS) FLOW IN(GPM)	14.4	0.1
TS FLOW OUT(GPM)	14.4	0.1
TS BYPASS FLOW(GPM)	1.5	0.2
LOOP FLOW TOTAL(GPM)	14.4	0.1
RADIATOR AIR FLOW(CFM)	1.1	0.0
PRESSURES		
TS IN PRESS(PSIG)	14.9	0.1
TS OUT PRESS(PSIG)	6.0	0.0
PUMP OUT PRESS(PSIG)	10.2	0.1
TS LINE PRESS IN(PSIG)	13.8	0.1
EXP TANK ARGON PRESS(PSIG)	2.4	0.1
TS BYP LINE PRESS IN(PSIG)	15.1	0.1
TS BYP LINE PRESS OUT(PSIG)	9.4	0.1

Test 10, run 105 (continued)

INSTRUMENT	20-SEC AVG	STD DEV	NORMALIZED TEMP
LOOP THERMOCOUPLES			
TEST SECT INLET WELL(DEG F)	849.2	0.3	
TEST SECT OUTLET WELL(DEG F)	875.5	0.3	
PUMP IN PIPE WALL TC	863.4	4.4	
PUMP OUT PIPE WALL TC	841.2	0.9	
RAD IN PIPE WALL TC	867.3	0.8	
RAD OUT PIPE WALL TC	844.7	0.6	
HEATER INTERNAL THERMOCOUPLES			
HTR TC IN HTR 08,12AB IN(DEG F)	851.3	0.4	0.08
HTR TC IN HTR 13,12AB IN	873.9	0.3	0.94
HTR TC IN HTR 18,12AB IN	846.6	0.3	-.10
HTR TC IN HTR 22,12AB IN	846.9	0.4	-.09
HTR TC IN HTR 08,12BC IN	850.8	0.3	0.06
HTR TC IN HTR 13,12BC IN	873.3	0.5	0.92
HTR TC IN HTR 18,12BC IN	848.4	0.4	-.03
HTR TC IN HTR 22,12BC IN	848.0	1.0	-.05
HTR TC IN HTR 09,15AB IN	856.9	8.6	0.29
HTR TC IN HTR 10,15BC IN	849.0	0.4	-.01
HTR TC IN HTR 16,15BC IN	851.9	0.4	0.10
HTR TC IN HTR 25,15BC IN	851.0	0.6	0.07
HTR TC IN HTR 02,15.1 IN	870.8	0.4	0.82
HTR TC IN HTR 03,15.1 IN	882.8	0.8	1.28
HTR TC IN HTR 06,15.1 IN	947.7	2.6	3.74
HTR TC IN HTR 15,15.1 IN	976.3	0.4	4.83
HTR TC IN HTR 24,15.1 IN	849.1	0.1	-.00
HTR TC IN HTR 33,15.1 IN	852.4	0.3	0.12
HTR TC IN HTR 36,15.1 IN	847.5	0.2	-.07
HTR TC IN HTR 02,15.4 IN	876.5	0.6	1.04
HTR TC IN HTR 03,15.4 IN	886.5	0.8	1.42
HTR TC IN HTR 06,15.4 IN	930.0	2.8	3.07
HTR TC IN HTR 15,15.4 IN	977.9	0.6	4.89
HTR TC IN HTR 24,15.4 IN	847.7	0.3	-.06
HTR TC IN HTR 33,15.4 IN	852.5	0.1	0.12
HTR TC IN HTR 34,15.4 IN	870.9	5.7	0.82
HTR TC IN HTR 36,15.4 IN	846.7	0.2	-.09
HTR TC IN HTR 02,15.6 IN	879.2	0.6	1.14
HTR TC IN HTR 03,15.6 IN	891.3	0.8	1.60
HTR TC IN HTR 06,15.6 IN	922.3	3.6	2.78
HTR TC IN HTR 15,15.6 IN	973.2	0.5	4.71
HTR TC IN HTR 24,15.6 IN	848.4	0.4	-.03
HTR TC IN HTR 33,15.6 IN	850.0	0.1	0.03
HTR TC IN HTR 34,15.6 IN	855.7	1.8	0.25
HTR TC IN HTR 36,15.6 IN	846.7	0.2	-.10
HTR TC IN HTR 03,15.9 IN	884.0	0.3	1.32
HTR TC IN HTR 06,15.9 IN	927.6	3.4	2.98
HTR TC IN HTR 15,15.9 IN	973.5	0.4	4.72
HTR TC IN HTR 24,15.9 IN	850.0	0.2	0.03
HTR TC IN HTR 33,15.9 IN	850.0	0.1	0.03
HTR TC IN HTR 34,15.9 IN	845.4	0.4	-.15
HTR TC IN HTR 36,15.9 IN	847.2	0.9	-.08

Test 10, run 105 (continued)

INSTRUMENT	20-SEC AVG	STD DEV	NORMALIZED TEMP
HTR TC IN HTR 04,16,1 IN	933.9	1.2	3.22
HTR TC IN HTR 05,16,1 IN	1078.5	0.8	8.71
HTR TC IN HTR 07,16,1 IN	878.7	1.2	1.12
HTR TC IN HTR 21,16,1 IN	847.4	0.3	-.07
HTR TC IN HTR 27,16,1 IN	864.0	1.0	0.56
HTR TC IN HTR 04,16,4 IN	938.9	1.4	3.41
HTR TC IN HTR 05,16,4 IN	1081.5	1.0	8.83
HTR TC IN HTR 07,16,4 IN	878.3	1.3	1.10
HTR TC IN HTR 21,16,4 IN	847.1	0.4	-.08
HTR TC IN HTR 27,16,4 IN	865.3	0.7	0.61
HTR TC IN HTR 04,16,6 IN	949.7	0.7	3.82
HTR TC IN HTR 05,16,6 IN	1079.4	1.2	8.75
HTR TC IN HTR 07,16,6 IN	880.3	0.6	1.18
HTR TC IN HTR 21,16,6 IN	847.7	0.4	-.06
HTR TC IN HTR 27,16,6 IN	865.8	0.8	0.63
HTR TC IN HTR 04,16,9 IN	944.6	0.8	3.63
HTR TC IN HTR 07,16,9 IN	874.2	0.6	0.95
HTR TC IN HTR 21,16,9 IN	846.7	0.7	-.09
HTR TC IN HTR 27,16,9 IN	865.2	0.4	0.61
HTR TC IN HTR 11,18AB IN	871.9	0.5	0.86
HTR TC IN HTR 12,18AB IN	877.6	0.5	1.08
HTR TC IN HTR 14,18AB IN	882.1	9.6	1.25
HTR TC IN HTR 30,18AB IN	868.3	7.2	0.72
HTR TC IN HTR 11,18BC IN	872.9	0.4	0.90
HTR TC IN HTR 12,18BC IN	878.8	0.4	1.12
HTR TC IN HTR 14,18BC IN	946.3	13.9	3.69
HTR TC IN HTR 17,18BC IN	867.6	0.4	0.70
HTR TC IN HTR 30,18BC IN	864.2	7.2	0.57
WIRE WRAP THERMOCOUPLES			
WW TC ON HTR 12,-1 IN(DEG F)	848.6	2.6	-.02
WW TC ON HTR 16,-1 IN	852.3	0.3	0.12
WW TC ON HTR 12,01 IN	850.8	0.2	0.06
WW TC ON HTR 16,09 IN	854.4	0.5	0.20
WW TC ON HTR 04,11 IN	882.1	0.4	1.25
WW TC ON HTR 05,11 IN	972.1	0.3	4.67
WW TC ON HTR 13,11 IN	919.2	0.4	2.66
WW TC ON HTR 17,11 IN	850.6	0.4	0.05
WW TC ON HTR 28,11 IN	879.1	0.3	1.13
WW TC ON HTR 31,11 IN	851.1	0.4	0.07
WW TC ON HTR 03,13 IN	861.9	0.8	0.48
WW TC ON HTR 13,13 IN	925.4	0.6	2.90
WW TC ON HTR 15,13 IN	867.1	0.4	0.68
WW TC ON HTR 17,13 IN	850.8	0.3	0.06
WW TC ON HTR 22,13 IN	851.6	0.3	0.09
WW TC ON HTR 01,15 IN	953.3	0.4	3.95
WW TC ON HTR 03,15 IN	896.9	0.5	1.81
WW TC ON HTR 08,15 IN	850.2	1.2	0.04
WW TC ON HTR 10,15 IN	853.3	0.2	0.15
WW TC ON HTR 15,15 IN	872.8	0.5	0.90
WW TC ON HTR 19,15 IN	858.0	0.4	0.33

Test 10, run 105 (continued)

INSTRUMENT	20-SEC AVG	STD DEV	NORMALIZED TEMP
WW TC ON HTR 25,15 IN	857.5	0.3	0.32
WW TC ON HTR 36,15 IN	849.7	1.0	0.02
WW TC ON HTR 01,17 IN	977.6	1.0	4.88
WW TC AJ HTR 02,17 IN	862.1	0.6	0.49
WW TC OP HTR 02,17 IN	872.4	1.2	0.88
WW TC ON HTR 08,17 IN	852.3	0.3	0.12
WW TC ON HTR 10,17 IN	856.1	0.4	0.26
WW TC ON HTR 11,17 IN	858.2	0.2	0.34
WW TC ON HTR 18,17 IN	858.0	0.4	0.33
WW TC ON HTR 19,17 IN	857.0	0.5	0.30
WW TC ON HTR 21,17 IN	851.9	0.5	0.10
WW TC ON HTR 22,17 IN	853.8	0.4	0.17
WW TC ON HTR 33,17 IN	853.2	0.4	0.15
WW TC ON HTR 37,17 IN	849.4	1.1	0.01
WW TC ON HTR 06,19 IN	982.8	1.0	5.08
WW TC AJ HTR 07,19 IN	868.2	0.6	0.72
WW TC OP HTR 07,19 IN	876.3	0.6	1.03
WW TC ON HTR 09,19 IN	854.6	0.4	0.20
WW TC ON HTR 14,19 IN	895.4	0.5	1.76
WW TC ON HTR 18,19 IN	856.9	0.4	0.29
WW TC ON HTR 27,19 IN	861.3	0.4	0.46
WW TC ON HTR 30,19 IN	867.6	0.4	0.70
WW TC ON HTR 34,19 IN	847.7	1.0	-.06
WW TC ON HTR 36,19 IN	850.6	0.9	0.05
WW TC ON HTR 37,19 IN	849.3	0.7	0.00
WW TC ON HTR 05,21 IN	1043.1	0.2	7.37
WW TC ON HTR 06,21 IN	950.3	0.6	3.84
WW TC ON HTR 21,21 IN	853.0	0.4	0.15
WW TC ON HTR 24,21 IN	856.7	0.4	0.28
WW TC ON HTR 25,21 IN	856.8	0.4	0.29
WW TC ON HTR 27,21 IN	866.5	0.4	0.66
WW TC ON HTR 30,21 IN	880.6	0.4	1.19
WW TC ON HTR 33,21 IN	854.0	1.0	0.18
WW TC ON HTR 34,21 IN	846.8	1.0	-.09
WW TC ON HTR 04,23 IN	922.8	0.5	2.80
WW TC ON HTR 09,23 IN	851.4	0.4	0.08
WW TC ON HTR 14,23 IN	922.8	0.4	2.80
WW TC ON HTR 24,23 IN	857.3	0.3	0.31
WW TC ON HTR 28,23 IN	879.0	0.4	1.13
WW TC ON HTR 31,23 IN	855.5	0.4	0.24
WW TC ON ROD 01,25 IN	946.5	0.4	3.70
WW TC ON ROD 02,25 IN	861.8	0.4	0.48
WW TC ON ROD 05,25 IN	954.1	0.3	3.99
WW TC ON ROD 08,25 IN	850.8	0.2	0.06
WW TC ON ROD 14,25 IN	876.4	0.2	1.03
WW TC ON ROD 04,27 IN	916.9	0.3	2.57
WW TC ON ROD 07,27 IN	904.4	1.1	2.10
WW TC ON ROD 12,27 IN	874.5	1.3	0.96
WW TC ON ROD 16,27 IN	858.5	0.4	0.35
WW TC ON ROD 18,27 IN	856.6	0.2	0.28
WW TC ON ROD 03,29 IN	889.7	0.3	1.54
WW TC ON ROD 06,29 IN	940.0	0.1	3.45

Test 10, run 105 (continued)

INSTRUMENT	20-SEC AVG	STD DEV	NORMALIZED TEMP
WW TC ON ROD 10.29 IN	861.1	1.0	0.45
WW TC ON ROD 01.37 IN	896.9	0.3	1.81
WW TC ON ROD 02.37 IN	863.0	0.4	0.52
WW TC ON ROD 08.37 IN	853.2	0.3	0.15
WW TC ON ROD 14.37 IN	896.9	0.3	1.81
WW TC ON ROD 04.51 IN	897.9	0.0	1.85
WW TC ON ROD 07.51 IN	879.9	0.5	1.17
WW TC ON ROD 12.51 IN	883.0	0.1	1.29
WW TC ON ROD 16.51 IN	870.7	0.1	0.82
WW TC ON ROD 18.51 IN	860.7	0.2	0.44
WW TC ON ROD 03.63 IN	885.6	0.3	1.38
WW TC ON ROD 06.63 IN	881.3	0.3	1.22
WW TC ON ROD 10.63 IN	878.2	0.3	1.10
DUCT THERMOCOUPLES			
DUCT WALL TC.CH 38.19 IN(DEG F)	855.6	0.8	0.24
DUCT WALL TC.CH 53.19 IN	847.2	0.4	-.08
DUCT WALL TC.CH 28.21 IN	846.9	0.3	-.09
DUCT WALL TC.CH 43.21 IN	859.9	0.9	0.41
DUCT WALL TC.CH 44.21 IN	854.3	0.3	0.19
TEST SECTION HOUSING THERMOCOUPLES			
TS SHELL-BOT(DEG F)	850.4	0.7	
TS GUARD HTR-BOT	816.2	0.5	
TS HTR-BOT	761.8	0.8	
TS SHELL-LOW CTR	855.1	0.3	
TS GUARD HTR-LOW CTR	856.2	0.8	
TS HTR-LOW CTR	779.4	0.7	
TS SHELL-UP CTR	875.3	0.5	
TS GUARD HTR-UP CTR	881.4	0.7	
TS HTR-UP CTR	853.2	0.9	
TS SHELL-TOP	879.8	1.0	
TS GUARD HTR-TOP	880.9	1.8	
TS HTR-TOP	871.5	1.2	
REFERENCE BOX THERMOCOUPLES			
150 DEG REF BOX 1(DEG F)	148.0	1.2	
150 DEG REF BOX 2	149.0	0.8	
150 DEG REF BOX 3	151.7	0.9	
150 DEG REF BOX 4	149.4	0.6	
150 DEG REF BOX 5	147.1	0.3	
MISCELLANEOUS			
SOD PUMP SPEED(RPM)	677.7	45.3	
EXPANSION TANK LEVEL(% FULL)	74.3	0.1	

TEST SERIES 10(BUNDLE 3C); TEST 10 RUN 106 01/17/78 13 27 50

CONDITIONS:

TEST SECTION FLOW: 0.91 L/S (14.3 GPM)

TEST SECTION POWER
(1 ROD HEATED): 14.4 KW (27.0 KW/M/ROD)(8.2 KW/FT/ROD)

TEST SECTION INLET TEMPERATURE: 452 DEG C (847 DEG F)

TEST SECTION OUTLET TEMPERATURE: 467 DEG C (873 DEG F)

HEAT BALANCE:

HEAT INPUT FROM 31 FUEL PIN SIMULATORS: 14.4 KW

HEAT ABSORBED BY SODIUM=
FLOW X SP.HEAT X (TS OUT TEMP - TS IN TEMP) 14.4 KW

% OF INPUT HEAT ACCOUNTED FOR: 100.1 %

INSTRUMENT	20-SEC AVG	STD DEV
HEATER POWERS(KW)		
HTR POWER IN ROD 6	14.4	0.0
HTR POWER IN RODS 8,9,10	0.1	0.0
HTR POWER IN RODS 14,15,16	0.0	0.0
HTR POWER IN RODS 1,2,11,19	0.0	0.0
HTR POWER IN RODS 3,5,13,17	0.1	0.0
HTR POWER IN RODS 4,7,12,18	-0.0	0.0
HTR POWER IN RODS 30,31	-0.0	0.0
HTR POWER IN RODS 24,25,27,28	-0.4	0.0
HTR POWER IN RODS 33,34	-0.0	0.0
HTR POWER IN RODS 21,22,36,37	0.0	0.0
FLOWS		
TEST SECTION(TS) FLOW IN(GPM)	14.3	0.1
TS FLOW OUT(GPM)	14.4	0.1
TS BYPASS FLOW(GPM)	1.5	0.1
LOOP FLOW TOTAL(GPM)	14.4	0.1
RADIATOR AIR FLOW(CFM)	1.1	0.0
PRESSURES		
TS IN PRESS(PSIG)	14.9	0.1
TS OUT PRESS(PSIG)	6.0	0.0
PUMP OUT PRESS(PSIG)	10.2	0.0
TS LINE PRESS IN(PSIG)	13.8	0.1
EXP TANK ARGON PRESS(PSIG)	2.3	0.1
TS BYP LINE PRESS IN(PSIG)	15.1	0.1
TS BYP LINE PRESS OUT(PSIG)	9.4	0.1

Test 10, run 106 (continued)

INSTRUMENT	20-SEC AVG	STD DEV	NORMALIZED TEMP
LOOP THERMOCOUPLES			
TEST SECT INLET WELL(DEG F)	847.1	0.5	
TEST SECT OUTLET WELL(DEG F)	873.8	0.5	
PUMP IN PIPE WALL TC	861.6	4.4	
PUMP OUT PIPE WALL TC	840.5	6.3	
RAD IN PIPE WALL TC	867.5	8.0	
RAD OUT PIPE WALL TC	843.0	2.6	
HEATER INTERNAL THERMOCOUPLES			
HTR TC IN HTR 08,12AB IN(DEG F)	850.8	0.2	0.14
HTR TC IN HTR 13,12AB IN	849.7	0.6	0.10
HTR TC IN HTR 18,12AB IN	847.1	0.5	0.00
HTR TC IN HTR 22,12AB IN	851.4	28.8	0.16
HTR TC IN HTR 08,12BC IN	852.1	0.5	0.19
HTR TC IN HTR 13,12BC IN	849.5	0.5	0.09
HTR TC IN HTR 18,12BC IN	846.6	0.5	-.02
HTR TC IN HTR 22,12BC IN	848.2	15.6	0.04
HTR TC IN HTR 09,15AB IN	853.7	8.5	0.25
HTR TC IN HTR 10,15BC IN	847.6	0.4	0.02
HTR TC IN HTR 16,15BC IN	888.3	0.5	1.54
HTR TC IN HTR 25,15BC IN	845.3	1.9	-.07
HTR TC IN HTR 02,15.1 IN	885.7	0.7	1.45
HTR TC IN HTR 03,15.1 IN	870.9	0.4	0.89
HTR TC IN HTR 06,15.1 IN	1084.5	1.8	8.89
HTR TC IN HTR 15,15.1 IN	928.6	0.7	3.05
HTR TC IN HTR 24,15.1 IN	847.3	10.5	0.01
HTR TC IN HTR 33,15.1 IN	888.9	7.9	1.57
HTR TC IN HTR 36,15.1 IN	850.1	16.7	0.11
HTR TC IN HTR 02,15.4 IN	887.7	0.7	1.52
HTR TC IN HTR 03,15.4 IN	878.1	0.7	1.16
HTR TC IN HTR 06,15.4 IN	1087.0	1.8	8.98
HTR TC IN HTR 15,15.4 IN	952.7	0.6	3.95
HTR TC IN HTR 24,15.4 IN	847.6	12.5	0.02
HTR TC IN HTR 33,15.4 IN	888.8	0.2	1.56
HTR TC IN HTR 34,15.4 IN	695.5	1.8	****
HTR TC IN HTR 36,15.4 IN	841.7	13.2	-.20
HTR TC IN HTR 02,15.6 IN	887.1	0.6	1.50
HTR TC IN HTR 03,15.6 IN	874.9	0.4	1.04
HTR TC IN HTR 06,15.6 IN	1093.5	1.5	9.22
HTR TC IN HTR 15,15.6 IN	959.6	0.5	4.21
HTR TC IN HTR 24,15.6 IN	847.5	8.6	0.01
HTR TC IN HTR 33,15.6 IN	886.7	1.7	1.48
HTR TC IN HTR 34,15.6 IN	881.9	10.4	1.30
HTR TC IN HTR 36,15.6 IN	848.1	13.3	0.04
HTR TC IN HTR 03,15.9 IN	860.1	0.5	0.49
HTR TC IN HTR 06,15.9 IN	1116.1	1.3	****
HTR TC IN HTR 15,15.9 IN	963.9	0.4	4.37
HTR TC IN HTR 24,15.9 IN	845.2	1.4	-.07
HTR TC IN HTR 33,15.9 IN	885.1	1.5	1.42
HTR TC IN HTR 34,15.9 IN	856.2	3.7	0.34
HTR TC IN HTR 36,15.9 IN	849.8	7.1	0.10

Test 10, run 106 (continued)

INSTRUMENT	20-SEC AVG	STD DEV	NORMALIZED TEMP
HTR TC IN HTR 04,16.1 IN	873.2	0.4	0.98
HTR TC IN HTR 05,16.1 IN	926.5	1.7	2.97
HTR TC IN HTR 07,16.1 IN	920.5	1.8	2.75
HTR TC IN HTR 21,16.1 IN	845.3	0.5	-.07
HTR TC IN HTR 27,16.1 IN	848.3	1.1	0.05
HTR TC IN HTR 04,16.4 IN	869.6	0.4	0.84
HTR TC IN HTR 05,16.4 IN	934.7	2.6	3.28
HTR TC IN HTR 07,16.4 IN	919.8	2.1	2.72
HTR TC IN HTR 21,16.4 IN	845.2	0.4	-.07
HTR TC IN HTR 27,16.4 IN	848.1	3.9	0.04
HTR TC IN HTR 04,16.6 IN	877.0	0.5	1.12
HTR TC IN HTR 05,16.6 IN	956.6	1.0	4.10
HTR TC IN HTR 07,16.6 IN	909.6	1.2	2.34
HTR TC IN HTR 21,16.6 IN	845.6	0.6	-.06
HTR TC IN HTR 27,16.6 IN	847.6	6.7	0.02
HTR TC IN HTR 04,16.9 IN	873.8	0.5	1.00
HTR TC IN HTR 07,16.9 IN	913.2	1.4	2.48
HTR TC IN HTR 21,16.9 IN	844.9	3.1	-.08
HTR TC IN HTR 27,16.9 IN	849.4	22.1	0.09
HTR TC IN HTR 11,18AB IN	856.0	0.5	0.33
HTR TC IN HTR 12,18AB IN	849.0	0.5	0.07
HTR TC IN HTR 14,18AB IN	867.1	9.7	0.75
HTR TC IN HTR 30,18AB IN	871.1	14.4	0.90
HTR TC IN HTR 11,18BC IN	855.0	0.5	0.30
HTR TC IN HTR 12,18BC IN	851.2	0.6	0.15
HTR TC IN HTR 14,18BC IN	925.2	19.4	2.92
HTR TC IN HTR 17,18BC IN	950.2	0.6	3.86
HTR TC IN HTR 30,18BC IN	882.3	12.4	1.32
WIRE WRAP THERMOCOUPLES			
WW TC ON HTR 12,-1 IN(DEG F)	854.3	14.6	0.27
WW TC ON HTR 16,-1 IN	847.5	0.5	0.01
WW TC ON HTR 12,01 IN	848.0	0.6	0.03
WW TC ON HTR 16,09 IN	929.1	0.6	3.07
WW TC ON HTR 04,11 IN	862.9	0.5	0.59
WW TC ON HTR 05,11 IN	889.5	0.4	1.59
WW TC ON HTR 13,11 IN	859.5	0.6	0.47
WW TC ON HTR 17,11 IN	860.4	0.5	0.50
WW TC ON HTR 28,11 IN	853.6	0.4	0.24
WW TC ON HTR 31,11 IN	861.2	0.5	0.53
WW TC ON HTR 03,13 IN	861.8	7.1	0.55
WW TC ON HTR 13,13 IN	860.7	0.5	0.51
WW TC ON HTR 15,13 IN	894.3	0.5	1.77
WW TC ON HTR 17,13 IN	863.3	0.5	0.61
WW TC ON HTR 22,13 IN	850.5	0.5	0.13
WW TC ON HTR 01,15 IN	962.2	0.7	4.31
WW TC ON HTR 03,15 IN	875.2	0.6	1.05
WW TC ON HTR 08,15 IN	849.1	8.2	0.08
WW TC ON HTR 10,15 IN	849.2	0.4	0.08
WW TC ON HTR 15,15 IN	891.2	0.5	1.65
WW TC ON HTR 19,15 IN	867.6	0.5	0.77

Test 10, run 106 (continued)

INSTRUMENT	20-SEC AVG	STD DEV	NORMALIZED TEMP
WW TC ON HTR 25.15 IN	851.3	0.5	0.16
WW TC ON HTR 36.15 IN	850.8	9.0	0.14
WW TC ON HTR 01.17 IN	897.4	0.8	1.88
WW TC AJ HTR 02.17 IN	859.0	0.7	0.45
WW TC OP HTR 02.17 IN	867.2	0.6	0.75
WW TC ON HTR 08.17 IN	853.3	0.3	0.23
WW TC ON HTR 10.17 IN	850.6	0.4	0.13
WW TC ON HTR 11.17 IN	849.4	0.5	0.09
WW TC ON HTR 18.17 IN	878.0	0.4	1.16
WW TC ON HTR 19.17 IN	862.7	0.5	0.59
WW TC ON HTR 21.17 IN	851.1	0.4	0.15
WW TC ON HTR 22.17 IN	851.3	0.4	0.16
WW TC ON HTR 33.17 IN	861.2	0.5	0.53
WW TC ON HTR 37.17 IN	848.1	3.1	0.04
WW TC ON HTR 06.19 IN	1027.5	0.7	6.75
WW TC AJ HTR 07.19 IN	878.4	0.7	1.17
WW TC OP HTR 07.19 IN	896.4	0.8	1.94
WW TC ON HTR 09.19 IN	853.5	0.7	0.24
WW TC ON HTR 14.19 IN	855.6	0.5	0.32
WW TC ON HTR 18.19 IN	867.7	0.5	0.77
WW TC ON HTR 27.19 IN	854.3	0.4	0.27
WW TC ON HTR 30.19 IN	861.3	0.5	0.53
WW TC ON HTR 34.19 IN	861.0	5.5	0.52
WW TC ON HTR 36.19 IN	849.6	2.9	0.10
WW TC ON HTR 37.19 IN	848.7	4.4	0.06
WW TC ON HTR 05.21 IN	906.3	0.4	2.22
WW TC ON HTR 06.21 IN	1016.2	0.7	6.33
WW TC ON HTR 21.21 IN	850.8	0.3	0.14
WW TC ON HTR 24.21 IN	852.4	0.3	0.20
WW TC ON HTR 25.21 IN	852.0	0.5	0.18
WW TC ON HTR 27.21 IN	854.8	0.5	0.29
WW TC ON HTR 30.21 IN	884.2	0.5	1.39
WW TC ON HTR 33.21 IN	875.5	2.2	1.07
WW TC ON HTR 34.21 IN	851.4	2.3	0.16
WW TC ON HTR 04.23 IN	876.9	0.5	1.12
WW TC ON HTR 09.23 IN	850.2	0.4	0.12
WW TC ON HTR 14.23 IN	888.5	0.7	1.55
WW TC ON HTR 24.23 IN	852.5	0.3	0.20
WW TC ON HTR 28.23 IN	859.6	0.6	0.47
WW TC ON HTR 31.23 IN	873.0	0.7	0.97
WW TC ON ROD 01.25 IN	949.8	2.2	3.84
WW TC ON ROD 02.25 IN	872.8	7.6	0.96
WW TC ON ROD 05.25 IN	926.7	15.2	2.98
WW TC ON ROD 08.25 IN	850.6	3.3	0.13
WW TC ON ROD 14.25 IN	880.4	7.1	1.25
WW TC ON ROD 04.27 IN	867.8	5.4	0.77
WW TC ON ROD 07.27 IN	952.2	5.2	3.93
WW TC ON ROD 12.27 IN	860.0	13.4	0.48
WW TC ON ROD 16.27 IN	872.3	7.0	0.95
WW TC ON ROD 18.27 IN	876.4	2.1	1.10
WW TC ON ROD 03.29 IN	861.8	12.1	0.55
WW TC ON ROD 06.29 IN	925.4	6.4	2.93

Test 10, run 106 (continued)

INSTRUMENT	20-SEC AVG	STD DEV	NORMALIZED TEMP
WW TC ON ROD 10,29 IN	856.0	15.2	0.33
WW TC ON ROD 01,37 IN	907.6	11.1	2.26
WW TC ON ROD 02,37 IN	867.7	11.0	0.77
WW TC ON ROD 08,37 IN	854.8	10.9	0.29
WW TC ON ROD 14,37 IN	892.7	16.5	1.71
WW TC ON ROD 04,51 IN	884.8	17.5	1.41
WW TC ON ROD 07,51 IN	891.3	3.1	1.65
WW TC ON ROD 12,51 IN	871.5	8.8	0.92
WW TC ON ROD 16,51 IN	890.5	5.3	1.62
WW TC ON ROD 18,51 IN	872.0	6.3	0.93
WW TC ON ROD 03,63 IN	875.5	5.1	1.06
WW TC ON ROD 06,63 IN	892.3	2.0	1.69
WW TC ON ROD 10,63 IN	864.9	1.5	0.67
DUCT THERMOCOUPLES			
DUCT WALL TC,CH 38,19 IN(DEG F)	847.7	2.9	0.03
DUCT WALL TC,CH 53,19 IN	846.9	1.5	-.01
DUCT WALL TC,CH 28,21 IN	844.7	1.2	-.09
DUCT WALL TC,CH 43,21 IN	860.7	2.9	0.51
DUCT WALL TC,CH 44,21 IN	863.4	2.1	0.61
TEST SECTION HOUSING THERMOCOUPLES			
TS SHELL-BOT(DEG F)	849.1	2.6	
TS GUARD HTR-BOT	815.5	3.1	
TS HTR-BOT	762.2	6.9	
TS SHELL-LOW CTR	852.3	1.4	
TS GUARD HTR-LOW CTR	856.3	4.4	
TS HTR-LOW CTR	779.6	2.2	
TS SHELL-UP CTR	876.6	0.5	
TS GUARD HTR-UP CTR	882.5	5.2	
TS HTR-UP CTR	854.0	7.6	
TS SHELL-TOP	878.2	4.6	
TS GUARD HTR-TOP	882.4	14.2	
TS HTR-TOP	873.2	7.9	
REFERENCE BOX THERMOCOUPLES			
150 DEG REF BOX 1(DEG F)	149.5	6.9	
150 DEG REF BOX 2	149.6	6.3	
150 DEG REF BOX 3	153.5	8.0	
150 DEG REF BOX 4	151.3	7.8	
150 DEG REF BOX 5	147.6	2.2	
MISCELLANEOUS			
SOD PUMP SPEED(RPM)	677.9	38.9	
EXPANSION TANK LEVEL(% FULL)	74.3	0.5	

TEST SERIES 10(BUNDLE 3C); TEST 10 RUN 107 01/17/78 13 51 33

CONDITIONS:
TEST SECTION FLOW: 0.91 L/S (14.4 GPM)
TEST SECTION POWER
(1 ROD HEATED): 14.5 KW (27.1 KW/M/ROD)(8.3 KW/FT/ROD)

TEST SECTION INLET TEMPERATURE: 451 DEG C (845 DEG F)
TEST SECTION OUTLET TEMPERATURE: 466 DEG C (871 DEG F)

HEAT BALANCE:

HEAT INPUT FROM 31 FUEL PIN SIMULATORS: 14.5 KW
HEAT ABSORBED BY SODIUM=
FLOW X SP.HEAT X (TS OUT TEMP - TS IN TEMP) 14.4 KW
% OF INPUT HEAT ACCOUNTED FOR: 99.2 %

INSTRUMENT	20-SEC AVG	STD DEV
HEATER POWERS(KW)		
HTR POWER IN ROD 7	14.5	0.0
HTR POWER IN RODS 8,9,10	0.1	0.0
HTR POWER IN RODS 14,15,16	0.0	0.0
HTR POWER IN RODS 1,2,11,19	0.0	0.0
HTR POWER IN RODS 3,5,13,17	0.1	0.0
HTR POWER IN RODS 4,6,12,18	-0.0	0.0
HTR POWER IN RODS 30,31	-0.0	0.0
HTR POWER IN RODS 24,25,27,28	-0.3	0.0
HTR POWER IN RODS 33,34	-0.0	0.0
HTR POWER IN RODS 21,22,36,37	0.0	0.0
FLOWS		
TEST SECTION(TS) FLOW IN(GPM)	14.4	0.1
TS FLOW OUT(GPM)	14.4	0.1
TS BYPASS FLOW(GPM)	1.1	0.2
LOOP FLOW TOTAL(GPM)	14.4	0.1
RADIATOR AIR FLOW(CFM)	1.2	0.0
PRESSURES		
TS IN PRESS(PSIG)	14.9	0.1
TS OUT PRESS(PSIG)	6.0	0.0
PUMP OUT PRESS(PSIG)	10.2	0.0
TS LINE PRESS IN(PSIG)	13.8	0.1
EXP TANK ARGON PRESS(PSIG)	2.4	0.1
TS BYP LINE PRESS IN(PSIG)	15.1	0.1
TS BYP LINE PRESS OUT(PSIG)	9.4	0.1

Test 10, run 107 (continued)

INSTRUMENT	20-SEC AVG	STD DEV	NORMALIZED TEMP
LOOP THERMOCOUPLES			
TEST SECT INLET WELL(DEG F)	845.2	0.4	
TEST SECT OUTLET WELL(DEG F)	871.7	0.4	
PUMP IN PIPE WALL TC	860.0	4.7	
PUMP OUT PIPE WALL TC	837.6	1.1	
RAD IN PIPE WALL TC	864.0	0.8	
RAD OUT PIPE WALL TC	840.9	0.4	
HEATER INTERNAL THERMOCOUPLES			
HTR TC IN HTR 08,12AB IN(DEG F)	864.2	0.5	0.72
HTR TC IN HTR 13,12AB IN	845.2	0.5	0.00
HTR TC IN HTR 18,12AB IN	867.5	0.3	0.84
HTR TC IN HTR 22,12AB IN	844.5	0.4	-.03
HTR TC IN HTR 08,12BC IN	865.7	0.3	0.77
HTR TC IN HTR 13,12BC IN	845.1	0.8	-.00
HTR TC IN HTR 18,12BC IN	867.3	0.3	0.84
HTR TC IN HTR 22,12BC IN	844.3	0.9	-.03
HTR TC IN HTR 09,15AB IN	865.4	8.5	0.76
HTR TC IN HTR 10,15BC IN	850.3	0.5	0.19
HTR TC IN HTR 16,15BC IN	860.1	0.7	0.57
HTR TC IN HTR 25,15BC IN	843.0	1.1	-.08
HTR TC IN HTR 02,15.1 IN	954.9	1.8	4.14
HTR TC IN HTR 03,15.1 IN	883.8	0.6	1.46
HTR TC IN HTR 06,15.1 IN	957.6	3.5	4.24
HTR TC IN HTR 15,15.1 IN	861.7	0.5	0.62
HTR TC IN HTR 24,15.1 IN	843.7	0.4	-.06
HTR TC IN HTR 33,15.1 IN	865.4	0.4	0.76
HTR TC IN HTR 36,15.1 IN	862.7	0.6	0.66
HTR TC IN HTR 02,15.4 IN	934.2	6.4	3.36
HTR TC IN HTR 03,15.4 IN	889.4	1.1	1.67
HTR TC IN HTR 06,15.4 IN	956.3	2.7	4.19
HTR TC IN HTR 15,15.4 IN	875.2	0.5	1.13
HTR TC IN HTR 24,15.4 IN	844.0	0.4	-.04
HTR TC IN HTR 33,15.4 IN	866.2	0.5	0.79
HTR TC IN HTR 34,15.4 IN	757.7	44.6	****
HTR TC IN HTR 36,15.4 IN	861.9	0.4	0.63
HTR TC IN HTR 02,15.6 IN	930.8	1.9	3.23
HTR TC IN HTR 03,15.6 IN	885.8	0.8	1.53
HTR TC IN HTR 06,15.6 IN	953.5	3.3	4.09
HTR TC IN HTR 15,15.6 IN	874.4	0.6	1.11
HTR TC IN HTR 24,15.6 IN	844.1	0.4	-.04
HTR TC IN HTR 33,15.6 IN	864.0	0.8	0.71
HTR TC IN HTR 34,15.6 IN	913.0	11.1	2.56
HTR TC IN HTR 36,15.6 IN	858.1	0.4	0.49
HTR TC IN HTR 03,15.9 IN	866.2	4.8	0.79
HTR TC IN HTR 06,15.9 IN	948.9	4.0	3.91
HTR TC IN HTR 15,15.9 IN	861.4	0.5	0.61
HTR TC IN HTR 24,15.9 IN	843.5	0.6	-.06
HTR TC IN HTR 33,15.9 IN	865.6	0.6	0.77
HTR TC IN HTR 34,15.9 IN	891.9	1.3	1.76
HTR TC IN HTR 36,15.9 IN	859.0	2.0	0.52
HTR TC IN HTR 04,16.1 IN	865.1	0.4	0.75

Test 10, run 107 (continued)

INSTRUMENT	20-SEC AVG	STD DEV	NORMALIZED TEMP
HTR TC IN HTR 05,16.1 IN	880.3	0.9	1.32
HTR TC IN HTR 07,16.1 IN	1088.2	1.6	9.17
HTR TC IN HTR 21,16.1 IN	845.0	0.2	-.01
HTR TC IN HTR 27,16.1 IN	844.7	1.1	-.02
HTR TC IN HTR 04,16.4 IN	864.2	0.7	0.72
HTR TC IN HTR 05,16.4 IN	885.8	3.1	1.53
HTR TC IN HTR 07,16.4 IN	1086.3	1.8	9.10
HTR TC IN HTR 21,16.4 IN	845.9	0.7	0.03
HTR TC IN HTR 27,16.4 IN	843.9	0.9	-.05
HTR TC IN HTR 04,16.6 IN	864.4	0.5	0.73
HTR TC IN HTR 05,16.6 IN	894.5	1.7	1.86
HTR TC IN HTR 07,16.6 IN	1082.2	1.4	8.95
HTR TC IN HTR 21,16.6 IN	845.9	1.1	0.03
HTR TC IN HTR 27,16.6 IN	842.9	0.7	-.08
HTR TC IN HTR 04,16.9 IN	863.4	0.5	0.69
HTR TC IN HTR 07,16.9 IN	1084.7	1.4	9.04
HTR TC IN HTR 21,16.9 IN	844.3	1.6	-.03
HTR TC IN HTR 27,16.9 IN	842.0	0.5	-.12
HTR TC IN HTR 11,18AB IN	855.5	0.5	0.39
HTR TC IN HTR 12,18AB IN	845.0	0.8	-.01
HTR TC IN HTR 14,18AB IN	857.7	9.9	0.47
HTR TC IN HTR 30,18AB IN	845.2	7.4	0.00
HTR TC IN HTR 11,18BC IN	855.2	0.5	0.38
HTR TC IN HTR 12,18BC IN	846.3	1.1	0.04
HTR TC IN HTR 14,18BC IN	909.1	12.1	2.41
HTR TC IN HTR 17,18BC IN	969.6	1.0	4.70
HTR TC IN HTR 30,18BC IN	845.4	7.3	0.01
WIRE WRAP THERMOCOUPLES			
WW TC ON HTR 12,-1 IN(DEG F)	850.3	3.4	0.19
WW TC ON HTR 16,-1 IN	845.1	1.3	-.00
WW TC ON HTR 12,01 IN	846.4	0.4	0.05
WW TC ON HTR 16,09 IN	859.1	0.5	0.53
WW TC ON HTR 04,11 IN	858.2	0.4	0.49
WW TC ON HTR 05,11 IN	862.8	0.4	0.67
WW TC ON HTR 13,11 IN	850.2	0.6	0.19
WW TC ON HTR 17,11 IN	890.3	0.4	1.70
WW TC ON HTR 28,11 IN	848.0	0.5	0.11
WW TC ON HTR 31,11 IN	848.4	0.4	0.12
WW TC ON HTR 03,13 IN	871.9	0.7	1.01
WW TC ON HTR 13,13 IN	849.4	0.8	0.16
WW TC ON HTR 15,13 IN	851.0	0.5	0.22
WW TC ON HTR 17,13 IN	873.3	0.4	1.06
WW TC ON HTR 22,13 IN	848.4	0.4	0.12
WW TC ON HTR 01,15 IN	920.4	0.6	2.84
WW TC ON HTR 03,15 IN	877.1	0.5	1.21
WW TC ON HTR 08,15 IN	859.4	1.6	0.54
WW TC ON HTR 10,15 IN	850.0	0.7	0.18
WW TC ON HTR 15,15 IN	851.6	0.3	0.24
WW TC ON HTR 19,15 IN	963.9	0.3	4.48
WW TC ON HTR 25,15 IN	847.9	0.4	0.10
WW TC ON HTR 36,15 IN	861.8	1.2	0.63

Test 10, run 107 (continued)

INSTRUMENT	20-SEC AVG	STD DEV	NORMALIZED TEMP
WW TC ON HTR 01,17 IN	873.6	0.8	1.07
WW TC AJ HTR 02,17 IN	877.1	1.9	1.20
WW TC OP HTR 02,17 IN	895.7	2.6	1.91
WW TC ON HTR 08,17 IN	867.3	1.4	0.83
WW TC ON HTR 10,17 IN	849.7	0.8	0.17
WW TC ON HTR 11,17 IN	848.1	0.9	0.11
WW TC ON HTR 18,17 IN	974.9	0.5	4.90
WW TC ON HTR 19,17 IN	918.5	0.6	2.77
WW TC ON HTR 21,17 IN	850.7	0.4	0.21
WW TC ON HTR 22,17 IN	850.9	0.3	0.22
WW TC ON HTR 33,17 IN	854.8	0.8	0.36
WW TC ON HTR 37,17 IN	850.9	1.3	0.22
WW TC ON HTR C6,19 IN	915.1	1.0	2.64
WW TC AJ HTR 07,19 IN	1013.6	0.9	6.36
WW TC OP HTR 07,19 IN	1005.6	0.8	6.06
WW TC ON HTR 09,19 IN	861.4	0.6	0.61
WW TC ON HTR 14,19 IN	846.4	0.7	0.05
WW TC ON HTR 18,19 IN	963.5	0.5	4.47
WW TC ON HTR 27,19 IN	849.5	0.4	0.17
WW TC ON HTR 30,19 IN	847.9	0.5	0.10
WW TC ON HTR 34,19 IN	889.9	0.9	1.69
WW TC ON HTR 36,19 IN	861.4	0.7	0.61
WW TC ON HTR 37,19 IN	848.0	0.7	0.11
WW TC ON HTR 05,21 IN	873.6	0.4	1.07
WW TC ON HTR 06,21 IN	958.9	1.8	4.29
WW TC ON HTR 21,21 IN	849.7	0.4	0.17
WW TC ON HTR 24,21 IN	849.7	0.4	0.17
WW TC ON HTR 25,21 IN	848.9	0.5	0.14
WW TC ON HTR 27,21 IN	849.8	0.4	0.18
WW TC ON HTR 30,21 IN	851.7	0.4	0.25
WW TC ON HTR 33,21 IN	873.7	1.8	1.08
WW TC ON HTR 34,21 IN	864.3	0.8	0.72
WW TC ON HTR 04,23 IN	871.7	0.6	1.00
WW TC ON HTR C9,23 IN	857.3	0.8	0.46
WW TC ON HTR 14,23 IN	854.8	1.9	0.36
WW TC ON HTR 24,23 IN	850.7	0.3	0.21
WW TC ON HTR 28,23 IN	848.5	0.5	0.13
WW TC ON HTR 31,23 IN	864.6	1.1	0.73
WW TC ON ROD 01,25 IN	924.0	0.4	2.97
WW TC ON ROD 02,25 IN	940.9	0.4	3.61
WW TC ON ROD 05,25 IN	872.6	0.4	1.03
WW TC ON ROD C8,25 IN	858.1	0.3	0.49
WW TC ON ROD 14,25 IN	858.2	0.2	0.49
WW TC ON ROD 04,27 IN	853.8	0.4	0.32
WW TC ON ROD 07,27 IN	942.5	1.4	3.68
WW TC ON ROD 12,27 IN	851.8	0.9	0.25
WW TC ON ROD 16,27 IN	865.4	0.4	0.76
WW TC ON ROD 18,27 IN	887.2	0.2	1.59
WW TC ON ROD 03,29 IN	857.5	0.3	0.47
WW TC ON ROD 06,29 IN	885.0	0.4	1.51
WW TC ON ROD 10,29 IN	852.8	1.1	0.29
WW TC ON ROD 01,37 IN	913.0	0.4	2.56

Test 10, run 107 (continued)

INSTRUMENT	20-SEC AVG	STD DEV	NORMALIZED TEMP
WW TC ON ROD 02.37 IN	891.8	0.4	1.76
WW TC ON ROD 08.37 IN	859.2	0.3	0.53
WW TC ON ROD 14.37 IN	865.4	0.4	0.76
WW TC ON ROD 04.51 IN	869.7	0.3	0.93
WW TC ON ROD 07.51 IN	901.2	0.5	2.11
WW TC ON ROD 12.51 IN	860.2	0.4	0.57
WW TC ON ROD 16.51 IN	880.4	0.3	1.33
WW TC ON ROD 18.51 IN	882.9	0.3	1.42
WW TC ON ROD 03.63 IN	874.7	0.3	1.11
WW TC ON ROD 06.63 IN	884.7	0.1	1.49
WW TC ON ROD 10.63 IN	864.0	0.2	0.71
DUCT THERMOCOUPLES			
DUCT WALL TC.CH 38.19 IN(DEG F)	844.3	0.8	-.03
DUCT WALL TC.CH 53.19 IN	852.4	0.3	0.27
DUCT WALL TC.CH 28.21 IN	844.7	0.4	-.02
DUCT WALL TC.CH 43.21 IN	847.0	0.7	0.07
DUCT WALL TC.CH 44.21 IN	849.4	0.4	0.16
TEST SECTION HOUSING THERMOCOUPLES			
TS SHELL-BOT(DEG F)	846.9	0.7	
TS GUARD HTR-BOT	814.2	0.4	
TS HTR-BOT	760.7	0.6	
TS SHELL-LOW CTR	850.1	0.3	
TS GUARD HTR-LOW CTR	853.3	0.9	
TS HTR-LOW CTR	779.0	0.7	
TS SHELL-UP CTR	872.0	0.6	
TS GUARD HTR-UP CTR	880.4	0.8	
TS HTR-UP CTR	852.6	0.9	
TS SHELL-TOP	871.6	1.0	
TS GUARD HTR-TOP	875.2	1.3	
TS HTR-TOP	871.1	1.3	
REFERENCE BOX THERMOCOUPLES			
150 DEG REF BOX 1(DEG F)	148.3	1.4	
150 DEG REF BOX 2	149.0	0.7	
150 DEG REF BOX 3	151.7	0.8	
150 DEG REF BOX 4	149.5	0.4	
150 DEG REF BOX 5	146.3	0.3	
MISCELLANEOUS			
SOD PUMP SPEED(RPM)	678.9	11.3	
EXPANSION TANK LEVEL(% FULL)	74.5	0.2	

TEST SERIES 10(BUNDLE 3C); TEST 10 RUN 108 01/17/78 14 21 30

CONDITIONS:

TEST SECTION FLOW: 0.91 L/S (14.4 GPM)

TEST SECTION POWER
(1 ROD HEATED): 14.4 KW (27.0 KW/M/ROD)(8.2 KW/FT/ROD)

TEST SECTION INLET TEMPERATURE: 451 DEG C (844 DEG F)

TEST SECTION OUTLET TEMPERATURE: 466 DEG C (871 DEG F)

HEAT BALANCE:

HEAT INPUT FROM 31 FUEL PIN SIMULATORS: 14.4 KW

HEAT ABSORBED BY SODIUM=
FLOW X SP.HEAT X (TS OUT TEMP - TS IN TEMP) 14.4 KW

% OF INPUT HEAT ACCOUNTED FOR: 99.6 %

INSTRUMENT	20-SEC AVG	STD DEV
HEATER POWERS(KW)		
HTR POWER IN ROD 8	14.4	0.0
HTR POWER IN RODS 2,9,10	0.1	0.0
HTR POWER IN RODS 14,15,16	-0.0	0.0
HTR POWER IN RODS 1,3,11,19	-0.0	0.0
HTR POWER IN RODS 5,6,13,17	0.1	0.0
HTR POWER IN RODS 4,7,12,18	-0.0	0.0
HTR POWER IN RODS 30,31	-0.0	0.0
HTR POWER IN RODS 24,25,27,28	-0.4	0.0
HTR POWER IN RODS 33,34	-0.0	0.0
HTR POWER IN RODS 21,22,36,37	0.0	0.0
FLOWS		
TEST SECTION(TS) FLOW IN(GPM)	14.4	0.1
TS FLOW OUT(GPM)	14.5	0.1
TS BYPASS FLOW(GPM)	1.7	0.2
LOOP FLOW TOTAL(GPM)	14.5	0.1
RADIATOR AIR FLOW(CFM)	1.1	0.0
PRESSURES		
TS IN PRESS(PSIG)	14.9	0.1
TS OUT PRESS(PSIG)	6.0	0.0
PUMP OUT PRESS(PSIG)	10.2	0.1
TS LINE PRESS IN(PSIG)	13.9	0.1
EXP TANK ARGON PRESS(PSIG)	2.3	0.1
TS BYP LINE PRESS IN(PSIG)	15.1	0.1
TS BYP LINE PRESS OUT(PSIG)	9.3	0.1

Test 10, run 108 (continued)

INSTRUMENT	20-SEC AVG	STD DEV	NORMALIZED TEMP
LOOP THERMOCOUPLES			
TEST SECT INLET WELL(DEG F)	845.0	0.2	
TEST SECT OUTLET WELL(DEG F)	871.4	0.3	
PUMP IN PIPE WALL TC	859.3	4.2	
PUMP OUT PIPE WALL TC	837.1	1.1	
RAD IN PIPE WALL TC	863.1	0.8	
RAD OUT PIPE WALL TC	840.2	0.5	
HEATER INTERNAL THERMOCOUPLES			
HTR TC IN HTR 08,12AB IN(DEG F)	1046.0	0.4	7.62
HTR TC IN HTR 13,12AB IN	844.7	0.4	-.01
HTR TC IN HTR 18,12AB IN	861.9	0.4	0.64
HTR TC IN HTR 22,12AB IN	834.7	4.7	-.39
HTR TC IN HTR 08,12BC IN	1038.0	0.4	7.32
HTR TC IN HTR 13,12BC IN	843.9	0.5	-.04
HTR TC IN HTR 18,12BC IN	860.7	0.2	0.60
HTR TC IN HTR 22,12BC IN	854.6	0.9	0.36
HTR TC IN HTR 09,15AB IN	892.4	8.6	1.80
HTR TC IN HTR 10,15BC IN	850.7	0.3	0.22
HTR TC IN HTR 16,15BC IN	843.3	0.4	-.06
HTR TC IN HTR 25,15BC IN	841.7	1.2	-.12
HTR TC IN HTR 02,15.1 IN	877.4	0.5	1.23
HTR TC IN HTR 03,15.1 IN	862.4	0.6	0.66
HTR TC IN HTR 06,15.1 IN	853.0	0.5	0.30
HTR TC IN HTR 15,15.1 IN	844.0	0.4	-.04
HTR TC IN HTR 24,15.1 IN	843.0	0.4	-.07
HTR TC IN HTR 33,15.1 IN	846.8	0.3	0.07
HTR TC IN HTR 36,15.1 IN	891.4	0.6	1.76
HTR TC IN HTR 02,15.4 IN	871.3	0.3	1.00
HTR TC IN HTR 03,15.4 IN	858.0	0.4	0.49
HTR TC IN HTR 06,15.4 IN	853.5	0.5	0.32
HTR TC IN HTR 15,15.4 IN	843.7	0.5	-.05
HTR TC IN HTR 24,15.4 IN	844.3	0.3	-.03
HTR TC IN HTR 33,15.4 IN	846.7	0.3	0.07
HTR TC IN HTR 34,15.4 IN	1032.9	15.3	7.13
HTR TC IN HTR 36,15.4 IN	890.2	0.8	1.72
HTR TC IN HTR 02,15.6 IN	868.7	0.5	0.90
HTR TC IN HTR 03,15.6 IN	856.0	0.5	0.42
HTR TC IN HTR 06,15.6 IN	855.5	0.4	0.40
HTR TC IN HTR 15,15.6 IN	844.3	0.4	-.03
HTR TC IN HTR 24,15.6 IN	844.1	0.5	-.03
HTR TC IN HTR 33,15.6 IN	847.1	0.4	0.08
HTR TC IN HTR 34,15.6 IN	837.2	6.5	-.29
HTR TC IN HTR 36,15.6 IN	899.1	1.3	2.05
HTR TC IN HTR 03,15.9 IN	854.7	4.2	0.37
HTR TC IN HTR 06,15.9 IN	855.1	0.7	0.38
HTR TC IN HTR 15,15.9 IN	843.4	0.3	-.06
HTR TC IN HTR 24,15.9 IN	844.2	0.6	-.03
HTR TC IN HTR 33,15.9 IN	844.2	0.3	-.03
HTR TC IN HTR 34,15.9 IN	858.4	0.4	0.51
HTR TC IN HTR 36,15.9 IN	895.5	2.1	1.91

Test 10, run 108 (continued)

INSTRUMENT	20-SEC AVG	STD DEV	NORMALIZED TEMP
HTR TC IN HTR 04,16,1 IN	849.9	0.6	0.19
HTR TC IN HTR 05,16,1 IN	848.6	0.4	0.14
HTR TC IN HTR 07,16,1 IN	874.5	0.4	1.12
HTR TC IN HTR 21,16,1 IN	901.7	1.0	2.15
HTR TC IN HTR 27,16,1 IN	843.6	1.2	-.05
HTR TC IN HTR 04,16,4 IN	848.8	0.6	0.14
HTR TC IN HTR 05,16,4 IN	847.5	1.2	0.09
HTR TC IN HTR 07,16,4 IN	874.7	0.9	1.13
HTR TC IN HTR 21,16,4 IN	903.8	1.0	2.23
HTR TC IN HTR 27,16,4 IN	843.9	0.7	-.04
HTR TC IN HTR 04,16,6 IN	850.1	0.4	0.20
HTR TC IN HTR 05,16,6 IN	849.2	0.5	0.16
HTR TC IN HTR 07,16,6 IN	870.9	0.7	0.98
HTR TC IN HTR 21,16,6 IN	919.9	0.6	2.84
HTR TC IN HTR 27,16,6 IN	843.4	0.6	-.06
HTR TC IN HTR C4,16,9 IN	848.1	0.5	0.12
HTR TC IN HTR 07,16,9 IN	872.1	0.8	1.03
HTR TC IN HTR 21,16,9 IN	916.2	0.9	2.70
HTR TC IN HTR 27,16,9 IN	844.0	0.4	-.04
HTR TC IN HTR 11,18AB IN	849.2	0.4	0.16
HTR TC IN HTR 12,18AB IN	844.5	0.6	-.02
HTR TC IN HTR 14,18AB IN	856.9	9.8	0.45
HTR TC IN HTR 30,18AB IN	837.4	7.3	-.29
HTR TC IN HTR 11,18BC IN	848.0	0.5	0.11
HTR TC IN HTR 12,18BC IN	842.4	0.7	-.10
HTR TC IN HTR 14,18BC IN	961.2	9.7	4.41
HTR TC IN HTR 17,18BC IN	854.0	0.3	0.34
HTR TC IN HTR 30,18BC IN	835.5	7.1	-.36
WIRE WRAP THERMOCOUPLES			
WW TC ON HTR 12,-1 IN(DEG F)	846.6	3.6	0.06
WW TC ON HTR 16,-1 IN	846.9	0.7	0.07
WW TC ON HTR 12,01 IN	846.7	7.8	0.07
WW TC ON HTR 16,09 IN	847.3	0.4	0.09
WW TC ON HTR 04,11 IN	849.8	0.6	0.18
WW TC ON HTR 05,11 IN	847.1	0.4	0.08
WW TC ON HTR 13,11 IN	846.4	0.5	0.06
WW TC ON HTR 17,11 IN	850.1	0.4	0.20
WW TC ON HTR 28,11 IN	848.9	0.4	0.15
WW TC ON HTR 31,11 IN	844.9	0.2	-.00
WW TC ON HTR 03,13 IN	853.3	0.7	0.31
WW TC ON HTR 13,13 IN	846.1	0.5	0.04
WW TC ON HTR 15,13 IN	846.0	0.5	0.04
WW TC ON HTR 17,13 IN	849.1	0.3	0.16
WW TC ON HTR 22,13 IN	862.2	0.6	0.65
WW TC ON HTR 01,15 IN	857.2	0.5	0.46
WW TC ON HTR 03,15 IN	854.9	0.4	0.38
WW TC ON HTR 08,15 IN	1008.2	1.0	6.19
WW TC ON HTR 10,15 IN	850.8	0.2	0.22
WW TC ON HTR 15,15 IN	846.5	0.4	0.06
WW TC ON HTR 19,15 IN	890.2	0.4	1.72

Test 10, run 108 (continued)

INSTRUMENT	20-SEC AVG	STD DEV	NORMALIZED TEMP
WW TC ON HTR 25,15 IN	848.2	0.3	0.12
WW TC ON HTR 36,15 IN	873.6	1.0	1.09
WW TC ON HTR 01,17 IN	850.9	0.5	0.22
WW TC AJ HTR 02,17 IN	915.2	0.9	2.66
WW TC OP HTR 02,17 IN	892.9	0.7	1.82
WW TC ON HTR 08,17 IN	1003.5	0.2	6.01
WW TC ON HTR 10,17 IN	849.0	0.4	0.15
WW TC ON HTR 11,17 IN	847.0	0.7	0.08
WW TC ON HTR 18,17 IN	870.1	0.5	0.95
WW TC ON HTR 19,17 IN	939.9	0.8	3.60
WW TC ON HTR 21,17 IN	896.1	0.9	1.94
WW TC ON HTR 22,17 IN	856.2	0.6	0.43
WW TC ON HTR 33,17 IN	850.9	0.5	0.23
WW TC ON HTR 37,17 IN	922.3	1.3	2.93
WW TC ON HTR 06,19 IN	857.1	0.5	0.46
WW TC AJ HTR 07,19 IN	910.0	0.8	2.47
WW TC OP HTR 07,19 IN	895.7	0.5	1.92
WW TC ON HTR 09,19 IN	889.2	0.6	1.68
WW TC ON HTR 14,19 IN	847.5	0.3	0.09
WW TC ON HTR 18,19 IN	887.7	0.4	1.62
WW TC ON HTR 27,19 IN	850.8	0.2	0.22
WW TC ON HTR 30,19 IN	846.2	0.5	0.05
WW TC ON HTR 34,19 IN	856.4	0.9	0.43
WW TC ON HTR 36,19 IN	911.4	0.6	2.52
WW TC ON HTR 37,19 IN	894.2	0.8	1.87
WW TC ON HTR 05,21 IN	851.1	0.4	0.23
WW TC ON HTR 06,21 IN	862.0	0.5	0.64
WW TC ON HTR 21,21 IN	860.7	0.4	0.59
WW TC ON HTR 24,21 IN	851.7	0.3	0.25
WW TC ON HTR 25,21 IN	850.0	0.5	0.19
WW TC ON HTR 27,21 IN	850.6	0.4	0.21
WW TC ON HTR 30,21 IN	846.3	0.5	0.05
WW TC ON HTR 33,21 IN	855.1	1.1	0.38
WW TC ON HTR 34,21 IN	880.3	1.0	1.34
WW TC ON HTR 04,23 IN	857.7	0.5	0.48
WW TC ON HTR 09,23 IN	935.6	0.7	3.44
WW TC ON HTR 14,23 IN	847.8	0.8	0.11
WW TC ON HTR 24,23 IN	852.5	0.2	0.28
WW TC ON HTR 28,23 IN	846.9	0.6	0.07
WW TC ON HTR 31,23 IN	854.9	0.7	0.37
WW TC ON ROD 01,25 IN	861.4	0.3	0.62
WW TC ON ROD 02,25 IN	918.1	0.4	2.77
WW TC ON ROD 05,25 IN	853.4	0.2	0.32
WW TC ON ROD 08,25 IN	915.0	0.4	2.65
WW TC ON ROD 14,25 IN	851.2	0.4	0.23
WW TC ON ROD 04,27 IN	848.3	0.2	0.12
WW TC ON ROD 07,27 IN	866.7	1.3	0.83
WW TC ON ROD 12,27 IN	850.8	0.9	0.22
WW TC ON ROD 16,27 IN	860.5	0.4	0.59
WW TC ON ROD 18,27 IN	877.0	0.4	1.22
WW TC ON ROD 03,29 IN	853.2	0.2	0.31
WW TC ON ROD 06,29 IN	854.1	0.1	0.35

Test 10, run 108 (continued)

INSTRUMENT	20-SEC AVG	STD DEV	NORMALIZED TEMP
WW TC ON ROD 10.29 IN	854.5	1.0	0.36
WW TC ON ROD 01.37 IN	878.5	0.4	1.27
WW TC ON ROD 02.37 IN	913.5	0.3	2.60
WW TC ON ROD 08.37 IN	902.9	0.1	2.19
WW TC ON ROD 14.37 IN	854.2	0.3	0.35
WW TC ON ROD 04.51 IN	856.8	0.4	0.45
WW TC ON ROD 07.51 IN	883.2	0.4	1.45
WW TC ON ROD 12.51 IN	856.6	0.2	0.44
WW TC ON ROD 16.51 IN	867.4	0.2	0.85
WW TC ON ROD 18.51 IN	886.9	0.4	1.59
WW TC ON ROD 03.63 IN	868.9	0.3	0.91
WW TC ON ROD 06.63 IN	867.8	0.4	0.87
WW TC ON ROD 10.63 IN	863.6	0.4	0.70
DUCT THERMOCOUPLES			
DUCT WALL TC.CH 38.19 IN(DEG F)	845.0	0.9	-.00
DUCT WALL TC.CH 53.19 IN	888.0	0.2	1.63
DUCT WALL TC.CH 28.21 IN	889.6	0.3	1.69
DUCT WALL TC.CH 43.21 IN	845.4	0.8	0.01
DUCT WALL TC.CH 44.21 IN	848.1	0.5	0.12
TEST SECTION HOUSING THERMOCOUPLES			
TS SHELL-BOT(DEG F)	846.1	0.7	
TS GUARD HTR-BOT	813.5	0.3	
TS HTR-BOT	760.5	0.5	
TS SHELL-LOW CTR	861.8	0.6	
TS GUARD HTR-LOW CTR	859.4	1.0	
TS HTR-LOW CTR	781.3	0.6	
TS SHELL-UP CTR	873.6	0.5	
TS GUARD HTR-UP CTR	881.1	0.8	
TS HTR-UP CTR	853.0	0.8	
TS SHELL-TOP	866.8	0.7	
TS GUARD HTR-TOP	872.4	1.4	
TS HTR-TOP	871.0	1.0	
REFERENCE BOX THERMOCOUPLES			
150 DEG REF BOX 1(DEG F)	147.8	1.2	
150 DEG REF BOX 2	148.6	0.7	
150 DEG REF BOX 3	151.6	0.7	
150 DEG REF BOX 4	149.5	0.4	
150 DEG REF BOX 5	147.1	0.2	
MISCELLANEOUS			
SOD PUMP SPEED(RPM)	682.6	12.2	
EXPANSION TANK LEVEL(% FULL)	74.5	0.2	

TEST SERIES 10(BUNDLE 3C); TEST 10 RUN 109 01/16/78 10 27 59

CONDITIONS:
TEST SECTION FLOW: 0.89 L/S (14.1 GPM)
TEST SECTION POWER
(1 ROD HEATED): 14.5 KW (27.2 KW/M/ROD)(8.3 KW/FT/ROD)

TEST SECTION INLET TEMPERATURE: 443 DEG C (829 DEG F)
TEST SECTION OUTLET TEMPERATURE: 457 DEG C (855 DEG F)

HEAT BALANCE:

HEAT INPUT FROM 31 FUEL PIN SIMULATORS: 14.5 KW
HEAT ABSORBED BY SODIUM=
FLOW X SP.HEAT X (TS OUT TEMP - TS IN TEMP) 14.0 KW
% OF INPUT HEAT ACCOUNTED FOR: 96.3 %

INSTRUMENT	20-SEC AVG	STD DEV
HEATER POWERS(KW)		
HTR POWER IN ROD 9	14.5	0.0
HTR POWER IN RODS 2,8,10	0.1	0.0
HTR POWER IN RODS 14,15,16	0.0	0.0
HTR POWER IN RODS 1,3,11,19	0.0	0.0
HTR POWER IN RODS 5,6,13,17	0.1	0.0
HTR POWER IN RODS 4,7,12,18	0.0	0.0
HTR POWER IN RODS 30,31	0.0	0.0
HTR POWER IN RODS 24,25,27,28	-0.3	0.0
HTR POWER IN RODS 33,34	-0.0	0.0
HTR POWER IN RODS 21,22,36,37	0.0	0.0
FLOWS		
TEST SECTION(TS) FLOW IN(GPM)	14.1	0.1
TS FLOW OUT(GPM)	13.9	0.1
TS BYPASS FLOW(GPM)	0.0	0.1
LOOP FLOW TOTAL(GPM)	14.3	0.2
RADIATOR AIR FLOW(CFM)	1.2	0.0
PRESSURES		
TS IN PRESS(PSIG)	15.5	0.1
TS OUT PRESS(PSIG)	6.2	0.1
PUMP OUT PRESS(PSIG)	10.6	0.0
TS LINE PRESS IN(PSIG)	14.3	0.1
EXP TANK ARGON PRESS(PSIG)	2.9	0.1
TS BYP LINE PRESS IN(PSIG)	15.5	0.1
TS BYP LINE PRESS OUT(PSIG)	9.9	0.1

Test 10, run 109 (continued)

INSTRUMENT	20-SEC AVG	STD DEV	NORMALIZED TEMP
LOOP THERMOCOUPLES			
TEST SECT INLET WELL(DEG F)	829.6	0.4	
TEST SECT OUTLET WELL(DEG F)	855.8	0.4	
PUMP IN PIPE WALL TC	841.9	4.7	
PUMP OUT PIPE WALL TC	820.1	1.2	
RAD IN PIPE WALL TC	846.6	0.2	
RAD OUT PIPE WALL TC	826.0	0.4	
HEATER INTERNAL THERMOCOUPLES			
HTR TC IN HTR 08,12AB IN(DEG F)	881.6	0.5	1.98
HTR TC IN HTR 13,12AB IN	841.1	8.0	0.44
HTR TC IN HTR 18,12AB IN	829.4	0.3	-.01
HTR TC IN HTR 22,12AB IN	926.8	0.3	3.70
HTR TC IN HTR 08,12BC IN	884.3	0.5	2.08
HTR TC IN HTR 13,12BC IN	829.6	0.5	-.00
HTR TC IN HTR 18,12BC IN	829.3	0.3	-.01
HTR TC IN HTR 22,12BC IN	925.4	1.1	3.65
HTR TC IN HTR 09,15AB IN	1040.4	1.4	8.03
HTR TC IN HTR 10,15BC IN	918.7	0.8	3.40
HTR TC IN HTR 16,15BC IN	828.4	0.6	-.04
HTR TC IN HTR 25,15BC IN	828.6	0.8	-.04
HTR TC IN HTR 02,15.1 IN	859.8	0.4	1.15
HTR TC IN HTR 03,15.1 IN	870.8	0.6	1.57
HTR TC IN HTR 06,15.1 IN	836.7	0.5	0.27
HTR TC IN HTR 15,15.1 IN	828.6	0.4	-.04
HTR TC IN HTR 24,15.1 IN	78.4	0.4	****
HTR TC IN HTR 33,15.1 IN	828.6	0.3	-.04
HTR TC IN HTR 36,15.1 IN	833.3	1.0	0.14
HTR TC IN HTR 02,15.4 IN	850.5	1.1	0.79
HTR TC IN HTR 03,15.4 IN	850.2	1.0	0.79
HTR TC IN HTR 06,15.4 IN	835.3	0.5	0.22
HTR TC IN HTR 15,15.4 IN	829.8	0.4	0.01
HTR TC IN HTR 24,15.4 IN	422.3	0.6	****
HTR TC IN HTR 33,15.4 IN	828.8	0.4	-.03
HTR TC IN HTR 34,15.4 IN	776.3	74.5	****
HTR TC IN HTR 36,15.4 IN	834.4	0.7	0.18
HTR TC IN HTR 02,15.6 IN	856.6	0.3	1.03
HTR TC IN HTR 03,15.6 IN	844.4	0.7	0.56
HTR TC IN HTR 06,15.6 IN	836.7	0.2	0.27
HTR TC IN HTR 15,15.6 IN	828.4	0.5	-.05
HTR TC IN HTR 24,15.6 IN	833.3	0.9	0.14
HTR TC IN HTR 33,15.6 IN	828.2	0.6	-.06
HTR TC IN HTR 34,15.6 IN	850.7	7.7	0.80
HTR TC IN HTR 36,15.6 IN	837.2	0.4	0.29
HTR TC IN HTR 03,15.9 IN	842.9	1.4	0.51
HTR TC IN HTR 06,15.9 IN	835.9	0.3	0.24
HTR TC IN HTR 15,15.9 IN	827.8	0.4	-.07
HTR TC IN HTR 24,15.9 IN	833.0	0.7	0.13
HTR TC IN HTR 33,15.9 IN	826.9	0.3	-.10
HTR TC IN HTR 34,15.9 IN	826.1	2.0	-.13
HTR TC IN HTR 36,15.9 IN	839.5	1.7	0.38
HTR TC IN HTR 04,16.1 IN	844.8	0.9	0.58

Test 10, run 109 (continued)

INSTRUMENT	20-SEC AVG	STD DEV	NORMALIZED TEMP
HTR TC IN HTR 05,16.1 IN	834.0	0.4	0.17
HTR TC IN HTR 07,16.1 IN	845.1	0.9	0.59
HTR TC IN HTR 21,16.1 IN	884.4	0.7	2.09
HTR TC IN HTR 27,16.1 IN	827.7	1.2	-.07
HTR TC IN HTR 04,16.4 IN	844.0	1.0	0.55
HTR TC IN HTR 05,16.4 IN	833.3	0.7	0.14
HTR TC IN HTR 07,16.4 IN	846.8	1.2	0.65
HTR TC IN HTR 21,16.4 IN	876.6	0.6	1.79
HTR TC IN HTR 27,16.4 IN	828.0	0.7	-.06
HTR TC IN HTR 04,16.6 IN	837.0	0.9	0.28
HTR TC IN HTR 05,16.6 IN	834.6	0.4	0.19
HTR TC IN HTR 07,16.6 IN	846.8	0.5	0.65
HTR TC IN HTR 21,16.6 IN	930.9	1.1	3.86
HTR TC IN HTR 27,16.6 IN	826.4	0.6	-.12
HTR TC IN HTR 04,16.9 IN	838.3	0.4	0.33
HTR TC IN HTR 07,16.9 IN	849.1	0.7	0.74
HTR TC IN HTR 21,16.9 IN	930.2	1.9	3.83
HTR TC IN HTR 27,16.9 IN	825.5	0.5	-.16
HTR TC IN HTR 11,18AB IN	855.1	0.7	0.97
HTR TC IN HTR 12,18AB IN	829.0	0.6	-.02
HTR TC IN HTR 14,18AB IN	832.7	1.7	0.12
HTR TC IN HTR 30,18AB IN	830.1	7.4	0.02
HTR TC IN HTR 11,18BC IN	855.8	0.4	1.00
HTR TC IN HTR 12,18BC IN	831.6	0.3	0.08
HTR TC IN HTR 14,18BC IN	811.4	7.1	-.69
HTR TC IN HTR 17,18BC IN	830.9	0.1	0.05
HTR TC IN HTR 30,18BC IN	828.1	7.4	-.06
WIRE WRAP THERMOCOUPLES			
WW TC ON HTR 12,-1 IN(DEG F)	831.7	3.1	0.08
WW TC ON HTR 16,-1 IN	831.7	0.5	0.08
WW TC ON HTR 12,01 IN	830.9	0.3	0.05
WW TC ON HTR 16,09 IN	831.3	0.5	0.07
WW TC ON HTR 04,11 IN	839.3	0.4	0.37
WW TC ON HTR 05,11 IN	832.8	0.4	0.12
WW TC ON HTR 13,11 IN	831.5	0.4	0.07
WW TC ON HTR 17,11 IN	830.8	0.3	0.04
WW TC ON HTR 28,11 IN	832.7	0.6	0.12
WW TC ON HTR 31,11 IN	829.6	0.4	-.00
WW TC ON HTR 03,13 IN	854.5	2.1	0.95
WW TC ON HTR 13,13 IN	831.7	0.2	0.08
WW TC ON HTR 15,13 IN	830.9	0.4	0.05
WW TC ON HTR 17,13 IN	830.6	0.5	0.04
WW TC ON HTR 22,13 IN	896.7	0.5	2.56
WW TC ON HTR 01,15 IN	841.6	0.5	0.46
WW TC ON HTR 03,15 IN	843.3	1.6	0.52
WW TC ON HTR 08,15 IN	880.1	1.1	1.93
WW TC ON HTR 10,15 IN	878.3	0.3	1.85
WW TC ON HTR 15,15 IN	831.1	0.4	0.06
WW TC ON HTR 19,15 IN	851.5	0.4	0.83
WW TC ON HTR 25,15 IN	831.7	0.2	0.08

Test 10, run 109 (continued)

INSTRUMENT	20-SEC AVG	STD DEV	NORMALIZED TEMP
WW TC ON HTR 36,15 IN	832.5	1.1	0.11
WW TC ON HTR 01,17 IN	840.9	0.7	0.43
WW TC AJ HTR 02,17 IN	935.1	1.1	4.02
WW TC OP HTR 02,17 IN	902.0	1.4	2.76
WW TC ON HTR 08,17 IN	913.4	0.6	3.19
WW TC ON HTR 10,17 IN	856.3	0.4	1.02
WW TC ON HTR 11,17 IN	833.1	0.5	0.13
WW TC ON HTR 18,17 IN	838.3	0.3	0.33
WW TC ON HTR 19,17 IN	866.3	0.5	1.40
WW TC ON HTR 21,17 IN	952.4	0.4	4.68
WW TC ON HTR 22,17 IN	906.5	0.4	2.93
WW TC ON HTR 33,17 IN	831.7	0.4	0.08
WW TC ON HTR 37,17 IN	858.9	1.2	1.12
WW TC ON HTR 06,19 IN	838.2	0.5	0.33
WW TC AJ HTR 07,19 IN	864.7	0.5	1.34
WW TC OP HTR 07,19 IN	860.7	0.6	1.19
WW TC ON HTR 09,19 IN	1018.9	0.4	7.21
WW TC ON HTR 14,19 IN	830.8	0.6	0.05
WW TC ON HTR 18,19 IN	842.5	0.5	0.49
WW TC ON HTR 27,19 IN	833.7	0.4	0.16
WW TC ON HTR 30,19 IN	830.2	0.4	0.02
WW TC ON HTR 34,19 IN	827.6	1.0	-.08
WW TC ON HTR 36,19 IN	845.5	0.9	0.61
WW TC ON HTR 37,19 IN	862.5	0.8	1.25
WW TC ON HTR 05,21 IN	838.1	0.4	0.32
WW TC ON HTR 06,21 IN	842.0	0.5	0.47
WW TC ON HTR 21,21 IN	886.1	0.8	2.15
WW TC ON HTR 24,21 IN	838.0	0.4	0.32
WW TC ON HTR 25,21 IN	835.4	0.5	0.22
WW TC ON HTR 27,21 IN	834.1	0.4	0.17
WW TC ON HTR 30,21 IN	830.1	0.4	0.02
WW TC ON HTR 33,21 IN	831.4	1.2	0.07
WW TC ON HTR 34,21 IN	836.9	0.9	0.28
WW TC ON HTR 04,23 IN	859.2	0.6	1.13
WW TC ON HTR 09,23 IN	974.8	0.4	5.53
WW TC ON HTR 14,23 IN	829.4	0.4	-.01
WW TC ON HTR 24,23 IN	845.0	0.1	0.59
WW TC ON HTR 28,23 IN	829.9	0.4	0.01
WW TC ON HTR 31,23 IN	830.8	0.4	0.05
WW TC ON ROD 01,25 IN	841.7	0.2	0.46
WW TC ON ROD 02,25 IN	864.9	0.2	1.35
WW TC ON ROD 05,25 IN	837.6	0.2	0.31
WW TC ON ROD 08,25 IN	873.6	0.4	1.68
WW TC ON ROD 14,25 IN	831.8	0.1	0.08
WW TC ON ROD 04,27 IN	833.5	0.3	0.15
WW TC ON ROD 07,27 IN	841.8	1.4	0.47
WW TC ON ROD 12,27 IN	833.8	0.8	0.16
WW TC ON ROD 16,27 IN	834.3	0.2	0.18
WW TC ON ROD 18,27 IN	841.3	0.4	0.44
WW TC ON ROD 03,29 IN	848.7	0.4	0.73
WW TC ON ROD 06,29 IN	837.6	0.1	0.30
WW TC ON ROD 10,29 IN	848.4	1.1	0.72

Test 10, run 109 (continued)

INSTRUMENT	20-SEC AVG	STD DEV	NORMALIZED TEMP
WW TC ON ROD 01,37 IN	855.1	0.3	0.97
WW TC ON ROD 02,37 IN	885.6	0.3	2.13
WW TC ON ROD 08,37 IN	890.5	0.1	2.32
WW TC ON ROD 14,37 IN	835.1	0.1	0.21
WW TC ON ROD 04,51 IN	840.9	0.2	0.43
WW TC ON ROD 07,51 IN	855.3	0.6	0.98
WW TC ON ROD 12,51 IN	840.0	0.2	0.40
WW TC ON ROD 16,51 IN	842.1	0.4	0.47
WW TC ON ROD 18,51 IN	856.7	0.3	1.03
WW TC ON ROD 03,63 IN	856.6	0.2	1.03
WW TC ON ROD 06,63 IN	844.3	0.2	0.56
WW TC ON ROD 10,63 IN	854.2	0.2	0.94
DUCT THERMOCOUPLES			
DUCT WALL TC,CH 38,19 IN(DEG F)	827.9	0.6	-.07
DUCT WALL TC,CH 53,19 IN	839.4	0.3	0.37
DUCT WALL TC,CH 28,21 IN	876.2	0.4	1.78
DUCT WALL TC,CH 43,21 IN	828.6	0.9	-.04
DUCT WALL TC,CH 44,21 IN	829.5	0.4	-.00
TEST SECTION HOUSING THERMOCOUPLES			
TS SHELL-BOT(DEG F)	829.5	0.6	
TS GUARD HTR-BOT	797.8	0.3	
TS HTR-BOT	746.1	0.6	
TS SHELL-LOW CTR	841.1	0.8	
TS GUARD HTR-LOW CTR	841.3	0.8	
TS HTR-LOW CTR	764.8	0.5	
TS SHELL-UP CTR	859.9	0.6	
TS GUARD HTR-UP CTR	864.3	0.7	
TS HTR-UP CTR	836.5	0.9	
TS SHELL-TOP	848.8	1.1	
TS GUARD HTR-TOP	854.0	1.5	
TS HTR-TOP	853.2	1.1	
REFERENCE BOX THERMOCOUPLES			
150 DEG REF BOX 1(DEG F)	148.2	1.4	
150 DEG REF BOX 2	149.3	0.9	
150 DEG REF BOX 3	151.7	0.7	
150 DEG REF BOX 4	149.4	0.5	
150 DEG REF BOX 5	147.9	0.2	
MISCELLANEOUS			
SOD PUMP SPEED(RPM)	676.3	32.3	
EXPANSION TANK LEVEL(% FULL)	75.3	0.2	

TEST SERIES 10(BUNDLE 3C); TEST 10 RUN 110 01/16/78 10 46 22

CONDITIONS:

TEST SECTION FLOW: 0.89 L/S (14.1 GPM)

TEST SECTION POWER
(1 ROD HEATED): 14.4 KW (27.0 KW/M/ROD)(8.2 KW/FT/ROD)

TEST SECTION INLET TEMPERATURE: 444 DEG C (832 DEG F)

TEST SECTION OUTLET TEMPERATURE: 459 DEG C (858 DEG F)

HEAT BALANCE:

HEAT INPUT FROM 31 FUEL PIN SIMULATORS:	14.4 KW
HEAT ABSORBED BY SODIUM= FLOW X SP.HEAT X (TS OUT TEMP - TS IN TEMP)	14.0 KW
% OF INPUT HEAT ACCOUNTED FOR:	97.2 %

INSTRUMENT	20-SEC AVG	STD DEV
HEATER POWERS(KW)		
HTR POWER IN ROD 10	14.4	0.0
HTR POWER IN RODS 2,8,9	0.1	0.0
HTR POWER IN RODS 14,15,16	0.1	0.0
HTR POWER IN RODS 1,3,11,19	0.0	0.0
HTR POWER IN RODS 5,6,13,17	0.1	0.0
HTR POWER IN RODS 4,7,12,18	0.0	0.0
HTR POWER IN RODS 30,31	0.0	0.0
HTR POWER IN RODS 24,25,27,28	-0.3	0.0
HTR POWER IN RODS 33,34	-0.0	0.0
HTR POWER IN RODS 21,22,36,37	0.0	0.0
FLOWS		
TEST SECTION(TS) FLOW IN(GPM)	14.1	0.1
TS FLOW OUT(GPM)	14.1	0.1
TS BYPASS FLOW(GPM)	0.3	0.1
LOOP FLOW TOTAL(GPM)	14.4	0.2
RADIATOR AIR FLOW(CFM)	1.2	0.0
PRESSURES		
TS IN PRESS(PSIG)	15.5	0.1
TS OUT PRESS(PSIG)	6.2	0.1
PUMP OUT PRESS(PSIG)	10.6	0.0
TS LINE PRESS IN(PSIG)	14.3	0.1
EXP TANK ARGON PRESS(PSIG)	2.9	0.1
TS BYP LINE PRESS IN(PSIG)	15.6	0.1
TS BYP LINE PRESS OUT(PSIG)	9.9	0.1

Test 10, run 110 (continued)

INSTRUMENT	20-SEC AVG	STD DEV	NORMALIZED TEMP
LOOP THERMOCOUPLES			
TEST SECT INLET WELL(DEG F)	832.4	0.5	
TEST SECT OUTLET WELL(DEG F)	858.7	0.5	
PUMP IN PIPE WALL TC	844.4	4.7	
PUMP OUT PIPE WALL TC	822.4	1.2	
RAD IN PIPE WALL TC	849.0	0.4	
RAD OUT PIPE WALL TC	827.4	0.6	
HEATER INTERNAL THERMOCOUPLES			
HTR TC IN HTR 08,12AB IN(DEG F)	839.6	0.4	0.27
HTR TC IN HTR 13,12AB IN	845.4	8.0	0.49
HTR TC IN HTR 18,12AB IN	831.8	0.1	-.03
HTR TC IN HTR 22,12AB IN	921.1	0.3	3.38
HTR TC IN HTR 08,12BC IN	841.2	0.4	0.34
HTR TC IN HTR 13,12BC IN	832.8	0.5	0.01
HTR TC IN HTR 18,12BC IN	831.6	0.3	-.03
HTR TC IN HTR 22,12BC IN	922.0	0.7	3.41
HTR TC IN HTR 09,15AB IN	911.5	8.5	3.01
HTR TC IN HTR 10,15BC IN	1043.1	0.3	8.02
HTR TC IN HTR 16,15BC IN	832.4	0.5	-.00
HTR TC IN HTR 25,15BC IN	838.3	1.1	0.23
HTR TC IN HTR 02,15.1 IN	841.9	0.4	0.36
HTR TC IN HTR 03,15.1 IN	852.6	0.3	0.77
HTR TC IN HTR 06,15.1 IN	835.4	0.4	0.11
HTR TC IN HTR 15,15.1 IN	831.4	0.4	-.04
HTR TC IN HTR 24,15.1 IN	58.0	1.8	****
HTR TC IN HTR 33,15.1 IN	832.0	0.4	-.02
HTR TC IN HTR 36,15.1 IN	831.8	0.0	-.03
HTR TC IN HTR 02,15.4 IN	839.4	1.2	0.26
HTR TC IN HTR 03,15.4 IN	850.8	0.4	0.70
HTR TC IN HTR 06,15.4 IN	836.8	0.5	0.17
HTR TC IN HTR 15,15.4 IN	832.4	0.5	0.0
HTR TC IN HTR 24,15.4 IN	908.9	0.4	2.91
HTR TC IN HTR 33,15.4 IN	833.1	0.4	0.03
HTR TC IN HTR 34,15.4 IN	713.8	3.0	****
HTR TC IN HTR 36,15.4 IN	832.4	0.4	-.00
HTR TC IN HTR 02,15.6 IN	845.0	0.2	0.48
HTR TC IN HTR 03,15.6 IN	849.9	0.4	0.66
HTR TC IN HTR 06,15.6 IN	837.7	0.3	0.20
HTR TC IN HTR 15,15.6 IN	831.0	0.3	-.06
HTR TC IN HTR 24,15.6 IN	891.8	0.5	2.26
HTR TC IN HTR 33,15.6 IN	830.9	0.2	-.06
HTR TC IN HTR 34,15.6 IN	846.4	2.1	0.53
HTR TC IN HTR 36,15.6 IN	834.2	0.2	0.07
HTR TC IN HTR 03,15.9 IN	847.4	0.3	0.57
HTR TC IN HTR 06,15.9 IN	837.4	0.3	0.19
HTR TC IN HTR 15,15.9 IN	830.3	0.4	-.08
HTR TC IN HTR 24,15.9 IN	892.6	0.5	2.29
HTR TC IN HTR 33,15.9 IN	830.1	0.1	-.09
HTR TC IN HTR 34,15.9 IN	828.5	0.2	-.15
HTR TC IN HTR 36,15.9 IN	838.2	1.0	0.22
HTR TC IN HTR 04,16.1 IN	841.9	0.4	0.36

Test 10, run 110 (continued)

INSTRUMENT	20-SEC AVG	STD DEV	NORMALIZED TEMP
HTR TC IN HTR 05,16,1 IN	836.9	0.3	0.17
HTR TC IN HTR 07,16,1 IN	836.4	0.4	0.15
HTR TC IN HTR 21,16,1 IN	889.9	0.4	2.19
HTR TC IN HTR 27,16,1 IN	832.3	1.1	-.01
HTR TC IN HTR 04,16,4 IN	846.0	0.5	0.52
HTR TC IN HTR 05,16,4 IN	836.8	0.3	0.17
HTR TC IN HTR 07,16,4 IN	836.3	0.4	0.15
HTR TC IN HTR 21,16,4 IN	887.2	0.5	2.09
HTR TC IN HTR 27,16,4 IN	832.2	1.1	-.01
HTR TC IN HTR 04,16,6 IN	839.4	0.3	0.26
HTR TC IN HTR 05,16,6 IN	836.0	0.3	0.14
HTR TC IN HTR 07,16,6 IN	840.4	0.4	0.30
HTR TC IN HTR 21,16,6 IN	875.2	0.4	1.63
HTR TC IN HTR 27,16,6 IN	831.1	0.5	-.05
HTR TC IN HTR 04,16,9 IN	841.2	0.4	0.33
HTR TC IN HTR 07,16,9 IN	839.2	0.2	0.26
HTR TC IN HTR 21,16,9 IN	873.1	0.7	1.55
HTR TC IN HTR 27,16,9 IN	830.8	0.3	-.06
HTR TC IN HTR 11,18AB IN	875.8	0.5	1.65
HTR TC IN HTR 12,18AB IN	837.2	0.5	0.18
HTR TC IN HTR 14,18AB IN	836.8	1.5	0.17
HTR TC IN HTR 30,18AB IN	834.5	7.6	0.08
HTR TC IN HTR 11,18BC IN	878.7	0.4	1.76
HTR TC IN HTR 12,18BC IN	839.2	0.3	0.26
HTR TC IN HTR 14,18BC IN	822.1	5.7	-.39
HTR TC IN HTR 17,18BC IN	831.5	0.4	-.04
HTR TC IN HTR 30,18BC IN	832.7	7.3	0.01
WIRE WRAP THERMOCOUPLES			
WW TC ON HTR 12,-1 IN(DEG F)	835.7	3.6	0.13
WW TC ON HTR 16,-1 IN	833.3	0.5	0.03
WW TC ON HTR 12,01 IN	834.9	0.4	0.09
WW TC ON HTR 16,09 IN	835.7	0.5	0.12
WW TC ON HTR 04,11 IN	847.8	0.5	0.58
WW TC ON HTR 05,11 IN	835.9	0.2	0.13
WW TC ON HTR 13,11 IN	835.2	0.4	0.11
WW TC ON HTR 17,11 IN	834.0	0.4	0.06
WW TC ON HTR 28,11 IN	835.3	0.4	0.11
WW TC ON HTR 31,11 IN	834.4	0.3	0.07
WW TC ON HTR 03,13 IN	844.8	0.6	0.47
WW TC ON HTR 13,13 IN	834.8	0.4	0.09
WW TC ON HTR 15,13 IN	833.9	0.5	0.05
WW TC ON HTR 17,13 IN	833.5	0.4	0.04
WW TC ON HTR 22,13 IN	886.8	0.5	2.07
WW TC ON HTR 01,15 IN	843.6	0.4	0.42
WW TC ON HTR 03,15 IN	843.4	0.4	0.42
WW TC ON HTR 08,15 IN	841.8	1.1	0.36
WW TC ON HTR 10,15 IN	980.8	0.4	5.65
WW TC ON HTR 15,15 IN	834.8	0.4	0.09
WW TC ON HTR 19,15 IN	839.8	0.4	0.28
WW TC ON HTR 25,15 IN	837.2	0.4	0.18

Test 10, run 110 (continued)

INSTRUMENT	20-SEC AVG	STD DEV	NORMALIZED TEMP
WW TC ON HTR 36.15 IN	836.1	1.1	0.14
WW TC ON HTR 01.17 IN	841.7	0.4	0.35
WW TC AJ HTR 02.17 IN	861.1	0.5	1.09
WW TC OP HTR 02.17 IN	853.6	0.5	0.80
WW TC ON HTR 08.17 IN	854.0	0.2	0.82
WW TC ON HTR 10.17 IN	958.2	0.3	4.79
WW TC ON HTR 11.17 IN	848.7	0.5	0.62
WW TC ON HTR 18.17 IN	837.3	0.4	0.19
WW TC ON HTR 19.17 IN	843.7	0.5	0.43
WW TC ON HTR 21.17 IN	894.8	0.5	2.38
WW TC ON HTR 22.17 IN	959.1	0.5	4.82
WW TC ON HTR 33.17 IN	834.7	0.5	0.09
WW TC ON HTR 37.17 IN	859.0	1.4	1.01
WW TC ON HTR 06.19 IN	837.2	0.4	0.18
WW TC AJ HTR 07.19 IN	845.0	0.2	0.48
WW TC OP HTR 07.19 IN	843.9	0.4	0.44
WW TC ON HTR 09.19 IN	963.3	0.4	4.98
WW TC ON HTR 14.19 IN	833.8	0.4	0.05
WW TC ON HTR 18.19 IN	838.2	0.4	0.22
WW TC ON HTR 27.19 IN	838.6	0.4	0.24
WW TC ON HTR 30.19 IN	834.4	0.5	0.08
WW TC ON HTR 34.19 IN	830.4	0.7	-.08
WW TC ON HTR 36.19 IN	842.8	0.7	0.40
WW TC ON HTR 37.19 IN	888.2	0.8	2.13
WW TC ON HTR 05.21 IN	840.1	0.3	0.29
WW TC ON HTR 06.21 IN	837.5	0.4	0.19
WW TC ON HTR 21.21 IN	907.9	0.3	2.87
WW TC ON HTR 24.21 IN	857.3	0.3	0.95
WW TC ON HTR 25.21 IN	847.8	0.5	0.59
WW TC ON HTR 27.21 IN	838.9	0.4	0.25
WW TC ON HTR 30.21 IN	834.1	0.4	0.06
WW TC ON HTR 33.21 IN	833.8	1.1	0.05
WW TC ON HTR 34.21 IN	837.0	0.9	0.18
WW TC ON HTR 04.23 IN	864.4	0.4	1.22
WW TC ON HTR 09.23 IN	902.7	0.6	2.67
WW TC ON HTR 14.23 IN	834.3	0.5	0.07
WW TC ON HTR 24.23 IN	890.4	0.2	2.21
WW TC ON HTR 28.23 IN	834.7	0.5	0.09
WW TC ON HTR 31.23 IN	836.4	0.4	0.15
WW TC ON ROD 01.25 IN	837.5	0.2	0.19
WW TC ON ROD 02.25 IN	846.1	0.4	0.52
WW TC ON ROD 05.25 IN	840.5	0.4	0.31
WW TC ON ROD 08.25 IN	877.5	0.4	1.72
WW TC ON ROD 14.25 IN	836.7	0.1	0.16
WW TC ON ROD 04.27 IN	838.8	0.4	0.24
WW TC ON ROD 07.27 IN	839.2	1.3	0.26
WW TC ON ROD 12.27 IN	839.6	0.6	0.27
WW TC ON ROD 16.27 IN	838.9	0.4	0.25
WW TC ON ROD 18.27 IN	843.5	0.3	0.42
WW TC ON ROD 03.29 IN	871.5	0.2	1.49
WW TC ON ROD 06.29 IN	837.4	0.3	0.19
WW TC ON ROD 10.29 IN	877.3	1.2	1.71

Test 10, run 110 (continued)

INSTRUMENT	20-SEC AVG	STD DEV	NORMALIZED TEMP
WW TC ON ROD 01.37 IN	847.4	0.2	0.57
WW TC ON ROD 02.37 IN	866.7	0.4	1.31
WW TC ON ROD 08.37 IN	884.2	0.4	1.97
WW TC ON ROD 14.37 IN	838.7	0.4	0.24
WW TC ON ROD 04.51 IN	844.8	0.3	0.47
WW TC ON ROD 07.51 IN	851.2	0.7	0.72
WW TC ON ROD 12.51 IN	846.4	0.4	0.53
WW TC ON ROD 16.51 IN	845.0	0.0	0.48
WW TC ON ROD 18.51 IN	857.1	0.4	0.94
WW TC ON ROD 03.63 IN	860.2	0.4	1.06
WW TC ON ROD 06.63 IN	845.0	0.1	0.48
WW TC ON ROD 10.63 IN	864.9	0.1	1.24
DUCT THERMOCOUPLES			
DUCT WALL TC.CH 38.19 IN(DEG F)	833.7	0.7	0.05
DUCT WALL TC.CH 53.19 IN	840.0	0.1	0.29
DUCT WALL TC.CH 28.21 IN	897.9	0.1	2.49
DUCT WALL TC.CH 43.21 IN	833.7	0.7	0.05
DUCT WALL TC.CH 44.21 IN	836.2	0.5	0.14
TEST SECTION HOUSING THERMOCOUPLES			
TS SHELL-BOT(DEG F)	833.2	0.6	
TS GUARD HTR-BOT	800.4	0.4	
TS HTR-BOT	747.7	0.7	
TS SHELL-LOW CTR	856.5	0.6	
TS GUARD HTR-LOW CTR	849.7	1.0	
TS HTR-LOW CTR	768.1	0.6	
TS SHELL-UP CTR	865.1	0.4	
TS GUARD HTR-UP CTR	868.2	0.9	
TS HTR-UP CTR	839.8	0.9	
TS SHELL-TOP	852.3	1.1	
TS GUARD HTR-TOP	857.5	1.6	
TS HTR-TOP	856.6	1.4	
REFERENCE BOX THERMOCOUPLES			
150 DEG REF BOX 1(DEG F)	148.2	1.2	
150 DEG REF BOX 2	149.3	0.8	
150 DEG REF BOX 3	151.8	1.0	
150 DEG REF BOX 4	149.5	0.5	
150 DEG REF BOX 5	148.2	0.4	
MISCELLANEOUS			
SOD PUMP SPEED(RPM)	678.5	11.1	
EXPANSION TANK LEVEL(% FULL)	75.4	0.2	

TEST SERIES 10(BUNDLE 3C); TEST 10 RUN 111 01/16/78 11 5 35

CONDITIONS:
TEST SECTION FLOW: 0.90 L/S (14.1 GPM)
TEST SECTION POWER
(1 ROD HEATED): 14.5 KW (27.1 KW/M/ROD)(8.3 KW/FT/ROD)

TEST SECTION INLET TEMPERATURE: 446 DEG C (835 DEG F)
TEST SECTION OUTLET TEMPERATURE: 460 DEG C (861 DEG F)

HEAT BALANCE:

HEAT INPUT FROM 31 FUEL PIN SIMULATORS: 14.5 KW
HEAT ABSORBED BY SODIUM=
FLOW X SP.HEAT X (TS OUT TEMP - TS IN TEMP) 14.1 KW
% OF INPUT HEAT ACCOUNTED FOR: 97.5 %

INSTRUMENT	20-SEC AVG	STD DEV
HEATER POWERS(KW)		
HTR POWER IN ROD 11	14.5	0.0
HTR POWER IN RODS 8,9,10	0.1	0.0
HTR POWER IN RODS 14,15,16	0.0	0.0
HTR POWER IN RODS 1,2,3,19	0.0	0.0
HTR POWER IN RODS 5,6,13,17	0.1	0.0
HTR POWER IN RODS 4,7,12,18	0.0	0.0
HTR POWER IN RODS 30,31	0.0	0.0
HTR POWER IN RODS 24,25,27,28	-0.3	0.0
HTR POWER IN RODS 33,34	-0.0	0.0
HTR POWER IN RODS 21,22,36,37	0.1	0.0
FLOWS		
TEST SECTION(TS) FLOW IN(GPM)	14.1	0.1
TS FLOW OUT(GPM)	14.1	0.1
TS BYPASS FLOW(GPM)	0.9	0.1
LOOP FLOW TOTAL(GPM)	14.4	0.2
RADIATOR AIR FLOW(CFM)	1.2	0.0
PRESSURES		
TS IN PRESS(PSIG)	15.5	0.1
TS OUT PRESS(PSIG)	6.2	0.1
PUMP OUT PRESS(PSIG)	10.6	0.1
TS LINE PRESS IN(PSIG)	14.3	0.1
EXP TANK ARGON PRESS(PSIG)	2.9	0.1
TS BYP LINE PRESS IN(PSIG)	15.5	0.1
TS BYP LINE PRESS OUT(PSIG)	9.9	0.1

Test 10, run 111 (continued)

INSTRUMENT	20-SEC AVG	STD DEV	NORMALIZED TEMP
LOOP THERMOCOUPLES			
TEST SECT INLET WELL(DEG F)	835.2	0.3	
TEST SECT OUTLET WELL(DEG F)	861.6	0.3	
PUMP IN PIPE WALL TC	846.8	4.1	
PUMP OUT PIPE WALL TC	824.4	1.0	
RAD IN PIPE WALL TC	851.5	0.4	
RAD OUT PIPE WALL TC	829.0	0.5	
HEATER INTERNAL THERMOCOUPLES			
HTR TC IN HTR 08,12AB IN(DEG F)	837.7	0.4	0.09
HTR TC IN HTR 13,12AB IN	848.2	8.0	0.49
HTR TC IN HTR 18,12AB IN	833.1	0.4	-.08
HTR TC IN HTR 22,12AB IN	843.6	1.9	0.32
HTR TC IN HTR 08,12BC IN	837.3	0.4	0.08
HTR TC IN HTR 13,12BC IN	835.4	0.5	0.01
HTR TC IN HTR 18,12BC IN	834.3	0.4	-.03
HTR TC IN HTR 22,12BC IN	847.0	1.0	0.45
HTR TC IN HTR 09,15AB IN	872.2	8.6	1.40
HTR TC IN HTR 10,15BC IN	888.5	0.5	2.02
HTR TC IN HTR 16,15BC IN	833.2	0.6	-.08
HTR TC IN HTR 25,15BC IN	903.6	0.9	2.59
HTR TC IN HTR 02,15.1 IN	842.0	0.4	0.26
HTR TC IN HTR 03,15.1 IN	863.1	0.6	1.06
HTR TC IN HTR 06,15.1 IN	842.7	0.4	0.29
HTR TC IN HTR 15,15.1 IN	836.2	0.5	0.04
HTR TC IN HTR 24,15.1 IN	957.0	0.9	4.62
HTR TC IN HTR 33,15.1 IN	834.3	0.1	-.04
HTR TC IN HTR 36,15.1 IN	832.8	0.6	-.09
HTR TC IN HTR 02,15.4 IN	841.5	2.4	0.24
HTR TC IN HTR 03,15.4 IN	858.9	0.6	0.90
HTR TC IN HTR 06,15.4 IN	837.6	0.4	0.09
HTR TC IN HTR 15,15.4 IN	837.2	0.5	0.08
HTR TC IN HTR 24,15.4 IN	954.4	0.9	4.52
HTR TC IN HTR 33,15.4 IN	834.2	0.3	-.04
HTR TC IN HTR 34,15.4 IN	865.8	25.8	1.16
HTR TC IN HTR 36,15.4 IN	831.9	0.3	-.12
HTR TC IN HTR 02,15.6 IN	847.8	0.4	0.48
HTR TC IN HTR 03,15.6 IN	866.6	0.5	1.19
HTR TC IN HTR 06,15.6 IN	839.8	0.4	0.17
HTR TC IN HTR 15,15.6 IN	836.9	0.6	0.07
HTR TC IN HTR 24,15.6 IN	959.8	1.2	4.72
HTR TC IN HTR 33,15.6 IN	833.8	0.4	-.05
HTR TC IN HTR 34,15.6 IN	837.3	4.3	0.08
HTR TC IN HTR 36,15.6 IN	832.0	0.4	-.12
HTR TC IN HTR 03,15.9 IN	867.8	0.5	1.24
HTR TC IN HTR 06,15.9 IN	842.7	0.5	0.28
HTR TC IN HTR 15,15.9 IN	835.1	0.5	-.00
HTR TC IN HTR 24,15.9 IN	962.7	0.6	4.83
HTR TC IN HTR 33,15.9 IN	831.9	0.3	-.12
HTR TC IN HTR 34,15.9 IN	831.3	0.4	-.15
HTR TC IN HTR 36,15.9 IN	831.8	1.7	-.13

Test 10, run 111 (continued)

INSTRUMENT	20-SEC AVG	STD DEV	NORMALIZED TEMP
HTR TC IN HTR 04,16.1 IN	879.5	0.7	1.68
HTR TC IN HTR 05,16.1 IN	850.1	0.4	0.56
HTR TC IN HTR 07,16.1 IN	841.2	0.4	0.23
HTR TC IN HTR 21,16.1 IN	851.0	0.3	0.60
HTR TC IN HTR 27,16.1 IN	842.8	1.0	0.29
HTR TC IN HTR 04,16.4 IN	872.8	1.2	1.43
HTR TC IN HTR 05,16.4 IN	853.1	0.4	0.68
HTR TC IN HTR 07,16.4 IN	841.8	0.3	0.25
HTR TC IN HTR 21,16.4 IN	848.4	0.4	0.50
HTR TC IN HTR 27,16.4 IN	843.1	0.7	0.30
HTR TC IN HTR 04,16.6 IN	868.9	1.0	1.28
HTR TC IN HTR 05,16.6 IN	844.7	0.4	0.36
HTR TC IN HTR 07,16.6 IN	842.3	0.4	0.27
HTR TC IN HTR 21,16.6 IN	844.2	0.2	0.34
HTR TC IN HTR 27,16.6 IN	841.0	0.5	0.22
HTR TC IN HTR 04,16.9 IN	870.3	0.6	1.33
HTR TC IN HTR 07,16.9 IN	842.0	0.4	0.26
HTR TC IN HTR 21,16.9 IN	842.1	0.7	0.26
HTR TC IN HTR 27,16.9 IN	840.5	0.4	0.20
HTR TC IN HTR 11,18AB IN	1057.7	0.6	8.43
HTR TC IN HTR 12,18AB IN	877.4	0.9	1.60
HTR TC IN HTR 14,18AB IN	839.2	1.6	0.15
HTR TC IN HTR 30,18AB IN	836.5	7.6	0.05
HTR TC IN HTR 11,18BC IN	1056.5	0.4	8.39
HTR TC IN HTR 12,18BC IN	878.7	0.8	1.65
HTR TC IN HTR 14,18BC IN	822.7	4.3	-.47
HTR TC IN HTR 17,18BC IN	834.2	0.2	-.04
HTR TC IN HTR 30,18BC IN	833.9	7.3	-.05
WIRE WRAP THERMOCOUPLES			
WW TC ON HTR 12,-1 IN(DEG F)	841.5	3.0	0.24
WW TC ON HTR 16,-1 IN	837.7	0.4	0.10
WW TC ON HTR 12,01 IN	836.5	0.6	0.05
WW TC ON HTR 16,09 IN	836.6	0.4	0.05
WW TC ON HTR 04,11 IN	883.7	0.4	1.84
WW TC ON HTR 05,11 IN	840.9	0.2	0.22
WW TC ON HTR 13,11 IN	843.9	0.4	0.33
WW TC ON HTR 17,11 IN	835.9	0.2	0.03
WW TC ON HTR 28,11 IN	839.3	0.3	0.16
WW TC ON HTR 31,11 IN	834.6	0.4	-.02
WW TC ON HTR 03,13 IN	853.6	0.9	0.70
WW TC ON HTR 13,13 IN	839.2	0.3	0.15
WW TC ON HTR 15,13 IN	836.5	0.4	0.05
WW TC ON HTR 17,13 IN	835.9	0.2	0.03
WW TC ON HTR 22,13 IN	844.9	0.3	0.37
WW TC ON HTR 01,15 IN	850.8	0.3	0.59
WW TC ON HTR 03,15 IN	863.2	0.5	1.06
WW TC ON HTR 08,15 IN	835.7	1.0	0.02
WW TC ON HTR 10,15 IN	938.3	0.7	3.91
WW TC ON HTR 15,15 IN	836.7	0.4	0.06
WW TC ON HTR 19,15 IN	839.9	0.3	0.18

Test 10, run 111 (continued)

INSTRUMENT	20-SEC AVG	STD DEV	NORMALIZED TEMP
WW TC ON HTR 25.15 IN	865.1	0.4	1.14
WW TC ON HTR 36.15 IN	835.6	1.0	0.01
WW TC ON HTR 01.17 IN	860.6	0.6	0.96
WW TC AJ HTR 02.17 IN	852.0	0.7	0.64
WW TC OP HTR 02.17 IN	853.7	0.5	0.70
WW TC ON HTR 08.17 IN	840.9	0.2	0.22
WW TC ON HTR 10.17 IN	990.5	0.4	5.88
WW TC ON HTR 11.17 IN	968.7	0.5	5.06
WW TC ON HTR 18.17 IN	838.9	0.4	0.14
WW TC ON HTR 19.17 IN	840.3	0.5	0.20
WW TC ON HTR 21.17 IN	852.3	0.3	0.65
WW TC ON HTR 22.17 IN	884.1	0.4	1.85
WW TC ON HTR 33.17 IN	837.9	0.5	0.10
WW TC ON HTR 37.17 IN	839.2	1.1	0.15
WW TC ON HTR 06.19 IN	842.7	0.4	0.28
WW TC AJ HTR 07.19 IN	842.8	0.4	0.29
WW TC OP HTR 07.19 IN	842.9	0.4	0.29
WW TC ON HTR 09.19 IN	866.3	0.7	1.18
WW TC ON HTR 14.19 IN	838.6	0.5	0.13
WW TC ON HTR 18.19 IN	839.5	0.4	0.16
WW TC ON HTR 27.19 IN	841.5	0.4	0.24
WW TC ON HTR 30.19 IN	836.0	0.4	0.03
WW TC ON HTR 34.19 IN	831.4	0.9	-.14
WW TC ON HTR 36.19 IN	837.2	0.8	0.08
WW TC ON HTR 37.19 IN	855.0	0.8	0.75
WW TC ON HTR 05.21 IN	857.3	0.3	0.84
WW TC ON HTR 06.21 IN	843.0	0.4	0.30
WW TC ON HTR 21.21 IN	879.2	0.5	1.67
WW TC ON HTR 24.21 IN	884.8	0.3	1.88
WW TC ON HTR 25.21 IN	889.6	0.4	2.06
WW TC ON HTR 27.21 IN	846.4	0.5	0.43
WIRE WRAP THERMOCOUPLES			
WW TC ON HTR 30.21 IN	836.2	0.4	0.04
WW TC ON HTR 33.21 IN	835.8	1.1	0.02
WW TC ON HTR 34.21 IN	832.2	1.0	-.11
WW TC ON HTR 04.23 IN	930.0	0.8	3.59
WW TC ON HTR 09.23 IN	856.1	0.7	0.79
WW TC ON HTR 14.23 IN	837.0	0.5	0.07
WW TC ON HTR 24.23 IN	904.4	0.3	2.62
WW TC ON HTR 28.23 IN	837.1	0.5	0.07
WW TC ON HTR 31.23 IN	835.2	0.3	-.00
WW TC ON ROD 01.25 IN	845.0	0.0	0.37
WW TC ON ROD 02.25 IN	841.6	0.2	0.25
WW TC ON ROD 05.25 IN	845.0	0.1	0.37
WW TC ON ROD 08.25 IN	853.5	0.4	0.69
WW TC ON ROD 14.25 IN	838.4	0.1	0.12
WW TC ON ROD 04.27 IN	858.5	0.4	0.88
WW TC ON ROD 07.27 IN	842.3	1.1	0.27
WW TC ON ROD 12.27 IN	851.1	0.7	0.60
WW TC ON ROD 16.27 IN	839.2	0.1	0.15
WW TC ON ROD 18.27 IN	839.3	0.3	0.16

Test 10, run 111 (continued)

INSTRUMENT	20-SEC AVG	STD DEV	NORMALIZED TEMP
WW TC ON ROD 03,29 IN	924.3	0.2	3.38
WW TC ON ROD 06,29 IN	844.7	0.4	0.36
WW TC ON ROD 10,29 IN	909.1	1.1	2.80
WW TC ON ROD 01,37 IN	851.6	0.2	0.62
WW TC ON ROD 02,37 IN	854.1	0.1	0.72
WW TC ON ROD 08,37 IN	858.4	0.3	0.88
WW TC ON ROD 14,37 IN	842.5	0.1	0.28
WW TC ON ROD 04,51 IN	858.3	0.2	0.88
WW TC ON ROD 07,51 IN	850.2	0.5	0.57
WW TC ON ROD 12,51 IN	856.8	0.4	0.82
WW TC ON ROD 16,51 IN	844.2	0.1	0.34
WW TC ON ROD 18,51 IN	848.2	0.3	0.49
WW TC ON ROD 03,63 IN	871.5	0.1	1.38
WW TC ON ROD 06,63 IN	845.2	0.4	0.38
WW TC ON ROD 10,63 IN	879.7	0.1	1.69
DUCT THERMOCOUPLES			
DUCT WALL TC,CH 38,19 IN(DEG F)	843.7	0.6	0.32
DUCT WALL TC,CH 53,19 IN	834.2	0.2	-.04
DUCT WALL TC,CH 28,21 IN	862.4	0.1	1.03
DUCT WALL TC,CH 43,21 IN	834.7	0.9	-.02
DUCT WALL TC,CH 44,21 IN	836.1	0.4	0.04
TEST SECTION HOUSING THERMOCOUPLES			
TS SHELL-BOT(DEG F)	835.4	0.4	
TS GUARD HTR-BOT	801.9	0.3	
TS HTR-BOT	749.1	0.5	
TS SHELL-LOW CTR	849.3	0.3	
TS GUARD HTR-LOW CTR	850.2	0.7	
TS HTR-LOW CTR	769.5	0.7	
TS SHELL-UP CTR	863.3	0.4	
TS GUARD HTR-UP CTR	870.3	0.6	
TS HTR-UP CTR	842.4	0.8	
TS SHELL-TOP	857.7	0.7	
TS GUARD HTR-TOP	861.8	1.6	
TS HTR-TOP	858.9	1.1	
REFERENCE BOX THERMOCOUPLES			
150 DEG REF BOX 1(DEG F)	147.8	1.0	
150 DEG REF BOX 2	149.1	0.8	
150 DEG REF BOX 3	151.7	0.8	
150 DEG REF BOX 4	149.3	0.4	
150 DEG REF BOX 5	148.0	0.3	
MISCELLANEOUS			
SOD PUMP SPEED(RPM)	679.5	28.7	
EXPANSION TANK LEVEL(% FULL)	75.1	0.1	

TEST SERIES 10(BUNDLE 3C); TEST 10 RUN 112 01/16/78 11 24 50

CONDITIONS:
TEST SECTION FLOW: 0.89 L/S (14.1 GPM)
TEST SECTION POWER
(1 ROD HEATED): 14.5 KW (27.2 KW/M/ROD)(8.3 KW/FT/ROD)

TEST SECTION INLET TEMPERATURE: 447 DEG C (836 DEG F)
TEST SECTION OUTLET TEMPERATURE: 461 DEG C (863 DEG F)

HEAT BALANCE:

HEAT INPUT FROM 31 FUEL PIN SIMULATORS: 14.5 KW
HEAT ABSORBED BY SODIUM=
FLOW X SP.HEAT X (TS OUT TEMP - TS IN TEMP) 14.1 KW
% OF INPUT HEAT ACCOUNTED FOR: 97.3 %

INSTRUMENT	20-SEC AVG	STD DEV
HEATER POWERS(KW)		
HTR POWER IN ROD 12	14.5	0.0
HTR POWER IN RODS 8,9,10	0.1	0.0
HTR POWER IN RODS 14,15,16	0.0	0.0
HTR POWER IN RODS 1,3,11,19	0.0	0.0
HTR POWER IN RODS 5,6,13,17	0.1	0.0
HTR POWER IN RODS 2,4,7,18	0.0	0.0
HTR POWER IN RODS 30,31	0.0	0.0
HTR POWER IN RODS 24,25,27,28	-0.3	0.0
HTR POWER IN RODS 33,34	-0.0	0.0
HTR POWER IN RODS 21,22,36,37	0.1	0.0
FLOWS		
TEST SECTION(TS) FLOW IN(GPM)	14.1	0.1
TS FLOW OUT(GPM)	14.1	0.1
TS BYPASS FLOW(GPM)	1.0	0.1
LOOP FLOW TOTAL(GPM)	14.4	0.2
RADIATOR AIR FLOW(CFM)	1.2	0.0
PRESSURES		
TS IN PRESS(PSIG)	15.5	0.1
TS OUT PRESS(PSIG)	6.2	0.1
PUMP OUT PRESS(PSIG)	10.6	0.0
TS LINE PRESS IN(PSIG)	14.2	0.1
EXP TANK ARGON PRESS(PSIG)	2.8	0.1
TS BYP LINE PRESS IN(PSIG)	15.5	0.1
TS BYP LINE PRESS OUT(PSIG)	9.9	0.1

Test 10, run 112 (continued)

INSTRUMENT	20-SEC AVG	STD DEV	NORMALIZED TEMP
LOOP THERMOCOUPLES			
TEST SECT INLET WELL(DEG F)	836.9	0.4	
TEST SECT OUTLET WELL(DEG F)	863.4	0.5	
PUMP IN PIPE WALL TC	849.0	0.5	
PUMP OUT PIPE WALL TC	826.1	1.3	
RAD IN PIPE WALL TC	853.3	0.5	
RAD OUT PIPE WALL TC	830.9	0.5	
HEATER INTERNAL THERMOCOUPLES			
HTR TC IN HTR 08,12AB IN(DEG F)	837.7	0.3	0.03
HTR TC IN HTR 13,12AB IN	860.9	7.6	0.91
HTR TC IN HTR 18,12AB IN	835.3	0.4	-.06
HTR TC IN HTR 22,12AB IN	836.6	0.3	-.01
HTR TC IN HTR 08,12BC IN	838.4	0.4	0.06
HTR TC IN HTR 13,12BC IN	849.4	0.5	0.47
HTR TC IN HTR 18,12BC IN	835.7	0.4	-.05
HTR TC IN HTR 22,12BC IN	836.5	0.9	-.02
HTR TC IN HTR 09,15AB IN	852.6	8.6	0.59
HTR TC IN HTR 10,15BC IN	845.2	0.4	0.31
HTR TC IN HTR 16,15BC IN	836.5	0.4	-.02
HTR TC IN HTR 25,15BC IN	922.3	0.8	3.23
HTR TC IN HTR 02,15.1 IN	840.1	0.4	0.12
HTR TC IN HTR 03,15.1 IN	846.2	0.5	0.35
HTR TC IN HTR 06,15.1 IN	843.7	0.7	0.26
HTR TC IN HTR 15,15.1 IN	839.4	0.4	0.09
HTR TC IN HTR 24,15.1 IN	878.4	0.5	1.57
HTR TC IN HTR 33,15.1 IN	836.0	0.2	-.04
HTR TC IN HTR 36,15.1 IN	833.6	0.4	-.12
HTR TC IN HTR 02,15.4 IN	834.9	0.5	-.08
HTR TC IN HTR 03,15.4 IN	851.8	1.1	0.56
HTR TC IN HTR 06,15.4 IN	839.8	1.1	0.11
HTR TC IN HTR 15,15.4 IN	841.8	0.5	0.18
HTR TC IN HTR 24,15.4 IN	880.3	0.5	1.64
HTR TC IN HTR 33,15.4 IN	836.9	0.3	-.00
HTR TC IN HTR 34,15.4 IN	792.3	13.8	****
HTR TC IN HTR 36,15.4 IN	834.2	0.1	-.10
HTR TC IN HTR 02,15.6 IN	843.3	0.2	0.24
HTR TC IN HTR 03,15.6 IN	853.9	0.8	0.64
HTR TC IN HTR 06,15.6 IN	842.0	0.9	0.19
HTR TC IN HTR 15,15.6 IN	838.2	0.3	0.05
HTR TC IN HTR 24,15.6 IN	885.0	0.6	1.82
HTR TC IN HTR 33,15.6 IN	834.9	0.3	-.08
HTR TC IN HTR 34,15.6 IN	845.0	1.5	0.31
HTR TC IN HTR 36,15.6 IN	834.4	0.3	-.10
HTR TC IN HTR 03,15.9 IN	855.0	0.3	0.68
HTR TC IN HTR 06,15.9 IN	845.0	0.2	0.30
HTR TC IN HTR 15,15.9 IN	837.1	0.4	0.01
HTR TC IN HTR 24,15.9 IN	885.7	0.7	1.85
HTR TC IN HTR 33,15.9 IN	834.4	0.3	-.10
HTR TC IN HTR 34,15.9 IN	832.6	0.4	-.16
HTR TC IN HTR 36,15.9 IN	837.4	1.0	0.02

Test 10, run 112 (continued)

INSTRUMENT	20-SEC AVG	STD DEV	NORMALIZED TEMP
HTR TC IN HTR 04,16.1 IN	867.8	0.6	1.17
HTR TC IN HTR 05,16.1 IN	864.4	0.5	1.04
HTR TC IN HTR 07,16.1 IN	839.5	0.4	0.10
HTR TC IN HTR 21,16.1 IN	841.7	0.2	0.18
HTR TC IN HTR 27,16.1 IN	923.6	1.0	3.28
HTR TC IN HTR 04,16.4 IN	867.2	0.5	1.15
HTR TC IN HTR 05,16.4 IN	866.0	1.6	1.10
HTR TC IN HTR 07,16.4 IN	839.9	0.5	0.11
HTR TC IN HTR 21,16.4 IN	843.8	0.4	0.26
HTR TC IN HTR 27,16.4 IN	924.7	0.7	3.32
HTR TC IN HTR 04,16.6 IN	873.5	0.4	1.38
HTR TC IN HTR 05,16.6 IN	852.5	0.3	0.59
HTR TC IN HTR 07,16.6 IN	841.7	0.2	0.18
HTR TC IN HTR 21,16.6 IN	836.1	0.4	-.03
HTR TC IN HTR 27,16.6 IN	918.4	0.9	3.08
HTR TC IN HTR 04,16.9 IN	874.3	0.5	1.41
HTR TC IN HTR 07,16.9 IN	840.0	0.4	0.12
HTR TC IN HTR 21,16.9 IN	833.0	1.2	-.15
HTR TC IN HTR 27,16.9 IN	916.9	0.7	3.03
HTR TC IN HTR 11,18AB IN	884.3	0.5	1.79
HTR TC IN HTR 12,18AB IN	1061.3	0.4	8.49
HTR TC IN HTR 14,18AB IN	843.1	1.5	0.23
HTR TC IN HTR 30,18AB IN	838.9	7.6	0.07
HTR TC IN HTR 11,18BC IN	882.7	0.6	1.73
HTR TC IN HTR 12,18BC IN	1060.2	0.4	8.45
HTR TC IN HTR 14,18BC IN	820.6	8.4	-.62
HTR TC IN HTR 17,18BC IN	835.8	0.3	-.04
HTR TC IN HTR 30,18BC IN	836.8	7.3	-.01
WIRE WRAP THERMOCOUPLES			
WW TC ON HTR 12,-1 IN(DEG F)	844.6	3.6	0.29
WW TC ON HTR 16,-1 IN	838.5	0.5	0.06
WW TC ON HTR 12,01 IN	866.4	4.6	1.12
WW TC ON HTR 16,09 IN	838.9	0.5	0.08
WW TC ON HTR 04,11 IN	863.5	0.6	1.01
WW TC ON HTR 05,11 IN	845.0	0.2	0.30
WW TC ON HTR 13,11 IN	881.1	1.1	1.67
WW TC ON HTR 17,11 IN	837.6	0.2	0.02
WW TC ON HTR 28,11 IN	843.4	0.6	0.24
WW TC ON HTR 31,11 IN	837.9	0.5	0.04
WW TC ON HTR 03,13 IN	841.7	0.9	0.18
WW TC ON HTR 13,13 IN	849.9	0.5	0.49
WW TC ON HTR 15,13 IN	838.3	0.4	0.05
WW TC ON HTR 17,13 IN	837.6	0.3	0.02
WW TC ON HTR 22,13 IN	841.8	0.4	0.18
WW TC ON HTR 01,15 IN	852.4	0.5	0.58
WW TC ON HTR 03,15 IN	855.6	0.5	0.71
WW TC ON HTR 08,15 IN	836.1	1.2	-.03
WW TC ON HTR 10,15 IN	858.3	0.2	0.81
WW TC ON HTR 15,15 IN	839.2	0.3	0.08
WW TC ON HTR 19,15 IN	841.3	0.4	0.16

Test 10, run 112 (continued)

INSTRUMENT	20-SEC AVG	STD DEV	NORMALIZED TEMP
WW TC ON HTR 25,15 IN	937.0	0.5	3.79
WW TC ON HTR 36,15 IN	837.8	0.8	0.03
WW TC ON HTR 01,17 IN	869.6	0.6	1.24
WW TC AJ HTR 02,17 IN	844.8	0.4	0.30
WW TC OP HTR 02,17 IN	844.5	0.4	0.28
WW TC ON HTR 08,17 IN	839.8	0.4	0.11
WW TC ON HTR 10,17 IN	879.0	0.4	1.59
WW TC ON HTR 11,17 IN	965.4	0.4	4.86
WW TC ON HTR 18,17 IN	840.6	0.5	0.14
WW TC ON HTR 19,17 IN	840.6	0.4	0.14
WW TC ON HTR 21,17 IN	844.6	0.5	0.29
WW TC ON HTR 22,17 IN	864.8	0.4	1.05
WW TC ON HTR 33,17 IN	839.7	0.5	0.11
WW TC ON HTR 37,17 IN	838.8	1.3	0.07
WW TC ON HTR 06,19 IN	845.0	0.3	0.31
WW TC AJ HTR 07,19 IN	842.1	0.5	0.20
WW TC OP HTR 07,19 IN	842.2	0.4	0.20
WW TC ON HTR 09,19 IN	848.7	0.4	0.44
WW TC ON HTR 14,19 IN	847.9	0.5	0.41
WW TC ON HTR 18,19 IN	840.3	0.4	0.13
WW TC ON HTR 27,19 IN	855.0	0.4	0.68
WW TC ON HTR 30,19 IN	839.4	0.4	0.09
WW TC ON HTR 34,19 IN	833.6	0.9	-.12
WW TC ON HTR 36,19 IN	838.3	0.8	0.05
WW TC ON HTR 37,19 IN	847.0	0.7	0.38
WW TC ON HTR 05,21 IN	870.5	0.3	1.27
WW TC ON HTR 06,21 IN	844.2	0.4	0.28
WW TC ON HTR 21,21 IN	869.3	0.4	1.22
WW TC ON HTR 24,21 IN	893.4	0.4	2.14
WW TC ON HTR 25,21 IN	906.7	1.1	2.64
WW TC ON HTR 27,21 IN	900.0	0.6	2.39
WW TC ON HTR 30,21 IN	839.3	0.4	0.09
WW TC ON HTR 33,21 IN	838.1	1.2	0.04
WW TC ON HTR 34,21 IN	834.6	0.9	-.09
WW TC ON HTR 04,23 IN	888.5	0.4	1.95
WW TC ON HTR 09,23 IN	847.1	0.5	0.38
WW TC ON HTR 14,23 IN	843.1	0.4	0.23
WW TC ON HTR 24,23 IN	892.9	0.3	2.12
WW TC ON HTR 28,23 IN	847.2	0.6	0.39
WW TC ON HTR 31,23 IN	838.4	0.6	0.06
WW TC ON ROD 01,25 IN	847.6	0.2	0.40
WW TC ON ROD 02,25 IN	840.0	0.2	0.12
WW TC ON ROD 05,25 IN	850.8	0.1	0.53
WW TC ON ROD 08,25 IN	848.5	0.3	0.44
WW TC ON ROD 14,25 IN	842.0	0.4	0.19
WW TC ON ROD 04,27 IN	892.3	0.3	2.10
WW TC ON ROD 07,27 IN	844.1	1.5	0.27
WW TC ON ROD 12,27 IN	882.7	0.7	1.73
WW TC ON ROD 16,27 IN	841.8	0.3	0.18
WW TC ON ROD 18,27 IN	840.8	0.1	0.15
WW TC ON ROD 03,29 IN	912.8	0.2	2.87
WW TC ON ROD 06,29 IN	850.6	0.3	0.52

Test 10, run 112 (continued)

INSTRUMENT	20-SEC AVG	STD DEV	NORMALIZED TEMP
WW TC ON ROD 10.29 IN	904.9	1.1	2.57
WW TC ON ROD 01.37 IN	848.4	0.3	0.43
WW TC ON ROD 02.37 IN	847.2	0.4	0.39
WW TC ON ROD 08.37 IN	852.9	0.4	0.60
WW TC ON ROD 14.37 IN	849.4	0.4	0.47
WW TC ON ROD 04.51 IN	869.0	0.1	1.21
WW TC ON ROD 07.51 IN	849.2	0.5	0.46
WW TC ON ROD 12.51 IN	872.3	0.3	1.34
WW TC ON ROD 16.51 IN	847.3	0.4	0.39
WW TC ON ROD 18.51 IN	847.8	0.4	0.41
WW TC ON ROD 03.63 IN	873.9	0.2	1.40
WW TC ON ROD 06.63 IN	848.2	0.3	0.42
WW TC ON ROD 10.63 IN	884.5	0.3	1.80
DUCT THERMOCOUPLES			
DUCT WALL TC.CH 38.19 IN(DEG F)	892.8	0.8	2.11
DUCT WALL TC.CH 53.19 IN	836.7	0.1	-.01
DUCT WALL TC.CH 28.21 IN	854.2	0.2	0.65
DUCT WALL TC.CH 43.21 IN	838.2	0.8	0.05
DUCT WALL TC.CH 44.21 IN	839.4	0.3	0.09
TEST SECTION HOUSING THERMOCOUPLES			
TS SHELL-BOT(DEG F)	837.6	0.6	
TS GUARD HTR-BOT	803.5	0.3	
TS HTR-BOT	750.6	0.5	
TS SHELL-LOW CTR	856.6	0.8	
TS GUARD HTR-LOW CTR	854.5	0.8	
TS HTR-LOW CTR	771.6	0.7	
TS SHELL-UP CTR	868.2	0.6	
TS GUARD HTR-UP CTR	873.7	0.8	
TS HTR-UP CTR	844.8	0.9	
TS SHELL-TOP	861.7	1.1	
TS GUARD HTR-TOP	865.5	1.4	
TS HTR-TOP	861.3	1.2	
REFERENCE BOX THERMOCOUPLES			
150 DEG REF BOX 1(DEG F)	148.2	1.5	
150 DEG REF BOX 2	149.4	0.9	
150 DEG REF BOX 3	151.6	0.8	
150 DEG REF BOX 4	149.3	0.4	
150 DEG REF BOX 5	148.0	0.3	
MISCELLANEOUS			
SOD PUMP SPEED(RPM)	677.3	1.3	
EXPANSION TANK LEVEL(% FULL)	75.0	0.2	

TEST SERIES 10(BUNDLE 3C); TEST 10 RUN 113 01/16/78 11 47 53

CONDITIONS:
TEST SECTION FLOW: 0.90 L/S (14.2 GPM)
TEST SECTION POWER
(1 ROD HEATED): 14.4 KW (27.1 KW/M/ROD)(8.3 KW/FT/ROD)

TEST SECTION INLET TEMPERATURE: 448 DEG C (839 DEG F)
TEST SECTION OUTLET TEMPERATURE: 463 DEG C (866 DEG F)

HEAT BALANCE:

HEAT INPUT FROM 31 FUEL PIN SIMULATORS: 14.4 KW
HEAT ABSORBED BY SODIUM=
FLOW X SP.HEAT X (TS OUT TEMP - TS IN TEMP) 14.4 KW
% OF INPUT HEAT ACCOUNTED FOR: 99.8 %

INSTRUMENT	20-SEC AVG	STD DEV
HEATER POWERS(KW)		
HTR POWER IN ROD 13	14.4	0.0
HTR POWER IN RODS 8,9,10	0.1	0.0
HTR POWER IN RODS 14,15,16	0.0	0.0
HTR POWER IN RODS 1,3,11,19	0.0	0.0
HTR POWER IN RODS 2,5,6,17	0.1	0.0
HTR POWER IN RODS 4,7,12,18	0.0	0.0
HTR POWER IN RODS 30,31	0.0	0.0
HTR POWER IN RODS 24,25,27,28	-0.3	0.0
HTR POWER IN RODS 33,34	0.0	0.0
HTR POWER IN RODS 21,22,36,37	0.1	0.0
FLOWS		
TEST SECTION(TS) FLOW IN(GPM)	14.2	0.1
TS FLOW OUT(GPM)	14.2	0.1
TS BYPASS FLOW(GPM)	1.6	0.1
LOOP FLOW TOTAL(GPM)	14.4	0.2
RADIATOR AIR FLOW(CFM)	1.2	0.0
PRESSURES		
TS IN PRESS(PSIG)	15.4	0.1
TS OUT PRESS(PSIG)	6.2	0.1
PUMP OUT PRESS(PSIG)	10.6	0.0
TS LINE PRESS IN(PSIG)	14.2	0.1
EXP TANK ARGON PRESS(PSIG)	2.8	0.1
TS BYP LINE PRESS IN(PSIG)	15.6	0.1
TS BYP LINE PRESS OUT(PSIG)	9.8	0.1

Test 10, run 113 (continued)

INSTRUMENT	20-SEC AVG	STD DEV	NORMALIZED TEMP
LOOP THERMOCOUPLES			
TEST SECT INLET WELL(DEG F)	839.3	0.4	
TEST SECT OUTLET WELL(DEG F)	866.2	0.5	
PUMP IN PIPE WALL TC	851.7	4.3	
PUMP OUT PIPE WALL TC	829.2	1.0	
RAD IN PIPE WALL TC	857.3	0.6	
RAD OUT PIPE WALL TC	834.2	0.5	
HEATER INTERNAL THERMOCOUPLES			
HTR TC IN HTR 08,12AB IN(DEG F)	842.9	0.6	0.13
HTR TC IN HTR 13,12AB IN	1029.1	0.8	7.06
HTR TC IN HTR 18,12AB IN	838.2	0.3	-.04
HTR TC IN HTR 22,12AB IN	833.3	5.4	-.23
HTR TC IN HTR 08,12BC IN	843.7	0.5	0.16
HTR TC IN HTR 13,12BC IN	1032.7	1.1	7.19
HTR TC IN HTR 18,12BC IN	837.8	0.4	-.06
HTR TC IN HTR 22,12BC IN	837.8	1.1	-.06
HTR TC IN HTR 09,15AB IN	847.0	8.7	0.29
HTR TC IN HTR 10,15BC IN	840.4	0.5	0.04
HTR TC IN HTR 16,15BC IN	838.3	1.0	-.04
HTR TC IN HTR 25,15BC IN	858.4	0.8	0.71
HTR TC IN HTR 02,15.1 IN	845.2	0.4	0.22
HTR TC IN HTR 03,15.1 IN	848.4	0.8	0.34
HTR TC IN HTR 06,15.1 IN	850.3	0.9	0.41
HTR TC IN HTR 15,15.1 IN	867.5	1.1	1.05
HTR TC IN HTR 24,15.1 IN	845.9	0.9	0.24
HTR TC IN HTR 33,15.1 IN	839.1	0.3	-.01
HTR TC IN HTR 36,15.1 IN	837.0	0.6	-.09
HTR TC IN HTR 02,15.4 IN	852.5	3.3	0.49
HTR TC IN HTR 03,15.4 IN	865.5	1.2	0.97
HTR TC IN HTR 06,15.4 IN	858.1	1.3	0.70
HTR TC IN HTR 15,15.4 IN	859.1	1.8	0.74
HTR TC IN HTR 24,15.4 IN	846.2	0.9	0.26
HTR TC IN HTR 33,15.4 IN	839.2	0.6	-.00
HTR TC IN HTR 34,15.4 IN	823.6	37.2	-.59
HTR TC IN HTR 36,15.4 IN	836.1	0.4	-.12
HTR TC IN HTR 02,15.6 IN	849.3	0.5	0.37
HTR TC IN HTR 03,15.6 IN	860.4	0.8	0.78
HTR TC IN HTR 06,15.6 IN	857.8	1.4	0.69
HTR TC IN HTR 15,15.6 IN	861.5	2.0	0.83
HTR TC IN HTR 24,15.6 IN	846.2	1.2	0.25
HTR TC IN HTR 33,15.6 IN	839.2	0.5	-.00
HTR TC IN HTR 34,15.6 IN	836.9	5.3	-.09
HTR TC IN HTR 36,15.6 IN	835.9	0.4	-.13
HTR TC IN HTR 03,15.9 IN	860.1	1.0	0.77
HTR TC IN HTR 06,15.9 IN	852.8	1.9	0.50
HTR TC IN HTR 15,15.9 IN	856.2	1.3	0.63
HTR TC IN HTR 24,15.9 IN	844.7	0.5	0.20
HTR TC IN HTR 33,15.9 IN	836.1	0.4	-.12
HTR TC IN HTR 34,15.9 IN	838.0	0.4	-.05
HTR TC IN HTR 36,15.9 IN	835.3	2.4	-.15

Test 10, run 113 (continued)

INSTRUMENT	20-SEC AVG	STD DEV	NORMALIZED TEMP
HTR TC IN HTR 04,16.1 IN	893.9	1.5	2.03
HTR TC IN HTR 05,16.1 IN	908.3	0.9	2.57
HTR TC IN HTR 07,16.1 IN	845.9	0.5	0.24
HTR TC IN HTR 21,16.1 IN	839.1	0.5	-.01
HTR TC IN HTR 27,16.1 IN	925.0	1.5	3.19
HTR TC IN HTR 04,16.4 IN	897.0	1.7	2.15
HTR TC IN HTR 05,16.4 IN	897.1	1.9	2.15
HTR TC IN HTR 07,16.4 IN	845.1	0.2	0.21
HTR TC IN HTR 21,16.4 IN	838.2	1.0	-.04
HTR TC IN HTR 27,16.4 IN	926.3	1.2	3.24
HTR TC IN HTR 04,16.6 IN	909.4	1.6	2.61
HTR TC IN HTR 05,16.6 IN	883.9	0.6	1.66
HTR TC IN HTR 07,16.6 IN	846.1	0.6	0.25
HTR TC IN HTR 21,16.6 IN	840.1	1.0	0.03
HTR TC IN HTR 27,16.6 IN	941.9	1.2	3.82
HTR TC IN HTR 04,16.9 IN	911.4	1.0	2.68
HTR TC IN HTR 07,16.9 IN	848.4	0.6	0.34
HTR TC IN HTR 21,16.9 IN	839.4	1.4	0.00
HTR TC IN HTR 27,16.9 IN	942.4	1.9	3.83
HTR TC IN HTR 11,18AB IN	862.3	1.5	0.86
HTR TC IN HTR 12,18AB IN	960.6	1.3	4.51
HTR TC IN HTR 14,18AB IN	862.5	1.4	0.86
HTR TC IN HTR 30,18AB IN	849.0	7.3	0.36
HTR TC IN HTR 11,18BC IN	863.4	0.9	0.90
HTR TC IN HTR 12,18BC IN	963.7	0.5	4.63
HTR TC IN HTR 14,18BC IN	871.8	4.1	1.21
HTR TC IN HTR 17,18BC IN	839.3	0.3	-.00
HTR TC IN HTR 30,18BC IN	844.5	7.6	0.19
WIRE WRAP THERMOCOUPLES			
WW TC ON HTR 12,-1 IN(DEG F)	845.8	5.2	0.24
WW TC ON HTR 16,-1 IN	839.6	0.6	0.01
WW TC ON HTR 12,01 IN	848.2	0.8	0.33
WW TC ON HTR 16,09 IN	843.8	0.6	0.17
WW TC ON HTR 04,11 IN	858.1	0.7	0.70
WW TC ON HTR 05,11 IN	868.7	0.5	1.09
WW TC ON HTR 13,11 IN	970.7	0.6	4.89
WW TC ON HTR 17,11 IN	842.0	0.4	0.10
WW TC ON HTR 28,11 IN	921.7	1.3	3.07
WW TC ON HTR 31,11 IN	841.6	0.9	0.08
WW TC ON HTR 03,13 IN	843.3	1.5	0.15
WW TC ON HTR 13,13 IN	982.4	0.5	5.32
WW TC ON HTR 15,13 IN	842.2	0.5	0.11
WW TC ON HTR 17,13 IN	841.7	0.3	0.09
WW TC ON HTR 22,13 IN	843.8	0.5	0.17
WW TC ON HTR 01,15 IN	867.9	0.5	1.06
WW TC ON HTR 03,15 IN	865.9	1.3	0.99
WW TC ON HTR 08,15 IN	838.0	1.1	-.05
WW TC ON HTR 10,15 IN	848.9	0.4	0.36
WW TC ON HTR 15,15 IN	844.8	0.4	0.20
WW TC ON HTR 19,15 IN	844.9	0.3	0.21

Test 10, run 113 (continued)

INSTRUMENT	20-SEC AVG	STD DEV	NORMALIZED TEMP
WW TC ON HTR 25.15 IN	872.8	1.5	1.25
WW TC ON HTR 36.15 IN	840.2	1.0	0.03
WW TC ON HTR 01.17 IN	910.8	0.8	2.66
WW TC AJ HTR 02.17 IN	846.2	0.8	0.26
WW TC OP HTR 02.17 IN	847.5	0.4	0.30
WW TC ON HTR 08.17 IN	841.3	0.5	0.07
WW TC ON HTR 10.17 IN	849.7	0.7	0.39
WW TC ON HTR 11.17 IN	871.8	0.6	1.21
WW TC ON HTR 18.17 IN	844.1	0.4	0.18
WW TC ON HTR 19.17 IN	844.9	0.3	0.21
WW TC ON HTR 21.17 IN	844.6	0.4	0.20
WW TC ON HTR 22.17 IN	848.9	0.4	0.36
WW TC ON HTR 33.17 IN	840.3	0.5	0.04
WW TC ON HTR 37.17 IN	839.8	1.1	0.02
WW TC ON HTR 06.19 IN	863.4	0.6	0.90
WW TC AJ HTR 07.19 IN	846.3	0.6	0.26
WW TC OP HTR 07.19 IN	847.4	0.5	0.30
WW TC ON HTR 09.19 IN	844.0	0.9	0.17
WW TC ON HTR 14.19 IN	925.3	0.8	3.20
WW TC ON HTR 18.19 IN	844.2	0.4	0.18
WW TC ON HTR 27.19 IN	874.6	0.4	1.31
WW TC ON HTR 30.19 IN	847.9	0.4	0.32
WW TC ON HTR 34.19 IN	836.2	0.9	-.12
WW TC ON HTR 36.19 IN	840.7	1.0	0.05
WW TC ON HTR 37.19 IN	840.7	0.8	0.05
WW TC ON HTR 05.21 IN	941.4	0.5	3.80
WW TC ON HTR 06.21 IN	859.5	0.5	0.75
WW TC ON HTR 21.21 IN	850.5	0.5	0.42
WW TC ON HTR 24.21 IN	865.6	0.4	0.98
WW TC ON HTR 25.21 IN	870.4	1.0	1.16
WW TC ON HTR 27.21 IN	909.2	0.5	2.60
WW TC ON HTR 30.21 IN	850.1	0.5	0.40
WW TC ON HTR 33.21 IN	838.5	1.2	-.03
WW TC ON HTR 34.21 IN	836.4	1.0	-.11
WW TC ON HTR 04.23 IN	897.6	1.9	2.17
WW TC ON HTR 09.23 IN	845.0	0.6	0.21
WW TC ON HTR 14.23 IN	884.6	0.4	1.68
WW TC ON HTR 24.23 IN	863.9	0.4	0.91
WW TC ON HTR 28.23 IN	923.7	0.9	3.14
WW TC ON HTR 31.23 IN	844.4	0.6	0.19
WW TC ON ROD 01.25 IN	870.1	0.4	1.15
WW TC ON ROD 02.25 IN	842.9	0.4	0.13
WW TC ON ROD 05.25 IN	882.6	0.4	1.61
WW TC ON ROD 08.25 IN	842.5	0.1	0.12
WW TC ON ROD 14.25 IN	859.5	0.8	0.75
WW TC ON ROD 04.27 IN	956.9	0.5	4.38
WW TC ON ROD 07.27 IN	856.5	1.2	0.64
WW TC ON ROD 12.27 IN	909.0	0.9	2.59
WW TC ON ROD 16.27 IN	844.2	0.2	0.18
WW TC ON ROD 18.27 IN	842.4	0.3	0.12
WW TC ON ROD 03.29 IN	890.5	0.2	1.90
WW TC ON ROD 06.29 IN	880.3	0.4	1.53

Test 10, run 113 (continued)

INSTRUMENT	20-SEC AVG	STD DEV	NORMALIZED TEMP
WW TC ON ROD 10.29 IN	868.8	1.0	1.10
WW TC ON ROD 01.37 IN	859.0	0.4	0.73
WW TC ON ROD 02.37 IN	846.5	0.3	0.27
WW TC ON ROD 08.37 IN	845.0	0.1	0.21
WW TC ON ROD 14.37 IN	876.5	0.3	1.38
WW TC ON ROD 04.51 IN	891.0	0.4	1.92
WW TC ON ROD 07.51 IN	856.6	0.5	0.64
WW TC ON ROD 12.51 IN	889.5	0.3	1.87
WW TC ON ROD 16.51 IN	850.8	0.2	0.43
WW TC ON ROD 18.51 IN	847.5	0.1	0.30
WW TC ON ROD 03.63 IN	877.6	0.4	1.42
WW TC ON ROD 06.63 IN	856.7	0.2	0.65
WW TC ON ROD 10.63 IN	881.8	0.4	1.58
DUCT THERMOCOUPLES			
DUCT WALL TC,CH 38.19 IN(DEG F)	872.0	1.0	1.21
DUCT WALL TC,CH 53.19 IN	837.7	0.3	-.06
DUCT WALL TC,CH 28.21 IN	840.4	0.4	0.04
DUCT WALL TC,CH 43.21 IN	845.6	1.0	0.23
DUCT WALL TC,CH 44.21 IN	842.5	0.5	0.12
TEST SECTION HOUSING THERMOCOUPLES			
TS SHELL-BOT(DEG F)	840.3	0.6	
TS GUARD HTR-BOT	805.4	0.4	
TS HTR-BOT	752.1	0.4	
TS SHELL-LOW CTR	851.8	0.3	
TS GUARD HTR-LOW CTR	850.3	0.8	
TS HTR-LOW CTR	771.9	0.7	
TS SHELL-UP CTR	869.6	0.4	
TS GUARD HTR-UP CTR	874.3	0.7	
TS HTR-UP CTR	846.2	1.1	
TS SHELL-TOP	869.8	0.9	
TS GUARD HTR-TOP	871.2	1.5	
TS HTR-TOP	863.5	1.1	
REFERENCE BOX THERMOCOUPLES			
150 DEG REF BOX 1(DEG F)	148.2	1.2	
150 DEG REF BOX 2	148.2	0.7	
150 DEG REF BOX 3	151.7	0.8	
150 DEG REF BOX 4	149.4	0.5	
150 DEG REF BOX 5	147.0	0.2	
MISCELLANEOUS			
SOD PUMP SPEED(RPM)	678.4	9.8	
EXPANSION TANK LEVEL(% FULL)	75.3	0.1	

TEST SERIES 10(BUNDLE 3C); TEST 10 RUN 114 01/16/78 13 24 58

CONDITIONS:
TEST SECTION FLOW: 0.90 L/S (14.2 GPM)
TEST SECTION POWER
(1 ROD HEATED): 14.7 KW (27.5 KW/M/ROD)(8.4 KW/FT/ROD)

TEST SECTION INLET TEMPERATURE: 450 DEG C (841 DEG F)
TEST SECTION OUTLET TEMPERATURE: 464 DEG C (868 DEG F)

HEAT BALANCE:

HEAT INPUT FROM 31 FUEL PIN SIMULATORS: 14.7 KW
HEAT ABSORBED BY SODIUM=
FLOW X SP.HEAT X (TS OUT TEMP - TS IN TEMP) 14.3 KW
% OF INPUT HEAT ACCOUNTED FOR: 97.8 %

INSTRUMENT	20-SEC AVG	STD DEV
HEATER POWERS(KW)		
HTR POWER IN ROD 14	14.7	0.0
HTR POWER IN RODS 8,9,10	0.1	0.0
HTR POWER IN RODS 2,15,16	0.1	0.0
HTR POWER IN RODS 1,3,11,19	0.0	0.0
HTR POWER IN RODS 5,6,13,17	0.1	0.0
HTR POWER IN RODS 4,7,12,18	0.0	0.0
HTR POWER IN RODS 30,31	0.0	0.0
HTR POWER IN RODS 24,25,27,28	-0.3	0.0
HTR POWER IN RODS 33,34	0.0	0.0
HTR POWER IN RODS 21,22,36,37	0.0	0.0
FLOWS		
TEST SECTION(TS) FLOW IN(GPM)	14.2	0.1
TS FLOW OUT(GPM)	14.3	0.1
TS BYPASS FLOW(GPM)	0.1	0.1
LOOP FLOW TOTAL(GPM)	14.4	0.2
RADIATOR AIR FLOW(CFM)	1.2	0.0
PRESSURES		
TS IN PRESS(PSIG)	15.4	0.1
TS OUT PRESS(PSIG)	6.2	0.1
PUMP OUT PRESS(PSIG)	10.7	0.1
TS LINE PRESS IN(PSIG)	14.2	0.1
EXP TANK ARGON PRESS(PSIG)	2.8	0.1
TS BYP LINE PRESS IN(PSIG)	15.6	0.1
TS BYP LINE PRESS OUT(PSIG)	9.9	0.1

Test 10, run 114 (continued)

INSTRUMENT	20-SEC AVG	STD DEV	NORMALIZED TEMP
LOOP THERMOCOUPLES			
TEST SECT INLET WELL(DEG F)	842.0	0.4	
TEST SECT OUTLET WELL(DEG F)	868.8	0.4	
PUMP IN PIPE WALL TC	855.2	4.6	
PUMP OUT PIPE WALL TC	833.0	1.4	
RAD IN PIPE WALL TC	858.4	0.5	
RAD OUT PIPE WALL TC	837.6	0.4	
HEATER INTERNAL THERMOCOUPLES			
HTR TC IN HTR 08,12AB IN(DEG F)	843.9	0.4	0.07
HTR TC IN HTR 13,12AB IN	910.7	0.5	2.56
HTR TC IN HTR 18,12AB IN	840.7	0.3	-.05
HTR TC IN HTR 22,12AB IN	840.2	0.4	-.07
HTR TC IN HTR 08,12BC IN	845.0	0.2	0.11
HTR TC IN HTR 13,12BC IN	907.4	0.5	2.44
HTR TC IN HTR 18,12BC IN	840.0	0.3	-.07
HTR TC IN HTR 22,12BC IN	839.7	0.9	-.08
HTR TC IN HTR 09,15AB IN	833.1	8.8	-.33
HTR TC IN HTR 10,15BC IN	840.9	0.3	-.04
HTR TC IN HTR 16,15BC IN	843.1	0.5	0.04
HTR TC IN HTR 25,15BC IN	848.6	0.9	0.25
HTR TC IN HTR 02,15.1 IN	845.1	0.3	0.12
HTR TC IN HTR 03,15.1 IN	845.1	0.2	0.12
HTR TC IN HTR 06,15.1 IN	850.4	0.7	0.32
HTR TC IN HTR 15,15.1 IN	902.9	1.0	2.27
HTR TC IN HTR 24,15.1 IN	840.8	0.2	-.04
HTR TC IN HTR 33,15.1 IN	842.1	0.4	0.01
HTR TC IN HTR 36,15.1 IN	839.3	0.3	-.10
HTR TC IN HTR 02,15.4 IN	843.9	0.6	0.07
HTR TC IN HTR 03,15.4 IN	851.0	0.5	0.34
HTR TC IN HTR 06,15.4 IN	853.8	0.8	0.44
HTR TC IN HTR 15,15.4 IN	871.2	0.5	1.09
HTR TC IN HTR 24,15.4 IN	842.7	0.3	0.03
HTR TC IN HTR 33,15.4 IN	844.0	0.4	0.07
HTR TC IN HTR 34,15.4 IN	765.2	1.7	****
HTR TC IN HTR 36,15.4 IN	839.1	0.3	-.11
HTR TC IN HTR 02,15.6 IN	846.3	0.4	0.16
HTR TC IN HTR 03,15.6 IN	847.3	0.4	0.20
HTR TC IN HTR 06,15.6 IN	854.0	0.5	0.45
HTR TC IN HTR 15,15.6 IN	860.7	0.9	0.70
HTR TC IN HTR 24,15.6 IN	842.6	0.4	0.03
HTR TC IN HTR 33,15.6 IN	842.6	0.4	0.03
HTR TC IN HTR 34,15.6 IN	849.3	1.8	0.27
HTR TC IN HTR 36,15.6 IN	839.1	0.4	-.11
HTR TC IN HTR 03,15.9 IN	847.5	0.3	0.21
HTR TC IN HTR 06,15.9 IN	851.8	0.5	0.37
HTR TC IN HTR 15,15.9 IN	867.1	0.5	0.94
HTR TC IN HTR 24,15.9 IN	841.4	0.4	-.02
HTR TC IN HTR 33,15.9 IN	839.9	0.4	-.08
HTR TC IN HTR 34,15.9 IN	839.7	0.5	-.08
HTR TC IN HTR 36,15.9 IN	841.3	1.0	-.02

Test 10, run 114 (continued)

INSTRUMENT	20-SEC AVG	STD DEV	NORMALIZED TEMP
HTR TC IN HTR 04,16.1 IN	856.8	0.4	0.55
HTR TC IN HTR 05,16.1 IN	873.5	0.4	1.17
HTR TC IN HTR 07,16.1 IN	846.8	0.4	0.18
HTR TC IN HTR 21,16.1 IN	840.5	0.4	-.05
HTR TC IN HTR 27,16.1 IN	884.7	1.2	1.59
HTR TC IN HTR 04,16.4 IN	853.7	0.4	0.44
HTR TC IN HTR 05,16.4 IN	872.1	0.5	1.13
HTR TC IN HTR 07,16.4 IN	846.3	0.5	0.16
HTR TC IN HTR 21,16.4 IN	842.6	0.3	0.02
HTR TC IN HTR 27,16.4 IN	883.1	0.8	1.53
HTR TC IN HTR 04,16.6 IN	862.1	0.4	0.75
HTR TC IN HTR 05,16.6 IN	868.5	0.4	0.99
HTR TC IN HTR 07,16.6 IN	846.8	0.4	0.18
HTR TC IN HTR 21,16.6 IN	839.8	0.5	-.08
HTR TC IN HTR 27,16.6 IN	882.9	0.6	1.53
HTR TC IN HTR 04,16.9 IN	860.3	0.5	0.69
HTR TC IN HTR 07,16.9 IN	847.3	0.5	0.20
HTR TC IN HTR 21,16.9 IN	838.4	0.8	-.13
HTR TC IN HTR 27,16.9 IN	882.4	0.5	1.51
HTR TC IN HTR 11,18AB IN	846.6	0.4	0.17
HTR TC IN HTR 12,18AB IN	867.6	0.5	0.96
HTR TC IN HTR 14,18AB IN	1031.7	2.1	7.08
HTR TC IN HTR 30,18AB IN	897.8	7.4	2.08
HTR TC IN HTR 11,18BC IN	844.7	0.4	0.10
HTR TC IN HTR 12,18BC IN	868.8	0.4	1.00
HTR TC IN HTR 14,18BC IN	1041.1	4.7	7.43
HTR TC IN HTR 17,18BC IN	841.7	0.3	-.01
HTR TC IN HTR 30,18BC IN	871.5	7.4	1.10
WIRE WRAP THERMOCOUPLES			
WW TC ON HTR 12,-1 IN(DEG F)	848.6	3.8	0.25
WW TC ON HTR 16,-1 IN	842.4	0.4	0.02
WW TC ON HTR 12,01 IN	843.0	0.4	0.04
WW TC ON HTR 16,09 IN	846.9	0.5	0.19
WW TC ON HTR 04,11 IN	847.7	0.5	0.21
WW TC ON HTR 05,11 IN	855.5	0.4	0.51
WW TC ON HTR 13,11 IN	872.5	0.6	1.14
WW TC ON HTR 17,11 IN	843.9	0.4	0.07
WW TC ON HTR 28,11 IN	944.4	0.4	3.82
WW TC ON HTR 31,11 IN	848.6	0.4	0.25
WW TC ON HTR 03,13 IN	843.1	0.7	0.04
WW TC ON HTR 13,13 IN	956.2	0.5	4.26
WW TC ON HTR 15,13 IN	854.0	0.4	0.45
WW TC ON HTR 17,13 IN	843.6	0.5	0.06
WW TC ON HTR 22,13 IN	845.5	0.5	0.13
WW TC ON HTR 01,15 IN	861.0	0.4	0.71
WW TC ON HTR 03,15 IN	852.3	0.3	0.39
WW TC ON HTR 08,15 IN	840.7	1.2	-.05
WW TC ON HTR 10,15 IN	843.8	0.4	0.07
WW TC ON HTR 15,15 IN	865.7	0.3	0.89
WW TC ON HTR 19,15 IN	847.4	0.3	0.20

Test 10, run 114 (continued)

INSTRUMENT	20-SEC AVG	STD DEV	NORMALIZED TEMP
WW TC ON HTR 25,15 IN	872.1	0.5	1.12
WW TC ON HTR 36,15 IN	842.9	1.0	0.03
WW TC ON HTR 01,17 IN	864.7	0.5	0.85
WW TC AJ HTR 02,17 IN	846.7	0.4	0.18
WW TC OP HTR 02,17 IN	846.3	0.5	0.16
WW TC ON HTR 08,17 IN	844.5	0.4	0.09
WW TC ON HTR 10,17 IN	845.0	0.2	0.11
WW TC ON HTR 11,17 IN	853.3	0.5	0.42
WW TC ON HTR 18,17 IN	846.5	0.5	0.17
WW TC ON HTR 19,17 IN	846.4	0.5	0.17
WW TC ON HTR 21,17 IN	846.2	0.6	0.16
WW TC ON HTR 22,17 IN	847.3	0.4	0.20
WW TC ON HTR 33,17 IN	843.9	0.4	0.07
WW TC ON HTR 37,17 IN	842.8	1.5	0.03
WW TC ON HTR 06,19 IN	871.7	0.5	1.11
WW TC AJ HTR 07,19 IN	846.8	0.4	0.18
WW TC OP HTR 07,19 IN	847.6	0.3	0.21
WW TC ON HTR 09,19 IN	845.1	0.3	0.12
WW TC ON HTR 14,19 IN	1007.6	0.3	6.18
WW TC ON HTR 18,19 IN	845.9	0.5	0.15
WW TC ON HTR 27,19 IN	896.5	0.4	2.03
WW TC ON HTR 30,19 IN	904.5	0.4	2.33
WW TC ON HTR 34,19 IN	839.2	1.0	-.10
WW TC ON HTR 36,19 IN	843.0	0.8	0.04
WW TC ON HTR 37,19 IN	843.1	0.9	0.04
WW TC ON HTR 05,21 IN	902.7	0.4	2.26
WW TC ON HTR 06,21 IN	862.5	0.5	0.77
WW TC ON HTR 21,21 IN	849.1	0.3	0.27
WW TC ON HTR 24,21 IN	867.2	0.3	0.94
WW TC ON HTR 25,21 IN	872.8	0.6	1.15
WW TC ON HTR 27,21 IN	896.9	0.4	2.05
WW TC ON HTR 30,21 IN	924.7	0.6	3.09
WW TC ON HTR 33,21 IN	842.5	1.3	0.02
WW TC ON HTR 34,21 IN	839.6	1.0	-.09
WW TC ON HTR 04,23 IN	861.3	0.5	0.72
WW TC ON HTR 09,23 IN	844.6	0.4	0.10
WW TC ON HTR 14,23 IN	962.2	0.5	4.48
WW TC ON HTR 24,23 IN	862.6	0.4	0.77
WW TC ON HTR 28,23 IN	954.7	0.5	4.20
WW TC ON HTR 31,23 IN	851.2	0.5	0.35
WW TC ON ROD 01,25 IN	870.4	0.4	1.06
WW TC ON ROD 02,25 IN	844.1	0.2	0.08
WW TC ON ROD 05,25 IN	928.6	0.3	3.23
WW TC ON ROD 08,25 IN	844.8	0.4	0.10
WW TC ON ROD 14,25 IN	892.2	0.5	1.88
WW TC ON ROD 04,27 IN	920.2	0.1	2.92
WW TC ON ROD 07,27 IN	858.2	1.3	0.61
WW TC ON ROD 12,27 IN	909.8	0.9	2.53
WW TC ON ROD 16,27 IN	853.8	0.4	0.44
WW TC ON ROD 18,27 IN	846.2	0.4	0.16
WW TC ON ROD 03,29 IN	864.1	0.3	0.83
WW TC ON ROD 06,29 IN	897.1	0.2	2.06

Test 10, run 114 (continued)

INSTRUMENT	20-SEC AVG	STD DEV	NORMALIZED TEMP
WW TC ON ROD 10,29 IN	864.6	1.2	0.85
WW TC ON ROD 01,37 IN	858.9	0.3	0.63
WW TC ON ROD 02,37 IN	845.8	0.5	0.14
WW TC ON ROD 08,37 IN	847.6	0.3	0.21
WW TC ON ROD 14,37 IN	899.4	0.4	2.14
WW TC ON ROD 04,51 IN	892.2	0.2	1.87
WW TC ON ROD 07,51 IN	858.3	0.5	0.61
WW TC ON ROD 12,51 IN	896.3	0.3	2.03
WW TC ON ROD 16,51 IN	859.0	0.4	0.64
WW TC ON ROD 18,51 IN	851.6	0.2	0.36
WW TC ON ROD 03,63 IN	872.6	0.4	1.14
WW TC ON ROD 06,63 IN	864.9	0.2	0.86
WW TC ON ROD 10,63 IN	876.0	0.4	1.27
DUCT THERMOCOUPLES			
DUCT WALL TC,CH 38,19 IN(DEG F)	882.2	0.9	1.50
DUCT WALL TC,CH 53,19 IN	841.7	0.1	-.01
DUCT WALL TC,CH 28,21 IN	842.0	0.4	0.00
DUCT WALL TC,CH 43,21 IN	886.9	0.9	1.68
DUCT WALL TC,CH 44,21 IN	856.0	0.4	0.52
TEST SECTION HOUSING THERMOCOUPLES			
TS SHELL-BOT(DEG F)	842.6	0.5	
TS GUARD HTR-BOT	809.9	0.6	
TS HTR-BOT	757.1	0.6	
TS SHELL-LOW CTR	862.0	0.7	
TS GUARD HTR-LOW CTR	858.8	1.1	
TS HTR-LOW CTR	777.4	0.6	
TS SHELL-UP CTR	873.6	0.8	
TS GUARD HTR-UP CTR	877.5	0.8	
TS HTR-UP CTR	847.8	0.8	
TS SHELL-TOP	874.9	1.2	
TS GUARD HTR-TOP	874.0	1.5	
TS HTR-TOP	865.5	1.7	
REFERENCE BOX THERMOCOUPLES			
150 DEG REF BOX 1(DEG F)	148.4	1.2	
150 DEG REF BOX 2	148.9	0.9	
150 DEG REF BOX 3	151.8	0.9	
150 DEG REF BOX 4	149.6	0.5	
150 DEG REF BOX 5	148.0	0.3	
MISCELLANEOUS			
SOD PUMP SPEED(RPM)	680.4	5.0	
EXPANSION TANK LEVEL(% FULL)	75.1	0.2	

TEST SERIES 10(BUNDLE 3C); TEST 10 RUN 115 01/17/78 9 21 58

CONDITIONS:

TEST SECTION FLOW: 0.91 L/S (14.3 GPM)

TEST SECTION POWER
(1 ROD HEATED): 15.0 KW (28.1 KW/M/ROD)(8.6 KW/FT/ROD)

TEST SECTION INLET TEMPERATURE: 450 DEG C (842 DEG F)

TEST SECTION OUTLET TEMPERATURE: 465 DEG C (869 DEG F)

HEAT BALANCE:

HEAT INPUT FROM 31 FUEL PIN SIMULATORS: 15.0 KW

HEAT ABSORBED BY SODIUM=
FLOW X SP.HEAT X (TS OUT TEMP - TS IN TEMP) 14.6 KW

% OF INPUT HEAT ACCOUNTED FOR: 97.6 %

INSTRUMENT	20-SEC AVG	STD DEV
HEATER POWERS(KW)		
HTR POWER IN ROD 15	15.0	0.0
HTR POWER IN RODS 8,9,10	0.1	0.0
HTR POWER IN RODS 2,14,16	0.0	0.0
HTR POWER IN RODS 1,3,11,19	0.0	0.0
HTR POWER IN RODS 5,6,13,17	0.1	0.0
HTR POWER IN RODS 4,7,12,18	-0.0	0.0
HTR POWER IN RODS 30,31	0.0	0.0
HTR POWER IN RODS 24,25,27,28	-0.3	0.0
HTR POWER IN RODS 33,34	-0.0	0.0
HTR POWER IN RODS 21,22,36,37	0.0	0.0
FLOWS		
TEST SECTION(TS) FLOW IN(GPM)	14.3	0.1
TS FLOW OUT(GPM)	14.4	0.1
TS BYPASS FLOW(GPM)	0.1	0.1
LOOP FLOW TOTAL(GPM)	14.5	0.1
RADIATOR AIR FLOW(CFM)	1.2	0.0
PRESSURES		
TS IN PRESS(PSIG)	15.2	0.1
TS OUT PRESS(PSIG)	6.1	0.1
PUMP OUT PRESS(PSIG)	10.4	0.1
TS LINE PRESS IN(PSIG)	14.1	0.1
EXP TANK ARGON PRESS(PSIG)	2.5	0.1
TS BYP LINE PRESS IN(PSIG)	15.3	0.1
TS BYP LINE PRESS OUT(PSIG)	9.6	0.1

Test 10, run 115 (continued)

INSTRUMENT	20-SEC AVG	STD DEV	NORMALIZED TEMP
LOOP THERMOCOUPLES			
TEST SECT INLET WELL(DEG F)	842.6	0.3	
TEST SECT OUTLET WELL(DEG F)	869.6	0.4	
PUMP IN PIPE WALL TC	855.2	4.5	
PUMP OUT PIPE WALL TC	833.5	0.9	
RAD IN PIPE WALL TC	858.6	0.5	
RAD OUT PIPE WALL TC	837.7	0.5	
HEATER INTERNAL THERMOCOUPLES			
HTR TC IN HTR 08,12AB IN(DEG F)	844.6	0.6	0.08
HTR TC IN HTR 13,12AB IN	855.0	0.8	0.46
HTR TC IN HTR 18,12AB IN	840.4	0.4	-.08
HTR TC IN HTR 22,12AB IN	832.9	9.6	-.36
HTR TC IN HTR 08,12BC IN	844.4	0.5	0.07
HTR TC IN HTR 13,12BC IN	854.2	0.9	0.43
HTR TC IN HTR 18,12BC IN	842.0	0.7	-.02
HTR TC IN HTR 22,12BC IN	840.6	1.0	-.07
HTR TC IN HTR 09,15AB IN	833.8	8.8	-.32
HTR TC IN HTR 10,15BC IN	840.4	0.9	-.08
HTR TC IN HTR 16,15BC IN	859.2	0.9	0.61
HTR TC IN HTR 25,15BC IN	841.0	1.0	-.06
HTR TC IN HTR 02,15.1 IN	847.6	0.4	0.19
HTR TC IN HTR 03,15.1 IN	848.4	0.8	0.22
HTR TC IN HTR 06,15.1 IN	869.4	2.1	0.99
HTR TC IN HTR 15,15.1 IN	1059.5	1.5	8.01
HTR TC IN HTR 24,15.1 IN	840.4	0.6	-.08
HTR TC IN HTR 33,15.1 IN	854.7	0.7	0.45
HTR TC IN HTR 36,15.1 IN	839.9	0.5	-.10
HTR TC IN HTR 02,15.4 IN	849.5	2.5	0.26
HTR TC IN HTR 03,15.4 IN	849.0	1.3	0.24
HTR TC IN HTR 06,15.4 IN	860.2	2.3	0.65
HTR TC IN HTR 15,15.4 IN	1003.8	1.4	5.96
HTR TC IN HTR 24,15.4 IN	839.3	0.6	-.12
HTR TC IN HTR 33,15.4 IN	855.0	0.9	0.46
HTR TC IN HTR 34,15.4 IN	858.9	73.5	0.61
HTR TC IN HTR 36,15.4 IN	839.4	0.5	-.12
HTR TC IN HTR 02,15.6 IN	849.2	0.3	0.25
HTR TC IN HTR 03,15.6 IN	851.9	0.8	0.34
HTR TC IN HTR 06,15.6 IN	861.7	2.0	0.71
HTR TC IN HTR 15,15.6 IN	997.3	1.8	5.72
HTR TC IN HTR 24,15.6 IN	839.8	0.7	-.10
HTR TC IN HTR 33,15.6 IN	852.6	1.6	0.37
HTR TC IN HTR 34,15.6 IN	846.2	8.9	0.14
HTR TC IN HTR 36,15.6 IN	839.2	0.4	-.12
HTR TC IN HTR 03,15.9 IN	849.4	0.5	0.25
HTR TC IN HTR 06,15.9 IN	864.9	2.1	0.83
HTR TC IN HTR 15,15.9 IN	1022.9	1.1	6.66
HTR TC IN HTR 24,15.9 IN	841.0	0.7	-.06
HTR TC IN HTR 33,15.9 IN	852.4	0.2	0.36
HTR TC IN HTR 34,15.9 IN	838.8	1.2	-.14
HTR TC IN HTR 36,15.9 IN	839.4	2.3	-.12

Test 10, run 115 (continued)

INSTRUMENT	20-SEC AVG	STD DEV	NORMALIZED TEMP
HTR TC IN HTR 04,16.1 IN	852.4	1.1	0.36
HTR TC IN HTR 05,16.1 IN	879.7	0.6	1.37
HTR TC IN HTR 07,16.1 IN	852.5	1.1	0.37
HTR TC IN HTR 21,16.1 IN	840.9	0.2	-.06
HTR TC IN HTR 27,16.1 IN	852.0	1.1	0.35
HTR TC IN HTR 04,16.4 IN	854.5	2.3	0.44
HTR TC IN HTR 05,16.4 IN	877.6	2.6	1.29
HTR TC IN HTR 07,16.4 IN	851.8	1.0	0.34
HTR TC IN HTR 21,16.4 IN	841.2	0.4	-.05
HTR TC IN HTR 27,16.4 IN	852.4	1.0	0.36
HTR TC IN HTR 04,16.6 IN	857.0	1.5	0.53
HTR TC IN HTR 05,16.6 IN	886.4	0.9	1.62
HTR TC IN HTR 07,16.6 IN	853.7	1.1	0.41
HTR TC IN HTR 21,16.6 IN	840.4	0.4	-.08
HTR TC IN HTR 27,16.6 IN	850.5	0.9	0.29
HTR TC IN HTR 04,16.9 IN	855.6	0.7	0.48
HTR TC IN HTR 07,16.9 IN	849.5	1.3	0.26
HTR TC IN HTR 21,16.9 IN	838.6	0.5	-.15
HTR TC IN HTR 27,16.9 IN	850.6	1.1	0.30
HTR TC IN HTR 11,18AB IN	844.4	0.7	0.07
HTR TC IN HTR 12,18AB IN	847.7	0.5	0.19
HTR TC IN HTR 14,18AB IN	906.2	9.5	2.35
HTR TC IN HTR 30,18AB IN	947.6	8.2	3.88
HTR TC IN HTR 11,18BC IN	845.0	0.6	0.09
HTR TC IN HTR 12,18BC IN	848.6	0.8	0.22
HTR TC IN HTR 14,18BC IN	938.0	13.0	3.53
HTR TC IN HTR 17,18BC IN	853.9	0.5	0.42
HTR TC IN HTR 30,18BC IN	956.9	6.5	4.22
WIRE WRAP THERMOCOUPLES			
WW TC ON HTR 12,-1 IN(DEG F)	843.2	3.3	0.02
WW TC ON HTR 16,-1 IN	845.3	0.8	0.10
WW TC ON HTR 12,01 IN	845.1	11.1	0.09
WW TC ON HTR 16,09 IN	884.0	1.0	1.53
WW TC ON HTR 04,11 IN	849.4	0.6	0.25
WW TC ON HTR 05,11 IN	863.0	0.4	0.75
WW TC ON HTR 13,11 IN	857.5	1.0	0.55
WW TC ON HTR 17,11 IN	844.6	0.4	0.08
WW TC ON HTR 28,11 IN	866.3	0.7	0.88
WW TC ON HTR 31,11 IN	898.0	2.4	2.05
WW TC ON HTR 03,13 IN	841.4	1.3	-.04
WW TC ON HTR 13,13 IN	874.1	2.3	1.16
WW TC ON HTR 15,13 IN	986.5	0.4	5.32
WW TC ON HTR 17,13 IN	846.8	0.5	0.16
WW TC ON HTR 22,13 IN	845.0	0.2	0.09
WW TC ON HTR 01,15 IN	874.3	0.7	1.17
WW TC ON HTR 03,15 IN	853.2	1.1	0.39
WW TC ON HTR 08,15 IN	842.0	1.1	-.02
WW TC ON HTR 10,15 IN	843.6	0.8	0.04
WW TC ON HTR 15,15 IN	1008.2	0.5	6.12

Test 10, run 115 (continued)

INSTRUMENT	20-SEC AVG	STD DEV	NORMALIZED TEMP
WW TC ON HTR 19,15 IN	848.2	0.5	0.21
WW TC ON HTR 25,15 IN	849.2	0.8	0.25
WW TC ON HTR 36,15 IN	843.2	0.9	0.02
WW TC ON HTR 01,17 IN	865.3	0.8	0.84
WW TC AJ HTR 02,17 IN	847.9	0.6	0.20
WW TC OP HTR 02,17 IN	848.3	0.3	0.21
WW TC ON HTR 08,17 IN	844.3	0.8	0.06
WW TC ON HTR 10,17 IN	844.5	0.6	0.07
WW TC ON HTR 11,17 IN	845.4	0.8	0.10
WW TC ON HTR 18,17 IN	849.0	0.4	0.24
WW TC ON HTR 19,17 IN	847.2	0.5	0.17
WW TC ON HTR 21,17 IN	845.3	0.4	0.10
WW TC ON HTR 22,17 IN	845.8	0.5	0.12
WW TC ON HTR 33,17 IN	851.9	1.1	0.34
WW TC ON HTR 37,17 IN	842.8	1.0	0.01
WW TC ON HTR 06,19 IN	919.8	1.2	2.85
WW TC AJ HTR 07,19 IN	850.1	0.5	0.28
WW TC OP HTR 07,19 IN	853.3	0.5	0.40
WW TC ON HTR 09,19 IN	844.7	0.6	0.08
WW TC ON HTR 14,19 IN	885.5	3.2	1.59
WW TC ON HTR 18,19 IN	848.2	0.5	0.21
WW TC ON HTR 27,19 IN	865.9	0.3	0.86
WW TC ON HTR 30,19 IN	902.9	0.5	2.23
WW TC ON HTR 34,19 IN	841.4	0.8	-.04
WW TC ON HTR 36,19 IN	843.8	0.7	0.04
WW TC ON HTR 37,19 IN	842.8	0.5	0.01
WW TC ON HTR 05,21 IN	894.0	0.3	1.90
WW TC ON HTR 06,21 IN	897.4	0.8	2.03
WW TC ON HTR 21,21 IN	846.8	0.4	0.16
WW TC ON HTR 24,21 IN	850.8	0.2	0.30
WW TC ON HTR 25,21 IN	851.2	0.6	0.32
WW TC ON HTR 27,21 IN	863.6	0.5	0.78
WW TC ON HTR 30,21 IN	960.4	0.4	4.35
WW TC ON HTR 33,21 IN	850.9	1.3	0.31
WW TC ON HTR 34,21 IN	840.6	0.9	-.07
WW TC ON HTR 04,23 IN	859.3	1.2	0.62
WW TC ON HTR 09,23 IN	844.3	0.8	0.06
WW TC ON HTR 14,23 IN	976.8	4.0	4.96
WW TC ON HTR 24,23 IN	849.9	0.3	0.27
WW TC ON HTR 28,23 IN	889.8	0.5	1.75
WW TC ON HTR 31,23 IN	887.2	2.2	1.65
WW TC ON ROD 01,25 IN	896.5	0.4	1.99
WW TC ON ROD 02,25 IN	848.1	0.4	0.20
WW TC ON ROD 05,25 IN	975.4	0.4	4.91
WW TC ON ROD 08,25 IN	844.1	0.2	0.06
WW TC ON ROD 14,25 IN	915.9	0.4	2.71
WW TC ON ROD 04,27 IN	882.9	0.4	1.49
WW TC ON ROD 07,27 IN	882.6	1.1	1.48
WW TC ON ROD 12,27 IN	872.7	0.9	1.11
WW TC ON ROD 16,27 IN	876.3	1.0	1.25
WW TC ON ROD 18,27 IN	849.9	0.2	0.27
WW TC ON ROD 03,29 IN	853.8	0.4	0.41
WW TC ON ROD 06,29 IN	933.0	0.5	3.34

Test 10, run 115 (continued)

INSTRUMENT	20-SEC AVG	STD DEV	NORMALIZED TEMP
WW TC ON ROD 10,29 IN	851.7	1.0	0.34
WW TC ON ROD 01,37 IN	874.2	0.4	1.17
WW TC ON ROD 02,37 IN	848.3	0.1	0.21
WW TC ON ROD 08,37 IN	846.7	0.1	0.15
WW TC ON ROD 14,37 IN	916.3	0.4	2.72
WW TC ON ROD 04,51 IN	887.2	0.2	1.65
WW TC ON ROD 07,51 IN	869.4	0.6	0.99
WW TC ON ROD 12,51 IN	883.7	0.3	1.52
WW TC ON ROD 16,51 IN	874.9	0.3	1.19
WW TC ON ROD 18,51 IN	855.0	0.3	0.46
WW TC ON ROD 03,63 IN	869.0	0.1	0.98
WW TC ON ROD 06,63 IN	881.0	0.4	1.42
WW TC ON ROD 10,63 IN	865.7	0.1	0.85
DUCT THERMOCOUPLES			
DUCT WALL TC,CH 38,19 IN(DEG F)	854.4	0.7	0.44
DUCT WALL TC,CH 53,19 IN	841.3	0.4	-.05
DUCT WALL TC,CH 28,21 IN	840.9	0.1	-.06
DUCT WALL TC,CH 43,21 IN	888.5	0.7	1.70
DUCT WALL TC,CH 44,21 IN	874.3	0.4	1.17
TEST SECTION HOUSING THERMOCOUPLES			
TS SHELL-BOT(DEG F)	843.0	0.4	
TS GUARD HTR-BOT	808.1	0.5	
TS HTR-BOT	754.9	0.6	
TS SHELL-LOW CTR	855.1	0.3	
TS GUARD HTR-LOW CTR	854.3	0.7	
TS HTR-LOW CTR	775.4	0.5	
TS SHELL-UP CTR	876.4	0.4	
TS GUARD HTR-UP CTR	875.9	0.6	
TS HTR-UP CTR	844.8	0.7	
TS SHELL-TOP	875.2	0.7	
TS GUARD HTR-TOP	872.0	1.3	
TS HTR-TOP	861.5	1.0	
REFERENCE BOX THERMOCOUPLES			
150 DEG REF BOX 1(DEG F)	147.9	1.0	
150 DEG REF BOX 2	148.8	0.6	
150 DEG REF BOX 3	151.5	0.6	
150 DEG REF BOX 4	149.5	0.5	
150 DEG REF BOX 5	147.1	0.3	
MISCELLANEOUS			
SOD PUMP SPEED(RPM)	687.2	28.9	
EXPANSION TANK LEVEL(% FULL)	74.7	0.2	

TEST SERIES 10(BUNDLE 3C); TEST 10 RUN 116 01/17/78 9 46 58

CONDITIONS:

TEST SECTION FLOW: 0.92 L/S (14.5 GPM)

TEST SECTION POWER
(1 ROD HEATED): 14.4 KW (26.9 KW/M/ROD)(8.2 KW/FT/ROD)

TEST SECTION INLET TEMPERATURE: 451 DEG C (844 DEG F)

TEST SECTION OUTLET TEMPERATURE: 466 DEG C (871 DEG F)

HEAT BALANCE:

HEAT INPUT FROM 31 FUEL PIN SIMULATORS: 14.4 KW

HEAT ABSORBED BY SODIUM=
FLOW X SP.HEAT X (TS OUT TEMP - TS IN TEMP) 14.4 KW

% OF INPUT HEAT ACCOUNTED FOR: 100.2 %

INSTRUMENT	20-SEC AVG	STD DEV
HEATER POWERS(KW)		
HTR POWER IN ROD 16	14.4	0.0
HTR POWER IN RODS 8,9,10	0.1	0.0
HTR POWER IN RODS 2,14,15	0.0	0.0
HTR POWER IN RODS 1,3,11,19	0.0	0.0
HTR POWER IN RODS 5,6,13,17	0.1	0.0
HTR POWER IN RODS 4,7,12,18	-0.0	0.0
HTR POWER IN RODS 30,31	-0.0	0.0
HTR POWER IN RODS 24,25,27,28	-0.3	0.0
HTR POWER IN RODS 33,34	-0.0	0.0
HTR POWER IN RODS 21,22,36,37	0.0	0.0
FLOWS		
TEST SECTION(TS) FLOW IN(GPM)	14.5	0.1
TS FLOW OUT(GPM)	14.5	0.1
TS BYPASS FLOW(GPM)	0.8	0.1
LOOP FLOW TOTAL(GPM)	14.5	0.1
RADIATOR AIR FLOW(CFM)	1.2	0.0
PRESSURES		
TS IN PRESS(PSIG)	15.2	0.1
TS OUT PRESS(PSIG)	6.1	0.1
PUMP OUT PRESS(PSIG)	10.4	0.1
TS LINE PRESS IN(PSIG)	14.1	0.1
EXP TANK ARGON PRESS(PSIG)	2.5	0.1
TS BYP LINE PRESS IN(PSIG)	15.4	0.1
TS BYP LINE PRESS OUT(PSIG)	9.6	0.1

Test 10, run 116 (continued)

INSTRUMENT	20-SEC AVG	STD DEV	NORMALIZED TEMP
LOOP THERMOCOUPLES			
TEST SECT INLET WELL(DEG F)	845.0	0.2	
TEST SECT OUTLET WELL(DEG F)	871.4	0.2	
PUMP IN PIPE WALL TC	858.3	4.5	
PUMP OUT PIPE WALL TC	836.7	1.2	
RAD IN PIPE WALL TC	862.9	0.9	
RAD OUT PIPE WALL TC	840.9	0.5	
HEATER INTERNAL THERMOCOUPLES			
HTR TC IN HTR 08,12AB IN(DEG F)	847.8	0.4	0.11
HTR TC IN HTR 13,12AB IN	846.2	0.6	0.05
HTR TC IN HTR 18,12AB IN	845.1	0.3	0.00
HTR TC IN HTR 22,12AB IN	843.5	1.8	-.06
HTR TC IN HTR 08,12BC IN	848.8	0.5	0.14
HTR TC IN HTR 13,12BC IN	845.3	0.6	0.01
HTR TC IN HTR 18,12BC IN	843.6	0.4	-.05
HTR TC IN HTR 22,12BC IN	842.9	1.2	-.08
HTR TC IN HTR 09,15AB IN	843.0	8.6	-.07
HTR TC IN HTR 10,15BC IN	844.4	0.4	-.02
HTR TC IN HTR 16,15BC IN	1030.9	0.6	7.03
HTR TC IN HTR 25,15BC IN	842.7	1.0	-.09
HTR TC IN HTR 02,15.1 IN	850.2	0.4	0.20
HTR TC IN HTR 03,15.1 IN	848.1	0.5	0.12
HTR TC IN HTR 06,15.1 IN	858.4	0.5	0.51
HTR TC IN HTR 15,15.1 IN	869.5	0.5	0.93
HTR TC IN HTR 24,15.1 IN	842.6	0.5	-.09
HTR TC IN HTR 33,15.1 IN	930.3	0.5	3.23
HTR TC IN HTR 36,15.1 IN	843.4	0.5	-.06
HTR TC IN HTR 02,15.4 IN	850.5	0.5	0.21
HTR TC IN HTR 03,15.4 IN	852.3	0.7	0.28
HTR TC IN HTR 06,15.4 IN	859.6	0.6	0.55
HTR TC IN HTR 15,15.4 IN	862.2	0.8	0.65
HTR TC IN HTR 24,15.4 IN	844.0	0.4	-.04
HTR TC IN HTR 33,15.4 IN	932.1	0.7	3.30
HTR TC IN HTR 34,15.4 IN	718.3	30.4	****
HTR TC IN HTR 36,15.4 IN	841.2	0.6	-.14
HTR TC IN HTR 02,15.6 IN	850.3	0.4	0.20
HTR TC IN HTR 03,15.6 IN	848.8	0.4	0.15
HTR TC IN HTR 06,15.6 IN	857.9	0.4	0.49
HTR TC IN HTR 15,15.6 IN	863.4	1.2	0.69
HTR TC IN HTR 24,15.6 IN	843.8	0.5	-.04
HTR TC IN HTR 33,15.6 IN	941.3	1.3	3.64
HTR TC IN HTR 34,15.6 IN	859.1	6.1	0.53
HTR TC IN HTR 36,15.6 IN	842.7	0.5	-.09
HTR TC IN HTR 03,15.9 IN	846.6	0.3	0.06
HTR TC IN HTR 06,15.9 IN	858.3	0.4	0.50
HTR TC IN HTR 15,15.9 IN	871.9	0.8	1.02
HTR TC IN HTR 24,15.9 IN	842.9	0.5	-.08
HTR TC IN HTR 33,15.9 IN	926.2	0.5	3.07
HTR TC IN HTR 34,15.9 IN	850.6	1.1	0.21
HTR TC IN HTR 36,15.9 IN	843.0	1.2	-.07

Test 10, run 116 (continued)

INSTRUMENT	20-SEC AVG	STD DEV	NORMALIZED TEMP
HTR TC IN HTR 04,16.1 IN	848.4	0.3	0.13
HTR TC IN HTR 05,16.1 IN	856.4	0.4	0.43
HTR TC IN HTR 07,16.1 IN	856.6	0.4	0.44
HTR TC IN HTR 21,16.1 IN	844.3	0.3	-.02
HTR TC IN HTR 27,16.1 IN	848.9	1.0	0.15
HTR TC IN HTR 04,16.4 IN	847.3	0.5	0.09
HTR TC IN HTR 05,16.4 IN	862.7	1.3	0.67
HTR TC IN HTR 07,16.4 IN	856.3	0.4	0.43
HTR TC IN HTR 21,16.4 IN	845.3	0.5	0.01
HTR TC IN HTR 27,16.4 IN	847.6	0.7	0.10
HTR TC IN HTR 04,16.6 IN	850.8	0.4	0.22
HTR TC IN HTR 05,16.6 IN	858.1	0.5	0.50
HTR TC IN HTR 07,16.6 IN	851.8	0.7	0.26
HTR TC IN HTR 21,16.6 IN	842.9	0.5	-.08
HTR TC IN HTR 27,16.6 IN	845.2	0.6	0.01
HTR TC IN HTR 04,16.9 IN	850.6	0.4	0.21
HTR TC IN HTR 07,16.9 IN	856.2	0.7	0.42
HTR TC IN HTR 21,16.9 IN	840.7	0.8	-.16
HTR TC IN HTR 27,16.9 IN	844.9	0.3	-.00
HTR TC IN HTR 11,18AB IN	845.3	0.4	0.01
HTR TC IN HTR 12,18AB IN	844.9	0.3	-.00
HTR TC IN HTR 14,18AB IN	894.4	9.2	1.87
HTR TC IN HTR 30,18AB IN	897.4	7.4	1.98
HTR TC IN HTR 11,18BC IN	845.0	0.2	-.00
HTR TC IN HTR 12,18BC IN	845.5	0.6	0.02
HTR TC IN HTR 14,18BC IN	957.8	4.4	4.27
HTR TC IN HTR 17,18BC IN	873.2	0.6	1.07
HTR TC IN HTR 30,18BC IN	912.5	7.1	2.55
WIRE WRAP THERMOCOUPLES			
WW TC ON HTR 12,-1 IN(DEG F)	849.7	2.8	0.18
WW TC ON HTR 16,-1 IN	848.9	0.4	0.15
WW TC ON HTR 12,01 IN	847.5	12.6	0.09
WW TC ON HTR 16,09 IN	979.7	0.4	5.10
WW TC ON HTR 04,11 IN	849.4	0.4	0.17
WW TC ON HTR 05,11 IN	852.6	0.3	0.29
WW TC ON HTR 13,11 IN	849.8	0.4	0.18
WW TC ON HTR 17,11 IN	855.3	0.4	0.39
WW TC ON HTR 28,11 IN	851.3	0.4	0.24
WW TC ON HTR 31,11 IN	948.9	0.4	3.93
WW TC ON HTR 03,13 IN	845.4	0.7	0.01
WW TC ON HTR 13,13 IN	852.2	0.6	0.27
WW TC ON HTR 15,13 IN	974.0	0.4	4.88
WW TC ON HTR 17,13 IN	871.4	0.3	1.00
WW TC ON HTR 22,13 IN	849.2	0.4	0.16
WW TC ON HTR 01,15 IN	865.6	0.4	0.78
WW TC ON HTR 03,15 IN	851.6	0.3	0.25
WW TC ON HTR 08,15 IN	843.1	0.9	-.07
WW TC ON HTR 10,15 IN	846.8	0.5	0.07
WW TC ON HTR 15,15 IN	937.1	0.4	3.48

Test 10, run 116 (continued)

INSTRUMENT	20-SEC AVG	STD DEV	NORMALIZED TEMP
WW TC ON HTR 19,15 IN	852.4	0.3	0.28
WW TC ON HTR 25,15 IN	850.3	0.4	0.20
WW TC ON HTR 36,15 IN	847.1	1.0	0.08
WW TC ON HTR 01,17 IN	852.2	0.7	0.27
WW TC AJ HTR 02,17 IN	849.4	0.5	0.17
WW TC OP HTR 02,17 IN	850.7	0.3	0.22
WW TC ON HTR 08,17 IN	847.8	0.5	0.11
WW TC ON HTR 10,17 IN	846.6	0.4	0.06
WW TC ON HTR 11,17 IN	847.5	0.6	0.09
WW TC ON HTR 18,17 IN	857.3	0.4	0.46
WW TC ON HTR 19,17 IN	850.9	0.4	0.22
WW TC ON HTR 21,17 IN	849.7	0.4	0.18
WW TC ON HTR 22,17 IN	849.4	0.4	0.17
WW TC ON HTR 33,17 IN	886.3	0.5	1.56
WW TC ON HTR 37,17 IN	846.4	1.3	0.05
WW TC ON HTR 06,19 IN	875.6	0.3	1.16
WW TC AJ HTR 07,19 IN	850.4	0.4	0.21
WW TC OP HTR 07,19 IN	852.0	0.4	0.26
WW TC ON HTR 09,19 IN	848.1	0.4	0.12
WW TC ON HTR 14,19 IN	863.5	0.5	0.70
WW TC ON HTR 18,19 IN	853.5	0.4	0.32
WW TC ON HTR 27,19 IN	867.0	0.4	0.83
WW TC ON HTR 30,19 IN	892.8	0.4	1.81
WW TC ON HTR 34,19 IN	858.0	0.8	0.49
WW TC ON HTR 36,19 IN	847.0	0.7	0.08
WW TC ON HTR 37,19 IN	846.5	0.7	0.06
WW TC ON HTR 05,21 IN	859.9	0.2	0.56
WW TC ON HTR 06,21 IN	871.8	0.4	1.01
WW TC ON HTR 21,21 IN	850.8	0.3	0.22
WW TC ON HTR 24,21 IN	853.6	0.4	0.33
WW TC ON HTR 25,21 IN	853.5	0.6	0.32
WW TC ON HTR 27,21 IN	862.4	0.3	0.66
WW TC ON HTR 30,21 IN	910.8	0.4	2.49
WW TC ON HTR 33,21 IN	897.7	1.2	1.99
WW TC ON HTR 34,21 IN	850.4	0.7	0.20
WW TC ON HTR 04,23 IN	852.3	0.4	0.28
WW TC ON HTR 09,23 IN	847.9	0.5	0.11
WW TC ON HTR 14,23 IN	900.1	1.5	2.09
WW TC ON HTR 24,23 IN	852.5	0.3	0.29
WW TC ON HTR 28,23 IN	873.7	0.4	1.09
WW TC ON HTR 31,23 IN	919.8	1.0	2.83
WW TC ON ROD 01,25 IN	874.2	0.4	1.11
WW TC ON ROD 02,25 IN	850.8	0.1	0.22
WW TC ON ROD 05,25 IN	907.4	0.4	2.36
WW TC ON ROD 08,25 IN	847.9	0.4	0.11
WW TC ON ROD 14,25 IN	921.9	0.2	2.91
WW TC ON ROD 04,27 IN	860.7	0.1	0.60
WW TC ON ROD 07,27 IN	895.4	1.0	1.91
WW TC ON ROD 12,27 IN	870.1	0.9	0.95
WW TC ON ROD 16,27 IN	906.4	0.5	2.32
WW TC ON ROD 18,27 IN	870.0	0.3	0.94
WW TC ON ROD 03,29 IN	849.2	0.2	0.16

Test 10, run 116 (continued)

INSTRUMENT	20-SEC AVG	STD DEV	NORMALIZED TEMP
WW TC ON ROD 06,29 IN	899.7	0.3	2.07
WW TC ON ROD 10,29 IN	853.5	2.0	0.32
WW TC ON ROD 01,37 IN	871.0	0.4	0.98
WW TC ON ROD 02,37 IN	851.0	0.3	0.23
WW TC ON ROD 08,37 IN	851.6	0.2	0.25
WW TC ON ROD 14,37 IN	906.4	0.4	2.32
WW TC ON ROD 04,51 IN	877.2	0.3	1.22
WW TC ON ROD 07,51 IN	874.6	0.6	1.12
WW TC ON ROD 12,51 IN	880.6	0.3	1.35
WW TC ON ROD 16,51 IN	891.5	0.4	1.76
WW TC ON ROD 18,51 IN	865.6	0.5	0.78
WW TC ON ROD 03,63 IN	864.8	0.3	0.75
WW TC ON ROD 06,63 IN	888.0	0.1	1.63
WW TC ON ROD 10,63 IN	863.2	0.3	0.69
DUCT THERMOCOUPLES			
DUCT WALL TC,CH 38,19 IN(DEG F)	853.9	0.7	0.34
DUCT WALL TC,CH 53,19 IN	846.7	0.1	0.06
DUCT WALL TC,CH 28,21 IN	845.0	0.1	-.00
DUCT WALL TC,CH 43,21 IN	897.7	0.8	1.99
DUCT WALL TC,CH 44,21 IN	913.8	0.4	2.60
TEST SECTION HOUSING THERMOCOUPLES			
TS SHELL-BOT(DEG F)	846.5	0.7	
TS GUARD HTR-BOT	811.2	1.2	
TS HTR-BOT	756.4	0.4	
TS SHELL-LOW CTR	871.1	0.4	
TS GUARD HTR-LOW CTR	861.4	0.9	
TS HTR-LOW CTR	778.8	0.4	
TS SHELL-UP CTR	877.4	0.4	
TS GUARD HTR-UP CTR	880.0	1.0	
TS HTR-UP CTR	848.7	0.7	
TS SHELL-TOP	877.6	0.7	
TS GUARD HTR-TOP	875.0	1.3	
TS HTR-TOP	865.2	1.3	
REFERENCE BOX THERMOCOUPLES			
150 DEG REF BOX 1(DEG F)	148.0	0.9	
150 DEG REF BOX 2	148.4	0.8	
150 DEG REF BOX 3	151.6	0.8	
150 DEG REF BOX 4	149.6	0.7	
150 DEG REF BOX 5	147.4	0.4	
MISCELLANEOUS			
SOD PUMP SPEED(RPM)	687.5	2.9	
EXPANSION TANK LEVEL(% FULL)	74.8	0.1	

TEST SERIES 10(BUNDLE 3C); TEST 10 RUN 117 01/17/78 10 10 3

CONDITIONS:

TEST SECTION FLOW: 0.91 L/S (14.4 GPM)
TEST SECTION POWER
(1 ROD HEATED): 14.4 KW (27.0 KW/M/ROD)(8.2 KW/FT/ROD)

TEST SECTION INLET TEMPERATURE: 452 DEG C (846 DEG F)
TEST SECTION OUTLET TEMPERATURE: 466 DEG C (872 DEG F)

HEAT BALANCE:

HEAT INPUT FROM 31 FUEL PIN SIMULATORS: 14.4 KW
HEAT ABSORBED BY SODIUM=
FLOW X SP.HEAT X (TS OUT TEMP - TS IN TEMP) 14.2 KW
% OF INPUT HEAT ACCOUNTED FOR: 98.2 %

INSTRUMENT	20-SEC AVG	STD DEV
HEATER POWERS(KW)		
HTR POWER IN ROD 17	14.4	0.0
HTR POWER IN RODS 8,9,10	0.1	0.0
HTR POWER IN RODS 14,15,16	0.0	0.0
HTR POWER IN RODS 1,3,11,19	0.0	0.0
HTR POWER IN RODS 2,5,6,13	0.1	0.0
HTR POWER IN RODS 4,7,12,18	-0.0	0.0
HTR POWER IN RODS 30,31	-0.0	0.0
HTR POWER IN RODS 24,25,27,28	-0.3	0.0
HTR POWER IN RODS 33,34	-0.0	0.0
HTR POWER IN RODS 21,22,36,37	0.0	0.0
FLOWS		
TEST SECTION(TS) FLOW IN(GPM)	14.4	0.1
TS FLOW OUT(GPM)	14.5	0.1
TS BYPASS FLOW(GPM)	1.7	0.1
LOOP FLOW TOTAL(GPM)	14.5	0.1
RADIATOR AIR FLOW(CFM)	1.2	0.0
PRESSURES		
TS IN PRESS(PSIG)	15.1	0.1
TS OUT PRESS(PSIG)	6.0	0.1
PUMP OUT PRESS(PSIG)	10.4	0.0
TS LINE PRESS IN(PSIG)	14.0	0.1
EXP TANK ARGON PRESS(PSIG)	2.5	0.1
TS BYP LINE PRESS IN(PSIG)	15.3	0.1
TS BYP LINE PRESS OUT(PSIG)	9.5	0.1

Test 10, run 117 (continued)

INSTRUMENT	20-SEC AVG	STD DEV	NORMALIZED TEMP
LOOP THERMOCOUPLES			
TEST SECT INLET WELL(DEG F)	846.2	0.5	
TEST SECT OUTLET WELL(DEG F)	872.2	0.5	
PUMP IN PIPE WALL TC	859.5	4.5	
PUMP OUT PIPE WALL TC	837.8	0.7	
RAD IN PIPE WALL TC	864.1	0.6	
RAD OUT PIPE WALL TC	841.8	0.5	
HEATER INTERNAL THERMOCOUPLES			
HTR TC IN HTR 08,12AB IN(DEG F)	849.4	0.4	0.12
HTR TC IN HTR 13,12AB IN	846.6	0.5	0.01
HTR TC IN HTR 18,12AB IN	854.8	0.5	0.33
HTR TC IN HTR 22,12AB IN	841.6	4.0	-.18
HTR TC IN HTR 08,12BC IN	849.4	0.4	0.12
HTR TC IN HTR 13,12BC IN	846.6	0.7	0.02
HTR TC IN HTR 18,12BC IN	858.7	0.7	0.48
HTR TC IN HTR 22,12BC IN	844.6	0.9	-.06
HTR TC IN HTR 09,15AB IN	847.3	8.7	0.04
HTR TC IN HTR 10,15BC IN	843.9	0.8	-.09
HTR TC IN HTR 16,15BC IN	935.0	1.1	3.41
HTR TC IN HTR 25,15BC IN	844.0	0.8	-.09
HTR TC IN HTR 02,15.1 IN	857.7	0.4	0.44
HTR TC IN HTR 03,15.1 IN	852.1	0.4	0.22
HTR TC IN HTR 06,15.1 IN	869.6	0.7	0.90
HTR TC IN HTR 15,15.1 IN	857.4	0.7	0.43
HTR TC IN HTR 24,15.1 IN	844.1	0.3	-.08
HTR TC IN HTR 33,15.1 IN	947.8	1.0	3.91
HTR TC IN HTR 36,15.1 IN	849.5	0.5	0.13
HTR TC IN HTR 02,15.4 IN	859.1	0.7	0.49
HTR TC IN HTR 03,15.4 IN	850.1	0.5	0.15
HTR TC IN HTR 06,15.4 IN	872.7	1.1	1.02
HTR TC IN HTR 15,15.4 IN	857.8	0.4	0.44
HTR TC IN HTR 24,15.4 IN	843.1	0.4	-.12
HTR TC IN HTR 33,15.4 IN	948.1	0.8	3.92
HTR TC IN HTR 34,15.4 IN	985.1	92.4	5.34
HTR TC IN HTR 36,15.4 IN	847.7	1.6	0.06
HTR TC IN HTR 02,15.6 IN	856.3	0.5	0.39
HTR TC IN HTR 03,15.6 IN	852.4	0.4	0.24
HTR TC IN HTR 06,15.6 IN	870.1	1.4	0.92
HTR TC IN HTR 15,15.6 IN	859.6	0.8	0.51
HTR TC IN HTR 24,15.6 IN	843.7	0.5	-.10
HTR TC IN HTR 33,15.6 IN	980.4	3.6	5.16
HTR TC IN HTR 34,15.6 IN	943.3	9.2	3.73
HTR TC IN HTR 36,15.6 IN	844.8	0.7	-.06
HTR TC IN HTR 03,15.9 IN	850.4	0.9	0.16
HTR TC IN HTR 06,15.9 IN	865.9	2.1	0.76
HTR TC IN HTR 15,15.9 IN	861.0	0.5	0.57
HTR TC IN HTR 24,15.9 IN	844.9	0.3	-.05
HTR TC IN HTR 33,15.9 IN	974.3	0.6	4.92
HTR TC IN HTR 34,15.9 IN	922.9	0.9	2.95
HTR TC IN HTR 36,15.9 IN	846.6	1.1	0.01

Test 10, run 117 (continued)

INSTRUMENT	20-SEC AVG	STD DEV	NORMALIZED TEMP
HTR TC IN HTR 04,16.1 IN	848.8	0.4	0.10
HTR TC IN HTR 05,16.1 IN	857.3	0.4	0.43
HTR TC IN HTR 07,16.1 IN	878.3	1.4	1.23
HTR TC IN HTR 21,16.1 IN	844.6	0.4	-.06
HTR TC IN HTR 27,16.1 IN	845.3	1.0	-.04
HTR TC IN HTR 04,16.4 IN	849.1	0.6	0.11
HTR TC IN HTR 05,16.4 IN	851.0	1.5	0.18
HTR TC IN HTR 07,16.4 IN	874.5	1.1	1.09
HTR TC IN HTR 21,16.4 IN	843.8	0.4	-.10
HTR TC IN HTR 27,16.4 IN	846.0	0.8	-.01
HTR TC IN HTR 04,16.6 IN	851.3	0.4	0.19
HTR TC IN HTR 05,16.6 IN	862.8	0.6	0.64
HTR TC IN HTR 07,16.6 IN	874.1	0.7	1.07
HTR TC IN HTR 21,16.6 IN	845.4	0.5	-.03
HTR TC IN HTR 27,16.6 IN	844.9	0.5	-.05
HTR TC IN HTR 04,16.9 IN	850.2	0.4	0.15
HTR TC IN HTR 07,16.9 IN	867.0	0.8	0.80
HTR TC IN HTR 21,16.9 IN	845.2	0.8	-.04
HTR TC IN HTR 27,16.9 IN	844.4	0.7	-.07
HTR TC IN HTR 11,18AB IN	845.6	0.6	-.02
HTR TC IN HTR 12,18AB IN	844.0	0.5	-.08
HTR TC IN HTR 14,18AB IN	864.6	10.0	0.71
HTR TC IN HTR 30,18AB IN	855.2	7.2	0.34
HTR TC IN HTR 11,18BC IN	846.5	0.4	0.01
HTR TC IN HTR 12,18BC IN	845.3	0.7	-.04
HTR TC IN HTR 14,18BC IN	934.3	14.5	3.39
HTR TC IN HTR 17,18BC IN	1069.3	0.4	8.58
HTR TC IN HTR 30,18BC IN	858.9	7.3	0.49
WIRE WRAP THERMOCOUPLES			
WW TC ON HTR 12,-1 IN(DEG F)	846.7	2.6	0.02
WW TC ON HTR 16,-1 IN	853.3	0.9	0.27
WW TC ON HTR 12,01 IN	847.3	0.4	0.04
WW TC ON HTR 16,09 IN	903.6	0.9	2.21
WW TC ON HTR 04,11 IN	851.1	0.4	0.19
WW TC ON HTR 05,11 IN	853.6	0.4	0.28
WW TC ON HTR 13,11 IN	847.5	0.4	0.05
WW TC ON HTR 17,11 IN	973.4	0.5	4.89
WW TC ON HTR 28,11 IN	850.3	0.4	0.15
WW TC ON HTR 31,11 IN	857.4	0.6	0.43
WW TC ON HTR 03,13 IN	846.6	0.9	0.02
WW TC ON HTR 13,13 IN	849.5	0.8	0.12
WW TC ON HTR 15,13 IN	867.6	0.4	0.82
WW TC ON HTR 17,13 IN	1007.1	0.4	6.19
WW TC ON HTR 22,13 IN	848.6	0.4	0.09
WW TC ON HTR 01,15 IN	869.5	0.6	0.89
WW TC ON HTR 03,15 IN	852.7	0.5	0.25
WW TC ON HTR 08,15 IN	848.2	1.0	0.07
WW TC ON HTR 10,15 IN	846.9	0.4	0.03
WW TC ON HTR 15,15 IN	864.5	0.4	0.70

Test 10, run 117 (continued)

INSTRUMENT	20-SEC AVG	STD DEV	NORMALIZED TEMP
WW TC ON HTR 19,15 IN	862.6	0.4	0.63
WW TC ON HTR 25,15 IN	848.8	0.4	0.10
WW TC ON HTR 36,15 IN	852.0	0.9	0.22
WW TC ON HTR 01,17 IN	854.5	0.7	0.32
WW TC AJ HTR 02,17 IN	852.7	1.0	0.25
WW TC OP HTR 02,17 IN	854.0	0.3	0.30
WW TC ON HTR 08,17 IN	849.6	0.9	0.13
WW TC ON HTR 10,17 IN	848.0	0.4	0.07
WW TC ON HTR 11,17 IN	846.9	0.5	0.03
WW TC ON HTR 18,17 IN	940.3	0.5	3.62
WW TC ON HTR 19,17 IN	855.9	0.4	0.37
WW TC ON HTR 21,17 IN	849.3	0.4	0.12
WW TC ON HTR 22,17 IN	849.2	0.3	0.11
WW TC ON HTR 33,17 IN	900.9	1.2	2.10
WW TC ON HTR 37,17 IN	846.8	1.0	0.02
WW TC ON HTR 06,19 IN	885.2	1.0	1.50
WW TC AJ HTR 07,19 IN	868.6	1.3	0.86
WW TC OP HTR 07,19 IN	875.9	1.4	1.14
WW TC ON HTR 09,19 IN	849.0	0.5	0.11
WW TC ON HTR 14,19 IN	851.6	0.8	0.21
WW TC ON HTR 18,19 IN	896.5	0.4	1.93
WW TC ON HTR 27,19 IN	852.9	0.4	0.26
WW TC ON HTR 30,19 IN	857.2	0.4	0.42
WW TC ON HTR 34,19 IN	970.3	1.0	4.77
WW TC ON HTR 36,19 IN	850.5	0.9	0.17
WW TC ON HTR 37,19 IN	846.5	0.7	0.01
WW TC ON HTR 05,21 IN	858.0	0.4	0.45
WW TC ON HTR 06,21 IN	899.3	0.7	2.04
WW TC ON HTR 21,21 IN	850.0	0.3	0.14
WW TC ON HTR 24,21 IN	851.7	0.4	0.21
WW TC ON HTR 25,21 IN	850.0	0.5	0.15
WW TC ON HTR 27,21 IN	852.5	0.4	0.24
WW TC ON HTR 30,21 IN	863.6	0.5	0.67
WW TC ON HTR 33,21 IN	990.2	1.3	5.54
WW TC ON HTR 34,21 IN	894.4	1.1	1.85
WW TC ON HTR 04,23 IN	854.2	0.3	0.31
WW TC ON HTR 09,23 IN	848.3	0.5	0.08
WW TC ON HTR 14,23 IN	861.2	1.0	0.58
WW TC ON HTR 24,23 IN	851.3	0.4	0.19
WW TC ON HTR 28,23 IN	853.1	0.4	0.26
WW TC ON HTR 31,23 IN	893.7	0.5	1.83
WW TC ON ROD 01,25 IN	888.7	0.3	1.63
WW TC ON ROD 02,25 IN	874.6	0.4	1.09
WW TC ON ROD 05,25 IN	879.0	0.2	1.26
WW TC ON ROD 08,25 IN	850.0	0.1	0.14
WW TC ON ROD 14,25 IN	878.9	0.1	1.26
WW TC ON ROD 04,27 IN	852.5	0.1	0.24
WW TC ON ROD 07,27 IN	942.5	1.0	3.70
WW TC ON ROD 12,27 IN	855.6	0.6	0.36
WW TC ON ROD 16,27 IN	896.1	0.3	1.92
WW TC ON ROD 18,27 IN	924.4	0.3	3.01
WW TC ON ROD 03,29 IN	848.8	0.4	0.10

Test 10, run 117 (continued)

INSTRUMENT	20-SEC AVG	STD DEV	NORMALIZED TEMP
WW TC ON ROD 06,29 IN	883.9	0.2	1.45
WW TC ON ROD 10,29 IN	852.1	1.0	0.23
WW TC ON ROD 01,37 IN	889.7	0.2	1.67
WW TC ON ROD 02,37 IN	863.2	0.1	0.65
WW TC ON ROD 08,37 IN	854.1	0.2	0.30
WW TC ON ROD 14,37 IN	880.2	0.4	1.31
WW TC ON ROD 04,51 IN	867.8	0.4	0.83
WW TC ON ROD 07,51 IN	894.7	0.3	1.86
WW TC ON ROD 12,51 IN	865.7	0.1	0.75
WW TC ON ROD 16,51 IN	900.9	0.4	2.10
WW TC ON ROD 18,51 IN	883.1	0.1	1.42
WW TC ON ROD 03,63 IN	865.9	0.4	0.76
WW TC ON ROD 06,63 IN	894.1	0.4	1.84
WW TC ON ROD 10,63 IN	860.0	0.2	0.53
DUCT THERMOCOUPLES			
DUCT WALL TC,CH 38,19 IN(DEG F)	845.9	0.9	-.01
DUCT WALL TC,CH 53,19 IN	854.6	0.4	0.32
DUCT WALL TC,CH 28,21 IN	844.2	0.2	-.08
DUCT WALL TC,CH 43,21 IN	859.7	0.8	0.52
DUCT WALL TC,CH 44,21 IN	870.8	0.3	0.94
TEST SECTION HOUSING THERMOCOUPLES			
TS SHELL-BOT(DEG F)	847.1	0.7	
TS GUARD HTR-BOT	812.0	0.3	
TS HTR-BOT	757.4	0.5	
TS SHELL-LOW CTR	860.8	0.2	
TS GUARD HTR-LOW CTR	858.1	0.7	
TS HTR-LOW CTR	779.3	0.8	
TS SHELL-UP CTR	880.2	0.8	
TS GUARD HTR-UP CTR	880.0	0.6	
TS HTR-UP CTR	850.5	0.7	
TS SHELL-TOP	875.0	0.9	
TS GUARD HTR-TOP	874.5	1.1	
TS HTR-TOP	867.0	1.0	
REFERENCE BOX THERMOCOUPLES			
150 DEG REF BOX 1(DEG F)	147.8	1.2	
150 DEG REF BOX 2	148.9	0.6	
150 DEG REF BOX 3	151.8	0.7	
150 DEG REF BOX 4	149.2	0.4	
150 DEG REF BOX 5	146.6	0.4	
MISCELLANEOUS			
SOD PUMP SPEED(RPM)	684.3	18.8	
EXPANSION TANK LEVEL(% FULL)	74.5	0.1	

TEST SERIES 10(BUNDLE 3C); TEST 10 RUN 118 01/17/78 10 29 50

CONDITIONS:

TEST SECTION FLOW: 0.92 L/S (14.5 GPM)

TEST SECTION POWER
(1 ROD HEATED): 14.3 KW (26.9 KW/M/ROD)(8.2 KW/FT/ROD)

TEST SECTION INLET TEMPERATURE: 452 DEG C (845 DEG F)

TEST SECTION OUTLET TEMPERATURE: 466 DEG C (871 DEG F)

HEAT BALANCE:

HEAT INPUT FROM 31 FUEL PIN SIMULATORS: 14.3 KW

HEAT ABSORBED BY SODIUM=
FLOW X SP.HEAT X (TS OUT TEMP - TS IN TEMP) 14.0 KW

% OF INPUT HEAT ACCOUNTED FOR: 97.6 %

INSTRUMENT	20-SEC AVG	STD DEV
HEATER POWERS(KW)		
HTR POWER IN ROD 18	14.3	0.0
HTR POWER IN RODS 8,9,10	0.1	0.0
HTR POWER IN RODS 14,15,16	0.0	0.0
HTR POWER IN RODS 1,3,11,19	0.0	0.0
HTR POWER IN RODS 5,6,13,17	0.1	0.0
HTR POWER IN RODS 2,4,7,12	-0.0	0.0
HTR POWER IN RODS 30,31	-0.0	0.0
HTR POWER IN RODS 24,25,27,28	-0.4	0.0
HTR POWER IN RODS 33,34	-0.0	0.0
HTR POWER IN RODS 21,22,36,37	0.0	0.0
FLOWS		
TEST SECTION(TS) FLOW IN(GPM)	14.5	0.1
TS FLOW OUT(GPM)	14.6	0.1
TS BYPASS FLOW(GPM)	1.5	0.1
LOOP FLOW TOTAL(GPM)	14.6	0.1
RADIATOR AIR FLOW(CFM)	1.2	0.0
PRESSURES		
TS IN PRESS(PSIG)	15.2	0.1
TS OUT PRESS(PSIG)	6.0	0.1
PUMP OUT PRESS(PSIG)	10.4	0.1
TS LINE PRESS IN(PSIG)	14.0	0.1
EXP TANK ARGON PRESS(PSIG)	2.4	0.1
TS BYP LINE PRESS IN(PSIG)	15.3	0.1
TS BYP LINE PRESS OUT(PSIG)	9.5	0.1

Test 10, run 118 (continued)

INSTRUMENT	20-SEC AVG	STD DEV	NORMALIZED TEMP
LOOP THERMOCOUPLES			
TEST SECT INLET WELL(DEG F)	846.0	0.5	
TEST SECT OUTLET WELL(DEG F)	871.5	0.3	
PUMP IN PIPE WALL TC	859.0	4.6	
PUMP OUT PIPE WALL TC	836.9	0.9	
RAD IN PIPE WALL TC	862.5	0.6	
RAD OUT PIPE WALL TC	840.5	0.6	
HEATER INTERNAL THERMOCOUPLES			
HTR TC IN HTR 08,12AB IN(DEG F)	853.2	0.3	0.29
HTR TC IN HTR 13,12AB IN	846.5	0.4	0.02
HTR TC IN HTR 18,12AB IN	1026.9	0.5	7.09
HTR TC IN HTR 22,12AB IN	843.9	0.7	-.08
HTR TC IN HTR 08,12BC IN	853.2	0.4	0.29
HTR TC IN HTR 13,12BC IN	846.7	0.5	0.03
HTR TC IN HTR 18,12BC IN	1032.9	0.8	7.33
HTR TC IN HTR 22,12BC IN	844.1	1.0	-.07
HTR TC IN HTR 09,15AB IN	849.4	8.7	0.14
HTR TC IN HTR 10,15BC IN	844.8	0.6	-.05
HTR TC IN HTR 16,15BC IN	873.7	0.7	1.09
HTR TC IN HTR 25,15BC IN	844.6	0.7	-.05
HTR TC IN HTR 02,15.1 IN	858.7	0.5	0.50
HTR TC IN HTR 03,15.1 IN	850.1	0.4	0.16
HTR TC IN HTR 06,15.1 IN	857.1	0.9	0.44
HTR TC IN HTR 15,15.1 IN	847.2	0.4	0.05
HTR TC IN HTR 24,15.1 IN	843.9	0.4	-.08
HTR TC IN HTR 33,15.1 IN	882.2	0.4	1.42
HTR TC IN HTR 36,15.1 IN	907.7	0.5	2.42
HTR TC IN HTR 02,15.4 IN	859.0	0.8	0.51
HTR TC IN HTR 03,15.4 IN	849.2	1.0	0.13
HTR TC IN HTR 06,15.4 IN	858.5	1.2	0.49
HTR TC IN HTR 15,15.4 IN	847.6	0.3	0.06
HTR TC IN HTR 24,15.4 IN	843.5	0.4	-.09
HTR TC IN HTR 33,15.4 IN	881.1	0.5	1.38
HTR TC IN HTR 34,15.4 IN	856.4	111.2	0.41
HTR TC IN HTR 36,15.4 IN	901.3	1.7	2.17
HTR TC IN HTR 02,15.6 IN	854.2	0.4	0.32
HTR TC IN HTR 03,15.6 IN	849.5	0.4	0.14
HTR TC IN HTR 06,15.6 IN	857.5	1.8	0.45
HTR TC IN HTR 15,15.6 IN	848.0	0.4	0.08
HTR TC IN HTR 24,15.6 IN	844.1	0.4	-.07
HTR TC IN HTR 33,15.6 IN	884.2	2.7	1.50
HTR TC IN HTR 34,15.6 IN	1003.0	10.1	6.15
HTR TC IN HTR 36,15.6 IN	877.5	1.2	1.24
HTR TC IN HTR 03,15.9 IN	847.0	1.4	0.04
HTR TC IN HTR 06,15.9 IN	854.3	0.9	0.33
HTR TC IN HTR 15,15.9 IN	846.7	0.3	0.03
HTR TC IN HTR 24,15.9 IN	844.7	0.4	-.05
HTR TC IN HTR 33,15.9 IN	884.4	0.4	1.51
HTR TC IN HTR 34,15.9 IN	972.1	5.0	4.94
HTR TC IN HTR 36,15.9 IN	878.4	1.4	1.27

Test 10, run 118 (continued)

INSTRUMENT	20-SEC AVG	STD DEV	NORMALIZED TEMP
HTR TC IN HTR 04,16.1 IN	846.7	0.3	0.03
HTR TC IN HTR 05,16.1 IN	850.4	0.4	0.18
HTR TC IN HTR 07,16.1 IN	873.0	0.5	1.06
HTR TC IN HTR 21,16.1 IN	845.0	0.1	-.04
HTR TC IN HTR 27,16.1 IN	845.4	1.0	-.02
HTR TC IN HTR 04,16.4 IN	846.4	0.4	0.02
HTR TC IN HTR 05,16.4 IN	847.6	3.1	0.06
HTR TC IN HTR 07,16.4 IN	870.6	0.2	0.97
HTR TC IN HTR 21,16.4 IN	845.0	0.3	-.04
HTR TC IN HTR 27,16.4 IN	845.4	0.7	-.02
HTR TC IN HTR 04,16.6 IN	848.6	0.4	0.10
HTR TC IN HTR 05,16.6 IN	852.9	0.4	0.27
HTR TC IN HTR 07,16.6 IN	869.8	0.3	0.93
HTR TC IN HTR 21,16.6 IN	846.2	0.7	0.01
HTR TC IN HTR 27,16.6 IN	844.2	0.6	-.07
HTR TC IN HTR 04,16.9 IN	848.0	0.4	0.08
HTR TC IN HTR 07,16.9 IN	867.9	0.4	0.86
HTR TC IN HTR 21,16.9 IN	846.0	1.4	0.00
HTR TC IN HTR 27,16.9 IN	843.1	0.7	-.11
HTR TC IN HTR 11,18AB IN	845.2	0.3	-.03
HTR TC IN HTR 12,18AB IN	843.4	0.5	-.10
HTR TC IN HTR 14,18AB IN	864.4	10.0	0.72
HTR TC IN HTR 30,18AB IN	845.3	7.1	-.03
HTR TC IN HTR 11,18BC IN	845.8	0.4	-.01
HTR TC IN HTR 12,18BC IN	845.5	0.5	-.02
HTR TC IN HTR 14,18BC IN	927.2	20.2	3.18
HTR TC IN HTR 17,18BC IN	903.1	0.5	2.24
HTR TC IN HTR 30,18BC IN	843.7	7.3	-.09
WIRE WRAP THERMOCOUPLES			
WW TC ON HTR 12,-1 IN(DEG F)	848.0	3.0	0.08
WW TC ON HTR 16,-1 IN	847.8	1.0	0.07
WW TC ON HTR 12,01 IN	847.4	1.3	0.06
WW TC ON HTR 16,09 IN	852.8	0.8	0.27
WW TC ON HTR 04,11 IN	849.9	0.5	0.15
WW TC ON HTR 05,11 IN	848.9	0.4	0.11
WW TC ON HTR 13,11 IN	847.3	0.6	0.05
WW TC ON HTR 17,11 IN	958.2	0.2	4.40
WW TC ON HTR 28,11 IN	849.3	0.4	0.13
WW TC ON HTR 31,11 IN	854.5	0.6	0.33
WW TC ON HTR 03,13 IN	846.6	0.7	0.03
WW TC ON HTR 13,13 IN	848.7	0.5	0.11
WW TC ON HTR 15,13 IN	852.1	0.4	0.24
WW TC ON HTR 17,13 IN	917.8	0.4	2.82
WW TC ON HTR 22,13 IN	848.6	0.4	0.10
WW TC ON HTR 01,15 IN	860.4	0.8	0.56
WW TC ON HTR 03,15 IN	850.8	0.4	0.19
WW TC ON HTR 08,15 IN	851.4	1.8	0.21
WW TC ON HTR 10,15 IN	846.9	0.4	0.04
WW TC ON HTR 15,15 IN	852.5	0.3	0.26

Test 10, run 118 (continued)

INSTRUMENT	20-SEC AVG	STD DEV	NORMALIZED TEMP
WW TC ON HTR 19,15 IN	898.2	0.4	2.05
WW TC ON HTR 25,15 IN	848.8	0.4	0.11
WW TC ON HTR 36,15 IN	905.3	0.9	2.32
WW TC ON HTR 01,17 IN	849.9	0.6	0.15
WW TC AJ HTR 02,17 IN	851.7	1.0	0.23
WW TC OP HTR 02,17 IN	854.2	1.2	0.32
WW TC ON HTR 08,17 IN	853.9	0.7	0.31
WW TC ON HTR 10,17 IN	847.9	0.4	0.08
WW TC ON HTR 11,17 IN	846.8	0.5	0.03
WW TC ON HTR 18,17 IN	1003.3	0.4	6.17
WW TC ON HTR 19,17 IN	875.4	0.4	1.15
WW TC ON HTR 21,17 IN	849.8	0.4	0.15
WW TC ON HTR 22,17 IN	849.2	0.4	0.13
WW TC ON HTR 33,17 IN	886.3	0.7	1.58
WW TC ON HTR 37,17 IN	851.9	1.0	0.23
WW TC ON HTR 06,19 IN	861.1	1.0	0.59
WW TC AJ HTR 07,19 IN	875.2	2.1	1.14
WW TC OP HTR 07,19 IN	871.2	1.8	0.99
WW TC ON HTR 09,19 IN	849.5	0.4	0.14
WW TC ON HTR 14,19 IN	849.8	0.8	0.15
WW TC ON HTR 18,19 IN	995.8	0.4	5.87
WW TC ON HTR 27,19 IN	852.7	0.4	0.27
WW TC ON HTR 30,19 IN	857.3	0.4	0.44
WW TC ON HTR 34,19 IN	975.0	0.9	5.05
WW TC ON HTR 36,19 IN	886.5	1.3	1.59
WW TC ON HTR 37,19 IN	849.5	0.6	0.14
WW TC ON HTR 05,21 IN	851.5	0.4	0.22
WW TC ON HTR 06,21 IN	872.6	0.8	1.04
WW TC ON HTR 21,21 IN	850.9	0.4	0.19
WW TC ON HTR 24,21 IN	852.4	0.3	0.25
WW TC ON HTR 25,21 IN	850.8	0.4	0.19
WW TC ON HTR 27,21 IN	852.3	0.4	0.25
WW TC ON HTR 30,21 IN	856.4	0.4	0.41
WW TC ON HTR 33,21 IN	920.9	1.1	2.94
WW TC ON HTR 34,21 IN	944.8	1.1	3.87
WW TC ON HTR 04,23 IN	852.4	0.3	0.25
WW TC ON HTR 09,23 IN	850.3	0.4	0.17
WW TC ON HTR 14,23 IN	852.2	0.6	0.24
WW TC ON HTR 24,23 IN	851.8	0.3	0.23
WW TC ON HTR 28,23 IN	851.9	0.4	0.23
WW TC ON HTR 31,23 IN	900.7	0.9	2.14
WW TC ON ROD 01,25 IN	867.2	0.3	0.83
WW TC ON ROD 02,25 IN	892.9	0.4	1.84
WW TC ON ROD 05,25 IN	862.3	0.2	0.64
WW TC ON ROD 08,25 IN	860.8	0.2	0.58
WW TC ON ROD 14,25 IN	869.7	0.3	0.93
WW TC ON ROD 04,27 IN	849.9	0.2	0.16
WW TC ON ROD 07,27 IN	904.2	1.2	2.28
WW TC ON ROD 12,27 IN	854.9	0.7	0.35
WW TC ON ROD 16,27 IN	902.4	0.4	2.21
WW TC ON ROD 18,27 IN	930.1	0.1	3.30
WW TC ON ROD 03,29 IN	848.3	0.1	0.09

Test 10, run 118 (continued)

INSTRUMENT	20-SEC AVG	STD DEV	NORMALIZED TEMP
WW TC ON ROD 06,29 IN	864.6	0.4	0.73
WW TC ON ROD 10,29 IN	852.5	0.8	0.26
WW TC ON ROD 01,37 IN	880.7	0.3	1.36
WW TC ON ROD 02,37 IN	873.8	0.3	1.09
WW TC ON ROD 08,37 IN	860.8	0.2	0.58
WW TC ON ROD 14,37 IN	871.8	0.4	1.01
WW TC ON ROD 04,51 IN	861.5	0.1	0.61
WW TC ON ROD 07,51 IN	893.9	0.4	1.88
WW TC ON ROD 12,51 IN	863.1	0.3	0.67
WW TC ON ROD 16,51 IN	896.6	0.4	1.99
WW TC ON ROD 18,51 IN	894.6	0.2	1.90
WW TC ON ROD 03,63 IN	863.2	0.1	0.68
WW TC ON ROD 06,63 IN	888.7	0.3	1.67
WW TC ON ROD 10,63 IN	858.6	0.4	0.50
DUCT THERMOCOUPLES			
DUCT WALL TC,CH 38,19 IN(DEG F)	846.6	0.7	0.02
DUCT WALL TC,CH 53,19 IN	892.1	0.1	1.81
DUCT WALL TC,CH 28,21 IN	846.6	0.2	0.03
DUCT WALL TC,CH 43,21 IN	857.9	0.7	0.47
DUCT WALL TC,CH 44,21 IN	863.9	0.4	0.70
TEST SECTION HOUSING THERMOCOUPLES			
TS SHELL-BOT(DEG F)	847.1	0.4	
TS GUARD HTR-BOT	811.9	0.3	
TS HTR-BOT	758.0	0.4	
TS SHELL-LOW CTR	867.7	1.3	
TS GUARD HTR-LOW CTR	862.0	0.7	
TS HTR-LOW CTR	781.3	0.6	
TS SHELL-UP CTR	877.1	0.4	
TS GUARD HTR-UP CTR	881.3	0.7	
TS HTR-UP CTR	851.4	0.7	
TS SHELL-TOP	872.8	0.9	
TS GUARD HTR-TOP	873.5	1.5	
TS HTR-TOP	867.8	1.0	
REFERENCE BOX THERMOCOUPLES			
150 DEG REF BOX 1(DEG F)	148.0	1.2	
150 DEG REF BOX 2	149.0	0.7	
150 DEG REF BOX 3	151.5	0.6	
150 DEG REF BOX 4	149.2	0.4	
150 DEG REF BOX 5	146.7	0.4	
MISCELLANEOUS			
SOD PUMP SPEED(RPM)	686.6	0.4	
EXPANSION TANK LEVEL(% FULL)	74.5	0.2	

TEST SERIES 10(BUNDLE 3C); TEST 10 RUN 119 01/17/78 10 57 50

CONDITIONS:

TEST SECTION FLOW: 0.91 L/S (14.4 GPM)

TEST SECTION POWER
(1 ROD HEATED): 14.0 KW (26.2 KW/M/ROD)(8.0 KW/FT/ROD)

TEST SECTION INLET TEMPERATURE: 453 DEG C (847 DEG F)

TEST SECTION OUTLET TEMPERATURE: 467 DEG C (873 DEG F)

HEAT BALANCE:

HEAT INPUT FROM 31 FUEL PIN SIMULATORS:	14.0 KW
HEAT ABSORBED BY SODIUM= FLOW X SP.HEAT X (TS OUT TEMP - TS IN TEMP)	13.9 KW
% OF INPUT HEAT ACCOUNTED FOR:	99.9 %

INSTRUMENT	20-SEC AVG	STD DEV
HEATER POWERS(KW)		
HTR POWER IN ROD 19	14.0	0.0
HTR POWER IN RODS 8,9,10	0.1	0.0
HTR POWER IN RODS 14,15,16	0.0	0.0
HTR POWER IN RODS 1,2,3,11	0.0	0.0
HTR POWER IN RODS 5,6,13,17	0.1	0.0
HTR POWER IN RODS 4,7,12,18	-0.0	0.0
HTR POWER IN RODS 30,31	-0.0	0.0
HTR POWER IN RODS 24,25,27,28	-0.3	0.0
HTR POWER IN RODS 33,34	-0.0	0.0
HTR POWER IN RODS 21,22,36,37	0.0	0.0
FLOWS		
TEST SECTION(TS) FLOW IN(GPM)	14.4	0.1
TS FLOW OUT(GPM)	14.4	0.1
TS BYPASS FLOW(GPM)	1.8	0.1
LOOP FLOW TOTAL(GPM)	14.5	0.1
RADIATOR AIR FLOW(CFM)	1.2	0.0
PRESSURES		
TS IN PRESS(PSIG)	15.0	0.1
TS OUT PRESS(PSIG)	6.0	0.1
PUMP OUT PRESS(PSIG)	10.3	0.0
TS LINE PRESS IN(PSIG)	13.9	0.1
EXP TANK ARGON PRESS(PSIG)	2.4	0.1
TS BYP LINE PRESS IN(PSIG)	15.2	0.1
TS BYP LINE PRESS OUT(PSIG)	9.5	0.1

Test 10, run 119 (continued)

INSTRUMENT	20-SEC AVG	STD DEV	NORMALIZED TEMP
LOOP THERMOCOUPLES			
TEST SECT INLET WELL(DEG F)	847.5	0.3	
TEST SECT OUTLET WELL(DEG F)	873.1	0.4	
PUMP IN PIPE WALL TC	860.9	4.4	
PUMP OUT PIPE WALL TC	838.9	1.0	
RAD IN PIPE WALL TC	864.8	0.7	
RAD OUT PIPE WALL TC	842.6	0.5	
HEATER INTERNAL THERMOCOUPLES			
HTR TC IN HTR 08,12AB IN(DEG F)	919.4	0.4	2.81
HTR TC IN HTR 13,12AB IN	847.4	0.3	-.00
HTR TC IN HTR 18,12AB IN	904.0	0.5	2.20
HTR TC IN HTR 22,12AB IN	846.7	0.1	-.03
HTR TC IN HTR 08,12BC IN	919.1	0.5	2.79
HTR TC IN HTR 13,12BC IN	847.5	0.3	0.00
HTR TC IN HTR 18,12BC IN	903.7	0.2	2.19
HTR TC IN HTR 22,12BC IN	846.3	0.9	-.04
HTR TC IN HTR 09,15AB IN	866.2	8.5	0.73
HTR TC IN HTR 10,15BC IN	850.3	0.4	0.11
HTR TC IN HTR 16,15BC IN	851.4	0.4	0.15
HTR TC IN HTR 25,15BC IN	845.6	1.1	-.07
HTR TC IN HTR 02,15.1 IN	904.6	0.7	2.23
HTR TC IN HTR 03,15.1 IN	863.1	0.4	0.61
HTR TC IN HTR 06,15.1 IN	868.5	0.6	0.82
HTR TC IN HTR 15,15.1 IN	848.3	0.3	0.03
HTR TC IN HTR 24,15.1 IN	845.0	0.1	-.10
HTR TC IN HTR 33,15.1 IN	853.4	0.3	0.23
HTR TC IN HTR 36,15.1 IN	941.0	0.5	3.65
HTR TC IN HTR 02,15.4 IN	886.0	1.4	1.50
HTR TC IN HTR 03,15.4 IN	859.1	0.5	0.45
HTR TC IN HTR 06,15.4 IN	867.9	0.5	0.80
HTR TC IN HTR 15,15.4 IN	850.6	0.4	0.12
HTR TC IN HTR 24,15.4 IN	845.0	0.1	-.10
HTR TC IN HTR 33,15.4 IN	853.9	0.4	0.25
HTR TC IN HTR 34,15.4 IN	697.8	4.5	****
HTR TC IN HTR 36,15.4 IN	947.6	1.1	3.91
HTR TC IN HTR 02,15.6 IN	878.1	0.4	1.20
HTR TC IN HTR 03,15.6 IN	858.9	0.6	0.44
HTR TC IN HTR 06,15.6 IN	866.1	0.4	0.73
HTR TC IN HTR 15,15.6 IN	849.9	0.2	0.10
HTR TC IN HTR 24,15.6 IN	845.2	0.5	-.09
HTR TC IN HTR 33,15.6 IN	851.3	0.5	0.15
HTR TC IN HTR 34,15.6 IN	907.7	2.4	2.35
HTR TC IN HTR 36,15.6 IN	955.9	1.2	4.23
HTR TC IN HTR 03,15.9 IN	852.1	0.4	0.18
HTR TC IN HTR 06,15.9 IN	864.3	0.5	0.66
HTR TC IN HTR 15,15.9 IN	847.4	0.3	-.00
HTR TC IN HTR 24,15.9 IN	845.0	0.1	-.10
HTR TC IN HTR 33,15.9 IN	851.7	0.3	0.17
HTR TC IN HTR 34,15.9 IN	877.3	0.3	1.16

Test 10, run 119 (continued)

INSTRUMENT	20-SEC AVG	STD DEV	NORMALIZED TEMP
HTR TC IN HTR 36,15.9 IN	959.1	1.2	4.36
HTR TC IN HTR 04,16.1 IN	852.9	0.5	0.21
HTR TC IN HTR 05,16.1 IN	854.8	0.3	0.29
HTR TC IN HTR 07,16.1 IN	907.2	0.7	2.33
HTR TC IN HTR 21,16.1 IN	848.9	0.4	0.06
HTR TC IN HTR 27,16.1 IN	846.1	1.2	-.05
HTR TC IN HTR 04,16.4 IN	853.4	0.5	0.23
HTR TC IN HTR 05,16.4 IN	856.8	1.0	0.36
HTR TC IN HTR 07,16.4 IN	906.0	0.9	2.28
HTR TC IN HTR 21,16.4 IN	849.5	0.4	0.08
HTR TC IN HTR 27,16.4 IN	845.5	0.7	-.08
HTR TC IN HTR 04,16.6 IN	852.3	0.3	0.19
HTR TC IN HTR 05,16.6 IN	857.5	0.4	0.39
HTR TC IN HTR 07,16.6 IN	908.3	0.7	2.38
HTR TC IN HTR 21,16.6 IN	851.8	0.5	0.17
HTR TC IN HTR 27,16.6 IN	844.5	0.6	-.12
HTR TC IN HTR 04,16.9 IN	852.0	0.4	0.17
HTR TC IN HTR 07,16.9 IN	904.5	0.7	2.22
HTR TC IN HTR 21,16.9 IN	850.2	1.0	0.11
HTR TC IN HTR 27,16.9 IN	843.3	0.2	-.16
HTR TC IN HTR 11,18AB IN	850.0	0.3	0.10
HTR TC IN HTR 12,18AB IN	844.8	0.3	-.10
HTR TC IN HTR 14,18AB IN	859.0	9.8	0.45
HTR TC IN HTR 30,18AB IN	839.1	7.3	-.33
HTR TC IN HTR 11,18BC IN	850.8	0.3	0.13
HTR TC IN HTR 12,18BC IN	847.3	0.4	-.01
HTR TC IN HTR 14,18BC IN	904.8	17.8	2.24
HTR TC IN HTR 17,18BC IN	884.7	0.2	1.45
HTR TC IN HTR 30,18BC IN	836.9	7.2	-.41
WIRE WRAP THERMOCOUPLES			
WW TC ON HTR 12,-1 IN(DEG F)	851.2	2.9	0.14
WW TC ON HTR 16,-1 IN	847.8	0.5	0.01
WW TC ON HTR 12,01 IN	848.7	0.4	0.05
WW TC ON HTR 16,09 IN	851.5	0.5	0.16
WW TC ON HTR 04,11 IN	852.9	0.5	0.21
WW TC ON HTR 05,11 IN	850.9	0.3	0.13
WW TC ON HTR 13,11 IN	849.7	0.4	0.09
WW TC ON HTR 17,11 IN	865.1	0.4	0.69
WW TC ON HTR 28,11 IN	850.6	0.3	0.12
WW TC ON HTR 31,11 IN	849.3	0.3	0.07
WW TC ON HTR 03,13 IN	856.2	0.6	0.34
WW TC ON HTR 13,13 IN	850.6	0.4	0.12
WW TC ON HTR 15,13 IN	849.2	0.3	0.07
WW TC ON HTR 17,13 IN	858.7	0.4	0.44
WW TC ON HTR 22,13 IN	851.2	0.5	0.14
WW TC ON HTR 01,15 IN	865.9	0.5	0.72
WW TC ON HTR 03,15 IN	857.2	0.4	0.38
WW TC ON HTR 08,15 IN	933.9	1.4	3.37
WW TC ON HTR 10,15 IN	850.5	0.4	0.12
WW TC ON HTR 15,15 IN	849.9	0.3	0.10

Test 10, run 119 (continued)

INSTRUMENT	20-SEC AVG	STD DEV	NORMALIZED TEMP
WW TC ON HTR 19,15 IN	1003.7	0.4	6.10
WW TC ON HTR 25,15 IN	850.0	0.2	0.10
WW TC ON HTR 36,15 IN	903.4	0.9	2.18
WW TC ON HTR 01,17 IN	855.9	0.4	0.33
WW TC AJ HTR 02,17 IN	879.5	0.7	1.25
WW TC OP HTR 02,17 IN	887.1	1.3	1.55
WW TC ON HTR 08,17 IN	914.5	0.7	2.62
WW TC ON HTR 10,17 IN	850.6	0.4	0.12
WW TC ON HTR 11,17 IN	848.8	0.4	0.05
WW TC ON HTR 18,17 IN	931.6	0.4	3.28
WW TC ON HTR 19,17 IN	997.4	0.5	5.85
WW TC ON HTR 21,17 IN	854.8	0.4	0.29
WW TC ON HTR 22,17 IN	852.6	0.4	0.20
WW TC ON HTR 33,17 IN	855.0	0.4	0.29
WW TC ON HTR 37,17 IN	894.6	1.1	1.84
WW TC ON HTR 06,19 IN	869.5	0.5	0.86
WW TC AJ HTR 07,19 IN	944.3	1.0	3.78
WW TC OP HTR 07,19 IN	925.3	0.7	3.04
WW TC ON HTR 09,19 IN	861.6	0.3	0.55
WW TC ON HTR 14,19 IN	847.8	0.4	0.01
WW TC ON HTR 18,19 IN	977.1	0.2	5.06
WW TC ON HTR 27,19 IN	852.4	0.3	0.19
WW TC ON HTR 30,19 IN	849.2	0.3	0.07
WW TC ON HTR 34,19 IN	883.2	0.5	1.40
WW TC ON HTR 36,19 IN	966.8	0.6	4.66
WW TC ON HTR 37,19 IN	868.9	0.7	0.83
WW TC ON HTR 05,21 IN	857.2	0.4	0.38
WW TC ON HTR 06,21 IN	883.0	0.5	1.38
WW TC ON HTR 21,21 IN	853.5	0.4	0.23
WW TC ON HTR 24,21 IN	852.5	0.2	0.19
WW TC ON HTR 25,21 IN	851.4	0.5	0.15
WW TC ON HTR 27,21 IN	852.4	0.2	0.19
WW TC ON HTR 30,21 IN	849.6	0.4	0.08
WW TC ON HTR 33,21 IN	870.2	0.9	0.89
WW TC ON HTR 34,21 IN	880.3	0.9	1.28
WW TC ON HTR 04,23 IN	862.3	0.3	0.58
WW TC ON HTR 09,23 IN	872.4	0.5	0.97
WW TC ON HTR 14,23 IN	849.5	0.5	0.08
WW TC ON HTR 24,23 IN	853.0	0.4	0.21
WW TC ON HTR 28,23 IN	849.1	0.3	0.06
WW TC ON HTR 31,23 IN	866.8	0.4	0.76
WW TC ON ROD 01,25 IN	874.2	0.4	1.04
WW TC ON ROD 02,25 IN	947.7	0.5	3.91
WW TC ON ROD 05,25 IN	858.6	0.4	0.43
WW TC ON ROD 08,25 IN	897.8	0.3	1.97
WW TC ON ROD 14,25 IN	854.8	0.3	0.28
WW TC ON ROD 04,27 IN	850.8	0.1	0.13
WW TC ON ROD 07,27 IN	888.5	1.1	1.60
WW TC ON ROD 12,27 IN	852.0	0.7	0.17
WW TC ON ROD 16,27 IN	869.9	0.2	0.88
WW TC ON ROD 18,27 IN	887.1	0.2	1.55
WW TC ON ROD 03,29 IN	854.0	0.3	0.26

Test 10, run 119 (continued)

INSTRUMENT	20-SEC AVG	STD DEV	NORMALIZED TEMP
WW TC ON ROD 06,29 IN	862.9	0.4	0.60
WW TC ON ROD 10,29 IN	853.2	1.0	0.22
WW TC ON ROD 01,37 IN	891.6	0.4	1.72
WW TC ON ROD 02,37 IN	911.2	0.2	2.49
WW TC ON ROD 08,37 IN	881.0	0.4	1.31
WW TC ON ROD 14,37 IN	859.1	0.3	0.45
WW TC ON ROD 04,51 IN	861.5	0.2	0.55
WW TC ON ROD 07,51 IN	895.8	0.6	1.89
WW TC ON ROD 12,51 IN	858.2	0.1	0.42
WW TC ON ROD 16,51 IN	876.8	0.4	1.14
WW TC ON ROD 18,51 IN	895.4	0.1	1.87
WW TC ON ROD 03,63 IN	869.8	0.1	0.87
WW TC ON ROD 06,63 IN	878.3	0.4	1.20
WW TC ON ROD 10,63 IN	861.6	0.1	0.55
DUCT THERMOCOUPLES			
DUCT WALL TC,CH 38,19 IN(DEG F)	845.9	0.8	-.06
DUCT WALL TC,CH 53,19 IN	877.2	0.2	1.16
DUCT WALL TC,CH 28,21 IN	852.8	0.4	0.21
DUCT WALL TC,CH 43,21 IN	848.1	0.6	0.03
DUCT WALL TC,CH 44,21 IN	850.3	0.4	0.11
TEST SECTION HOUSING THERMOCOUPLES			
TS SHELL-BOT(DEG F)	848.9	0.7	
TS GUARD HTR-BOT	813.2	0.5	
TS HTR-BOT	758.2	0.6	
TS SHELL-LOW CTR	855.9	0.3	
TS GUARD HTR-LOW CTR	857.7	0.5	
TS HTR-LOW CTR	779.9	0.7	
TS SHELL-UP CTR	877.0	0.4	
TS GUARD HTR-UP CTR	880.8	0.7	
TS HTR-UP CTR	852.0	0.7	
TS SHELL-TOP	869.9	0.7	
TS GUARD HTR-TOP	872.5	1.6	
TS HTR-TOP	868.4	1.0	
REFERENCE BOX THERMOCOUPLES			
150 DEG REF BOX 1(DEG F)	148.2	1.1	
150 DEG REF BOX 2	148.8	0.5	
150 DEG REF BOX 3	151.7	0.8	
150 DEG REF BOX 4	149.5	0.4	
150 DEG REF BOX 5	147.9	0.2	
MISCELLANEOUS			
SOD PUMP SPEED(RPM)	684.9	20.3	
EXPANSION TANK LEVEL(% FULL)	74.5	0.2	

TEST SERIES 10(BUNDLE 3C); TEST 10 RUN 121 01/09/78 14 28 0

CONDITIONS:
TEST SECTION FLOW: 0.61 L/S (9.7 GPM)
TEST SECTION POWER
(1 ROD HEATED): 5.1 KW (9.6 KW/M/ROD)(2.9 KW/FT/ROD)

TEST SECTION INLET TEMPERATURE: 425 DEG C (797 DEG F)
TEST SECTION OUTLET TEMPERATURE: 433 DEG C (811 DEG F)

HEAT BALANCE:

HEAT INPUT FROM 31 FUEL PIN SIMULATORS: 5.1 KW
HEAT ABSORBED BY SODIUM=
FLOW X SP.HEAT X (TS OUT TEMP - TS IN TEMP) 5.3 KW
% OF INPUT HEAT ACCOUNTED FOR: 103.3 %

INSTRUMENT	20-SEC AVG	STD DEV
HEATER POWERS(KW)		
HTR POWER IN ROD 21	5.1	0.0
HTR POWER IN RODS 8,9,10	0.1	0.0
HTR POWER IN RODS 14,15,16	0.1	0.0
HTR POWER IN RODS 1,3,11,19	0.0	0.0
HTR POWER IN RODS 5,6,13,17	0.1	0.0
HTR POWER IN RODS 4,7,12,18	0.0	0.0
HTR POWER IN RODS 30,31	-0.0	0.0
HTR POWER IN RODS 24,25,27,28	-0.3	0.0
HTR POWER IN RODS 33,34	0.0	0.0
HTR POWER IN RODS 2,22,36,37	0.0	0.0
FLOWS		
TEST SECTION(TS) FLOW IN(GPM)	9.7	0.1
TS FLOW OUT(GPM)	9.6	0.1
TS BYPASS FLOW(GPM)	2.0	0.1
LOOP FLOW TOTAL(GPM)	9.9	0.2
RADIATOR AIR FLOW(CFM)	1.1	0.0
PRESSURES		
TS IN PRESS(PSIG)	13.8	0.1
TS OUT PRESS(PSIG)	6.5	0.1
PUMP OUT PRESS(PSIG)	8.5	0.1
TS LINE PRESS IN(PSIG)	12.5	0.1
EXP TANK ARGON PRESS(PSIG)	4.6	0.0
TS BYP LINE PRESS IN(PSIG)	13.3	0.1
TS BYP LINE PRESS OUT(PSIG)	10.0	0.1

Test 10, run 121 (continued)

INSTRUMENT	20-SEC AVG	STD DEV	NORMALIZED TEMP
LOOP THERMOCOUPLES			
TEST SECT INLET WELL(DEG F)	797.6	0.4	
TEST SECT OUTLET WELL(DEG F)	811.8	0.3	
PUMP IN PIPE WALL TC	807.1	4.1	
PUMP OUT PIPE WALL TC	783.3	1.2	
RAD IN PIPE WALL TC	808.7	0.5	
RAD OUT PIPE WALL TC	783.9	0.7	
HEATER INTERNAL THERMOCOUPLES			
HTR TC IN HTR 08,12AB IN(DEG F)	813.5	0.3	1.11
HTR TC IN HTR 13,12AB IN	797.7	0.3	0.01
HTR TC IN HTR 18,12AB IN	803.7	0.3	0.43
HTR TC IN HTR 22,12AB IN	812.4	0.4	1.04
HTR TC IN HTR 08,12BC IN	813.1	0.5	1.09
HTR TC IN HTR 13,12BC IN	797.8	0.5	0.02
HTR TC IN HTR 18,12BC IN	803.6	0.4	0.42
HTR TC IN HTR 22,12BC IN	811.1	0.9	0.95
HTR TC IN HTR 09,15AB IN	818.0	1.3	1.43
HTR TC IN HTR 10,15BC IN	801.5	0.9	0.28
HTR TC IN HTR 16,15BC IN	797.5	0.7	-.00
HTR TC IN HTR 25,15BC IN	795.8	0.9	-.13
HTR TC IN HTR 02,15.1 IN	805.0	0.4	0.52
HTR TC IN HTR 03,15.1 IN	805.4	0.4	0.55
HTR TC IN HTR 06,15.1 IN	799.4	0.3	0.13
HTR TC IN HTR 15,15.1 IN	796.0	0.4	-.11
HTR TC IN HTR 24,15.1 IN	78.1	0.0	****
HTR TC IN HTR 33,15.1 IN	798.7	0.9	0.08
HTR TC IN HTR 36,15.1 IN	809.4	0.6	0.83
HTR TC IN HTR 02,15.4 IN	803.2	1.2	0.40
HTR TC IN HTR 03,15.4 IN	802.5	0.4	0.34
HTR TC IN HTR 06,15.4 IN	799.4	0.3	0.12
HTR TC IN HTR 15,15.4 IN	796.0	0.5	-.11
HTR TC IN HTR 24,15.4 IN	399.9	1.0	****
HTR TC IN HTR 33,15.4 IN	798.8	1.2	0.09
HTR TC IN HTR 34,15.4 IN	718.5	98.0	****
HTR TC IN HTR 36,15.4 IN	809.6	0.6	0.84
HTR TC IN HTR 02,15.6 IN	803.6	0.3	0.42
HTR TC IN HTR 03,15.6 IN	801.5	0.4	0.28
HTR TC IN HTR 06,15.6 IN	800.1	0.3	0.18
HTR TC IN HTR 15,15.6 IN	795.4	0.5	-.15
HTR TC IN HTR 24,15.6 IN	795.7	0.7	-.13
HTR TC IN HTR 33,15.6 IN	797.6	0.3	-.00
HTR TC IN HTR 34,15.6 IN	811.5	10.1	0.98
HTR TC IN HTR 36,15.6 IN	811.7	1.2	0.99
HTR TC IN HTR 03,15.9 IN	798.2	1.3	0.04
HTR TC IN HTR 06,15.9 IN	799.7	0.7	0.15
HTR TC IN HTR 15,15.9 IN	795.4	0.5	-.15
HTR TC IN HTR 24,15.9 IN	795.7	0.4	-.13
HTR TC IN HTR 33,15.9 IN	797.6	0.3	-.00
HTR TC IN HTR 34,15.9 IN	799.0	2.1	0.10
HTR TC IN HTR 36,15.9 IN	814.1	2.1	1.16

Test 10, run 121 (continued)

INSTRUMENT	20-SEC AVG	STD DEV	NORMALIZED TEMP
HTR TC IN HTR 04,16.1 IN	799.3	0.5	0.12
HTR TC IN HTR 05,16.1 IN	799.4	0.3	0.13
HTR TC IN HTR C7,16.1 IN	803.8	0.5	0.44
HTR TC IN HTR 21,16.1 IN	874.0	0.5	5.37
HTR TC IN HTR 27,16.1 IN	796.6	1.0	-.07
HTR TC IN HTR 04,16.4 IN	800.5	0.6	0.20
HTR TC IN HTR 05,16.4 IN	799.7	0.4	0.15
HTR TC IN HTR 07,16.4 IN	803.7	0.9	0.43
HTR TC IN HTR 21,16.4 IN	876.2	0.4	5.52
HTR TC IN HTR 27,16.4 IN	796.5	0.6	-.08
HTR TC IN HTR 04,16.6 IN	799.8	0.6	0.15
HTR TC IN HTR 05,16.6 IN	799.0	0.4	0.10
HTR TC IN HTR C7,16.6 IN	804.7	0.4	0.50
HTR TC IN HTR 21,16.6 IN	887.0	0.9	6.28
HTR TC IN HTR 27,16.6 IN	795.6	0.6	-.14
HTR TC IN HTR 04,16.9 IN	799.7	0.6	0.15
HTR TC IN HTR 07,16.9 IN	804.2	0.4	0.46
HTR TC IN HTR 21,16.9 IN	885.0	0.8	6.14
HTR TC IN HTR 27,16.9 IN	794.8	0.7	-.20
HTR TC IN HTR 11,18AB IN	798.7	0.6	0.08
HTR TC IN HTR 12,18AB IN	795.7	0.9	-.14
HTR TC IN HTR 14,18AB IN	803.1	1.8	0.39
HTR TC IN HTR 30,18AB IN	806.2	7.7	0.60
HTR TC IN HTR 11,18BC IN	799.4	0.6	0.13
HTR TC IN HTR 12,18BC IN	797.0	0.9	-.04
HTR TC IN HTR 14,18BC IN	788.4	4.0	-.65
HTR TC IN HTR 17,18BC IN	798.2	0.4	0.04
HTR TC IN HTR 30,18BC IN	804.0	7.6	0.45
WIRE WRAP THERMOCOUPLES			
WW TC ON HTR 12,-1 IN(DEG F)	800.8	4.0	0.23
WW TC ON HTR 16,-1 IN	798.5	0.4	0.06
WW TC ON HTR 12,01 IN	798.9	0.4	0.09
WW TC ON HTR 16,09 IN	800.0	0.5	0.17
WW TC ON HTR 04,11 IN	801.1	0.4	0.24
WW TC ON HTR 05,11 IN	799.3	0.3	0.12
WW TC ON HTR 13,11 IN	799.2	0.4	0.11
WW TC ON HTR 17,11 IN	800.4	0.3	0.19
WW TC ON HTR 28,11 IN	801.0	0.4	0.24
WW TC ON HTR 31,11 IN	798.8	0.5	0.08
WW TC ON HTR 03,13 IN	798.1	0.8	0.03
WW TC ON HTR 13,13 IN	799.6	0.4	0.14
WW TC ON HTR 15,13 IN	799.0	0.5	0.10
WW TC ON HTR 17,13 IN	800.0	0.4	0.17
WW TC ON HTR 22,13 IN	843.9	1.2	3.25
WW TC ON HTR 01,15 IN	807.2	0.5	0.67
WW TC ON HTR 03,15 IN	800.2	1.0	0.18
WW TC ON HTR 08,15 IN	822.0	2.1	1.71
WW TC ON HTR 10,15 IN	802.0	0.5	0.31
WW TC ON HTR 15,15 IN	799.6	0.3	0.14
WW TC ON HTR 19,15 IN	807.8	0.4	0.72

Test 10, run 121 (continued)

INSTRUMENT	20-SEC AVG	STD DEV	NORMALIZED TEMP
WW TC ON HTR 25.15 IN	800.2	0.5	0.18
WW TC ON HTR 36.15 IN	810.9	1.0	0.93
WW TC ON HTR 01.17 IN	801.5	0.5	0.28
WW TC AJ HTR 02.17 IN	818.8	0.5	1.49
WW TC OP HTR 02.17 IN	813.9	0.4	1.14
WW TC ON HTR 08.17 IN	834.3	0.9	2.58
WW TC ON HTR 10.17 IN	800.4	0.4	0.20
WW TC ON HTR 11.17 IN	799.4	0.3	0.13
WW TC ON HTR 18.17 IN	805.5	0.5	0.55
WW TC ON HTR 19.17 IN	822.8	0.4	1.77
WW TC ON HTR 21.17 IN	864.4	0.5	4.69
WW TC ON HTR 22.17 IN	811.9	1.1	1.00
WW TC ON HTR 33.17 IN	801.5	0.5	0.28
WW TC ON HTR 37.17 IN	840.9	1.4	3.04
WW TC ON HTR 06.19 IN	801.1	0.3	0.25
WW TC AJ HTR 07.19 IN	813.6	0.4	1.12
WW TC OP HTR 07.19 IN	810.8	0.4	0.93
WW TC ON HTR 09.19 IN	818.1	1.8	1.44
WW TC ON HTR 14.19 IN	799.1	0.4	0.11
WW TC ON HTR 18.19 IN	811.0	0.4	0.94
WW TC ON HTR 27.19 IN	803.3	0.4	0.40
WW TC ON HTR 30.19 IN	799.4	0.3	0.13
WW TC ON HTR 34.19 IN	800.8	0.8	0.23
WW TC ON HTR 36.19 IN	824.1	0.7	1.86
WW TC ON HTR 37.19 IN	837.9	0.7	2.83
WW TC ON HTR 05.21 IN	801.1	0.2	0.24
WW TC ON HTR 06.21 IN	802.7	0.4	0.36
WW TC ON HTR 21.21 IN	844.5	0.4	3.30
WW TC ON HTR 24.21 IN Jeff	804.8	0.4	0.50
WW TC ON HTR 25.21 IN	802.5	0.5	0.34
WW TC ON HTR 27.21 IN	803.1	0.5	0.39
WW TC ON HTR 30.21 IN	799.3	0.4	0.12
WW TC ON HTR 33.21 IN	802.9	1.0	0.37
WW TC ON HTR 34.21 IN	814.3	1.1	1.18
WW TC ON HTR 04.23 IN	805.1	0.5	0.53
WW TC ON HTR 09.23 IN	844.2	0.8	3.27
WW TC ON HTR 14.23 IN	799.2	0.5	0.11
WW TC ON HTR 24.23 IN	805.3	0.3	0.54
WW TC ON HTR 28.23 IN	799.6	0.4	0.14
WW TC ON HTR 31.23 IN	803.7	0.4	0.43
WW TC ON ROD 01.25 IN	802.1	0.3	0.32
WW TC ON ROD 02.25 IN	815.9	0.3	1.29
WW TC ON ROD 05.25 IN	803.6	0.1	0.42
WW TC ON ROD 08.25 IN	836.0	0.3	2.70
WW TC ON ROD 14.25 IN	802.6	0.3	0.35
WW TC ON ROD 04.27 IN	800.3	0.2	0.19
WW TC ON ROD 07.27 IN	806.8	1.3	0.65
WW TC ON ROD 12.27 IN	803.0	0.7	0.38
WW TC ON ROD 16.27 IN	806.8	0.2	0.65
WW TC ON ROD 18.27 IN	813.5	0.2	1.12
WW TC ON ROD 03.29 IN	801.7	0.4	0.29
WW TC ON ROD 06.29 IN	802.0	0.3	0.31

Test 10, run 121 (continued)

INSTRUMENT	20-SEC AVG	STD DEV	NORMALIZED TEMP
WW TC ON ROD 10,29 IN	806.3	0.9	0.61
WW TC ON ROD 01,37 IN	808.5	0.2	0.77
WW TC ON ROD 02,37 IN	821.1	0.4	1.65
WW TC ON ROD 08,37 IN	831.0	0.3	2.35
WW TC ON ROD 14,37 IN	804.4	0.1	0.48
WW TC ON ROD C4,51 IN	804.4	0.1	0.48
WW TC ON ROD C7,51 IN	814.5	0.5	1.19
WW TC ON ROD 12,51 IN	806.5	0.7	0.63
WW TC ON ROD 16,51 IN	810.2	0.4	0.88
WW TC ON ROD 18,51 IN	818.1	0.5	1.44
WW TC ON ROD C3,63 IN	809.4	0.2	0.83
WW TC ON ROD C6,63 IN	809.4	0.4	0.83
WW TC ON ROD 10,63 IN	809.0	0.8	0.80
DUCT THERMOCOUPLES			
DUCT WALL TC,CH 38,19 IN(DEG F)	798.1	0.9	0.04
DUCT WALL TC,CH 53,19 IN	818.5	0.0	1.47
DUCT WALL TC,CH 28,21 IN	841.1	0.4	3.06
DUCT WALL TC,CH 43,21 IN	799.1	0.8	0.10
DUCT WALL TC,CH 44,21 IN	800.5	0.4	0.20
TEST SECTION HOUSING THERMOCOUPLES			
TS SHELL-BOT(DEG F)	798.0	0.5	
TS GUARD HTR-BOT	764.9	0.6	
TS HTR-BOT	709.8	0.6	
TS SHELL-LOW CTR	809.6	0.4	
TS GUARD HTR-LOW CTR	828.4	1.0	
TS HTR-LOW CTR	774.0	0.6	
TS SHELL-UP CTR	817.4	0.4	
TS GUARD HTR-UP CTR	832.6	1.0	
TS HTR-UP CTR	816.7	0.9	
TS SHELL-TOP	809.2	1.0	
TS GUARD HTR-TOP	809.7	1.3	
TS HTR-TOP	792.2	1.4	
REFERENCE BOX THERMOCOUPLES			
150 DEG REF BOX 1(DEG F)	147.8	1.0	
150 DEG REF BOX 2	148.9	0.8	
150 DEG REF BOX 3	151.6	0.7	
150 DEG REF BOX 4	149.6	0.6	
150 DEG REF BOX 5	148.0	0.3	
MISCELLANEOUS			
SOD PUMP SPEED(RPM)	492.3	15.9	
EXPANSION TANK LEVEL(% FULL)	73.3	0.2	

TEST SERIES 10(BUNDLE 3C); TEST 10 RUN 122 01/17/78 15 20 31

CONDITIONS:
TEST SECTION FLOW: 0.62 L/S (9.9 GPM)
TEST SECTION POWER
(1 ROD HEATED): 5.1 KW (9.5 KW/M/ROD)(2.9 KW/FT/ROD)

TEST SECTION INLET TEMPERATURE: 448 DEG C (839 DEG F)
TEST SECTION OUTLET TEMPERATURE: 455 DEG C (852 DEG F)

HEAT BALANCE:

HEAT INPUT FROM 31 FUEL PIN SIMULATORS: 5.1 KW
HEAT ABSORBED BY SODIUM=
FLOW X SP.HEAT X (TS OUT TEMP - TS IN TEMP) 5.0 KW
% OF INPUT HEAT ACCOUNTED FOR: 98.4 %

INSTRUMENT	20-SEC AVG	STD DEV
HEATER POWERS(KW)		
HTR POWER IN ROD 22	5.1	0.0
HTR POWER IN RODS 8,9,10	0.1	0.0
HTR POWER IN RODS 14,15,16	0.0	0.0
HTR POWER IN RODS 1,3,11,19	0.0	0.0
HTR POWER IN RODS 5,6,13,17	0.1	0.0
HTR POWER IN RODS 4,7,12,18	0.0	0.0
HTR POWER IN RODS 30,31	-0.0	0.0
HTR POWER IN RODS 24,25,27,28	-0.4	0.0
HTR POWER IN RODS 33,34	-0.0	0.0
HTR POWER IN RODS 2,21,36,37	0.0	0.0
FLOWS		
TEST SECTION(TS) FLOW IN(GPM)	9.9	0.1
TS FLOW OUT(GPM)	9.9	0.1
TS BYPASS FLOW(GPM)	1.4	0.1
LOOP FLOW TOTAL(GPM)	10.0	0.2
RADIATOR AIR FLOW(CFM)	1.1	0.0
PRESSURES		
TS IN PRESS(PSIG)	12.6	0.1
TS OUT PRESS(PSIG)	5.9	0.0
PUMP OUT PRESS(PSIG)	7.8	0.0
TS LINE PRESS IN(PSIG)	11.5	0.1
EXP TANK ARGON PRESS(PSIG)	2.3	0.1
TS BYP LINE PRESS IN(PSIG)	12.7	0.1
TS BYP LINE PRESS OUT(PSIG)	9.3	0.1

Test 10, run 122 (continued)

INSTRUMENT	20-SEC AVG	STD DEV	NORMALIZED TEMP
LOOP THERMOCOUPLES			
TEST SECT INLET WELL(DEG F)	839.2	0.4	
TEST SECT OUTLET WELL(DEG F)	852.7	0.4	
PUMP IN PIPE WALL TC	847.7	4.3	
PUMP OUT PIPE WALL TC	824.7	1.0	
RAD IN PIPE WALL TC	849.0	0.4	
RAD OUT PIPE WALL TC	826.0	0.4	
HEATER INTERNAL THERMOCOUPLES			
HTR TC IN HTR 08,12AB IN(DEG F)	848.6	0.4	0.70
HTR TC IN HTR 13,12AB IN	838.8	0.4	-.03
HTR TC IN HTR 18,12AB IN	840.4	0.4	0.09
HTR TC IN HTR 22,12AB IN	915.4	0.4	5.65
HTR TC IN HTR 08,12BC IN	848.5	0.4	0.69
HTR TC IN HTR 13,12BC IN	838.6	0.6	-.05
HTR TC IN HTR 18,12BC IN	840.6	0.4	0.10
HTR TC IN HTR 22,12BC IN	913.4	1.0	5.51
HTR TC IN HTR 09,15AB IN	838.4	8.7	-.06
HTR TC IN HTR 10,15BC IN	850.4	0.4	0.83
HTR TC IN HTR 16,15BC IN	837.6	0.5	-.12
HTR TC IN HTR 25,15BC IN	837.2	0.7	-.15
HTR TC IN HTR 02,15.1 IN	844.5	0.4	0.40
HTR TC IN HTR 03,15.1 IN	844.8	0.4	0.41
HTR TC IN HTR 06,15.1 IN	841.3	0.5	0.16
HTR TC IN HTR 15,15.1 IN	837.2	0.5	-.15
HTR TC IN HTR 24,15.1 IN	840.1	0.8	0.07
HTR TC IN HTR 33,15.1 IN	839.3	0.2	0.00
HTR TC IN HTR 36,15.1 IN	843.9	0.5	0.34
HTR TC IN HTR 02,15.4 IN	843.8	0.5	0.34
HTR TC IN HTR 03,15.4 IN	843.7	0.6	0.33
HTR TC IN HTR 06,15.4 IN	840.5	0.6	0.10
HTR TC IN HTR 15,15.4 IN	836.7	0.5	-.19
HTR TC IN HTR 24,15.4 IN	839.2	0.8	-.00
HTR TC IN HTR 33,15.4 IN	839.3	0.3	0.01
HTR TC IN HTR 34,15.4 IN	868.0	2.3	2.14
HTR TC IN HTR 36,15.4 IN	843.3	0.2	0.30
HTR TC IN HTR 02,15.6 IN	844.9	0.2	0.42
HTR TC IN HTR 03,15.6 IN	843.6	0.5	0.33
HTR TC IN HTR 06,15.6 IN	841.4	0.4	0.16
HTR TC IN HTR 15,15.6 IN	836.4	0.4	-.21
HTR TC IN HTR 24,15.6 IN	840.4	0.5	0.09
HTR TC IN HTR 33,15.6 IN	838.8	0.6	-.03
HTR TC IN HTR 34,15.6 IN	843.4	4.4	0.31
HTR TC IN HTR 36,15.6 IN	843.4	0.7	0.31
HTR TC IN HTR 03,15.9 IN	840.5	2.2	0.10
HTR TC IN HTR 06,15.9 IN	841.3	0.4	0.15
HTR TC IN HTR 15,15.9 IN	836.6	0.4	-.19
HTR TC IN HTR 24,15.9 IN	839.6	0.4	0.03
HTR TC IN HTR 33,15.9 IN	837.2	0.4	-.15
HTR TC IN HTR 34,15.9 IN	838.9	0.5	-.02
HTR TC IN HTR 36,15.9 IN	843.6	1.1	0.32

Test 10, run 122 (continued)

INSTRUMENT	20-SEC AVG	STD DEV	NORMALIZED TEMP
HTR TC IN HTR 04,16.1 IN	840.9	0.6	0.12
HTR TC IN HTR 05,16.1 IN	841.2	0.4	0.15
HTR TC IN HTR 07,16.1 IN	843.8	0.6	0.34
HTR TC IN HTR 21,16.1 IN	885.8	1.2	3.46
HTR TC IN HTR 27,16.1 IN	838.0	0.9	-.09
HTR TC IN HTR 04,16.4 IN	840.0	0.8	0.06
HTR TC IN HTR 05,16.4 IN	840.8	0.7	0.11
HTR TC IN HTR 07,16.4 IN	844.0	0.6	0.36
HTR TC IN HTR 21,16.4 IN	883.2	2.5	3.27
HTR TC IN HTR 27,16.4 IN	838.1	0.7	-.08
HTR TC IN HTR 04,16.6 IN	842.3	0.4	0.23
HTR TC IN HTR 05,16.6 IN	841.1	0.4	0.14
HTR TC IN HTR 07,16.6 IN	844.1	0.4	0.36
HTR TC IN HTR 21,16.6 IN	883.4	3.5	3.28
HTR TC IN HTR 27,16.6 IN	837.2	0.8	-.15
HTR TC IN HTR 04,16.9 IN	841.7	0.7	0.19
HTR TC IN HTR 07,16.9 IN	844.8	0.4	0.41
HTR TC IN HTR 21,16.9 IN	883.1	3.0	3.26
HTR TC IN HTR 27,16.9 IN	836.9	0.7	-.17
HTR TC IN HTR 11,18AB IN	841.4	0.4	0.16
HTR TC IN HTR 12,18AB IN	837.3	0.6	-.14
HTR TC IN HTR 14,18AB IN	851.9	9.9	0.94
HTR TC IN HTR 30,18AB IN	827.8	7.4	-.85
HTR TC IN HTR 11,18BC IN	841.4	0.4	0.16
HTR TC IN HTR 12,18BC IN	838.0	0.6	-.09
HTR TC IN HTR 14,18BC IN	934.5	10.5	7.07
HTR TC IN HTR 17,18BC IN	837.9	0.4	-.10
HTR TC IN HTR 30,18BC IN	825.3	7.2	****
WIRE WRAP THERMOCOUPLES			
WW TC ON HTR 12,-1 IN(DEG F)	840.9	2.1	0.12
WW TC ON HTR 16,-1 IN	841.0	0.4	0.13
WW TC ON HTR 12,01 IN	840.0	3.0	0.06
WW TC ON HTR 16,09 IN	842.1	0.5	0.21
WW TC ON HTR 04,11 IN	842.8	0.6	0.27
WW TC ON HTR 05,11 IN	840.5	0.4	0.10
WW TC ON HTR 13,11 IN	840.8	0.3	0.12
WW TC ON HTR 17,11 IN	841.4	0.4	0.16
WW TC ON HTR 28,11 IN	843.4	0.3	0.31
WW TC ON HTR 31,11 IN	839.7	0.5	0.03
WW TC ON HTR 03,13 IN	840.6	1.2	0.11
WW TC ON HTR 13,13 IN	840.9	0.2	0.12
WW TC ON HTR 15,13 IN	840.5	0.5	0.10
WW TC ON HTR 17,13 IN	841.4	0.4	0.16
WW TC ON HTR 22,13 IN	916.0	0.5	5.70
WW TC ON HTR 01,15 IN	847.5	0.2	0.61
WW TC ON HTR 03,15 IN	843.5	0.5	0.32
WW TC ON HTR 08,15 IN	849.1	0.7	0.74
WW TC ON HTR 10,15 IN	849.9	1.4	0.79
WW TC ON HTR 15,15 IN	840.8	0.3	0.12
WW TC ON HTR 19,15 IN	846.6	0.3	0.55

Test 10, run 122 (continued)

INSTRUMENT	20-SEC AVG	STD DEV	NORMALIZED TEMP
WW TC ON HTR 25.15 IN	842.9	0.4	0.28
WW TC ON HTR 36.15 IN	845.7	1.3	0.48
WW TC ON HTR 01.17 IN	841.7	0.5	0.19
WW TC AJ HTR 02.17 IN	853.9	0.4	1.09
WW TC OP HTR 02.17 IN	850.3	0.4	0.82
WW TC ON HTR 08.17 IN	860.0	0.3	1.54
WW TC ON HTR 10.17 IN	843.9	0.6	0.35
WW TC ON HTR 11.17 IN	841.4	0.5	0.16
WW TC ON HTR 18.17 IN	845.0	0.3	0.43
WW TC ON HTR 19.17 IN	852.4	0.3	0.98
WW TC ON HTR 21.17 IN	897.0	0.9	4.29
WW TC ON HTR 22.17 IN	883.4	0.5	3.28
WW TC ON HTR 33.17 IN	842.8	0.6	0.26
WW TC ON HTR 37.17 IN	869.9	1.1	2.28
WW TC ON HTR 06.19 IN	842.0	0.5	0.21
WW TC AJ HTR 07.19 IN	848.3	0.4	0.67
WW TC OP HTR 07.19 IN	846.0	0.6	0.50
WW TC ON HTR 09.19 IN	881.1	0.4	3.11
WW TC ON HTR 14.19 IN	840.8	0.3	0.12
WW TC ON HTR 18.19 IN	848.4	0.4	0.68
WW TC ON HTR 27.19 IN	845.6	0.5	0.47
WW TC ON HTR 30.19 IN	840.8	0.3	0.12
WW TC ON HTR 34.19 IN	839.0	1.2	-.01
WW TC ON HTR 36.19 IN	855.3	0.8	1.19
WW TC ON HTR 37.19 IN	879.0	0.6	2.95
WW TC ON HTR 05.21 IN	841.7	0.2	0.18
WW TC ON HTR 06.21 IN	842.5	0.4	0.24
WW TC ON HTR 21.21 IN	892.8	1.1	3.98
WW TC ON HTR 24.21 IN	849.7	0.4	0.78
WW TC ON HTR 25.21 IN	845.6	0.8	0.47
WW TC ON HTR 27.21 IN	845.6	0.5	0.47
WW TC ON HTR 30.21 IN	840.6	0.4	0.11
WW TC ON HTR 33.21 IN	841.9	0.8	0.20
WW TC ON HTR 34.21 IN	846.7	1.1	0.56
WW TC ON HTR 04.23 IN	846.0	0.5	0.51
WW TC ON HTR 09.23 IN	886.7	0.5	3.53
WW TC ON HTR 14.23 IN	840.6	0.4	0.11
WW TC ON HTR 24.23 IN	853.0	0.4	1.03
WW TC ON HTR 28.23 IN	840.8	0.4	0.12
WW TC ON HTR 31.23 IN	842.6	0.4	0.25
WW TC ON ROD 01.25 IN	841.5	0.3	0.17
WW TC ON ROD 02.25 IN	851.1	0.4	0.88
WW TC ON ROD 05.25 IN	845.5	0.4	0.47
WW TC ON ROD 08.25 IN	871.5	0.0	2.39
WW TC ON ROD 14.25 IN	844.9	0.3	0.42
WW TC ON ROD 04.27 IN	841.6	0.2	0.18
WW TC ON ROD 07.27 IN	846.3	1.2	0.52
WW TC ON ROD 12.27 IN	845.6	1.2	0.47
WW TC ON ROD 16.27 IN	846.4	0.7	0.53
WW TC ON ROD 18.27 IN	850.8	0.2	0.86
WW TC ON ROD 03.29 IN	844.4	0.4	0.39
WW TC ON ROD 06.29 IN	841.9	0.3	0.20

Test 10, run 122 (continued)

INSTRUMENT	20-SEC AVG	STD DEV	NORMALIZED TEMP
WW TC ON ROD 10,29 IN	853.2	1.2	1.04
WW TC ON ROD 01,37 IN	846.6	0.2	0.55
WW TC ON ROD 02,37 IN	859.8	0.2	1.53
WW TC ON ROD 08,37 IN	871.5	0.1	2.39
WW TC ON ROD 14,37 IN	846.6	0.3	0.55
WW TC ON ROD 04,51 IN	845.0	0.0	0.43
WW TC ON ROD 07,51 IN	853.7	0.5	1.07
WW TC ON ROD 12,51 IN	849.2	0.2	0.74
WW TC ON ROD 16,51 IN	850.0	0.1	0.80
WW TC ON ROD 18,51 IN	856.7	0.5	1.30
WW TC ON ROD 03,63 IN	850.9	0.2	0.87
WW TC ON ROD 06,63 IN	849.0	0.3	0.72
WW TC ON ROD 10,63 IN	853.3	0.1	1.05
DUCT THERMOCOUPLES			
DUCT WALL TC,CH 38,19 IN(DEG F)	839.5	0.9	0.02
DUCT WALL TC,CH 53,19 IN	850.1	0.2	0.80
DUCT WALL TC,CH 28,21 IN	878.1	0.2	2.89
DUCT WALL TC,CH 43,21 IN	840.3	0.9	0.08
DUCT WALL TC,CH 44,21 IN	841.9	0.4	0.20
TEST SECTION HOUSING THERMOCOUPLES			
TS SHELL-BOT(DEG F)	840.5	0.5	
TS GUARD HTR-BOT	810.1	0.4	
TS HTR-BOT	757.9	0.5	
TS SHELL-LOW CTR	855.6	0.3	
TS GUARD HTR-LOW CTR	854.6	1.0	
TS HTR-LOW CTR	778.8	0.5	
TS SHELL-UP CTR	859.8	0.4	
TS GUARD HTR-UP CTR	872.7	0.8	
TS HTR-UP CTR	848.4	0.9	
TS SHELL-TOP	851.8	0.9	
TS GUARD HTR-TOP	861.6	1.7	
TS HTR-TOP	866.0	1.4	
REFERENCE BOX THERMOCOUPLES			
150 DEG REF BOX 1(DEG F)	147.7	1.1	
150 DEG REF BOX 2	148.2	0.8	
150 DEG REF BOX 3	151.8	0.9	
150 DEG REF BOX 4	149.2	0.5	
150 DEG REF BOX 5	146.5	0.4	
MISCELLANEOUS			
SOD PUMP SPEED(RPM)	492.4	12.6	
EXPANSION TANK LEVEL(% FULL)	74.7	0.1	

TEST SERIES 10(BUNDLE 3C); TEST 10 RUN 124 01/18/78 11 2 46

CONDITIONS:

TEST SECTION FLOW: 0.62 L/S (9.8 GPM)

TEST SECTION POWER
(1 ROD HEATED): 5.1 KW (9.6 KW/M/ROD)(2.9 KW/FT/ROD)

TEST SECTION INLET TEMPERATURE: 443 DEG C (831 DEG F)

TEST SECTION OUTLET TEMPERATURE: 451 DEG C (844 DEG F)

HEAT BALANCE:

HEAT INPUT FROM 31 FUEL PIN SIMULATORS: 5.1 KW

HEAT ABSORBED BY SODIUM=
FLOW X SP.HEAT X (TS OUT TEMP - TS IN TEMP) 5.0 KW

% OF INPUT HEAT ACCOUNTED FOR: 98.8 %

INSTRUMENT	20-SEC AVG	STD DEV
HEATER POWERS(KW)		
HTR POWER IN ROD 24	5.1	0.0
HTR POWER IN RODS 8,9,10	0.1	0.0
HTR POWER IN RODS 14,15,16	0.1	0.0
HTR POWER IN RODS 1,3,11,19	0.0	0.0
HTR POWER IN RODS 5,6,13,17	0.1	0.0
HTR POWER IN RODS 4,7,12,18	0.0	0.0
HTR POWER IN RODS 30,31	-0.0	0.0
HTR POWER IN RODS 2,25,27,28	-0.3	0.0
HTR POWER IN RODS 33,34	-0.0	0.0
HTR POWER IN RODS 21,22,36,37	0.0	0.0
FLOWS		
TEST SECTION(TS) FLOW IN(GPM)	9.8	0.1
TS FLOW OUT(GPM)	9.8	0.1
TS BYPASS FLOW(GPM)	-0.2	0.1
LOOP FLOW TOTAL(GPM)	9.9	0.2
RADIATOR AIR FLOW(CFM)	1.2	0.0
PRESSURES		
TS IN PRESS(PSIG)	12.8	0.1
TS OUT PRESS(PSIG)	6.0	0.0
PUMP OUT PRESS(PSIG)	7.9	0.0
TS LINE PRESS IN(PSIG)	11.7	0.1
EXP TANK ARGON PRESS(PSIG)	2.4	0.1
TS BYP LINE PRESS IN(PSIG)	12.8	0.1
TS BYP LINE PRESS OUT(PSIG)	9.5	0.1

Test 10, run 124 (continued)

INSTRUMENT	20-SEC AVG	STD DEV	NORMALIZED TEMP
LOOP THERMOCOUPLES			
TEST SECT INLET WELL(DEG F)	831.1	0.4	
TEST SECT OUTLET WELL(DEG F)	844.7	0.4	
PUMP IN PIPE WALL TC	837.8	4.4	
PUMP OUT PIPE WALL TC	814.9	0.9	
RAD IN PIPE WALL TC	839.2	0.1	
RAD OUT PIPE WALL TC	815.8	0.6	
HEATER INTERNAL THERMOCOUPLES			
HTR TC IN HTR 08,12AB IN(DEG F)	834.1	0.5	0.22
HTR TC IN HTR 13,12AB IN	830.7	0.4	-.03
HTR TC IN HTR 18,12AB IN	829.9	0.4	-.09
HTR TC IN HTR 22,12AB IN	839.3	6.3	0.60
HTR TC IN HTR 08,12BC IN	834.3	0.5	0.23
HTR TC IN HTR 13,12BC IN	830.4	0.6	-.05
HTR TC IN HTR 18,12BC IN	830.3	0.4	-.06
HTR TC IN HTR 22,12BC IN	845.1	1.3	1.03
HTR TC IN HTR 09,15AB IN	826.1	8.9	-.37
HTR TC IN HTR 10,15BC IN	844.2	0.5	0.96
HTR TC IN HTR 16,15BC IN	829.4	0.6	-.12
HTR TC IN HTR 25,15BC IN	850.3	1.8	1.41
HTR TC IN HTR 02,15.1 IN	833.3	0.6	0.16
HTR TC IN HTR 03,15.1 IN	835.1	0.3	0.30
HTR TC IN HTR 06,15.1 IN	832.1	0.5	0.07
HTR TC IN HTR 15,15.1 IN	829.2	0.3	-.14
HTR TC IN HTR 24,15.1 IN	909.5	0.6	5.75
HTR TC IN HTR 33,15.1 IN	830.9	0.2	-.01
HTR TC IN HTR 36,15.1 IN	831.0	0.6	-.01
HTR TC IN HTR 02,15.4 IN	832.6	1.8	0.11
HTR TC IN HTR 03,15.4 IN	833.6	1.4	0.18
HTR TC IN HTR 06,15.4 IN	830.8	1.0	-.02
HTR TC IN HTR 15,15.4 IN	828.6	0.7	-.18
HTR TC IN HTR 24,15.4 IN	912.8	0.7	5.99
HTR TC IN HTR 33,15.4 IN	830.8	0.4	-.02
HTR TC IN HTR 34,15.4 IN	845.8	44.8	1.08
HTR TC IN HTR 36,15.4 IN	830.2	0.4	-.06
HTR TC IN HTR 02,15.6 IN	834.4	0.3	0.24
HTR TC IN HTR 03,15.6 IN	835.6	0.5	0.33
HTR TC IN HTR 06,15.6 IN	831.5	0.5	0.03
HTR TC IN HTR 15,15.6 IN	828.4	0.6	-.20
HTR TC IN HTR 24,15.6 IN	917.5	0.7	6.34
HTR TC IN HTR 33,15.6 IN	830.0	0.3	-.08
HTR TC IN HTR 34,15.6 IN	833.8	8.1	0.20
HTR TC IN HTR 36,15.6 IN	830.1	0.5	-.07
HTR TC IN HTR 03,15.9 IN	833.7	1.2	0.20
HTR TC IN HTR 06,15.9 IN	831.8	0.2	0.05
HTR TC IN HTR 15,15.9 IN	828.4	0.5	-.19
HTR TC IN HTR 24,15.9 IN	917.6	0.3	6.35
HTR TC IN HTR 33,15.9 IN	828.8	0.4	-.17
HTR TC IN HTR 34,15.9 IN	828.9	1.2	-.16

Test 10, run 124 (continued)

INSTRUMENT	20-SEC AVG	STD DEV	NORMALIZED TEMP
HTR TC IN HTR 36,15.9 IN	830.3	1.5	-.06
HTR TC IN HTR 04,16.1 IN	833.3	0.7	0.17
HTR TC IN HTR 05,16.1 IN	832.2	0.5	0.08
HTR TC IN HTR 07,16.1 IN	832.6	0.7	0.11
HTR TC IN HTR 21,16.1 IN	854.9	0.9	1.75
HTR TC IN HTR 27,16.1 IN	830.2	0.8	-.07
HTR TC IN HTR 04,16.4 IN	832.3	0.7	0.09
HTR TC IN HTR 05,16.4 IN	832.7	0.7	0.12
HTR TC IN HTR 07,16.4 IN	832.7	0.7	0.12
HTR TC IN HTR 21,16.4 IN	852.7	1.6	1.58
HTR TC IN HTR 27,16.4 IN	830.1	0.9	-.07
HTR TC IN HTR 04,16.6 IN	834.3	0.7	0.24
HTR TC IN HTR 05,16.6 IN	831.8	0.2	0.05
HTR TC IN HTR 07,16.6 IN	833.8	0.4	0.20
HTR TC IN HTR 21,16.6 IN	846.1	2.0	1.11
HTR TC IN HTR 27,16.6 IN	829.1	1.0	-.14
HTR TC IN HTR 04,16.9 IN	834.1	0.8	0.22
HTR TC IN HTR 07,16.9 IN	834.1	0.3	0.22
HTR TC IN HTR 21,16.9 IN	844.9	2.6	1.01
HTR TC IN HTR 27,16.9 IN	828.6	1.0	-.18
HTR TC IN HTR 11,18AB IN	840.5	0.7	0.69
HTR TC IN HTR 12,18AB IN	831.6	0.9	0.04
HTR TC IN HTR 14,18AB IN	844.1	10.0	0.96
HTR TC IN HTR 30,18AB IN	829.1	7.4	-.15
HTR TC IN HTR 11,18BC IN	840.7	0.5	0.70
HTR TC IN HTR 12,18BC IN	832.4	1.0	0.10
HTR TC IN HTR 14,18BC IN	803.2	13.4	****
HTR TC IN HTR 17,18BC IN	829.2	0.2	-.13
HTR TC IN HTR 30,18BC IN	826.7	7.3	-.32
WIRE WRAP THERMOCOUPLES			
WW TC ON HTR 12,-1 IN(DEG F)	834.2	2.6	0.23
WW TC ON HTR 16,-1 IN	832.5	0.5	0.11
WW TC ON HTR 12,01 IN	831.4	0.4	0.03
WW TC ON HTR 16,09 IN	832.8	0.6	0.13
WW TC ON HTR 04,11 IN	835.7	0.4	0.34
WW TC ON HTR 05,11 IN	832.1	0.4	0.07
WW TC ON HTR 13,11 IN	833.1	0.6	0.15
WW TC ON HTR 17,11 IN	831.8	0.1	0.05
WW TC ON HTR 28,11 IN	834.2	0.4	0.23
WW TC ON HTR 31,11 IN	831.4	0.4	0.02
WW TC ON HTR 03,13 IN	831.5	0.7	0.03
WW TC ON HTR 13,13 IN	832.7	0.7	0.12
WW TC ON HTR 15,13 IN	832.0	0.4	0.07
WW TC ON HTR 17,13 IN	831.7	0.2	0.05
WW TC ON HTR 22,13 IN	848.1	0.6	1.25
WW TC ON HTR 01,15 IN	839.3	0.3	0.60
WW TC ON HTR 03,15 IN	835.5	0.4	0.32
WW TC ON HTR 08,15 IN	832.8	1.3	0.13
WW TC ON HTR 10,15 IN	852.9	0.4	1.60

Test 10, run 124 (continued)

INSTRUMENT	20-SEC AVG	STD DEV	NORMALIZED TEMP
WW TC ON HTR 15,15 IN	832.3	0.5	0.09
WW TC ON HTR 19,15 IN	835.2	0.3	0.30
WW TC ON HTR 25,15 IN	838.8	1.3	0.56
WW TC ON HTR 36,15 IN	833.5	1.1	0.18
WW TC ON HTR 01,17 IN	834.5	0.4	0.25
WW TC AJ HTR 02,17 IN	838.5	0.5	0.54
WW TC OP HTR 02,17 IN	837.2	0.4	0.45
WW TC ON HTR 08,17 IN	838.4	0.3	0.54
WW TC ON HTR 10,17 IN	874.1	0.5	3.16
WW TC ON HTR 11,17 IN	849.2	1.0	1.33
WW TC ON HTR 18,17 IN	834.7	0.4	0.27
WW TC ON HTR 19,17 IN	836.9	0.5	0.43
WW TC ON HTR 21,17 IN	854.1	0.5	1.69
WW TC ON HTR 22,17 IN	868.8	0.6	2.76
WW TC ON HTR 33,17 IN	833.9	0.4	0.21
WW TC ON HTR 37,17 IN	841.6	1.2	0.77
WW TC ON HTR 06,19 IN	833.3	0.4	0.16
WW TC AJ HTR 07,19 IN	835.9	0.4	0.35
WW TC OP HTR 07,19 IN	834.7	0.4	0.27
WW TC ON HTR 09,19 IN	850.7	0.5	1.44
WW TC ON HTR 14,19 IN	832.7	0.5	0.12
WW TC ON HTR 18,19 IN	835.9	0.4	0.35
WW TC ON HTR 27,19 IN	837.4	0.3	0.46
WW TC ON HTR 30,19 IN	832.3	0.5	0.09
WW TC ON HTR 34,19 IN	828.5	0.8	-.19
WW TC ON HTR 36,19 IN	837.1	0.8	0.44
WW TC ON HTR 37,19 IN	858.0	0.8	1.98
WW TC ON HTR 05,21 IN	834.3	0.2	0.23
WW TC ON HTR 06,21 IN	833.3	0.4	0.16
WW TC ON HTR 21,21 IN	869.9	0.6	2.85
WW TC ON HTR 24,21 IN	901.8	0.4	5.19
WW TC ON HTR 25,21 IN	864.7	1.4	2.46
WW TC ON HTR 27,21 IN	837.7	0.4	0.48
WW TC ON HTR 30,21 IN	831.9	0.3	0.06
WW TC ON HTR 33,21 IN	831.9	1.2	0.06
WW TC ON HTR 34,21 IN	831.7	1.0	0.05
WW TC ON HTR 04,23 IN	842.3	0.4	0.82
WW TC ON HTR 09,23 IN	853.7	0.5	1.66
WW TC ON HTR 14,23 IN	832.3	0.6	0.09
WW TC ON HTR 24,23 IN	896.2	0.2	4.78
WW TC ON HTR 28,23 IN	832.4	0.6	0.10
WW TC ON HTR 31,23 IN	833.3	0.4	0.16
WW TC ON ROD 01,25 IN	831.8	0.1	0.05
WW TC ON ROD 02,25 IN	835.9	0.2	0.35
WW TC ON ROD 05,25 IN	837.5	0.2	0.47
WW TC ON ROD 08,25 IN	852.4	0.2	1.56
WW TC ON ROD 14,25 IN	836.5	0.4	0.40
WW TC ON ROD 04,27 IN	834.8	0.4	0.28
WW TC ON ROD 07,27 IN	836.5	1.3	0.40
WW TC ON ROD 12,27 IN	839.6	0.8	0.62
WW TC ON ROD 16,27 IN	836.6	0.3	0.41

Test 10, run 124 (continued)

INSTRUMENT	20-SEC AVG	STD DEV	NORMALIZED TEMP
WW TC ON ROD 18,27 IN	837.5	0.2	0.47
WW TC ON ROD 03,29 IN	851.9	0.4	1.53
WW TC ON ROD 06,29 IN	833.0	0.4	0.14
WW TC ON ROD 10,29 IN	869.1	1.3	2.79
WW TC ON ROD 01,37 IN	835.8	0.2	0.35
WW TC ON ROD 02,37 IN	843.5	0.3	0.91
WW TC ON ROD 08,37 IN	853.2	0.3	1.62
WW TC ON ROD 14,37 IN	838.0	0.4	0.51
WW TC ON ROD 04,51 IN	838.9	0.4	0.57
WW TC ON ROD 07,51 IN	842.1	0.6	0.81
WW TC ON ROD 12,51 IN	843.4	0.2	0.90
WW TC ON ROD 16,51 IN	839.3	0.2	0.60
WW TC ON ROD 18,51 IN	843.7	0.4	0.93
WW TC ON ROD 03,63 IN	845.0	0.0	1.02
WW TC ON ROD 06,63 IN	838.5	0.3	0.54
WW TC ON ROD 10,63 IN	850.7	0.3	1.44
DUCT THERMOCOUPLES			
DUCT WALL TC,CH 38,19 IN(DEG F)	833.2	0.7	0.15
DUCT WALL TC,CH 53,19 IN	834.1	0.3	0.23
DUCT WALL TC,CH 28,21 IN	859.9	0.2	2.12
DUCT WALL TC,CH 43,21 IN	831.7	0.6	0.05
DUCT WALL TC,CH 44,21 IN	833.7	0.4	0.20
TEST SECTION HOUSING THERMOCOUPLES			
TS SHELL-BOT(DEG F)	831.9	0.4	
TS GUARD HTR-BOT	802.3	0.6	
TS HTR-BOT	751.2	0.7	
TS SHELL-LOW CTR	847.4	0.3	
TS GUARD HTR-LOW CTR	846.9	0.9	
TS HTR-LOW CTR	771.4	0.5	
TS SHELL-UP CTR	852.2	0.4	
TS GUARD HTR-UP CTR	865.2	0.7	
TS HTR-UP CTR	841.6	1.0	
TS SHELL-TOP	843.8	0.9	
TS GUARD HTR-TOP	853.3	1.6	
TS HTR-TOP	858.3	1.1	
REFERENCE BOX THERMOCOUPLES			
150 DEG REF BOX 1(DEG F)	147.8	1.0	
150 DEG REF BOX 2	149.3	0.8	
150 DEG REF BOX 3	151.7	0.8	
150 DEG REF BOX 4	149.6	0.5	
150 DEG REF BOX 5	146.5	0.4	
MISCELLANEOUS			
SOD PUMP SPEED(RPM)	486.3	2.7	
EXPANSION TANK LEVEL(% FULL)	75.3	0.2	

TEST SERIES 10(BUNDLE 3C); TEST 10 RUN 125 01/13/78 9 27 1

CONDITIONS:
TEST SECTION FLOW: 0.62 L/S (9.8 GPM)
TEST SECTION POWER
(1 ROD HEATED): 5.2 KW (9.7 KW/M/ROD)(3.0 KW/FT/ROD)

TEST SECTION INLET TEMPERATURE: 432 DEG C (810 DEG F)
TEST SECTION OUTLET TEMPERATURE: 439 DEG C (823 DEG F)

HEAT BALANCE:

HEAT INPUT FROM 31 FUEL PIN SIMULATORS: 5.2 KW
HEAT ABSORBED BY SODIUM=
FLOW X SP.HEAT X (TS OUT TEMP - TS IN TEMP) 5.0 KW
% OF INPUT HEAT ACCOUNTED FOR: 96.1 %

INSTRUMENT	20-SEC AVG	STD DEV
HEATER POWERS(KW)		
HTR POWER IN ROD 25	5.2	0.0
HTR POWER IN RODS 8,9,10	0.1	0.0
HTR POWER IN RODS 14,15,16	0.1	0.0
HTR POWER IN RODS 1,3,11,19	0.1	0.0
HTR POWER IN RODS 5,6,13,17	0.1	0.0
HTR POWER IN RODS 4,7,12,18	0.0	0.0
HTR POWER IN RODS 30,31	-0.0	0.0
HTR POWER IN RODS 2,24,27,28	-0.3	0.0
HTR POWER IN RODS 33,34	0.0	0.0
HTR POWER IN RODS 21,22,36,37	0.0	0.0
FLOWS		
TEST SECTION(TS) FLOW IN(GPM)	9.8	0.1
TS FLOW OUT(GPM)	9.9	0.1
TS BYPASS FLOW(GPM)	1.7	0.1
LOOP FLOW TOTAL(GPM)	10.1	0.2
RADIATOR AIR FLOW(CFM)	1.2	0.0
PRESSURES		
TS IN PRESS(PSIG)	13.1	0.1
TS OUT PRESS(PSIG)	6.0	0.1
PUMP OUT PRESS(PSIG)	8.3	0.0
TS LINE PRESS IN(PSIG)	11.9	0.1
EXP TANK ARGON PRESS(PSIG)	2.5	0.1
TS BYP LINE PRESS IN(PSIG)	13.3	0.1
TS BYP LINE PRESS OUT(PSIG)	9.6	0.1

Test 10, run 125 (continued)

INSTRUMENT	20-SEC AVG	STD DEV	NORMALIZED TEMP
LOOP THERMOCOUPLES			
TEST SECT INLET WELL(DEG F)	810.3	0.4	
TEST SECT OUTLET WELL(DEG F)	823.6	0.4	
PUMP IN PIPE WALL TC	817.6	5.2	
PUMP OUT PIPE WALL TC	794.9	1.0	
RAD IN PIPE WALL TC	819.2	0.5	
RAD OUT PIPE WALL TC	796.1	0.5	
HEATER INTERNAL THERMOCOUPLES			
HTR TC IN HTR 08,12AB IN(DEG F)	813.9	0.4	0.27
HTR TC IN HTR 13,12AB IN	811.3	0.4	0.07
HTR TC IN HTR 18,12AB IN	809.3	0.3	-.07
HTR TC IN HTR 22,12AB IN	810.9	3.9	0.05
HTR TC IN HTR 08,12BC IN	814.3	0.4	0.30
HTR TC IN HTR 13,12BC IN	810.9	0.6	0.05
HTR TC IN HTR 18,12BC IN	809.2	0.5	-.08
HTR TC IN HTR 22,12BC IN	814.7	1.2	0.33
HTR TC IN HTR 09,15AB IN	819.1	1.3	0.66
HTR TC IN HTR 10,15BC IN	816.8	0.6	0.49
HTR TC IN HTR 16,15BC IN	809.5	1.1	-.06
HTR TC IN HTR 25,15BC IN	895.5	0.7	6.40
HTR TC IN HTR 02,15.1 IN	813.8	0.4	0.26
HTR TC IN HTR 03,15.1 IN	813.5	0.9	0.25
HTR TC IN HTR 06,15.1 IN	811.5	1.2	0.09
HTR TC IN HTR 15,15.1 IN	809.2	0.4	-.08
HTR TC IN HTR 24,15.1 IN	78.2	0.2	****
HTR TC IN HTR 33,15.1 IN	810.2	0.2	-.01
HTR TC IN HTR 36,15.1 IN	808.7	0.4	-.12
HTR TC IN HTR 02,15.4 IN	816.5	2.9	0.47
HTR TC IN HTR 03,15.4 IN	817.4	2.3	0.54
HTR TC IN HTR 06,15.4 IN	813.6	1.4	0.25
HTR TC IN HTR 15,15.4 IN	808.4	0.5	-.14
HTR TC IN HTR 24,15.4 IN	426.7	1.3	****
HTR TC IN HTR 33,15.4 IN	810.0	0.5	-.02
HTR TC IN HTR 34,15.4 IN	805.3	25.8	-.37
HTR TC IN HTR 36,15.4 IN	808.5	0.4	-.14
HTR TC IN HTR 02,15.6 IN	814.3	0.4	0.30
HTR TC IN HTR 03,15.6 IN	815.0	1.3	0.35
HTR TC IN HTR 06,15.6 IN	813.8	0.6	0.26
HTR TC IN HTR 15,15.6 IN	808.9	0.6	-.10
HTR TC IN HTR 24,15.6 IN	845.4	1.1	2.64
HTR TC IN HTR 33,15.6 IN	809.7	0.7	-.05
HTR TC IN HTR 34,15.6 IN	801.1	21.8	-.69
HTR TC IN HTR 36,15.6 IN	808.2	0.4	-.16
HTR TC IN HTR 03,15.9 IN	812.8	0.6	0.19
HTR TC IN HTR 06,15.9 IN	812.8	0.3	0.19
HTR TC IN HTR 15,15.9 IN	808.6	0.6	-.13
HTR TC IN HTR 24,15.9 IN	843.4	1.9	2.49
HTR TC IN HTR 33,15.9 IN	808.0	0.4	-.17
HTR TC IN HTR 34,15.9 IN	805.5	4.7	-.36

Test 10, run 125 (continued)

INSTRUMENT	20-SEC AVG	STD DEV	NORMALIZED TEMP
HTR TC IN HTR 36,15.9 IN	807.8	1.6	-.19
HTR TC IN HTR 04,16.1 IN	813.7	0.7	0.26
HTR TC IN HTR 05,16.1 IN	814.6	0.4	0.33
HTR TC IN HTR 07,16.1 IN	812.8	0.2	0.19
HTR TC IN HTR 21,16.1 IN	823.5	0.5	0.99
HTR TC IN HTR 27,16.1 IN	813.5	1.3	0.24
HTR TC IN HTR 04,16.4 IN	814.6	0.8	0.32
HTR TC IN HTR 05,16.4 IN	813.3	0.6	0.23
HTR TC IN HTR 07,16.4 IN	812.2	0.6	0.14
HTR TC IN HTR 21,16.4 IN	823.9	0.7	1.03
HTR TC IN HTR 27,16.4 IN	813.9	1.8	0.27
HTR TC IN HTR 04,16.6 IN	816.1	0.5	0.44
HTR TC IN HTR 05,16.6 IN	813.4	0.4	0.24
HTR TC IN HTR 07,16.6 IN	814.4	0.4	0.31
HTR TC IN HTR 21,16.6 IN	815.3	1.1	0.38
HTR TC IN HTR 27,16.6 IN	812.9	1.3	0.19
HTR TC IN HTR 04,16.9 IN	815.1	0.5	0.36
HTR TC IN HTR 07,16.9 IN	814.3	0.2	0.30
HTR TC IN HTR 21,16.9 IN	812.9	2.5	0.20
HTR TC IN HTR 27,16.9 IN	812.5	1.5	0.17
HTR TC IN HTR 11,18AB IN	820.8	0.4	0.79
HTR TC IN HTR 12,18AB IN	818.2	0.6	0.59
HTR TC IN HTR 14,18AB IN	815.3	1.4	0.38
HTR TC IN HTR 30,18AB IN	815.8	7.2	0.42
HTR TC IN HTR 11,18BC IN	821.1	0.3	0.81
HTR TC IN HTR 12,18BC IN	817.1	0.9	0.51
HTR TC IN HTR 14,18BC IN	820.4	3.5	0.76
HTR TC IN HTR 17,18BC IN	808.8	0.4	-.11
HTR TC IN HTR 30,18BC IN	814.4	7.1	0.31
WIRE WRAP THERMOCOUPLES			
WW TC ON HTR 12,-1 IN(DEG F)	809.4	1.9	-.06
WW TC ON HTR 16,-1 IN	811.1	0.4	0.06
WW TC ON HTR 12,01 IN	812.0	0.8	0.13
WW TC ON HTR 16,09 IN	813.8	0.6	0.27
WW TC ON HTR 04,11 IN	815.6	0.5	0.40
WW TC ON HTR 05,11 IN	812.5	0.4	0.16
WW TC ON HTR 13,11 IN	812.3	1.0	0.15
WW TC ON HTR 17,11 IN	812.6	0.2	0.18
WW TC ON HTR 28,11 IN	814.5	0.4	0.32
WW TC ON HTR 31,11 IN	811.5	0.5	0.09
WW TC ON HTR 03,13 IN	810.2	0.8	-.01
WW TC ON HTR 13,13 IN	812.9	0.8	0.19
WW TC ON HTR 15,13 IN	811.2	0.4	0.07
WW TC ON HTR 17,13 IN	812.4	0.4	0.16
WW TC ON HTR 22,13 IN	821.1	0.4	0.81
WW TC ON HTR 01,15 IN	815.2	0.5	0.37
WW TC ON HTR 03,15 IN	814.5	0.4	0.32
WW TC ON HTR 08,15 IN	810.7	0.7	0.03
WW TC ON HTR 10,15 IN	823.8	0.4	1.02
WW TC ON HTR 15,15 IN	812.2	0.4	0.15

Test 10, run 125 (continued)

INSTRUMENT	20-SEC AVG	STD DEV	NORMALIZED TEMP
WW TC ON HTR 19,15 IN	815.5	0.4	0.39
WW TC ON HTR 25,15 IN	852.4	0.4	3.16
WW TC ON HTR 36,15 IN	812.0	0.7	0.13
WW TC ON HTR 01,17 IN	815.3	0.4	0.37
WW TC AJ HTR 02,17 IN	815.5	0.5	0.39
WW TC OP HTR 02,17 IN	814.0	0.5	0.28
WW TC ON HTR 08,17 IN	815.1	0.2	0.36
WW TC ON HTR 10,17 IN	838.8	0.4	2.14
WW TC ON HTR 11,17 IN	860.8	1.4	3.79
WW TC ON HTR 18,17 IN	814.6	0.4	0.33
WW TC ON HTR 19,17 IN	816.5	0.4	0.47
WW TC ON HTR 21,17 IN	824.7	0.5	1.08
WW TC ON HTR 22,17 IN	838.7	0.5	2.13
WW TC ON HTR 33,17 IN	812.7	0.6	0.19
WW TC ON HTR 37,17 IN	816.0	0.8	0.43
WW TC ON HTR 06,19 IN	812.8	0.4	0.19
WW TC AJ HTR 07,19 IN	814.7	0.5	0.33
WW TC OP HTR 07,19 IN	813.8	0.5	0.27
WW TC ON HTR 09,19 IN	821.9	0.4	0.87
WW TC ON HTR 14,19 IN	812.9	0.4	0.19
WW TC ON HTR 18,19 IN	815.1	0.4	0.36
WW TC ON HTR 27,19 IN	820.7	0.4	0.78
WW TC ON HTR 30,19 IN	812.4	0.4	0.16
WW TC ON HTR 34,19 IN	807.3	0.7	-.22
WW TC ON HTR 36,19 IN	813.8	0.7	0.26
WW TC ON HTR 37,19 IN	826.7	0.7	1.23
WW TC ON HTR 05,21 IN	814.8	0.4	0.34
WW TC ON HTR 06,21 IN	812.6	0.3	0.17
WW TC ON HTR 21,21 IN	840.8	0.3	2.29
WW TC ON HTR 24,21 IN	866.9	0.4	4.25
WW TC ON HTR 25,21 IN	888.9	0.4	5.90
WW TC ON HTR 27,21 IN	822.5	0.3	0.92
WW TC ON HTR 30,21 IN	812.0	0.4	0.13
WW TC ON HTR 33,21 IN	810.6	0.8	0.03
WW TC ON HTR 34,21 IN	809.6	0.7	-.05
WW TC ON HTR 04,23 IN	821.5	0.4	0.84
WW TC ON HTR 09,23 IN	826.4	0.7	1.21
WW TC ON HTR 14,23 IN	813.2	0.5	0.22
WW TC ON HTR 24,23 IN	861.4	0.3	3.84
WW TC ON HTR 28,23 IN	814.1	0.7	0.29
WW TC ON HTR 31,23 IN	814.0	0.6	0.28
WW TC ON ROD 01,25 IN	811.3	0.4	0.08
WW TC ON ROD 02,25 IN	812.7	0.1	0.18
WW TC ON ROD 05,25 IN	816.7	0.3	0.48
WW TC ON ROD 08,25 IN	824.0	0.4	1.03
WW TC ON ROD 14,25 IN	814.3	0.2	0.30
WW TC ON ROD 04,27 IN	816.5	0.4	0.47
WW TC ON ROD 07,27 IN	813.9	0.9	0.27
WW TC ON ROD 12,27 IN	821.3	0.6	0.83
WW TC ON ROD 16,27 IN	815.4	0.4	0.39
WW TC ON ROD 18,27 IN	815.2	0.1	0.37
WW TC ON ROD 03,29 IN	833.9	0.4	1.77

Test 10, run 125 (continued)

INSTRUMENT	20-SEC AVG	STD DEV	NORMALIZED TEMP
WW TC ON ROD 06.29 IN	812.7	0.1	0.18
WW TC ON ROD 10.29 IN	854.5	0.8	3.32
WW TC ON ROD 01.37 IN	814.4	0.1	0.31
WW TC ON ROD 02.37 IN	818.5	0.1	0.62
WW TC ON ROD 08.37 IN	826.1	0.3	1.19
WW TC ON ROD 14.37 IN	816.0	0.1	0.43
WW TC ON ROD 04.51 IN	820.1	0.2	0.74
WW TC ON ROD 07.51 IN	818.6	0.4	0.62
WW TC ON ROD 12.51 IN	823.5	0.2	0.99
WW TC ON ROD 16.51 IN	817.7	0.1	0.56
WW TC ON ROD 18.51 IN	819.9	0.4	0.73
WW TC ON ROD 03.63 IN	825.1	0.1	1.12
WW TC ON ROD 06.63 IN	817.2	0.4	0.52
WW TC ON ROD 10.63 IN	830.2	0.3	1.50
DUCT THERMOCOUPLES			
DUCT WALL TC,CH 38.19 IN(DEG F)	826.1	0.4	1.19
DUCT WALL TC,CH 53.19 IN	811.1	0.1	0.06
DUCT WALL TC,CH 28.21 IN	828.7	0.4	1.38
DUCT WALL TC,CH 43.21 IN	811.3	0.6	0.08
DUCT WALL TC,CH 44.21 IN	812.9	0.4	0.19
TEST SECTION HOUSING THERMOCOUPLES			
TS SHELL-BOT(DEG F)	811.0	0.3	
TS GUARD HTR-BOT	789.5	0.2	
TS HTR-BOT	744.0	0.4	
TS SHELL-LOW CTR	823.3	0.5	
TS GUARD HTR-LOW CTR	831.2	0.7	
TS HTR-LOW CTR	762.3	0.5	
TS SHELL-UP CTR	831.3	0.5	
TS GUARD HTR-UP CTR	852.6	0.5	
TS HTR-UP CTR	832.4	0.8	
TS SHELL-TOP	823.0	0.9	
TS GUARD HTR-TOP	838.2	1.3	
TS HTR-TOP	850.0	1.1	
REFERENCE BOX THERMOCOUPLES			
150 DEG REF BOX 1(DEG F)	148.0	0.8	
150 DEG REF BOX 2	148.2	0.7	
150 DEG REF BOX 3	151.5	0.6	
150 DEG REF BOX 4	149.5	0.3	
150 DEG REF BOX 5	148.1	0.4	
MISCELLANEOUS			
SOD PUMP SPEED(RPM)	501.4	5.8	
EXPANSION TANK LEVEL(% FULL)	76.0	0.1	

TEST SERIES 10(BUNDLE 3C); TEST 10 RUN 127 01/18/78 11 26 32

CONDITIONS:

TEST SECTION FLOW: 0.62 L/S (9.7 GPM)

TEST SECTION POWER
(1 ROD HEATED): 5.1 KW (9.5 KW/M/ROD)(2.9 KW/FT/ROD)

TEST SECTION INLET TEMPERATURE: 443 DEG C (829 DEG F)

TEST SECTION OUTLET TEMPERATURE: 450 DEG C (843 DEG F)

HEAT BALANCE:

HEAT INPUT FROM 31 FUEL PIN SIMULATORS: 5.1 KW

HEAT ABSORBED BY SODIUM=
FLOW X SP.HEAT X (TS OUT TEMP - TS IN TEMP) 5.0 KW

% OF INPUT HEAT ACCOUNTED FOR: 98.2 %

INSTRUMENT	20-SEC AVG	STD DEV
HEATER POWERS(KW)		
HTR POWER IN ROD 27	5.1	0.0
HTR POWER IN RODS 8,9,10	0.1	0.0
HTR POWER IN RODS 14,15,16	0.0	0.0
HTR POWER IN RODS 1,3,11,19	0.0	0.0
HTR POWER IN RODS 5,6,13,17	0.1	0.0
HTR POWER IN RODS 4,7,12,18	0.0	0.0
HTR POWER IN RODS 30,31	-0.0	0.0
HTR POWER IN RODS 2,24,25,28	-0.3	0.0
HTR POWER IN RODS 33,34	0.0	0.0
HTR POWER IN RODS 21,22,36,37	0.0	0.0
FLOWS		
TEST SECTION(TS) FLOW IN(GPM)	9.7	0.1
TS FLOW OUT(GPM)	9.9	0.1
TS BYPASS FLOW(GPM)	0.3	0.1
LOOP FLOW TOTAL(GPM)	9.9	0.2
RADIATOR AIR FLOW(CFM)	1.1	0.0
PRESSURES		
TS IN PRESS(PSIG)	12.7	0.1
TS OUT PRESS(PSIG)	5.9	0.0
PUMP OUT PRESS(PSIG)	7.9	0.1
TS LINE PRESS IN(PSIG)	11.7	0.1
EXP TANK ARGON PRESS(PSIG)	2.4	0.1
TS BYP LINE PRESS IN(PSIG)	12.8	0.1
TS BYP LINE PRESS OUT(PSIG)	9.4	0.1

Test 10, run 127 (continued)

INSTRUMENT	20-SEC AVG	STD DEV	NORMALIZED TEMP
LOOP THERMOCOUPLES			
TEST SECT INLET WELL(DEG F)	830.0	0.4	
TEST SECT OUTLET WELL(DEG F)	843.5	0.4	
PUMP IN PIPE WALL TC	836.9	4.3	
PUMP OUT PIPE WALL TC	813.6	1.1	
RAD IN PIPE WALL TC	839.2	0.2	
RAD OUT PIPE WALL TC	814.5	0.6	
HEATER INTERNAL THERMOCOUPLES			
HTR TC IN HTR C8,12AB IN(DEG F)	833.0	0.6	0.23
HTR TC IN HTR 13,12AB IN	859.8	0.8	2.20
HTR TC IN HTR 18,12AB IN	828.6	0.4	-.10
HTR TC IN HTR 22,12AB IN	808.5	7.8	****
HTR TC IN HTR C8,12BC IN	833.0	0.5	0.22
HTR TC IN HTR 13,12BC IN	860.3	0.7	2.24
HTR TC IN HTR 18,12BC IN	828.9	0.5	-.08
HTR TC IN HTR 22,12BC IN	829.4	0.8	-.04
HTR TC IN HTR 09,15AB IN	817.0	8.6	-.96
HTR TC IN HTR 10,15BC IN	829.7	0.6	-.02
HTR TC IN HTR 16,15BC IN	828.2	1.2	-.14
HTR TC IN HTR 25,15BC IN	855.9	0.9	1.91
HTR TC IN HTR 02,15.1 IN	832.7	0.5	0.20
HTR TC IN HTR 03,15.1 IN	832.5	1.0	0.18
HTR TC IN HTR C6,15.1 IN	831.6	1.4	0.12
HTR TC IN HTR 15,15.1 IN	830.5	0.7	0.04
HTR TC IN HTR 24,15.1 IN	841.4	0.8	0.84
HTR TC IN HTR 33,15.1 IN	830.3	0.5	0.02
HTR TC IN HTR 36,15.1 IN	828.4	1.4	-.12
HTR TC IN HTR C2,15.4 IN	836.1	2.9	0.45
HTR TC IN HTR 03,15.4 IN	835.4	2.0	0.40
HTR TC IN HTR C6,15.4 IN	833.0	1.4	0.22
HTR TC IN HTR 15,15.4 IN	828.3	0.9	-.12
HTR TC IN HTR 24,15.4 IN	840.8	1.1	0.80
HTR TC IN HTR 33,15.4 IN	829.9	0.7	-.01
HTR TC IN HTR 34,15.4 IN	851.3	88.0	1.57
HTR TC IN HTR 36,15.4 IN	827.9	0.4	-.16
HTR TC IN HTR 02,15.6 IN	833.4	0.3	0.25
HTR TC IN HTR 03,15.6 IN	833.9	1.2	0.29
HTR TC IN HTR 06,15.6 IN	833.3	0.8	0.24
HTR TC IN HTR 15,15.6 IN	830.2	1.3	0.01
HTR TC IN HTR 24,15.6 IN	840.3	0.8	0.76
HTR TC IN HTR 33,15.6 IN	829.7	0.6	-.02
HTR TC IN HTR 34,15.6 IN	782.6	26.0	****
HTR TC IN HTR 36,15.6 IN	827.5	0.3	-.19
HTR TC IN HTR C3,15.9 IN	833.4	1.4	0.25
HTR TC IN HTR C6,15.9 IN	831.9	0.3	0.14
HTR TC IN HTR 15,15.9 IN	829.2	0.8	-.06
HTR TC IN HTR 24,15.9 IN	840.0	1.0	0.74
HTR TC IN HTR 33,15.9 IN	827.5	0.4	-.18
HTR TC IN HTR 34,15.9 IN	822.7	27.0	-.54

Test 10, run 127 (continued)

INSTRUMENT	20-SEC AVG	STD DEV	NORMALIZED TEMP
HTR TC IN HTR 36,15.9 IN	825.9	2.9	-.30
HTR TC IN HTR 04,16.1 IN	837.0	0.4	0.52
HTR TC IN HTR 05,16.1 IN	838.7	0.5	0.64
HTR TC IN HTR C7,16.1 IN	832.0	0.4	0.15
HTR TC IN HTR 21,16.1 IN	831.0	0.3	0.07
HTR TC IN HTR 27,16.1 IN	920.3	1.1	6.67
HTR TC IN HTR 04,16.4 IN	837.9	0.4	0.58
HTR TC IN HTR 05,16.4 IN	836.8	0.6	0.50
HTR TC IN HTR C7,16.4 IN	831.7	0.3	0.13
HTR TC IN HTR 21,16.4 IN	832.0	0.4	0.15
HTR TC IN HTR 27,16.4 IN	920.0	0.6	6.64
HTR TC IN HTR C4,16.6 IN	840.0	0.4	0.74
HTR TC IN HTR 05,16.6 IN	835.9	0.4	0.43
HTR TC IN HTR C7,16.6 IN	833.7	0.4	0.27
HTR TC IN HTR 21,16.6 IN	828.8	0.7	-.09
HTR TC IN HTR 27,16.6 IN	918.9	0.7	6.56
HTR TC IN HTR 04,16.9 IN	840.0	0.4	0.74
HTR TC IN HTR C7,16.9 IN	833.9	0.5	0.29
HTR TC IN HTR 21,16.9 IN	827.6	1.2	-.18
HTR TC IN HTR 27,16.9 IN	916.9	0.6	6.41
HTR TC IN HTR 11,18AB IN	836.2	0.8	0.46
HTR TC IN HTR 12,18AB IN	862.6	0.8	2.41
HTR TC IN HTR 14,18AB IN	845.9	9.8	1.17
HTR TC IN HTR 30,18AB IN	829.4	7.1	-.04
HTR TC IN HTR 11,18BC IN	837.7	0.7	0.57
HTR TC IN HTR 12,18BC IN	865.0	0.4	2.58
HTR TC IN HTR 14,18BC IN	860.7	16.0	2.27
HTR TC IN HTR 17,18BC IN	828.3	0.3	-.12
HTR TC IN HTR 30,18BC IN	827.0	7.2	-.22
WIRE WRAP THERMCCOUPLES			
WW TC ON HTR 12,-1 IN(DEG F)	832.0	4.3	0.15
WW TC ON HTR 16,-1 IN	831.0	0.6	0.08
WW TC ON HTR 12,01 IN	832.6	12.5	0.19
WW TC ON HTR 16,09 IN	833.3	0.5	0.25
WW TC ON HTR C4,11 IN	835.2	0.7	0.38
WW TC ON HTR 05,11 IN	832.9	0.5	0.21
WW TC ON HTR 13,11 IN	842.5	1.5	0.93
WW TC ON HTR 17,11 IN	831.8	0.2	0.13
WW TC ON HTR 28,11 IN	842.2	0.5	0.90
WW TC ON HTR 31,11 IN	831.0	0.4	0.07
WW TC ON HTR C3,13 IN	829.2	0.8	-.06
WW TC ON HTR 13,13 IN	841.7	2.4	0.86
WW TC ON HTR 15,13 IN	831.0	0.4	0.07
WW TC ON HTR 17,13 IN	831.7	0.2	0.13
WW TC ON HTR 22,13 IN	834.5	0.4	0.33
WW TC ON HTR 01,15 IN	839.5	0.5	0.70
WW TC ON HTR 03,15 IN	834.2	0.4	0.31
WW TC ON HTR 08,15 IN	829.8	1.3	-.01
WW TC ON HTR 10,15 IN	834.9	0.4	0.36

Test 10, run 127 (continued)

INSTRUMENT	20-SEC AVG	STD DEV	NORMALIZED TEMP
WW TC ON HTR 15,15 IN	831.7	0.3	0.12
WW TC ON HTR 19,15 IN	834.7	0.4	0.35
WW TC ON HTR 25,15 IN	871.1	0.5	3.04
WW TC ON HTR 36,15 IN	831.5	0.9	0.11
WW TC ON HTR 01,17 IN	839.3	0.4	0.69
WW TC AJ HTR 02,17 IN	833.9	0.5	0.29
WW TC OP HTR 02,17 IN	833.5	0.4	0.26
WW TC ON HTR 08,17 IN	831.7	0.2	0.13
WW TC ON HTR 10,17 IN	840.7	0.6	0.79
WW TC ON HTR 11,17 IN	856.1	0.5	1.93
WW TC ON HTR 18,17 IN	834.1	0.4	0.31
WW TC ON HTR 19,17 IN	834.9	0.4	0.36
WW TC ON HTR 21,17 IN	836.1	0.4	0.45
WW TC ON HTR 22,17 IN	843.3	0.5	0.98
WW TC ON HTR 33,17 IN	831.8	0.5	0.13
WW TC ON HTR 37,17 IN	831.8	1.4	0.13
WW TC ON HTR 06,19 IN	833.8	0.5	0.28
WW TC AJ HTR 07,19 IN	833.6	0.5	0.27
WW TC OP HTR 07,19 IN	832.9	0.4	0.22
WW TC ON HTR 09,19 IN	834.9	0.4	0.36
WW TC ON HTR 14,19 IN	842.7	0.5	0.94
WW TC ON HTR 18,19 IN	834.6	0.4	0.34
WW TC ON HTR 27,19 IN	900.4	0.2	5.20
WW TC ON HTR 30,19 IN	832.0	0.4	0.15
WW TC ON HTR 34,19 IN	827.2	0.8	-.21
WW TC ON HTR 36,19 IN	832.0	0.7	0.15
WW TC ON HTR 37,19 IN	834.2	0.8	0.31
WW TC ON HTR 05,21 IN	841.6	0.2	0.86
WW TC ON HTR 06,21 IN	833.4	0.4	0.25
WW TC ON HTR 21,21 IN	845.1	0.3	1.12
WW TC ON HTR 24,21 IN	864.3	0.4	2.53
WW TC ON HTR 25,21 IN	867.4	0.8	2.76
WW TC ON HTR 27,21 IN	916.6	0.5	6.39
WW TC ON HTR 30,21 IN	831.8	0.3	0.14
WW TC ON HTR 33,21 IN	830.5	1.2	0.04
WW TC ON HTR 34,21 IN	828.3	1.1	-.13
WW TC ON HTR 04,23 IN	844.8	1.0	1.09
WW TC ON HTR 09,23 IN	837.3	0.8	0.54
WW TC ON HTR 14,23 IN	835.8	0.5	0.43
WW TC ON HTR 24,23 IN	860.3	0.5	2.24
WW TC ON HTR 28,23 IN	850.8	1.4	1.54
WW TC ON HTR 31,23 IN	832.6	0.8	0.19
WW TC ON ROD 01,25 IN	834.0	0.4	0.30
WW TC ON ROD 02,25 IN	831.1	0.3	0.08
WW TC ON ROD 05,25 IN	841.3	0.4	0.83
WW TC ON ROD 08,25 IN	835.2	0.3	0.39
WW TC ON ROD 14,25 IN	836.7	0.1	0.50
WW TC ON ROD 04,27 IN	863.5	0.4	2.48
WW TC ON ROD 07,27 IN	835.8	1.4	0.43
WW TC ON ROD 12,27 IN	869.2	0.5	2.90
WW TC ON ROD 16,27 IN	835.1	0.2	0.38
WW TC ON ROD 18,27 IN	833.5	0.3	0.26

Test 10, run 127 (continued)

INSTRUMENT	20-SEC AVG	STD DEV	NORMALIZED TEMP
WW TC ON ROD 03,29 IN	852.3	0.4	1.64
WW TC ON ROD 06,29 IN	836.8	0.2	0.50
WW TC ON ROD 10,29 IN	860.2	0.9	2.23
WW TC ON ROD 01,37 IN	835.1	0.1	0.38
WW TC ON ROD 02,37 IN	834.7	0.4	0.35
WW TC ON ROD 08,37 IN	838.4	0.1	0.62
WW TC ON ROD 14,37 IN	841.2	0.4	0.83
WW TC ON ROD 04,51 IN	848.3	0.2	1.35
WW TC ON ROD 07,51 IN	838.4	0.4	0.62
WW TC ON ROD 12,51 IN	853.3	0.1	1.72
WW TC ON ROD 16,51 IN	837.9	0.4	0.58
WW TC ON ROD 18,51 IN	837.6	0.1	0.56
WW TC ON ROD 03,63 IN	846.9	0.4	1.25
WW TC ON ROD 06,63 IN	838.3	0.3	0.61
WW TC ON ROD 10,63 IN	852.5	0.1	1.66
DUCT THERMOCOUPLES			
DUCT WALL TC,CH 38,19 IN(DEG F)	880.9	0.7	3.76
DUCT WALL TC,CH 53,19 IN	830.0	0.3	0.00
DUCT WALL TC,CH 28,21 IN	835.1	0.1	0.37
DUCT WALL TC,CH 43,21 IN	832.1	0.7	0.15
DUCT WALL TC,CH 44,21 IN	833.1	0.5	0.23
TEST SECTION HOUSING THERMOCOUPLES			
TS SHELL-BOT(DEG F)	831.4	0.5	
TS GUARD HTR-BOT	802.4	0.4	
TS HTR-BOT	751.5	0.5	
TS SHELL-LOW CTR	847.5	0.4	
TS GUARD HTR-LOW CTR	846.7	0.9	
TS HTR-LOW CTR	772.3	0.7	
TS SHELL-UP CTR	849.4	0.5	
TS GUARD HTR-UP CTR	866.3	0.8	
TS HTR-UP CTR	843.0	0.9	
TS SHELL-TOP	845.4	0.9	
TS GUARD HTR-TOP	855.2	1.4	
TS HTR-TOP	859.6	1.3	
REFERENCE BOX THERMOCOUPLES			
150 DEG REF BOX 1(DEG F)	148.0	1.1	
150 DEG REF BOX 2	148.1	0.6	
150 DEG REF BOX 3	151.6	0.8	
150 DEG REF BOX 4	149.6	0.4	
150 DEG REF BOX 5	147.1	0.3	
MISCELLANEOUS			
SOD PUMP SPEED(RPM)	487.3	6.0	
EXPANSION TANK LEVEL(% FULL)	75.6	0.2	

TEST SERIES 10(BUNDLE 3C); TEST 10 RUN 128 01/18/78 12 0 54

CONDITIONS:

TEST SECTION FLOW: 0.62 L/S (9.8 GPM)

TEST SECTION POWER
(1 ROD HEATED): 5.1 KW (9.5 KW/M/ROD)(2.9 KW/FT/ROD)

TEST SECTION INLET TEMPERATURE: 442 DEG C (829 DEG F)

TEST SECTION OUTLET TEMPERATURE: 450 DEG C (842 DEG F)

HEAT BALANCE:

HEAT INPUT FROM 31 FUEL PIN SIMULATORS: 5.1 KW

HEAT ABSORBED BY SODIUM=
FLOW X SP.HEAT X (TS OUT TEMP - TS IN TEMP) 5.1 KW

% OF INPUT HEAT ACCOUNTED FOR: 99.3 %

INSTRUMENT	20-SEC AVG	STD DEV
HEATER POWERS(KW)		
HTR POWER IN ROD 28	5.1	0.0
HTR POWER IN RODS 8,9,10	0.1	0.0
HTR POWER IN RODS 14,15,16	0.1	0.0
HTR POWER IN RODS 1,3,11,19	0.0	0.0
HTR POWER IN RODS 5,6,13,17	0.1	0.0
HTR POWER IN RODS 4,7,12,18	0.0	0.0
HTR POWER IN RODS 30,31	-0.0	0.0
HTR POWER IN RODS 2,24,25,27	-0.3	0.0
HTR POWER IN RODS 33,34	-0.0	0.0
HTR POWER IN RODS 21,22,36,37	0.0	0.0
FLOWS		
TEST SECTION(TS) FLOW IN(GPM)	9.8	0.1
TS FLOW OUT(GPM)	9.8	0.1
TS BYPASS FLOW(GPM)	0.8	0.1
LOOP FLOW TOTAL(GPM)	9.9	0.2
RADIATOR AIR FLOW(CFM)	1.1	0.0
PRESSURES		
TS IN PRESS(PSIG)	12.7	0.1
TS OUT PRESS(PSIG)	5.9	0.0
PUMP OUT PRESS(PSIG)	7.9	0.1
TS LINE PRESS IN(PSIG)	11.6	0.1
EXP TANK ARGON PRESS(PSIG)	2.4	0.1
TS BYP LINE PRESS IN(PSIG)	12.8	0.1
TS BYP LINE PRESS OUT(PSIG)	9.4	0.1

Test 10, run 128 (continued)

INSTRUMENT	20-SEC AVG	STD DEV	NORMALIZED TEMP
LOOP THERMOCOUPLES			
TEST SECT INLET WELL(DEG F)	829.3	0.4	
TEST SECT OUTLET WELL(DEG F)	843.0	0.5	
PUMP IN PIPE WALL TC	835.5	5.6	
PUMP OUT PIPE WALL TC	813.1	1.2	
RAD IN PIPE WALL TC	838.7	0.4	
RAD OUT PIPE WALL TC	813.6	0.5	
HEATER INTERNAL THERMOCOUPLES			
HTR TC IN HTR 08,12AB IN(DEG F)	831.1	0.5	0.13
HTR TC IN HTR 13,12AB IN	879.6	0.9	3.67
HTR TC IN HTR 18,12AB IN	827.5	0.3	-.13
HTR TC IN HTR 22,12AB IN	827.4	0.3	-.13
HTR TC IN HTR 08,12BC IN	831.3	0.5	0.15
HTR TC IN HTR 13,12BC IN	879.6	1.5	3.68
HTR TC IN HTR 18,12BC IN	827.9	0.4	-.10
HTR TC IN HTR 22,12BC IN	827.6	1.1	-.12
HTR TC IN HTR 09,15AB IN	818.3	8.5	-.80
HTR TC IN HTR 10,15BC IN	827.7	0.4	-.12
HTR TC IN HTR 16,15BC IN	828.1	0.6	-.09
HTR TC IN HTR 25,15BC IN	841.6	1.3	0.90
HTR TC IN HTR 02,15.1 IN	831.0	0.4	0.12
HTR TC IN HTR 03,15.1 IN	831.5	0.4	0.16
HTR TC IN HTR 06,15.1 IN	832.0	0.9	0.20
HTR TC IN HTR 15,15.1 IN	831.4	0.6	0.15
HTR TC IN HTR 24,15.1 IN	831.8	0.2	0.18
HTR TC IN HTR 33,15.1 IN	829.3	0.2	0.00
HTR TC IN HTR 36,15.1 IN	827.6	0.4	-.12
HTR TC IN HTR 02,15.4 IN	829.6	1.4	0.02
HTR TC IN HTR 03,15.4 IN	830.5	1.2	0.09
HTR TC IN HTR 06,15.4 IN	829.8	1.3	0.03
HTR TC IN HTR 15,15.4 IN	829.8	1.1	0.04
HTR TC IN HTR 24,15.4 IN	830.9	0.4	0.12
HTR TC IN HTR 33,15.4 IN	829.6	0.6	0.03
HTR TC IN HTR 34,15.4 IN	849.4	83.8	1.47
HTR TC IN HTR 36,15.4 IN	826.8	0.4	-.18
HTR TC IN HTR 02,15.6 IN	831.7	0.2	0.18
HTR TC IN HTR 03,15.6 IN	832.3	0.6	0.22
HTR TC IN HTR 06,15.6 IN	830.7	1.1	0.11
HTR TC IN HTR 15,15.6 IN	827.3	1.3	-.15
HTR TC IN HTR 24,15.6 IN	831.6	0.8	0.17
HTR TC IN HTR 33,15.6 IN	827.7	0.9	-.11
HTR TC IN HTR 34,15.6 IN	857.5	64.5	2.06
HTR TC IN HTR 36,15.6 IN	826.8	0.4	-.18
HTR TC IN HTR 03,15.9 IN	830.2	1.2	0.07
HTR TC IN HTR 06,15.9 IN	831.6	0.7	0.17
HTR TC IN HTR 15,15.9 IN	828.0	0.8	-.09
HTR TC IN HTR 24,15.9 IN	832.3	0.6	0.22
HTR TC IN HTR 33,15.9 IN	827.0	0.4	-.17
HTR TC IN HTR 34,15.9 IN	843.5	19.0	1.04

Test 10, run 128 (continued)

INSTRUMENT	20-SEC AVG	STD DEV	NORMALIZED TEMP
HTR TC IN HTR 36,15.9 IN	827.7	0.9	-.12
HTR TC IN HTR 04,16.1 IN	833.8	0.4	0.33
HTR TC IN HTR 05,16.1 IN	836.8	0.3	0.55
HTR TC IN HTR 07,16.1 IN	830.9	0.3	0.12
HTR TC IN HTR 21,16.1 IN	828.9	0.6	-.03
HTR TC IN HTR 27,16.1 IN	866.9	1.6	2.75
HTR TC IN HTR 04,16.4 IN	833.7	1.0	0.32
HTR TC IN HTR 05,16.4 IN	836.6	0.4	0.53
HTR TC IN HTR 07,16.4 IN	830.5	0.4	0.09
HTR TC IN HTR 21,16.4 IN	828.4	1.0	-.06
HTR TC IN HTR 27,16.4 IN	867.3	0.8	2.78
HTR TC IN HTR 04,16.6 IN	837.2	0.7	0.58
HTR TC IN HTR 05,16.6 IN	834.3	0.3	0.37
HTR TC IN HTR 07,16.6 IN	832.2	0.5	0.21
HTR TC IN HTR 21,16.6 IN	828.7	1.4	-.05
HTR TC IN HTR 27,16.6 IN	867.0	1.3	2.76
HTR TC IN HTR 04,16.9 IN	836.0	0.6	0.49
HTR TC IN HTR 07,16.9 IN	831.4	0.4	0.15
HTR TC IN HTR 21,16.9 IN	827.4	1.8	-.14
HTR TC IN HTR 27,16.9 IN	866.4	1.1	2.71
HTR TC IN HTR 11,18AB IN	832.0	0.5	0.19
HTR TC IN HTR 12,18AB IN	850.6	0.5	1.55
HTR TC IN HTR 14,18AB IN	854.1	9.8	1.81
HTR TC IN HTR 30,18AB IN	830.0	7.1	0.05
HTR TC IN HTR 11,18BC IN	832.0	0.5	0.20
HTR TC IN HTR 12,18BC IN	851.1	0.5	1.59
HTR TC IN HTR 14,18BC IN	813.6	20.3	****
HTR TC IN HTR 17,18BC IN	827.2	0.4	-.15
HTR TC IN HTR 30,18BC IN	826.6	7.1	-.20
WIRE WRAP THERMOCOUPLES			
WW TC ON HTR 12,-1 IN(DEG F)	831.4	3.4	0.15
WW TC ON HTR 16,-1 IN	830.6	0.5	0.10
WW TC ON HTR 12,01 IN	831.2	9.4	0.14
WW TC ON HTR 16,09 IN	831.5	0.4	0.16
WW TC ON HTR 04,11 IN	834.1	0.7	0.35
WW TC ON HTR 05,11 IN	831.7	0.2	0.18
WW TC ON HTR 13,11 IN	839.1	0.6	0.72
WW TC ON HTR 17,11 IN	830.4	0.4	0.08
WW TC ON HTR 28,11 IN	878.4	0.5	3.58
WW TC ON HTR 31,11 IN	830.0	0.5	0.05
WW TC ON HTR 03,13 IN	827.8	0.7	-.11
WW TC ON HTR 13,13 IN	853.8	0.5	1.79
WW TC ON HTR 15,13 IN	830.9	0.3	0.12
WW TC ON HTR 17,13 IN	830.4	0.5	0.08
WW TC ON HTR 22,13 IN	831.9	0.3	0.19
WW TC ON HTR 01,15 IN	838.6	0.4	0.68
WW TC ON HTR 03,15 IN	832.7	0.6	0.25
WW TC ON HTR 08,15 IN	828.8	1.2	-.04
WW TC ON HTR 10,15 IN	830.8	0.5	0.11

Test 10, run 128 (continued)

INSTRUMENT	20-SEC AVG	STD DEV	NORMALIZED TEMP
WW TC ON HTR 15,15 IN	831.8	0.2	0.18
WW TC ON HTR 19,15 IN	833.3	0.4	0.30
WW TC ON HTR 25,15 IN	862.1	0.9	2.39
WW TC ON HTR 36,15 IN	830.5	1.0	0.09
WW TC ON HTR 01,17 IN	837.2	0.5	0.58
WW TC AJ HTR 02,17 IN	832.8	0.6	0.26
WW TC OP HTR 02,17 IN	831.9	0.3	0.19
WW TC ON HTR 08,17 IN	831.0	0.3	0.13
WW TC ON HTR 10,17 IN	834.5	0.4	0.38
WW TC ON HTR 11,17 IN	845.0	0.2	1.15
WW TC ON HTR 18,17 IN	832.7	0.5	0.25
WW TC ON HTR 19,17 IN	832.9	0.5	0.26
WW TC ON HTR 21,17 IN	832.9	0.6	0.27
WW TC ON HTR 22,17 IN	836.0	0.4	0.49
WW TC ON HTR 33,17 IN	831.8	0.3	0.18
WW TC ON HTR 37,17 IN	830.2	1.2	0.07
WW TC ON HTR 06,19 IN	833.8	0.5	0.33
WW TC AJ HTR 07,19 IN	832.1	0.4	0.20
WW TC OP HTR 07,19 IN	831.8	0.0	0.18
WW TC ON HTR 09,19 IN	832.1	0.5	0.21
WW TC ON HTR 14,19 IN	881.5	1.4	3.81
WW TC ON HTR 18,19 IN	833.0	0.5	0.27
WW TC ON HTR 27,19 IN	880.1	0.4	3.71
WW TC ON HTR 30,19 IN	836.4	0.5	0.52
WW TC ON HTR 34,19 IN	826.3	0.9	-.22
WW TC ON HTR 36,19 IN	831.0	0.8	0.13
WW TC ON HTR 37,19 IN	830.8	0.7	0.11
WW TC ON HTR 05,21 IN	842.5	0.1	0.97
WW TC ON HTR 06,21 IN	832.5	0.6	0.24
WW TC ON HTR 21,21 IN	838.4	0.3	0.66
WW TC ON HTR 24,21 IN	855.1	0.4	1.88
WW TC ON HTR 25,21 IN	857.7	0.7	2.08
WW TC ON HTR 27,21 IN	878.9	0.4	3.63
WW TC ON HTR 30,21 IN	834.8	0.4	0.40
WW TC ON HTR 33,21 IN	830.3	1.4	0.08
WW TC ON HTR 34,21 IN	827.3	1.0	-.15
WW TC ON HTR 04,23 IN	839.3	0.6	0.73
WW TC ON HTR 09,23 IN	832.5	0.6	0.23
WW TC ON HTR 14,23 IN	846.0	1.2	1.22
WW TC ON HTR 24,23 IN	850.9	0.2	1.58
WW TC ON HTR 28,23 IN	880.7	0.5	3.75
WW TC ON HTR 31,23 IN	831.6	0.4	0.17
WW TC ON ROD 01,25 IN	834.2	0.2	0.36
WW TC ON ROD 02,25 IN	829.8	0.4	0.04
WW TC ON ROD 05,25 IN	845.8	0.4	1.21
WW TC ON ROD 08,25 IN	832.4	0.3	0.23
WW TC ON ROD 14,25 IN	839.7	0.4	0.76
WW TC ON ROD 04,27 IN	865.7	0.2	2.66
WW TC ON ROD 07,27 IN	834.8	1.4	0.40
WW TC ON ROD 12,27 IN	876.7	0.9	3.47
WW TC ON ROD 16,27 IN	835.1	0.2	0.43
WW TC ON ROD 18,27 IN	832.8	0.3	0.25

Test 10, run 128 (continued)

INSTRUMENT	20-SEC AVG	STD DEV	NORMALIZED TEMP
WW TC ON ROD C3,29 IN	844.9	0.3	1.14
WW TC ON ROD 06,29 IN	839.2	0.2	0.72
WW TC ON ROD 10,29 IN	851.7	1.3	1.64
WW TC ON ROD 01,37 IN	834.2	0.2	0.36
WW TC ON ROD C2,37 IN	831.8	0.2	0.18
WW TC ON ROD C8,37 IN	835.3	0.4	0.44
WW TC ON ROD 14,37 IN	845.6	0.6	1.19
WW TC ON ROD C4,51 IN	850.3	0.4	1.54
WW TC ON ROD 07,51 IN	837.3	0.6	0.59
WW TC ON ROD 12,51 IN	856.0	0.4	1.95
WW TC ON ROD 16,51 IN	837.6	0.4	0.61
WW TC ON ROD 18,51 IN	836.2	0.4	0.51
WW TC ON ROD C3,63 IN	845.0	0.0	1.15
WW TC ON ROD C6,63 IN	838.4	0.1	0.67
WW TC ON ROD 10,63 IN	849.9	0.5	1.50
DUCT THERMOCOUPLES			
DUCT WALL TC,CH 38,19 IN(DEG F)	864.6	0.7	2.58
DUCT WALL TC,CH 53,19 IN	829.1	0.4	-.02
DUCT WALL TC,CH 28,21 IN	830.4	0.4	0.08
DUCT WALL TC,CH 43,21 IN	840.8	0.9	0.84
DUCT WALL TC,CH 44,21 IN	833.6	0.4	0.32
TEST SECTION HOUSING THERMOCOUPLES			
TS SHELL-BOT(DEG F)	830.9	0.4	
TS GUARD HTR-BOT	802.4	0.7	
TS HTR-BOT	752.2	0.7	
TS SHELL-LOW CTR	848.6	0.4	
TS GUARD HTR-LOW CTR	847.6	0.9	
TS HTR-LOW CTR	773.9	0.6	
TS SHELL-UP CTR	848.8	0.5	
TS GUARD HTR-UP CTR	867.1	0.8	
TS HTR-UP CTR	844.4	1.1	
TS SHELL-TOP	845.8	1.4	
TS GUARD HTR-TOP	856.0	1.7	
TS HTR-TOP	861.1	1.1	
REFERENCE BOX THERMOCOUPLES			
150 DEG REF BOX 1(DEG F)	148.1	1.5	
150 DEG REF BOX 2	149.1	0.9	
150 DEG REF BOX 3	151.7	0.8	
150 DEG REF BOX 4	149.4	0.4	
150 DEG REF BOX 5	147.4	0.4	
MISCELLANEOUS			
SOD PUMP SPEED(RPM)	487.5	20.8	
EXPANSION TANK LEVEL(% FULL)	75.2	0.2	

TEST SERIES 10(BUNDLE 3C); TEST 10 RUN 130 01/13/78 10 56 55

CONDITIONS:
TEST SECTION FLOW: 0.63 L/S (9.9 GPM)
TEST SECTION POWER
(1 ROD HEATED): 5.0 KW (9.3 KW/M/ROD)(2.8 KW/FT/ROD)

TEST SECTION INLET TEMPERATURE: 443 DEG C (829 DEG F)
TEST SECTION OUTLET TEMPERATURE: 450 DEG C (842 DEG F)

HEAT BALANCE:

HEAT INPUT FROM 31 FUEL PIN SIMULATORS: 5.0 KW
HEAT ABSORBED BY SODIUM=
FLOW X SP.HEAT X (TS OUT TEMP - TS IN TEMP) 4.8 KW
% OF INPUT HEAT ACCOUNTED FOR: 95.7 %

INSTRUMENT	20-SEC AVG	STD DEV
HEATER POWERS(KW)		
HTR POWER IN ROD 30	5.0	0.0
HTR POWER IN RODS 8,9,10	0.1	0.0
HTR POWER IN RODS 14,15,16	0.1	0.0
HTR POWER IN RODS 1,3,11,19	0.1	0.0
HTR POWER IN RODS 5,6,13,17	0.1	0.0
HTR POWER IN RODS 4,7,12,18	0.0	0.0
HTR POWER IN RODS 2,31	-0.0	0.0
HTR POWER IN RODS 24,25,27,28	-0.3	0.0
HTR POWER IN RODS 33,34	0.0	0.0
HTR POWER IN RODS 21,22,36,37	0.0	0.0
FLOWS		
TEST SECTION(TS) FLOW IN(GPM)	9.9	0.1
TS FLOW OUT(GPM)	9.9	0.1
TS BYPASS FLOW(GPM)	1.7	0.1
LOOP FLOW TOTAL(GPM)	10.0	0.2
RADIATOR AIR FLOW(CFM)	1.2	0.0
PRESSURES		
TS IN PRESS(PSIG)	13.0	0.1
TS OUT PRESS(PSIG)	6.0	0.0
PUMP OUT PRESS(PSIG)	8.1	0.0
TS LINE PRESS IN(PSIG)	11.8	0.1
EXP TANK ARGON PRESS(PSIG)	2.5	0.1
TS BYP LINE PRESS IN(PSIG)	13.1	0.1
TS BYP LINE PRESS OUT(PSIG)	9.5	0.1

Test 10, run 130 (continued)

INSTRUMENT	20-SEC AVG	STD DEV	NORMALIZED TEMP
LOOP THERMOCOUPLES			
TEST SECT INLET WELL(DEG F)	829.5	0.4	
TEST SECT OUTLET WELL(DEG F)	842.3	0.5	
PUMP IN PIPE WALL TC	837.1	4.7	
PUMP OUT PIPE WALL TC	815.0	1.2	
RAD IN PIPE WALL TC	837.4	0.4	
RAD OUT PIPE WALL TC	818.6	0.5	
HEATER INTERNAL THERMOCOUPLES			
HTR TC IN HTR 08,12AB IN(DEG F)	831.8	0.5	0.18
HTR TC IN HTR 13,12AB IN	845.2	0.4	1.23
HTR TC IN HTR 18,12AB IN	828.1	0.4	-.11
HTR TC IN HTR 22,12AB IN	812.0	1.5	****
HTR TC IN HTR 08,12BC IN	831.7	0.2	0.17
HTR TC IN HTR 13,12BC IN	844.1	0.5	1.15
HTR TC IN HTR 18,12BC IN	828.6	0.7	-.07
HTR TC IN HTR 22,12BC IN	827.7	0.7	-.14
HTR TC IN HTR 09,15AB IN	835.3	1.2	0.45
HTR TC IN HTR 10,15BC IN	827.1	0.7	-.19
HTR TC IN HTR 16,15BC IN	829.7	1.1	0.02
HTR TC IN HTR 25,15BC IN	828.9	1.0	-.05
HTR TC IN HTR 02,15.1 IN	831.6	0.4	0.16
HTR TC IN HTR 03,15.1 IN	830.5	0.5	0.08
HTR TC IN HTR 06,15.1 IN	832.7	1.1	0.25
HTR TC IN HTR 15,15.1 IN	844.9	0.9	1.21
HTR TC IN HTR 24,15.1 IN	78.4	0.5	****
HTR TC IN HTR 33,15.1 IN	830.6	0.5	0.08
HTR TC IN HTR 36,15.1 IN	827.9	1.6	-.12
HTR TC IN HTR 02,15.4 IN	834.0	1.8	0.35
HTR TC IN HTR 03,15.4 IN	832.9	1.2	0.26
HTR TC IN HTR 06,15.4 IN	832.6	1.1	0.24
HTR TC IN HTR 15,15.4 IN	834.3	1.2	0.38
HTR TC IN HTR 24,15.4 IN	419.5	0.7	****
HTR TC IN HTR 33,15.4 IN	829.9	0.7	0.03
HTR TC IN HTR 34,15.4 IN	865.4	4.2	2.82
HTR TC IN HTR 36,15.4 IN	827.6	0.7	-.15
HTR TC IN HTR 02,15.6 IN	831.8	0.6	0.18
HTR TC IN HTR 03,15.6 IN	832.2	0.5	0.21
HTR TC IN HTR 06,15.6 IN	832.3	0.6	0.22
HTR TC IN HTR 15,15.6 IN	835.1	1.4	0.44
HTR TC IN HTR 24,15.6 IN	827.1	0.6	-.19
HTR TC IN HTR 33,15.6 IN	830.0	0.5	0.04
HTR TC IN HTR 34,15.6 IN	788.8	14.1	****
HTR TC IN HTR 36,15.6 IN	827.0	0.4	-.20
HTR TC IN HTR 03,15.9 IN	830.8	0.8	0.10
HTR TC IN HTR 06,15.9 IN	831.7	0.2	0.17
HTR TC IN HTR 15,15.9 IN	835.9	0.7	0.50
HTR TC IN HTR 24,15.9 IN	827.2	0.6	-.18
HTR TC IN HTR 33,15.9 IN	828.4	0.1	-.08
HTR TC IN HTR 34,15.9 IN	831.9	3.9	0.19
HTR TC IN HTR 36,15.9 IN	825.6	2.3	-.31

Test 10, run 130 (continued)

INSTRUMENT	20-SEC AVG	STD DEV	NORMALIZED TEMP
HTR TC IN HTR 04,16.1 IN	831.6	0.3	0.16
HTR TC IN HTR 05,16.1 IN	837.6	0.2	0.63
HTR TC IN HTR 07,16.1 IN	831.3	0.4	0.14
HTR TC IN HTR 21,16.1 IN	828.3	0.4	-.10
HTR TC IN HTR 27,16.1 IN	845.6	1.3	1.26
HTR TC IN HTR 04,16.4 IN	833.4	0.7	0.30
HTR TC IN HTR 05,16.4 IN	837.3	0.5	0.61
HTR TC IN HTR 07,16.4 IN	831.1	0.4	0.13
HTR TC IN HTR 21,16.4 IN	829.4	0.3	-.01
HTR TC IN HTR 27,16.4 IN	845.2	1.1	1.23
HTR TC IN HTR 04,16.6 IN	833.8	0.4	0.34
HTR TC IN HTR 05,16.6 IN	836.3	0.4	0.53
HTR TC IN HTR 07,16.6 IN	832.3	0.6	0.22
HTR TC IN HTR 21,16.6 IN	827.5	0.3	-.16
HTR TC IN HTR 27,16.6 IN	842.6	0.7	1.03
HTR TC IN HTR 04,16.9 IN	834.4	0.3	0.38
HTR TC IN HTR 07,16.9 IN	832.5	0.8	0.24
HTR TC IN HTR 21,16.9 IN	825.8	1.0	-.29
HTR TC IN HTR 27,16.9 IN	843.2	0.4	1.08
HTR TC IN HTR 11,18AB IN	829.4	0.5	-.01
HTR TC IN HTR 12,18AB IN	836.3	0.5	0.53
HTR TC IN HTR 14,18AB IN	885.3	0.8	4.38
HTR TC IN HTR 30,18AB IN	921.7	7.2	7.24
HTR TC IN HTR 11,18BC IN	830.4	0.5	0.07
HTR TC IN HTR 12,18BC IN	836.8	0.5	0.57
HTR TC IN HTR 14,18BC IN	889.7	3.0	4.73
HTR TC IN HTR 17,18BC IN	828.8	0.4	-.06
HTR TC IN HTR 30,18BC IN	903.4	7.2	5.80
WIRE WRAP THERMOCOUPLES			
WW TC ON HTR 12,-1 IN(DEG F)	831.5	4.2	0.16
WW TC ON HTR 16,-1 IN	831.2	0.5	0.13
WW TC ON HTR 12,01 IN	830.3	0.4	0.06
WW TC ON HTR 16,09 IN	834.1	0.4	0.36
WW TC ON HTR 04,11 IN	833.2	0.5	0.29
WW TC ON HTR 05,11 IN	833.4	0.2	0.30
WW TC ON HTR 13,11 IN	835.1	0.4	0.44
WW TC ON HTR 17,11 IN	831.2	0.4	0.13
WW TC ON HTR 28,11 IN	861.7	0.4	2.53
WW TC ON HTR 31,11 IN	840.0	0.5	0.82
WW TC ON HTR 03,13 IN	828.0	0.6	-.12
WW TC ON HTR 13,13 IN	851.0	0.8	1.69
WW TC ON HTR 15,13 IN	844.1	0.3	1.15
WW TC ON HTR 17,13 IN	831.3	0.5	0.14
WW TC ON HTR 22,13 IN	832.5	0.5	0.23
WW TC ON HTR 01,15 IN	836.9	0.4	0.58
WW TC ON HTR 03,15 IN	832.6	0.6	0.24
WW TC ON HTR 08,15 IN	829.4	1.3	-.01
WW TC ON HTR 10,15 IN	831.4	0.4	0.15
WW TC ON HTR 15,15 IN	858.5	0.4	2.28

Test 10, run 130 (continued)

INSTRUMENT	20-SEC AVG	STD DEV	NORMALIZED TEMP
WW TC ON HTR 19.15 IN	833.5	0.3	0.31
WW TC ON HTR 25.15 IN	840.4	0.4	0.85
WW TC ON HTR 36.15 IN	830.8	0.9	0.10
WW TC ON HTR 01.17 IN	836.8	0.5	0.57
WW TC AJ HTR 02.17 IN	833.4	0.3	0.30
WW TC OP HTR 02.17 IN	832.5	0.4	0.23
WW TC ON HTR 08.17 IN	831.0	0.5	0.12
WW TC ON HTR 10.17 IN	831.4	0.4	0.14
WW TC ON HTR 11.17 IN	835.0	0.5	0.43
WW TC ON HTR 18.17 IN	833.2	0.4	0.29
WW TC ON HTR 19.17 IN	833.7	0.4	0.32
WW TC ON HTR 21.17 IN	832.8	0.5	0.26
WW TC ON HTR 22.17 IN	833.0	0.5	0.27
WW TC ON HTR 33.17 IN	833.2	0.5	0.29
WW TC ON HTR 37.17 IN	830.1	1.4	0.05
WW TC ON HTR 06.19 IN	839.3	0.4	0.77
WW TC AJ HTR 07.19 IN	833.3	0.4	0.30
WW TC OP HTR 07.19 IN	832.7	0.4	0.25
WW TC ON HTR 09.19 IN	831.7	0.2	0.17
WW TC ON HTR 14.19 IN	866.5	0.4	2.91
WW TC ON HTR 18.19 IN	833.7	0.4	0.33
WW TC ON HTR 27.19 IN	862.0	0.4	2.55
WW TC ON HTR 30.19 IN	907.0	0.3	6.08
WW TC ON HTR 34.19 IN	826.4	0.9	-.24
WW TC ON HTR 36.19 IN	831.1	0.4	0.12
WW TC ON HTR 37.19 IN	830.0	0.8	0.04
WW TC ON HTR 05.21 IN	843.6	0.4	1.11
WW TC ON HTR 06.21 IN	837.0	0.5	0.59
WW TC ON HTR 21.21 IN	834.7	0.4	0.41
WW TC ON HTR 24.21 IN	841.4	0.4	0.93
WW TC ON HTR 25.21 IN	843.6	0.5	1.11
WW TC ON HTR 27.21 IN	858.1	0.3	2.25
WW TC ON HTR 30.21 IN	901.6	0.5	5.66
WW TC ON HTR 33.21 IN	830.5	1.2	0.07
WW TC ON HTR 34.21 IN	827.2	1.0	-.18
WW TC ON HTR 04.23 IN	838.5	0.8	0.71
WW TC ON HTR 09.23 IN	832.5	0.8	0.24
WW TC ON HTR 14.23 IN	874.7	0.3	3.55
WW TC ON HTR 24.23 IN	839.3	0.2	0.77
WW TC ON HTR 28.23 IN	874.6	0.4	3.54
WW TC ON HTR 31.23 IN	839.4	0.4	0.78
WW TC ON ROD 01.25 IN	839.8	0.4	0.81
WW TC ON ROD 02.25 IN	830.5	0.4	0.08
WW TC ON ROD 05.25 IN	862.4	0.1	2.58
WW TC ON ROD 08.25 IN	831.7	0.2	0.17
WW TC ON ROD 14.25 IN	863.1	0.3	2.63
WW TC ON ROD 04.27 IN	854.6	0.4	1.97
WW TC ON ROD 07.27 IN	837.9	1.5	0.66
WW TC ON ROD 12.27 IN	863.5	0.6	2.67
WW TC ON ROD 16.27 IN	840.8	0.3	0.89
WW TC ON ROD 18.27 IN	833.2	0.4	0.29

Test 10, run 130 (continued)

INSTRUMENT	20-SEC AVG	STD DEV	NORMALIZED TEMP
WW TC ON ROD 03.29 IN	837.5	0.2	0.63
WW TC ON ROD 06.29 IN	847.5	0.2	1.41
WW TC ON ROD 10.29 IN	840.5	1.2	0.87
WW TC ON ROD 01.37 IN	836.3	0.4	0.54
WW TC ON ROD 02.37 IN	831.8	0.0	0.18
WW TC ON ROD 08.37 IN	833.7	0.4	0.33
WW TC ON ROD 14.37 IN	855.8	0.1	2.06
WW TC ON ROD 04.51 IN	850.8	0.2	1.67
WW TC ON ROD 07.51 IN	837.9	0.6	0.66
WW TC ON ROD 12.51 IN	855.0	0.1	2.00
WW TC ON ROD 16.51 IN	840.5	0.4	0.86
WW TC ON ROD 18.51 IN	835.9	0.1	0.50
WW TC ON ROD 03.63 IN	842.6	0.3	1.03
WW TC ON ROD 06.63 IN	841.7	0.2	0.95
WW TC ON ROD 10.63 IN	844.9	0.3	1.21
DUCT THERMOCOUPLES			
DUCT WALL TC.CH 38.19 IN(DEG F)	849.7	0.9	1.58
DUCT WALL TC.CH 53.19 IN	828.7	0.4	-.06
DUCT WALL TC.CH 28.21 IN	828.4	0.2	-.09
DUCT WALL TC.CH 43.21 IN	890.2	0.7	4.76
DUCT WALL TC.CH 44.21 IN	857.2	0.5	2.17
TEST SECTION HOUSING THERMOCOUPLES			
TS SHELL-BOT(DEG F)	829.7	0.5	
TS GUARD HTR-BOT	798.8	0.4	
TS HTR-BOT	747.2	0.5	
TS SHELL-LOW CTR	843.5	0.4	
TS GUARD HTR-LOW CTR	841.7	0.8	
TS HTR-LOW CTR	767.4	0.7	
TS SHELL-UP CTR	850.0	0.5	
TS GUARD HTR-UP CTR	861.5	0.9	
TS HTR-UP CTR	837.0	0.9	
TS SHELL-TOP	845.4	0.9	
TS GUARD HTR-TOP	852.3	1.3	
TS HTR-TOP	854.0	1.2	
REFERENCE BOX THERMOCOUPLES			
150 DEG REF BOX 1(DEG F)	148.0	1.3	
150 DEG REF BOX 2	148.9	0.6	
150 DEG REF BOX 3	151.7	0.9	
150 DEG REF BOX 4	149.5	0.4	
150 DEG REF BOX 5	148.2	0.4	
MISCELLANEOUS			
SOD PUMP SPEED(RPM)	498.3	2.6	
EXPANSION TANK LEVEL(% FULL)	75.6	0.2	

TEST SERIES 10(BUNDLE 3C); TEST 10 RUN 131 01/13/78 11 15 7

CONDITIONS:
TEST SECTION FLOW: 0.62 L/S (9.8 GPM)
TEST SECTION POWER
(1 ROD HEATED): 5.1 KW (9.5 KW/M/ROD)(2.9 KW/FT/ROD)

TEST SECTION INLET TEMPERATURE: 444 DEG C (831 DEG F)
TEST SECTION OUTLET TEMPERATURE: 451 DEG C (845 DEG F)

HEAT BALANCE:

HEAT INPUT FROM 31 FUEL PIN SIMULATORS: 5.1 KW
HEAT ABSORBED BY SODIUM=
FLOW X SP.HEAT X (TS OUT TEMP - TS IN TEMP) 5.0 KW
% OF INPUT HEAT ACCOUNTED FOR: 99.0 %

INSTRUMENT	20-SEC AVG	STD DEV
HEATER POWERS(KW)		
HTR POWER IN ROD 31	5.1	0.0
HTR POWER IN RODS 8,9,10	0.1	0.0
HTR POWER IN RODS 14,15,16	0.1	0.0
HTR POWER IN RODS 1,3,11,19	0.1	0.0
HTR POWER IN RODS 5,6,13,17	0.1	0.0
HTR POWER IN RODS 4,7,12,18	0.0	0.0
HTR POWER IN RODS 2,30	-0.0	0.0
HTR POWER IN RODS 24,25,27,28	-0.3	0.0
HTR POWER IN RODS 33,34	0.0	0.0
HTR POWER IN RODS 21,22,36,37	0.0	0.0
FLOWS		
TEST SECTION(TS) FLOW IN(GPM)	9.8	0.1
TS FLOW OUT(GPM)	9.8	0.1
TS BYPASS FLOW(GPM)	1.8	0.1
LOOP FLOW TOTAL(GPM)	10.0	0.2
RADIATOR AIR FLOW(CFM)	1.2	0.0
PRESSURES		
TS IN PRESS(PSIG)	13.0	0.1
TS OUT PRESS(PSIG)	6.0	0.0
PUMP OUT PRESS(PSIG)	8.1	0.1
TS LINE PRESS IN(PSIG)	11.8	0.1
EXP TANK ARGON PRESS(PSIG)	2.5	0.1
TS BYP LINE PRESS IN(PSIG)	13.0	0.1
TS BYP LINE PRESS OUT(PSIG)	9.6	0.1

Test 10, run 131 (continued)

INSTRUMENT	20-SEC AVG	STD DEV	NORMALIZED TEMP
LOOP THERMOCOUPLES			
TEST SECT INLET WELL(DEG F)	831.8	0.3	
TEST SECT OUTLET WELL(DEG F)	845.3	0.5	
PUMP IN PIPE WALL TC	838.8	4.6	
PUMP OUT PIPE WALL TC	816.6	1.2	
RAD IN PIPE WALL TC	839.2	0.2	
RAD OUT PIPE WALL TC	820.2	0.4	
HEATER INTERNAL THERMOCOUPLES			
HTR TC IN HTR 08,12AB IN(DEG F)	834.2	0.4	0.17
HTR TC IN HTR 13,12AB IN	837.3	0.5	0.40
HTR TC IN HTR 18,12AB IN	830.7	0.4	-.08
HTR TC IN HTR 22,12AB IN	829.8	0.4	-.15
HTR TC IN HTR 08,12BC IN	834.6	0.5	0.21
HTR TC IN HTR 13,12BC IN	836.7	0.7	0.36
HTR TC IN HTR 18,12BC IN	830.8	0.4	-.08
HTR TC IN HTR 22,12BC IN	829.7	0.8	-.16
HTR TC IN HTR 09,15AB IN	837.8	1.1	0.44
HTR TC IN HTR 10,15BC IN	830.4	0.5	-.11
HTR TC IN HTR 16,15BC IN	837.0	0.6	0.38
HTR TC IN HTR 25,15BC IN	830.4	1.4	-.11
HTR TC IN HTR 02,15.1 IN	834.3	0.3	0.18
HTR TC IN HTR 03,15.1 IN	833.7	0.4	0.14
HTR TC IN HTR 06,15.1 IN	835.9	0.5	0.30
HTR TC IN HTR 15,15.1 IN	843.5	0.4	0.86
HTR TC IN HTR 24,15.1 IN	78.6	0.4	****
HTR TC IN HTR 33,15.1 IN	835.1	0.8	0.24
HTR TC IN HTR 36,15.1 IN	830.6	0.4	-.09
HTR TC IN HTR 02,15.4 IN	834.2	0.8	0.18
HTR TC IN HTR 03,15.4 IN	834.3	0.6	0.18
HTR TC IN HTR 06,15.4 IN	834.9	0.5	0.22
HTR TC IN HTR 15,15.4 IN	836.5	0.4	0.35
HTR TC IN HTR 24,15.4 IN	420.0	0.6	****
HTR TC IN HTR 33,15.4 IN	836.2	1.0	0.32
HTR TC IN HTR 34,15.4 IN	802.5	34.9	****
HTR TC IN HTR 36,15.4 IN	829.6	0.6	-.16
HTR TC IN HTR 02,15.6 IN	834.5	0.4	0.20
HTR TC IN HTR 03,15.6 IN	834.3	0.7	0.18
HTR TC IN HTR 06,15.6 IN	835.4	0.4	0.26
HTR TC IN HTR 15,15.6 IN	835.9	0.2	0.30
HTR TC IN HTR 24,15.6 IN	829.9	0.9	-.14
HTR TC IN HTR 33,15.6 IN	834.6	1.1	0.21
HTR TC IN HTR 34,15.6 IN	870.4	41.4	2.85
HTR TC IN HTR 36,15.6 IN	829.5	0.4	-.18
HTR TC IN HTR 03,15.9 IN	832.5	0.6	0.05
HTR TC IN HTR 06,15.9 IN	835.1	0.2	0.24
HTR TC IN HTR 15,15.9 IN	837.9	0.5	0.45
HTR TC IN HTR 24,15.9 IN	830.4	0.4	-.11
HTR TC IN HTR 33,15.9 IN	832.7	0.8	0.06
HTR TC IN HTR 34,15.9 IN	826.5	4.5	-.40
HTR TC IN HTR 36,15.9 IN	830.9	0.7	-.07

Test 10, run 131 (continued)

INSTRUMENT	20-SEC AVG	STD DEV	NORMALIZED TEMP
HTR TC IN HTR 04,16.1 IN	832.4	0.7	0.05
HTR TC IN HTR 05,16.1 IN	837.7	0.3	0.44
HTR TC IN HTR 07,16.1 IN	834.4	0.5	0.19
HTR TC IN HTR 21,16.1 IN	831.5	0.4	-.03
HTR TC IN HTR 27,16.1 IN	840.3	1.4	0.62
HTR TC IN HTR 04,16.4 IN	832.7	1.0	0.07
HTR TC IN HTR 05,16.4 IN	837.8	0.7	0.44
HTR TC IN HTR 07,16.4 IN	834.0	0.4	0.16
HTR TC IN HTR 21,16.4 IN	831.6	0.6	-.02
HTR TC IN HTR 27,16.4 IN	839.8	0.7	0.59
HTR TC IN HTR 04,16.6 IN	835.4	0.7	0.27
HTR TC IN HTR 05,16.6 IN	837.4	0.6	0.41
HTR TC IN HTR 07,16.6 IN	835.8	0.4	0.29
HTR TC IN HTR 21,16.6 IN	830.9	0.8	-.07
HTR TC IN HTR 27,16.6 IN	837.1	0.6	0.39
HTR TC IN HTR 04,16.9 IN	834.5	0.5	0.20
HTR TC IN HTR 07,16.9 IN	834.9	0.4	0.23
HTR TC IN HTR 21,16.9 IN	829.0	1.1	-.21
HTR TC IN HTR 27,16.9 IN	836.6	1.0	0.35
HTR TC IN HTR 11,18AB IN	831.6	0.4	-.02
HTR TC IN HTR 12,18AB IN	834.1	0.5	0.17
HTR TC IN HTR 14,18AB IN	867.9	0.6	2.67
HTR TC IN HTR 30,18AB IN	882.1	7.5	3.72
HTR TC IN HTR 11,18BC IN	831.5	0.4	-.02
HTR TC IN HTR 12,18BC IN	834.7	0.6	0.21
HTR TC IN HTR 14,18BC IN	852.7	4.5	1.55
HTR TC IN HTR 17,18BC IN	831.7	0.3	-.01
HTR TC IN HTR 30,18BC IN	886.0	7.3	4.01
WIRE WRAP THERMOCOUPLES			
WW TC ON HTR 12,-1 IN(DEG F)	835.1	3.6	0.25
WW TC ON HTR 16,-1 IN	833.3	0.5	0.11
WW TC ON HTR 12,01 IN	833.4	0.4	0.12
WW TC ON HTR 16,09 IN	842.3	0.6	0.77
WW TC ON HTR 04,11 IN	835.8	0.5	0.30
WW TC ON HTR 05,11 IN	834.9	0.4	0.23
WW TC ON HTR 13,11 IN	835.1	0.4	0.24
WW TC ON HTR 17,11 IN	833.6	0.4	0.13
WW TC ON HTR 28,11 IN	845.1	0.2	0.98
WW TC ON HTR 31,11 IN	881.1	0.4	3.65
WW TC ON HTR 03,13 IN	830.9	0.5	-.07
WW TC ON HTR 13,13 IN	843.4	0.5	0.85
WW TC ON HTR 15,13 IN	871.2	0.4	2.92
WW TC ON HTR 17,13 IN	834.3	0.4	0.18
WW TC ON HTR 22,13 IN	835.2	0.4	0.25
WW TC ON HTR 01,15 IN	839.3	0.5	0.55
WW TC ON HTR 03,15 IN	835.3	0.6	0.26
WW TC ON HTR 08,15 IN	831.8	1.2	-.00
WW TC ON HTR 10,15 IN	833.0	0.5	0.09
WW TC ON HTR 15,15 IN	887.8	0.6	4.14
WW TC ON HTR 19,15 IN	836.6	0.5	0.36

Test 10, run 131 (continued)

INSTRUMENT	20-SEC AVG	STD DEV	NORMALIZED TEMP
WW TC ON HTR 25,15 IN	838.2	0.5	0.47
WW TC ON HTR 36,15 IN	833.0	1.3	0.09
WW TC ON HTR 01,17 IN	836.4	0.6	0.34
WW TC AJ HTR 02,17 IN	835.6	0.5	0.28
WW TC OP HTR 02,17 IN	834.8	0.4	0.22
WW TC ON HTR 08,17 IN	834.4	0.4	0.19
WW TC ON HTR 10,17 IN	834.0	0.4	0.16
WW TC ON HTR 11,17 IN	835.0	0.6	0.24
WW TC ON HTR 18,17 IN	836.5	0.4	0.34
WW TC ON HTR 19,17 IN	836.2	0.5	0.32
WW TC ON HTR 21,17 IN	835.9	0.3	0.30
WW TC ON HTR 22,17 IN	835.8	0.3	0.29
WW TC ON HTR 33,17 IN	839.7	0.6	0.58
WW TC ON HTR 37,17 IN	832.5	1.4	0.05
WW TC ON HTR 06,19 IN	840.7	0.4	0.66
WW TC AJ HTR 07,19 IN	835.7	0.4	0.29
WW TC OP HTR 07,19 IN	835.1	0.3	0.24
WW TC ON HTR C9,19 IN	834.4	0.5	0.19
WW TC ON HTR 14,19 IN	854.9	0.8	1.71
WW TC ON HTR 18,19 IN	836.3	0.4	0.33
WW TC ON HTR 27,19 IN	856.6	0.3	1.84
WW TC ON HTR 30,19 IN	876.8	0.5	3.33
WW TC ON HTR 34,19 IN	829.7	0.9	-.16
WW TC ON HTR 36,19 IN	833.5	0.7	0.12
WW TC ON HTR 37,19 IN	832.5	1.0	0.05
WW TC ON HTR 05,21 IN	842.1	0.4	0.76
WW TC ON HTR 06,21 IN	838.5	0.4	0.49
WW TC ON HTR 21,21 IN	837.5	0.3	0.42
WW TC ON HTR 24,21 IN	841.2	0.4	0.69
WW TC ON HTR 25,21 IN	841.8	0.6	0.74
WW TC ON HTR 27,21 IN	852.9	0.5	1.56
WW TC ON HTR 30,21 IN	883.9	0.4	3.85
WW TC ON HTR 33,21 IN	834.9	1.4	0.23
WW TC ON HTR 34,21 IN	830.6	1.1	-.09
WW TC ON HTR 04,23 IN	838.0	0.4	0.45
WW TC ON HTR 09,23 IN	834.4	0.4	0.19
WW TC ON HTR 14,23 IN	868.6	0.6	2.72
WW TC ON HTR 24,23 IN	840.0	0.2	0.61
WW TC ON HTR 28,23 IN	862.0	0.5	2.23
WW TC ON HTR 31,23 IN	857.4	0.2	1.89
WW TC ON ROD 01,25 IN	841.0	0.3	0.68
WW TC ON ROD 02,25 IN	832.7	0.4	0.07
WW TC ON ROD C5,25 IN	863.5	0.4	2.35
WW TC ON ROD C8,25 IN	834.5	0.4	0.20
WW TC ON ROD 14,25 IN	880.0	0.4	3.56
WW TC ON ROD C4,27 IN	849.1	0.1	1.28
WW TC ON ROD 07,27 IN	841.5	1.3	0.72
WW TC ON ROD 12,27 IN	857.7	0.9	1.91
WW TC ON ROD 16,27 IN	854.9	0.4	1.70
WW TC ON ROD 18,27 IN	837.2	0.4	0.40
WW TC ON ROD 03,29 IN	836.6	0.4	0.35
WW TC ON ROD 06,29 IN	850.8	0.1	1.40

Test 10, run 131 (continued)

INSTRUMENT	20-SEC AVG	STD DEV	NORMALIZED TEMP
WW TC ON ROD 10.29 IN	840.3	1.1	0.63
WW TC ON ROD 01.37 IN	839.0	0.4	0.53
WW TC ON ROD 02.37 IN	834.3	0.1	0.18
WW TC ON ROD 08.37 IN	836.8	0.3	0.37
WW TC ON ROD 14.37 IN	863.4	0.6	2.34
WW TC ON ROD 04.51 IN	851.8	0.5	1.48
WW TC ON ROD C7.51 IN	841.6	0.5	0.72
WW TC ON ROD 12.51 IN	856.6	0.5	1.83
WW TC ON ROD 16.51 IN	846.7	0.2	1.10
WW TC ON ROD 18.51 IN	840.0	0.1	0.61
WW TC ON ROD 03.63 IN	844.1	0.2	0.91
WW TC ON ROD 06.63 IN	846.7	0.2	1.10
WW TC ON ROD 10.63 IN	845.1	0.3	0.98
DUCT THERMOCOUPLES			
DUCT WALL TC.CH 38.19 IN(DEG F)	844.5	0.7	0.94
DUCT WALL TC.CH 53.19 IN	831.8	0.0	-.00
DUCT WALL TC.CH 28.21 IN	831.2	0.4	-.05
DUCT WALL TC.CH 43.21 IN	879.9	0.8	3.56
DUCT WALL TC.CH 44.21 IN	888.2	0.4	4.17
TEST SECTION HOUSING THERMOCCUPLES			
TS SHELL-BOT(DEG F)	832.5	0.6	
TS GUARD HTR-BOT	800.8	0.5	
TS HTR-BOT	748.2	0.6	
TS SHELL-LOW CTR	846.1	0.4	
TS GUARD HTR-LOW CTR	844.5	0.7	
TS HTR-LOW CTR	769.5	0.8	
TS SHELL-UP CTR	854.4	0.5	
TS GUARD HTR-UP CTR	864.3	1.0	
TS HTR-UP CTR	838.5	1.1	
TS SHELL-TOP	849.0	0.9	
TS GUARD HTR-TOP	854.9	1.3	
TS HTR-TOP	855.3	1.2	
REFERENCE BOX THERMOCOUPLES			
150 DEG REF BOX 1(DEG F)	148.4	1.3	
150 DEG REF BOX 2	148.9	0.6	
150 DEG REF BOX 3	151.7	0.8	
150 DEG REF BOX 4	149.4	0.7	
150 DEG REF BOX 5	148.1	0.4	
MISCELLANEOUS			
SOD PUMP SPEED(RPM)	497.3	24.0	
EXPANSION TANK LEVEL(% FULL)	75.2	0.1	

TEST SERIES 10(BUNDLE 3C); TEST 10 RUN 133 01/18/78 12 22 16

CONDITIONS:

TEST SECTION FLOW: 0.62 L/S (9.8 GPM)

TEST SECTION POWER
(1 ROD HEATED): 5.1 KW (9.6 KW/M/ROD)(2.9 KW/FT/ROD)

TEST SECTION INLET TEMPERATURE: 442 DEG C (829 DEG F)

TEST SECTION OUTLET TEMPERATURE: 450 DEG C (842 DEG F)

HEAT BALANCE:

HEAT INPUT FROM 31 FUEL PIN SIMULATORS: 5.1 KW

HEAT ABSORBED BY SODIUM=
FLOW X SP.HEAT X (TS OUT TEMP - TS IN TEMP) 5.0 KW

% OF INPUT HEAT ACCOUNTED FOR: 97.6 %

INSTRUMENT	20-SEC AVG	STD DEV
HEATER POWERS(KW)		
HTR POWER IN ROD 33	5.1	0.0
HTR POWER IN RODS 8,9,10	0.1	0.0
HTR POWER IN RODS 14,15,16	0.0	0.0
HTR POWER IN RODS 1,3,11,19	0.0	0.0
HTR POWER IN RODS 5,6,13,17	0.1	0.0
HTR POWER IN RODS 4,7,12,18	0.0	0.0
HTR POWER IN RODS 30,31	-0.0	0.0
HTR POWER IN RODS 24,25,27,28	-0.3	0.0
HTR POWER IN RODS 2,34	-0.0	0.0
HTR POWER IN RODS 21,22,36,37	0.0	0.0
FLOWS		
TEST SECTION(TS) FLOW IN(GPM)	9.8	0.1
TS FLOW OUT(GPM)	9.9	0.1
TS BYPASS FLOW(GPM)	0.8	0.1
LOOP FLOW TOTAL(GPM)	9.9	0.2
RADIATOR AIR FLOW(CFM)	1.1	0.0
PRESSURES		
TS IN PRESS(PSIG)	12.7	0.1
TS OUT PRESS(PSIG)	5.9	0.0
PUMP OUT PRESS(PSIG)	7.9	0.0
TS LINE PRESS IN(PSIG)	11.7	0.1
EXP TANK ARGON PRESS(PSIG)	2.4	0.1
TS BYP LINE PRESS IN(PSIG)	12.8	0.1
TS BYP LINE PRESS OUT(PSIG)	9.4	0.1

Test 10, run 133 (continued)

INSTRUMENT	20-SEC AVG	STD DEV	NORMALIZED TEMP
LOOP THERMOCOUPLES			
TEST SECT INLET WELL(DEG F)	829.2	0.5	
TEST SECT OUTLET WELL(DEG F)	842.7	0.4	
PUMP IN PIPE WALL TC	836.3	3.8	
PUMP OUT PIPE WALL TC	814.0	3.3	
RAD IN PIPE WALL TC	839.4	2.9	
RAD OUT PIPE WALL TC	814.4	0.6	
HEATER INTERNAL THERMOCOUPLES			
HTR TC IN HTR 08,12AB IN(DEG F)	831.9	0.4	0.20
HTR TC IN HTR 13,12AB IN	829.3	0.5	0.01
HTR TC IN HTR 18,12AB IN	828.6	0.7	-.04
HTR TC IN HTR 22,12AB IN	804.7	9.1	****
HTR TC IN HTR 08,12BC IN	831.8	0.4	0.19
HTR TC IN HTR 13,12BC IN	828.7	0.7	-.04
HTR TC IN HTR 18,12BC IN	830.3	1.0	0.08
HTR TC IN HTR 22,12BC IN	828.0	1.3	-.09
HTR TC IN HTR 09,15AB IN	824.2	8.5	-.37
HTR TC IN HTR 10,15BC IN	826.5	0.6	-.20
HTR TC IN HTR 16,15BC IN	880.5	1.0	3.79
HTR TC IN HTR 25,15BC IN	826.5	1.1	-.20
HTR TC IN HTR 02,15.1 IN	831.9	0.4	0.20
HTR TC IN HTR 03,15.1 IN	830.9	0.3	0.12
HTR TC IN HTR 06,15.1 IN	833.1	0.5	0.29
HTR TC IN HTR 15,15.1 IN	831.6	0.4	0.18
HTR TC IN HTR 24,15.1 IN	827.5	1.6	-.13
HTR TC IN HTR 33,15.1 IN	917.4	1.0	6.52
HTR TC IN HTR 36,15.1 IN	827.9	2.7	-.09
HTR TC IN HTR 02,15.4 IN	832.8	0.9	0.26
HTR TC IN HTR 03,15.4 IN	831.4	0.8	0.16
HTR TC IN HTR 06,15.4 IN	833.6	0.5	0.33
HTR TC IN HTR 15,15.4 IN	829.9	0.6	0.05
HTR TC IN HTR 24,15.4 IN	827.1	2.4	-.16
HTR TC IN HTR 33,15.4 IN	915.9	1.9	6.40
HTR TC IN HTR 34,15.4 IN	963.5	55.9	9.92
HTR TC IN HTR 36,15.4 IN	827.5	4.2	-.12
HTR TC IN HTR 02,15.6 IN	832.1	0.5	0.22
HTR TC IN HTR 03,15.6 IN	832.0	0.4	0.21
HTR TC IN HTR 06,15.6 IN	833.4	0.9	0.31
HTR TC IN HTR 15,15.6 IN	829.9	0.5	0.05
HTR TC IN HTR 24,15.6 IN	826.8	0.6	-.18
HTR TC IN HTR 33,15.6 IN	910.5	1.2	6.00
HTR TC IN HTR 34,15.6 IN	782.7	14.6	****
HTR TC IN HTR 36,15.6 IN	827.5	1.2	-.13
HTR TC IN HTR 03,15.9 IN	831.2	1.0	0.15
HTR TC IN HTR 06,15.9 IN	834.1	0.7	0.36
HTR TC IN HTR 15,15.9 IN	830.5	0.5	0.10
HTR TC IN HTR 24,15.9 IN	827.5	1.8	-.13
HTR TC IN HTR 33,15.9 IN	909.6	0.5	5.93
HTR TC IN HTR 34,15.9 IN	865.8	12.6	2.70

Test 10, run 133 (continued)

INSTRUMENT	20-SEC AVG	STD DEV	NORMALIZED TEMP
HTR TC IN HTR 36,15.9 IN	826.9	1.4	-.17
HTR TC IN HTR 04,16.1 IN	829.1	0.4	-.00
HTR TC IN HTR 05,16.1 IN	832.1	0.5	0.21
HTR TC IN HTR 07,16.1 IN	832.4	0.7	0.24
HTR TC IN HTR 21,16.1 IN	828.3	0.4	-.07
HTR TC IN HTR 27,16.1 IN	829.8	1.3	0.05
HTR TC IN HTR 04,16.4 IN	830.3	0.5	0.09
HTR TC IN HTR 05,16.4 IN	831.3	2.1	0.15
HTR TC IN HTR 07,16.4 IN	831.8	0.2	0.19
HTR TC IN HTR 21,16.4 IN	828.6	0.8	-.04
HTR TC IN HTR 27,16.4 IN	829.9	1.3	0.06
HTR TC IN HTR 04,16.6 IN	831.4	0.4	0.16
HTR TC IN HTR 05,16.6 IN	832.5	0.6	0.24
HTR TC IN HTR 07,16.6 IN	834.3	0.7	0.38
HTR TC IN HTR 21,16.6 IN	827.7	0.4	-.11
HTR TC IN HTR 27,16.6 IN	828.8	0.8	-.03
HTR TC IN HTR 04,16.9 IN	831.1	0.4	0.14
HTR TC IN HTR 07,16.9 IN	833.2	1.0	0.29
HTR TC IN HTR 21,16.9 IN	826.2	0.7	-.22
HTR TC IN HTR 27,16.9 IN	829.9	5.8	0.05
HTR TC IN HTR 11,18AB IN	827.6	0.4	-.12
HTR TC IN HTR 12,18AB IN	828.1	0.6	-.08
HTR TC IN HTR 14,18AB IN	860.6	9.5	2.32
HTR TC IN HTR 30,18AB IN	844.6	7.4	1.14
HTR TC IN HTR 11,18BC IN	828.2	0.4	-.07
HTR TC IN HTR 12,18BC IN	827.9	0.5	-.09
HTR TC IN HTR 14,18BC IN	848.2	6.6	1.40
HTR TC IN HTR 17,18BC IN	839.2	0.4	0.74
HTR TC IN HTR 30,18BC IN	842.2	7.6	0.96
WIRE WRAP THERMCCOUPLES			
WW TC ON HTR 12,-1 IN(DEG F)	831.7	5.1	0.19
WW TC ON HTR 16,-1 IN	830.9	0.3	0.13
WW TC ON HTR 12,01 IN	830.4	8.9	0.09
WW TC ON HTR 16,09 IN	848.6	0.5	1.43
WW TC ON HTR 04,11 IN	832.3	0.5	0.23
WW TC ON HTR 05,11 IN	831.0	0.3	0.14
WW TC ON HTR 13,11 IN	830.5	0.5	0.10
WW TC ON HTR 17,11 IN	842.8	0.4	1.00
WW TC ON HTR 28,11 IN	833.9	0.4	0.35
WW TC ON HTR 31,11 IN	855.0	0.5	1.90
WW TC ON HTR 03,13 IN	827.6	1.5	-.12
WW TC ON HTR 13,13 IN	831.3	0.6	0.16
WW TC ON HTR 15,13 IN	847.6	0.5	1.36
WW TC ON HTR 17,13 IN	869.3	0.5	2.96
WW TC ON HTR 22,13 IN	832.9	0.5	0.27
WW TC ON HTR 01,15 IN	838.7	0.4	0.70
WW TC ON HTR 03,15 IN	831.5	0.4	0.17
WW TC ON HTR 08,15 IN	829.4	2.6	0.01
WW TC ON HTR 10,15 IN	830.3	0.4	0.08
WW TC ON HTR 15,15 IN	847.5	0.3	1.35

Test 10, run 133 (continued)

INSTRUMENT	20-SEC AVG	STD DEV	NORMALIZED TEMP
WW TC ON HTR 19,15 IN	834.6	0.4	0.40
WW TC ON HTR 25,15 IN	832.6	0.5	0.25
WW TC ON HTR 36,15 IN	831.8	1.5	0.19
WW TC ON HTR 01,17 IN	832.0	0.5	0.21
WW TC AJ HTR 02,17 IN	833.0	0.7	0.28
WW TC OP HTR 02,17 IN	831.6	0.3	0.18
WW TC ON HTR 08,17 IN	830.5	0.6	0.10
WW TC ON HTR 10,17 IN	830.4	0.5	0.09
WW TC ON HTR 11,17 IN	830.8	0.5	0.12
WW TC ON HTR 18,17 IN	839.7	0.5	0.77
WW TC ON HTR 19,17 IN	834.3	0.5	0.38
WW TC ON HTR 21,17 IN	833.3	0.4	0.30
WW TC ON HTR 22,17 IN	833.2	0.5	0.30
WW TC ON HTR 33,17 IN	907.7	0.7	5.80
WW TC ON HTR 37,17 IN	830.6	1.8	0.11
WW TC ON HTR 06,19 IN	836.6	0.6	0.54
WW TC AJ HTR 07,19 IN	833.9	0.5	0.35
WW TC OP HTR 07,19 IN	833.4	0.6	0.31
WW TC ON HTR 09,19 IN	831.1	0.4	0.14
WW TC ON HTR 14,19 IN	840.6	0.4	0.85
WW TC ON HTR 18,19 IN	837.7	0.5	0.63
WW TC ON HTR 27,19 IN	841.7	0.4	0.92
WW TC ON HTR 30,19 IN	850.8	0.4	1.60
WW TC ON HTR 34,19 IN	849.7	1.3	1.51
WW TC ON HTR 36,19 IN	831.9	0.7	0.20
WW TC ON HTR 37,19 IN	830.5	0.9	0.09
WW TC ON HTR 05,21 IN	833.9	0.5	0.35
WW TC ON HTR 06,21 IN	836.3	0.6	0.52
WW TC ON HTR 21,21 IN	834.9	0.4	0.42
WW TC ON HTR 24,21 IN	836.6	0.5	0.55
WW TC ON HTR 25,21 IN	835.1	0.5	0.44
WW TC ON HTR 27,21 IN	840.1	0.5	0.80
WW TC ON HTR 30,21 IN	850.4	0.5	1.57
WW TC ON HTR 33,21 IN	901.0	1.4	5.31
WW TC ON HTR 34,21 IN	838.6	1.1	0.70
WW TC ON HTR 04,23 IN	833.5	0.4	0.32
WW TC ON HTR 09,23 IN	831.7	0.4	0.19
WW TC ON HTR 14,23 IN	845.2	1.0	1.19
WW TC ON HTR 24,23 IN	835.9	0.2	0.50
WW TC ON HTR 28,23 IN	843.4	0.5	1.05
WW TC ON HTR 31,23 IN	882.4	0.5	3.93
WW TC ON ROD 01,25 IN	836.6	1.1	0.55
WW TC ON ROD 02,25 IN	831.8	0.3	0.19
WW TC ON ROD 05,25 IN	849.5	1.0	1.50
WW TC ON ROD 08,25 IN	831.8	0.4	0.19
WW TC ON ROD 14,25 IN	864.4	0.6	2.60
WW TC ON ROD 04,27 IN	836.8	0.2	0.56
WW TC ON ROD 07,27 IN	848.3	2.5	1.41
WW TC ON ROD 12,27 IN	843.3	1.4	1.04
WW TC ON ROD 16,27 IN	872.4	2.1	3.19
WW TC ON ROD 18,27 IN	852.0	0.5	1.69
WW TC ON ROD 03,29 IN	831.0	0.2	0.13

Test 10, run 133 (continued)

INSTRUMENT	20-SEC AVG	STD DEV	NORMALIZED TEMP
WW TC ON ROD 06,29 IN	844.4	0.4	1.12
WW TC ON ROD 10,29 IN	835.6	2.1	0.47
WW TC ON ROD 01,37 IN	838.3	1.1	0.67
WW TC ON ROD 02,37 IN	833.2	1.3	0.30
WW TC ON ROD 08,37 IN	835.1	0.9	0.44
WW TC ON ROD 14,37 IN	858.0	2.0	2.13
WW TC ON ROD 04,51 IN	843.5	0.6	1.06
WW TC ON ROD 07,51 IN	844.3	0.4	1.12
WW TC ON ROD 12,51 IN	847.9	1.8	1.38
WW TC ON ROD 16,51 IN	852.6	0.8	1.73
WW TC ON ROD 18,51 IN	843.9	2.9	1.08
WW TC ON ROD 03,63 IN	839.2	0.2	0.74
WW TC ON ROD 06,63 IN	849.2	0.4	1.48
WW TC ON ROD 10,63 IN	839.5	1.6	0.76
DUCT THERMOCOUPLES			
DUCT WALL TC,CH 38,19 IN(DEG F)	832.3	1.0	0.23
DUCT WALL TC,CH 53,19 IN	831.6	0.9	0.18
DUCT WALL TC,CH 28,21 IN	828.5	0.8	-.05
DUCT WALL TC,CH 43,21 IN	851.3	1.0	1.63
DUCT WALL TC,CH 44,21 IN	858.4	0.4	2.16
TEST SECTION HOUSING THERMOCOUPLES			
TS SHELL-BOT(DEG F)	830.2	0.5	
TS GUARD HTR-BOT	802.8	4.5	
TS HTR-BOT	752.2	0.5	
TS SHELL-LOW CTR	843.7	1.0	
TS GUARD HTR-LOW CTR	848.9	1.5	
TS HTR-LOW CTR	775.0	0.8	
TS SHELL-UP CTR	851.4	0.4	
TS GUARD HTR-UP CTR	868.0	5.4	
TS HTR-UP CTR	844.8	1.1	
TS SHELL-TOP	845.8	1.4	
TS GUARD HTR-TOP	856.3	4.1	
TS HTR-TOP	862.2	2.0	
REFERENCE BOX THERMOCOUPLES			
150 DEG REF BOX 1(DEG F)	148.1	1.9	
150 DEG REF BOX 2	148.3	0.9	
150 DEG REF BOX 3	151.7	1.0	
150 DEG REF BOX 4	149.7	1.9	
150 DEG REF BOX 5	147.8	0.6	
MISCELLANEOUS			
SOD PUMP SPEED(RPM)	485.5	30.6	
EXPANSION TANK LEVEL(% FULL)	75.4	0.4	

TEST SERIES 10(BUNDLE 3C); TEST 10 RUN 134 01/13/78 11 54 36

CONDITIONS:
TEST SECTION FLOW: 0.62 L/S (9.9 GPM)
TEST SECTION POWER
(1 ROD HEATED): 5.1 KW (9.6 KW/M/ROD)(2.9 KW/FT/ROD)

TEST SECTION INLET TEMPERATURE: 447 DEG C (837 DEG F)
TEST SECTION OUTLET TEMPERATURE: 455 DEG C (851 DEG F)

HEAT BALANCE:

HEAT INPUT FROM 31 FUEL PIN SIMULATORS: 5.1 KW
HEAT ABSORBED BY SODIUM=
FLOW X SP.HEAT X (TS OUT TEMP - TS IN TEMP) 5.4 KW
% OF INPUT HEAT ACCOUNTED FOR: 104.3 %

INSTRUMENT	20-SEC AVG	STD DEV
HEATER POWERS(KW)		
HTR POWER IN ROD 34	5.1	0.0
HTR POWER IN RODS 8,9,10	0.1	0.0
HTR POWER IN RODS 14,15,16	0.1	0.0
HTR POWER IN RODS 1,3,11,19	0.1	0.0
HTR POWER IN RODS 5,6,13,17	0.1	0.0
HTR POWER IN RODS 4,7,12,18	0.0	0.0
HTR POWER IN RODS 30,31	-0.0	0.0
HTR POWER IN RODS 24,25,27,28	-0.3	0.0
HTR POWER IN RODS 2,33	0.0	0.0
HTR POWER IN RODS 21,22,36,37	0.0	0.0
FLOWS		
TEST SECTION(TS) FLOW IN(GPM)	9.9	0.1
TS FLOW OUT(GPM)	9.9	0.1
TS BYPASS FLOW(GPM)	1.8	0.1
LOOP FLOW TOTAL(GPM)	10.0	0.2
RADIATOR AIR FLOW(CFM)	1.2	0.0
PRESSURES		
TS IN PRESS(PSIG)	12.9	0.1
TS OUT PRESS(PSIG)	6.0	0.0
PUMP OUT PRESS(PSIG)	8.1	0.1
TS LINE PRESS IN(PSIG)	11.8	0.1
EXP TANK ARGON PRESS(PSIG)	2.4	0.1
TS BYP LINE PRESS IN(PSIG)	13.0	0.1
TS BYP LINE PRESS OUT(PSIG)	9.5	0.1

Test 10, run 134 (continued)

INSTRUMENT	20-SEC AVG	STD DEV	NORMALIZED TEMP
LOOP THERMOCOUPLES			
TEST SECT INLET WELL(DEG F)	837.6	0.4	
TEST SECT OUTLET WELL(DEG F)	852.0	0.5	
PUMP IN PIPE WALL TC	843.5	4.1	
PUMP OUT PIPE WALL TC	821.0	1.3	
RAD IN PIPE WALL TC	843.6	0.5	
RAD OUT PIPE WALL TC	823.9	0.6	
HEATER INTERNAL THERMOCOUPLES			
HTR TC IN HTR 08,12AB IN(DEG F)	840.1	0.3	0.17
HTR TC IN HTR 13,12AB IN	838.1	0.4	0.03
HTR TC IN HTR 18,12AB IN	841.8	1.4	0.30
HTR TC IN HTR 22,12AB IN	821.1	1.8	****
HTR TC IN HTR 08,12BC IN	840.2	0.5	0.18
HTR TC IN HTR 13,12BC IN	837.5	0.4	-.00
HTR TC IN HTR 18,12BC IN	846.5	1.6	0.62
HTR TC IN HTR 22,12BC IN	836.1	0.9	-.10
HTR TC IN HTR 09,15AB IN	843.6	1.1	0.42
HTR TC IN HTR 10,15BC IN	835.3	0.6	-.16
HTR TC IN HTR 16,15BC IN	864.7	0.9	1.88
HTR TC IN HTR 25,15BC IN	835.1	0.8	-.17
HTR TC IN HTR 02,15.1 IN	840.7	0.4	0.21
HTR TC IN HTR 03,15.1 IN	838.7	0.4	0.08
HTR TC IN HTR 06,15.1 IN	840.1	0.4	0.18
HTR TC IN HTR 15,15.1 IN	838.4	0.4	0.06
HTR TC IN HTR 24,15.1 IN	78.8	0.4	****
HTR TC IN HTR 33,15.1 IN	871.1	0.4	2.33
HTR TC IN HTR 36,15.1 IN	838.2	0.7	0.05
HTR TC IN HTR 02,15.4 IN	841.6	0.6	0.28
HTR TC IN HTR 03,15.4 IN	839.3	0.7	0.12
HTR TC IN HTR 06,15.4 IN	841.5	0.4	0.27
HTR TC IN HTR 15,15.4 IN	837.3	0.5	-.02
HTR TC IN HTR 24,15.4 IN	423.1	0.4	****
HTR TC IN HTR 33,15.4 IN	871.3	0.4	2.34
HTR TC IN HTR 34,15.4 IN	943.3	12.4	7.34
HTR TC IN HTR 36,15.4 IN	839.0	1.1	0.10
HTR TC IN HTR 02,15.6 IN	841.1	0.4	0.24
HTR TC IN HTR 03,15.6 IN	839.7	0.4	0.15
HTR TC IN HTR 06,15.6 IN	841.9	1.4	0.30
HTR TC IN HTR 15,15.6 IN	837.3	0.4	-.02
HTR TC IN HTR 24,15.6 IN	835.2	0.4	-.17
HTR TC IN HTR 33,15.6 IN	873.2	4.1	2.47
HTR TC IN HTR 34,15.6 IN	884.5	8.5	3.25
HTR TC IN HTR 36,15.6 IN	837.4	0.4	-.01
HTR TC IN HTR 03,15.9 IN	838.4	0.8	0.06
HTR TC IN HTR 06,15.9 IN	841.8	0.3	0.29
HTR TC IN HTR 15,15.9 IN	837.3	0.4	-.02
HTR TC IN HTR 24,15.9 IN	835.7	0.3	-.13
HTR TC IN HTR 33,15.9 IN	869.6	0.7	2.22
HTR TC IN HTR 34,15.9 IN	911.5	0.4	5.13
HTR TC IN HTR 36,15.9 IN	837.4	0.9	-.01

Test 10, run 134 (continued)

INSTRUMENT	20-SEC AVG	STD DEV	NORMALIZED TEMP
HTR TC IN HTR 04,16.1 IN	836.7	0.3	-.06
HTR TC IN HTR 05,16.1 IN	839.6	0.4	0.14
HTR TC IN HTR 07,16.1 IN	841.2	0.4	0.25
HTR TC IN HTR 21,16.1 IN	837.8	0.4	0.01
HTR TC IN HTR 27,16.1 IN	837.1	0.9	-.03
HTR TC IN HTR 04,16.4 IN	837.6	0.3	0.00
HTR TC IN HTR 05,16.4 IN	838.2	1.9	0.05
HTR TC IN HTR 07,16.4 IN	840.4	0.4	0.19
HTR TC IN HTR 21,16.4 IN	837.9	0.5	0.02
HTR TC IN HTR 27,16.4 IN	837.4	0.8	-.01
HTR TC IN HTR 04,16.6 IN	839.1	0.3	0.10
HTR TC IN HTR 05,16.6 IN	839.7	0.5	0.15
HTR TC IN HTR 07,16.6 IN	842.6	0.6	0.35
HTR TC IN HTR 21,16.6 IN	836.7	0.3	-.06
HTR TC IN HTR 27,16.6 IN	836.4	1.0	-.08
HTR TC IN HTR 04,16.9 IN	838.5	0.4	0.06
HTR TC IN HTR 07,16.9 IN	841.5	0.6	0.27
HTR TC IN HTR 21,16.9 IN	834.6	0.7	-.20
HTR TC IN HTR 27,16.9 IN	836.5	0.4	-.07
HTR TC IN HTR 11,18AB IN	836.6	0.4	-.06
HTR TC IN HTR 12,18AB IN	836.6	0.3	-.06
HTR TC IN HTR 14,18AB IN	851.2	0.7	0.95
HTR TC IN HTR 30,18AB IN	854.2	7.4	1.15
HTR TC IN HTR 11,18BC IN	837.2	0.4	-.03
HTR TC IN HTR 12,18BC IN	836.7	0.3	-.06
HTR TC IN HTR 14,18BC IN	849.1	0.7	0.80
HTR TC IN HTR 17,18BC IN	850.2	0.4	0.88
HTR TC IN HTR 30,18BC IN	853.1	7.3	1.07
WIRE WRAP THERMOCOUPLES			
WW TC ON HTR 12,-1 IN(DEG F)	839.6	3.9	0.14
WW TC ON HTR 16,-1 IN	839.9	0.4	0.16
WW TC ON HTR 12,01 IN	838.2	0.5	0.05
WW TC ON HTR 16,09 IN	846.1	0.5	0.59
WW TC ON HTR 04,11 IN	841.2	0.5	0.25
WW TC ON HTR 05,11 IN	839.4	0.3	0.13
WW TC ON HTR 13,11 IN	839.1	0.3	0.11
WW TC ON HTR 17,11 IN	878.2	0.3	2.82
WW TC ON HTR 28,11 IN	841.5	0.4	0.27
WW TC ON HTR 31,11 IN	852.7	0.4	1.05
WW TC ON HTR 03,13 IN	836.2	0.6	-.09
WW TC ON HTR 13,13 IN	839.6	0.6	0.14
WW TC ON HTR 15,13 IN	848.4	0.4	0.75
WW TC ON HTR 17,13 IN	889.1	0.4	3.58
WW TC ON HTR 22,13 IN	840.8	0.3	0.23
WW TC ON HTR 01,15 IN	844.6	0.4	0.49
WW TC ON HTR 03,15 IN	840.3	0.4	0.19
WW TC ON HTR 08,15 IN	838.5	1.2	0.06
WW TC ON HTR 10,15 IN	839.1	0.3	0.11
WW TC ON HTR 15,15 IN	848.8	0.4	0.78
WW TC ON HTR 19,15 IN	843.9	0.4	0.44

Test 10, run 134 (continued)

INSTRUMENT	20-SEC AVG	STD DEV	NORMALIZED TEMP
WW TC ON HTR 25.15 IN	840.8	0.3	0.22
WW TC ON HTR 36.15 IN	844.6	1.1	0.49
WW TC ON HTR 01.17 IN	840.7	0.5	0.21
WW TC AJ HTR 02.17 IN	842.2	0.6	0.32
WW TC OP HTR 02.17 IN	840.3	0.4	0.19
WW TC ON HTR 08.17 IN	839.6	0.5	0.14
WW TC ON HTR 10.17 IN	839.2	0.3	0.12
WW TC ON HTR 11.17 IN	839.7	0.5	0.15
WW TC ON HTR 18.17 IN	858.9	0.4	1.48
WW TC ON HTR 19.17 IN	842.9	0.4	0.37
WW TC ON HTR 21.17 IN	841.3	0.4	0.26
WW TC ON HTR 22.17 IN	841.0	0.4	0.24
WW TC ON HTR 33.17 IN	881.8	0.4	3.07
WW TC ON HTR 37.17 IN	839.3	1.5	0.12
WW TC ON HTR 06.19 IN	844.0	0.7	0.45
WW TC AJ HTR 07.19 IN	844.6	0.5	0.49
WW TC OP HTR 07.19 IN	843.6	0.7	0.42
WW TC ON HTR 09.19 IN	840.1	0.3	0.17
WW TC ON HTR 14.19 IN	845.5	0.5	0.55
WW TC ON HTR 18.19 IN	852.7	0.4	1.05
WW TC ON HTR 27.19 IN	846.6	0.3	0.63
WW TC ON HTR 30.19 IN	852.3	0.4	1.02
WW TC ON HTR 34.19 IN	902.7	0.9	4.52
WW TC ON HTR 36.19 IN	842.2	0.9	0.32
WW TC ON HTR 37.19 IN	839.4	0.8	0.12
WW TC ON HTR 05.21 IN	841.5	0.4	0.27
WW TC ON HTR 06.21 IN	844.9	0.5	0.51
WW TC ON HTR 21.21 IN	842.8	0.4	0.36
WW TC ON HTR 24.21 IN	844.7	0.4	0.50
WW TC ON HTR 25.21 IN	843.0	0.5	0.38
WW TC ON HTR 27.21 IN	845.7	0.5	0.56
WW TC ON HTR 30.21 IN	851.7	0.5	0.98
WW TC ON HTR 33.21 IN	902.1	1.4	4.48
WW TC ON HTR 34.21 IN	876.1	1.0	2.67
WW TC ON HTR 04.23 IN	841.7	0.3	0.29
WW TC ON HTR 09.23 IN	840.8	0.3	0.23
WW TC ON HTR 14.23 IN	848.6	0.5	0.77
WW TC ON HTR 24.23 IN	844.2	0.2	0.46
WW TC ON HTR 28.23 IN	847.4	0.4	0.68
WW TC ON HTR 31.23 IN	883.7	0.3	3.20
WW TC ON ROD 01.25 IN	844.2	0.1	0.46
WW TC ON ROD 02.25 IN	844.2	0.1	0.46
WW TC ON ROD 05.25 IN	852.2	0.4	1.01
WW TC ON ROD 08.25 IN	841.7	0.1	0.29
WW TC ON ROD 14.25 IN	862.3	0.2	1.72
WW TC ON ROD 04.27 IN	842.6	0.2	0.35
WW TC ON ROD 07.27 IN	857.9	1.1	1.41
WW TC ON ROD 12.27 IN	848.6	0.5	0.76
WW TC ON ROD 16.27 IN	879.7	0.2	2.93
WW TC ON ROD 18.27 IN	873.8	0.3	2.52
WW TC ON ROD 03.29 IN	839.2	0.2	0.11
WW TC ON ROD 06.29 IN	849.2	0.3	0.81

Test 10, run 134 (continued)

INSTRUMENT	20-SEC AVG	STD DEV	NORMALIZED TEMP
WW TC ON ROD 10,29 IN	844.1	1.1	0.46
WW TC ON ROD 01,37 IN	848.3	0.1	0.75
WW TC ON ROD 02,37 IN	843.4	0.2	0.40
WW TC ON ROD 08,37 IN	844.9	0.3	0.51
WW TC ON ROD 14,37 IN	860.9	0.4	1.62
WW TC ON ROD 04,51 IN	849.1	0.1	0.80
WW TC ON ROD 07,51 IN	855.2	0.6	1.22
WW TC ON ROD 12,51 IN	853.2	0.2	1.09
WW TC ON ROD 16,51 IN	863.3	0.2	1.78
WW TC ON ROD 18,51 IN	855.8	0.1	1.26
WW TC ON ROD 03,63 IN	847.4	0.3	0.68
WW TC ON ROD 06,63 IN	858.3	0.0	1.44
WW TC ON ROD 10,63 IN	847.5	0.3	0.69
DUCT THERMOCOUPLES			
DUCT WALL TC,CH 38,19 IN(DEG F)	839.3	0.8	0.12
DUCT WALL TC,CH 53,19 IN	850.0	0.2	0.86
DUCT WALL TC,CH 28,21 IN	837.5	0.2	-.00
DUCT WALL TC,CH 43,21 IN	852.7	0.9	1.05
DUCT WALL TC,CH 44,21 IN	858.5	0.5	1.46
TEST SECTION HOUSING THERMOCOUPLES			
TS SHELL-BOT(DEG F)	838.6	0.4	
TS GUARD HTR-BOT	806.1	0.4	
TS HTR-BOT	752.4	0.6	
TS SHELL-LOW CTR	856.8	0.4	
TS GUARD HTR-LOW CTR	850.3	1.1	
TS HTR-LOW CTR	773.6	0.7	
TS SHELL-UP CTR	860.6	0.4	
TS GUARD HTR-UP CTR	868.7	0.8	
TS HTR-UP CTR	841.8	0.8	
TS SHELL-TOP	854.0	1.3	
TS GUARD HTR-TOP	859.1	1.8	
TS HTR-TOP	859.0	1.5	
REFERENCE BOX THERMOCOUPLES			
150 DEG REF BOX 1(DEG F)	147.9	1.1	
150 DEG REF BOX 2	149.4	1.6	
150 DEG REF BOX 3	151.6	0.9	
150 DEG REF BOX 4	149.5	0.4	
150 DEG REF BOX 5	147.4	0.4	
MISCELLANEOUS			
SOD PUMP SPEED(RPM)	496.3	18.9	
EXPANSION TANK LEVEL(% FULL)	75.1	0.2	

TEST SERIES 10(BUNDLE 3C); TEST 10 RUN 136 01/18/78 12 45 24

CONDITIONS:

TEST SECTION FLOW: 0.62 L/S (9.7 GPM)

TEST SECTION POWER
(1 ROD HEATED): 5.0 KW (9.5 KW/M/ROD)(2.9 KW/FT/ROD)

TEST SECTION INLET TEMPERATURE: 442 DEG C (828 DEG F)

TEST SECTION OUTLET TEMPERATURE: 450 DEG C (842 DEG F)

HEAT BALANCE:

HEAT INPUT FROM 31 FUEL PIN SIMULATORS: 5.0 KW

HEAT ABSORBED BY SODIUM=
FLOW X SP.HEAT X (TS OUT TEMP - TS IN TEMP) 5.0 KW

% OF INPUT HEAT ACCOUNTED FOR: 99.3 %

INSTRUMENT	20-SEC AVG	STD DEV
HEATER POWERS(KW)		
HTR POWER IN ROD 36	5.0	0.0
HTR POWER IN RODS 8,9,10	0.1	0.0
HTR POWER IN RODS 14,15,16	0.1	0.0
HTR POWER IN RODS 1,3,11,19	0.0	0.0
HTR POWER IN RODS 5,6,13,17	0.1	0.0
HTR POWER IN RODS 4,7,12,18	0.0	0.0
HTR POWER IN RODS 30,31	-0.0	0.0
HTR POWER IN RODS 24,25,27,28	-0.3	0.0
HTR POWER IN RODS 33,34	0.0	0.0
HTR POWER IN RODS 2,21,22,37	0.0	0.0
FLOWS		
TEST SECTION(TS) FLOW IN(GPM)	9.7	0.1
TS FLOW OUT(GPM)	9.8	0.1
TS BYPASS FLOW(GPM)	1.3	0.1
LOOP FLOW TOTAL(GPM)	9.9	0.2
RADIATOR AIR FLOW(CFM)	1.1	0.0
PRESSURES		
TS IN PRESS(PSIG)	12.7	0.1
TS OUT PRESS(PSIG)	6.0	0.0
PUMP OUT PRESS(PSIG)	7.9	0.1
TS LINE PRESS IN(PSIG)	11.6	0.1
EXP TANK ARGON PRESS(PSIG)	2.4	0.1
TS BYP LINE PRESS IN(PSIG)	12.8	0.1
TS BYP LINE PRESS OUT(PSIG)	9.4	0.1

Test 10, run 136 (continued)

INSTRUMENT	20-SEC AVG	STD DEV	NORMALIZED TEMP
LOOP THERMOCOUPLES			
TEST SECT INLET WELL(DEG F)	828.5	0.4	
TEST SECT OUTLET WELL(DEG F)	842.1	0.6	
PUMP IN PIPE WALL TC	835.5	4.4	
PUMP OUT PIPE WALL TC	812.8	1.2	
RAD IN PIPE WALL TC	838.4	0.2	
RAD OUT PIPE WALL TC	813.6	0.4	
HEATER INTERNAL THERMOCOUPLES			
HTR TC IN HTR 08,12AB IN(DEG F)	835.4	0.7	0.50
HTR TC IN HTR 13,12AB IN	828.4	0.5	-.01
HTR TC IN HTR 18,12AB IN	875.6	1.1	3.46
HTR TC IN HTR 22,12AB IN	825.2	3.3	-.24
HTR TC IN HTR 08,12BC IN	834.9	0.5	0.47
HTR TC IN HTR 13,12BC IN	828.1	0.8	-.03
HTR TC IN HTR 18,12BC IN	876.2	0.7	3.50
HTR TC IN HTR 22,12BC IN	827.2	1.0	-.10
HTR TC IN HTR 09,15AB IN	823.0	8.4	-.40
HTR TC IN HTR 10,15BC IN	827.0	0.6	-.11
HTR TC IN HTR 16,15BC IN	838.5	1.0	0.73
HTR TC IN HTR 25,15BC IN	825.8	1.3	-.20
HTR TC IN HTR 02,15.1 IN	833.3	0.5	0.35
HTR TC IN HTR 03,15.1 IN	829.9	0.4	0.10
HTR TC IN HTR 06,15.1 IN	831.6	0.4	0.23
HTR TC IN HTR 15,15.1 IN	827.6	0.3	-.07
HTR TC IN HTR 24,15.1 IN	826.5	0.4	-.14
HTR TC IN HTR 33,15.1 IN	841.4	0.4	0.95
HTR TC IN HTR 36,15.1 IN	919.3	0.5	6.68
HTR TC IN HTR 02,15.4 IN	832.8	0.8	0.32
HTR TC IN HTR 03,15.4 IN	831.3	0.4	0.20
HTR TC IN HTR 06,15.4 IN	831.2	0.7	0.20
HTR TC IN HTR 15,15.4 IN	826.8	0.4	-.13
HTR TC IN HTR 24,15.4 IN	826.7	0.6	-.13
HTR TC IN HTR 33,15.4 IN	841.2	0.4	0.93
HTR TC IN HTR 34,15.4 IN	770.8	124.3	****
HTR TC IN HTR 36,15.4 IN	916.1	1.3	6.44
HTR TC IN HTR 02,15.6 IN	831.8	0.2	0.24
HTR TC IN HTR 03,15.6 IN	830.9	0.4	0.17
HTR TC IN HTR 06,15.6 IN	831.2	0.4	0.20
HTR TC IN HTR 15,15.6 IN	826.9	0.3	-.12
HTR TC IN HTR 24,15.6 IN	826.6	0.6	-.14
HTR TC IN HTR 33,15.6 IN	838.6	0.4	0.75
HTR TC IN HTR 34,15.6 IN	888.1	57.2	4.38
HTR TC IN HTR 36,15.6 IN	905.9	0.6	5.69
HTR TC IN HTR 03,15.9 IN	828.8	2.0	0.02
HTR TC IN HTR 06,15.9 IN	831.6	1.0	0.22
HTR TC IN HTR 15,15.9 IN	826.6	0.4	-.14
HTR TC IN HTR 24,15.9 IN	826.5	0.4	-.15
HTR TC IN HTR 33,15.9 IN	838.0	0.5	0.70
HTR TC IN HTR 34,15.9 IN	835.2	32.9	0.49
HTR TC IN HTR 36,15.9 IN	904.4	1.7	5.58

Test 10, run 136 (continued)

INSTRUMENT	20-SEC AVG	STD DEV	NORMALIZED TEMP
HTR TC IN HTR 04,16.1 IN	827.8	0.3	-.06
HTR TC IN HTR 05,16.1 IN	830.2	0.3	0.12
HTR TC IN HTR 07,16.1 IN	835.3	0.4	0.50
HTR TC IN HTR 21,16.1 IN	828.3	0.7	-.02
HTR TC IN HTR 27,16.1 IN	827.8	1.2	-.05
HTR TC IN HTR 04,16.4 IN	828.2	0.4	-.02
HTR TC IN HTR 05,16.4 IN	830.9	0.7	0.18
HTR TC IN HTR 07,16.4 IN	834.4	0.8	0.43
HTR TC IN HTR 21,16.4 IN	829.0	1.1	0.04
HTR TC IN HTR 27,16.4 IN	827.6	1.2	-.07
HTR TC IN HTR 04,16.6 IN	829.8	0.4	0.10
HTR TC IN HTR 05,16.6 IN	830.0	0.6	0.11
HTR TC IN HTR 07,16.6 IN	836.2	0.4	0.57
HTR TC IN HTR 21,16.6 IN	828.1	0.8	-.03
HTR TC IN HTR 27,16.6 IN	826.6	0.7	-.14
HTR TC IN HTR 04,16.9 IN	829.3	0.3	0.06
HTR TC IN HTR 07,16.9 IN	835.7	0.4	0.53
HTR TC IN HTR 21,16.9 IN	827.0	1.2	-.11
HTR TC IN HTR 27,16.9 IN	826.3	0.7	-.16
HTR TC IN HTR 11,18AB IN	827.5	0.3	-.07
HTR TC IN HTR 12,18AB IN	826.7	0.8	-.13
HTR TC IN HTR 14,18AB IN	844.5	9.8	1.18
HTR TC IN HTR 30,18AB IN	830.9	7.3	0.17
HTR TC IN HTR 11,18BC IN	827.6	0.3	-.07
HTR TC IN HTR 12,18BC IN	827.0	0.8	-.11
HTR TC IN HTR 14,18BC IN	826.7	6.2	-.14
HTR TC IN HTR 17,18BC IN	837.3	0.4	0.65
HTR TC IN HTR 30,18BC IN	828.9	7.0	0.03
WIRE WRAP THERMOCOUPLES			
WW TC ON HTR 12,-1 IN(DEG F)	831.5	2.7	0.22
WW TC ON HTR 16,-1 IN	828.9	0.6	0.03
WW TC ON HTR 12,01 IN	831.5	13.1	0.22
WW TC ON HTR 16,09 IN	831.4	0.4	0.21
WW TC ON HTR 04,11 IN	831.8	0.3	0.24
WW TC ON HTR 05,11 IN	830.1	0.2	0.12
WW TC ON HTR 13,11 IN	830.2	0.5	0.12
WW TC ON HTR 17,11 IN	845.7	0.5	1.26
WW TC ON HTR 28,11 IN	831.5	0.4	0.22
WW TC ON HTR 31,11 IN	833.1	0.5	0.34
WW TC ON HTR 03,13 IN	827.7	0.8	-.06
WW TC ON HTR 13,13 IN	830.5	0.4	0.15
WW TC ON HTR 15,13 IN	831.6	0.4	0.23
WW TC ON HTR 17,13 IN	843.8	0.4	1.13
WW TC ON HTR 22,13 IN	831.7	0.3	0.23
WW TC ON HTR 01,15 IN	837.8	0.4	0.68
WW TC ON HTR 03,15 IN	831.1	0.4	0.19
WW TC ON HTR 08,15 IN	833.3	2.2	0.36
WW TC ON HTR 10,15 IN	829.7	0.4	0.09
WW TC ON HTR 15,15 IN	832.4	0.5	0.29

Test 10, run 136 (continued)

INSTRUMENT	20-SEC AVG	STD DEV	NORMALIZED TEMP
WW TC ON HTR 19,15 IN	847.2	0.5	1.38
WW TC ON HTR 25,15 IN	831.1	0.3	0.19
WW TC ON HTR 36,15 IN	905.8	1.2	5.68
WW TC ON HTR 01,17 IN	830.8	0.5	0.17
WW TC AJ HTR 02,17 IN	833.9	1.0	0.40
WW TC OP HTR 02,17 IN	833.5	0.8	0.37
WW TC ON HTR 08,17 IN	835.8	1.1	0.54
WW TC ON HTR 10,17 IN	829.8	0.4	0.10
WW TC ON HTR 11,17 IN	830.1	0.6	0.12
WW TC ON HTR 18,17 IN	853.6	0.5	1.84
WW TC ON HTR 19,17 IN	844.4	0.5	1.17
WW TC ON HTR 21,17 IN	832.0	0.4	0.26
WW TC ON HTR 22,17 IN	831.8	0.3	0.24
WW TC ON HTR 33,17 IN	847.5	0.4	1.40
WW TC ON HTR 37,17 IN	844.3	1.2	1.16
WW TC ON HTR 06,19 IN	832.6	0.8	0.30
WW TC AJ HTR 07,19 IN	841.1	0.7	0.93
WW TC OP HTR 07,19 IN	838.0	0.5	0.70
WW TC ON HTR 09,19 IN	831.4	0.4	0.21
WW TC ON HTR 14,19 IN	830.9	0.7	0.18
WW TC ON HTR 18,19 IN	866.8	0.5	2.81
WW TC ON HTR 27,19 IN	834.9	0.4	0.47
WW TC ON HTR 30,19 IN	833.9	0.5	0.39
WW TC ON HTR 34,19 IN	860.5	1.4	2.35
WW TC ON HTR 36,19 IN	892.6	0.8	4.71
WW TC ON HTR 37,19 IN	836.9	0.7	0.62
WW TC ON HTR 05,21 IN	831.5	0.4	0.22
WW TC ON HTR 06,21 IN	834.9	0.5	0.47
WW TC ON HTR 21,21 IN	834.2	0.5	0.42
WW TC ON HTR 24,21 IN	835.1	0.3	0.48
WW TC ON HTR 25,21 IN	833.2	0.5	0.35
WW TC ON HTR 27,21 IN	834.3	0.4	0.43
WW TC ON HTR 30,21 IN	833.8	0.5	0.39
WW TC ON HTR 33,21 IN	856.1	1.2	2.03
WW TC ON HTR 34,21 IN	877.1	1.1	3.57
WW TC ON HTR 04,23 IN	832.8	0.6	0.32
WW TC ON HTR 09,23 IN	833.8	0.4	0.39
WW TC ON HTR 14,23 IN	832.7	0.9	0.31
WW TC ON HTR 24,23 IN	834.3	0.2	0.43
WW TC ON HTR 28,23 IN	832.2	0.5	0.27
WW TC ON HTR 31,23 IN	851.8	0.6	1.71
WW TC ON ROD 01,25 IN	833.7	0.4	0.38
WW TC ON ROD 02,25 IN	846.6	0.3	1.33
WW TC ON ROD 05,25 IN	837.8	0.4	0.69
WW TC ON ROD 08,25 IN	847.5	0.2	1.40
WW TC ON ROD 14,25 IN	841.7	0.2	0.97
WW TC ON ROD 04,27 IN	831.6	0.3	0.23
WW TC ON ROD 07,27 IN	846.8	1.2	1.34
WW TC ON ROD 12,27 IN	836.2	1.0	0.57
WW TC ON ROD 16,27 IN	855.2	0.6	1.96
WW TC ON ROD 18,27 IN	867.4	0.2	2.86
WW TC ON ROD 03,29 IN	830.1	0.4	0.12

Test 10, run 136 (continued)

INSTRUMENT	20-SEC AVG	STD DEV	NORMALIZED TEMP
WW TC ON ROD 06,29 IN	835.8	0.3	0.54
WW TC ON ROD 10,29 IN	835.3	1.0	0.50
WW TC ON ROD 01,37 IN	840.0	0.2	0.85
WW TC ON ROD 02,37 IN	844.0	0.3	1.14
WW TC ON ROD 08,37 IN	843.7	0.4	1.12
WW TC ON ROD 14,37 IN	843.2	0.4	1.08
WW TC ON ROD 04,51 IN	836.6	0.3	0.60
WW TC ON ROD 07,51 IN	850.6	0.6	1.62
WW TC ON ROD 12,51 IN	840.7	0.4	0.90
WW TC ON ROD 16,51 IN	850.8	0.1	1.64
WW TC ON ROD 18,51 IN	853.9	0.4	1.87
WW TC ON ROD 03,63 IN	838.2	0.3	0.72
WW TC ON ROD 06,63 IN	847.4	0.3	1.39
WW TC ON ROD 10,63 IN	838.3	0.3	0.72
DUCT THERMOCOUPLES			
DUCT WALL TC,CH 38,19 IN(DEG F)	829.0	0.9	0.04
DUCT WALL TC,CH 53,19 IN	883.1	0.2	4.01
DUCT WALL TC,CH 28,21 IN	831.0	0.3	0.18
DUCT WALL TC,CH 43,21 IN	834.0	0.9	0.41
DUCT WALL TC,CH 44,21 IN	837.3	0.6	0.64
TEST SECTION HOUSING THERMOCOUPLES			
TS SHELL-BOT(DEG F)	829.9	0.6	
TS GUARD HTR-BOT	802.0	0.4	
TS HTR-BOT	751.6	0.5	
TS SHELL-LOW CTR	840.8	0.2	
TS GUARD HTR-LOW CTR	847.5	0.9	
TS HTR-LOW CTR	774.5	0.8	
TS SHELL-UP CTR	850.0	0.4	
TS GUARD HTR-UP CTR	866.7	0.9	
TS HTR-UP CTR	844.5	0.9	
TS SHELL-TOP	843.1	0.9	
TS GUARD HTR-TOP	854.2	1.5	
TS HTR-TOP	861.1	1.3	
REFERENCE BOX THERMOCOUPLES			
150 DEG REF BOX 1(DEG F)	148.2	1.2	
150 DEG REF BOX 2	149.1	0.8	
150 DEG REF BOX 3	151.5	0.7	
150 DEG REF BOX 4	149.5	0.5	
150 DEG REF BOX 5	146.7	0.4	
MISCELLANEOUS			
SOD PUMP SPEED(RPM)	484.5	4.7	
EXPANSION TANK LEVEL(% FULL)	75.5	0.2	

TEST SERIES 10(BUNDLE 3C); TEST 10 RUN 137 01/18/78 13 6 27

CONDITIONS:

TEST SECTION FLOW: 0.62 L/S (9.7 GPM)

TEST SECTION POWER
(1 ROD HEATED): 4.9 KW (9.2 KW/M/ROD)(2.8 KW/FT/ROD)

TEST SECTION INLET TEMPERATURE: 442 DEG C (827 DEG F)

TEST SECTION OUTLET TEMPERATURE: 449 DEG C (840 DEG F)

HEAT BALANCE:

HEAT INPUT FROM 31 FUEL PIN SIMULATORS: 4.9 KW

HEAT ABSORBED BY SODIUM=
FLOW X SP.HEAT X (TS OUT TEMP - TS IN TEMP) 4.9 KW

% OF INPUT HEAT ACCOUNTED FOR: 99.3 %

INSTRUMENT	20-SEC AVG	STD DEV
HEATER POWERS(KW)		
HTR POWER IN ROD 37	4.9	0.0
HTR POWER IN RODS 8,9,10	0.1	0.0
HTR POWER IN RODS 14,15,16	0.0	0.0
HTR POWER IN RODS 1,3,11,19	0.0	0.0
HTR POWER IN RODS 5,6,13,17	0.1	0.0
HTR POWER IN RODS 4,7,12,18	0.0	0.0
HTR POWER IN RODS 30,31	-0.0	0.0
HTR POWER IN RODS 24,25,27,28	-0.3	0.0
HTR POWER IN RODS 33,34	-0.0	0.0
HTR POWER IN RODS 2,21,22,36	0.0	0.0
FLOWS		
TEST SECTION(TS) FLOW IN(GPM)	9.7	0.1
TS FLOW OUT(GPM)	9.8	0.1
TS BYPASS FLOW(GPM)	1.3	0.1
LOOP FLOW TOTAL(GPM)	9.9	0.2
RADIATOR AIR FLOW(CFM)	1.1	0.0
PRESSURES		
TS IN PRESS(PSIG)	12.7	0.1
TS OUT PRESS(PSIG)	5.9	0.0
PUMP OUT PRESS(PSIG)	7.9	0.1
TS LINE PRESS IN(PSIG)	11.7	0.1
EXP TANK ARGON PRESS(PSIG)	2.4	0.1
TS BYP LINE PRESS IN(PSIG)	12.8	0.1
TS BYP LINE PRESS OUT(PSIG)	9.4	0.1

Test 10, run 137 (continued)

INSTRUMENT	20-SEC AVG	STD DEV	NORMALIZED TEMP
LOOP THERMOCOUPLES			
TEST SECT INLET WELL(DEG F)	827.6	0.3	
TEST SECT OUTLET WELL(DEG F)	840.8	0.3	
PUMP IN PIPE WALL TC	834.4	4.3	
PUMP OUT PIPE WALL TC	811.8	1.3	
RAD IN PIPE WALL TC	837.6	0.1	
RAD OUT PIPE WALL TC	812.4	0.7	
HEATER INTERNAL THERMOCOUPLES			
HTR TC IN HTR 08,12AB IN(DEG F)	844.6	0.6	1.29
HTR TC IN HTR 13,12AB IN	827.5	0.4	-.01
HTR TC IN HTR 18,12AB IN	850.2	0.6	1.71
HTR TC IN HTR 22,12AB IN	799.6	3.8	****
HTR TC IN HTR 08,12BC IN	845.2	1.5	1.33
HTR TC IN HTR 13,12BC IN	827.0	0.5	-.04
HTR TC IN HTR 18,12BC IN	849.2	0.2	1.63
HTR TC IN HTR 22,12BC IN	826.7	1.2	-.07
HTR TC IN HTR 09,15AB IN	821.3	8.6	-.47
HTR TC IN HTR 10,15BC IN	825.7	0.7	-.14
HTR TC IN HTR 16,15BC IN	829.7	0.9	0.16
HTR TC IN HTR 25,15BC IN	824.8	0.8	-.21
HTR TC IN HTR 02,15.1 IN	834.5	0.5	0.52
HTR TC IN HTR 03,15.1 IN	829.9	0.4	0.18
HTR TC IN HTR 06,15.1 IN	830.0	0.3	0.18
HTR TC IN HTR 15,15.1 IN	826.1	0.4	-.11
HTR TC IN HTR 24,15.1 IN	825.6	0.4	-.15
HTR TC IN HTR 33,15.1 IN	831.9	0.3	0.32
HTR TC IN HTR 36,15.1 IN	868.9	0.9	3.12
HTR TC IN HTR 02,15.4 IN	833.3	0.4	0.43
HTR TC IN HTR 03,15.4 IN	830.9	0.2	0.25
HTR TC IN HTR 06,15.4 IN	830.7	0.4	0.24
HTR TC IN HTR 15,15.4 IN	825.7	0.4	-.14
HTR TC IN HTR 24,15.4 IN	825.8	0.4	-.14
HTR TC IN HTR 33,15.4 IN	832.2	0.4	0.35
HTR TC IN HTR 34,15.4 IN	916.2	49.6	6.69
HTR TC IN HTR 36,15.4 IN	866.7	0.9	2.96
HTR TC IN HTR 02,15.6 IN	832.1	0.4	0.34
HTR TC IN HTR 03,15.6 IN	830.3	0.5	0.21
HTR TC IN HTR 06,15.6 IN	831.1	0.7	0.27
HTR TC IN HTR 15,15.6 IN	825.8	0.3	-.13
HTR TC IN HTR 24,15.6 IN	825.9	0.4	-.13
HTR TC IN HTR 33,15.6 IN	831.3	0.4	0.28
HTR TC IN HTR 34,15.6 IN	784.9	18.0	****
HTR TC IN HTR 36,15.6 IN	872.3	0.8	3.38
HTR TC IN HTR 03,15.9 IN	829.0	0.5	0.11
HTR TC IN HTR 06,15.9 IN	831.0	0.2	0.26
HTR TC IN HTR 15,15.9 IN	825.6	0.4	-.15
HTR TC IN HTR 24,15.9 IN	826.0	0.1	-.12
HTR TC IN HTR 33,15.9 IN	830.0	0.3	0.18
HTR TC IN HTR 34,15.9 IN	844.2	1.0	1.25

Test 10, run 137 (continued)

INSTRUMENT	20-SEC AVG	STD DEV	NORMALIZED TEMP
HTR TC IN HTR 36,15.9 IN	872.6	2.2	3.40
HTR TC IN HTR 04,16.1 IN	827.1	0.4	-.04
HTR TC IN HTR 05,16.1 IN	829.0	0.4	0.11
HTR TC IN HTR 07,16.1 IN	836.1	0.8	0.65
HTR TC IN HTR 21,16.1 IN	830.2	0.6	0.20
HTR TC IN HTR 27,16.1 IN	826.4	1.0	-.09
HTR TC IN HTR 04,16.4 IN	827.4	0.4	-.01
HTR TC IN HTR 05,16.4 IN	829.3	0.1	0.13
HTR TC IN HTR 07,16.4 IN	835.9	0.8	0.62
HTR TC IN HTR 21,16.4 IN	829.6	0.4	0.15
HTR TC IN HTR 27,16.4 IN	826.5	0.7	-.08
HTR TC IN HTR 04,16.6 IN	829.3	0.3	0.13
HTR TC IN HTR 05,16.6 IN	829.1	0.3	0.12
HTR TC IN HTR 07,16.6 IN	835.5	0.4	0.60
HTR TC IN HTR 21,16.6 IN	828.8	1.1	0.09
HTR TC IN HTR 27,16.6 IN	825.7	0.6	-.14
HTR TC IN HTR 04,16.9 IN	828.4	0.3	0.06
HTR TC IN HTR 07,16.9 IN	835.9	0.2	0.62
HTR TC IN HTR 21,16.9 IN	826.8	1.0	-.06
HTR TC IN HTR 27,16.9 IN	825.9	0.2	-.13
HTR TC IN HTR 11,18AB IN	826.8	0.4	-.06
HTR TC IN HTR 12,18AB IN	826.2	0.5	-.10
HTR TC IN HTR 14,18AB IN	842.9	9.8	1.16
HTR TC IN HTR 30,18AB IN	832.2	7.2	0.35
HTR TC IN HTR 11,18BC IN	826.9	0.4	-.05
HTR TC IN HTR 12,18BC IN	825.8	0.3	-.13
HTR TC IN HTR 14,18BC IN	817.6	2.6	-.76
HTR TC IN HTR 17,18BC IN	832.0	0.4	0.34
HTR TC IN HTR 30,18BC IN	829.8	7.3	0.17
WIRE WRAP THERMOCOUPLES			
WW TC ON HTR 12,-1 IN(DEG F)	829.5	4.0	0.15
WW TC ON HTR 16,-1 IN	829.3	0.3	0.13
WW TC ON HTR 12,01 IN	829.4	11.3	0.14
WW TC ON HTR 16,09 IN	830.1	0.5	0.19
WW TC ON HTR 04,11 IN	830.9	0.5	0.25
WW TC ON HTR 05,11 IN	829.2	0.2	0.12
WW TC ON HTR 13,11 IN	828.9	0.4	0.10
WW TC ON HTR 17,11 IN	835.8	0.3	0.62
WW TC ON HTR 28,11 IN	831.0	0.2	0.25
WW TC ON HTR 31,11 IN	829.1	0.4	0.11
WW TC ON HTR 03,13 IN	827.4	0.8	-.01
WW TC ON HTR 13,13 IN	829.0	0.4	0.11
WW TC ON HTR 15,13 IN	829.3	0.4	0.13
WW TC ON HTR 17,13 IN	834.4	0.4	0.51
WW TC ON HTR 22,13 IN	831.4	0.4	0.29
WW TC ON HTR 01,15 IN	836.7	0.4	0.69
WW TC ON HTR 03,15 IN	831.0	0.3	0.26
WW TC ON HTR 08,15 IN	853.7	1.7	1.98
WW TC ON HTR 10,15 IN	828.9	0.4	0.10

Test 10, run 137 (continued)

INSTRUMENT	20-SEC AVG	STD DEV	NORMALIZED TEMP
WW TC ON HTR 15,15 IN	829.7	0.4	0.16
WW TC ON HTR 19,15 IN	845.6	0.6	1.36
WW TC ON HTR 25,15 IN	830.3	0.4	0.21
WW TC ON HTR 36,15 IN	864.5	1.0	2.79
WW TC ON HTR 01,17 IN	830.1	0.4	0.19
WW TC AJ HTR 02,17 IN	837.8	0.7	0.77
WW TC OP HTR 02,17 IN	834.5	0.4	0.53
WW TC ON HTR 08,17 IN	849.4	0.9	1.65
WW TC ON HTR 10,17 IN	829.1	0.4	0.11
WW TC ON HTR 11,17 IN	829.1	0.4	0.12
WW TC ON HTR 18,17 IN	844.5	0.5	1.27
WW TC ON HTR 19,17 IN	857.2	0.4	2.24
WW TC ON HTR 21,17 IN	833.3	0.4	0.43
WW TC ON HTR 22,17 IN	831.1	0.4	0.27
WW TC ON HTR 33,17 IN	836.9	0.4	0.70
WW TC ON HTR 37,17 IN	882.1	1.4	4.12
WW TC ON HTR 06,19 IN	832.1	0.5	0.34
WW TC AJ HTR 07,19 IN	845.8	0.6	1.37
WW TC OP HTR 07,19 IN	841.3	0.4	1.03
WW TC ON HTR 09,19 IN	832.3	0.5	0.35
WW TC ON HTR 14,19 IN	829.8	0.4	0.17
WW TC ON HTR 18,19 IN	858.0	0.4	2.30
WW TC ON HTR 27,19 IN	833.9	0.4	0.48
WW TC ON HTR 30,19 IN	830.2	0.4	0.20
WW TC ON HTR 34,19 IN	842.9	1.0	1.16
WW TC ON HTR 36,19 IN	888.9	0.9	4.63
WW TC ON HTR 37,19 IN	863.9	0.8	2.74
WW TC ON HTR 05,21 IN	830.3	0.4	0.21
WW TC ON HTR 06,21 IN	834.2	0.4	0.50
WW TC ON HTR 21,21 IN	832.5	0.8	0.37
WW TC ON HTR 24,21 IN	833.6	0.4	0.46
WW TC ON HTR 25,21 IN	831.9	0.4	0.33
WW TC ON HTR 27,21 IN	833.4	0.4	0.44
WW TC ON HTR 30,21 IN	830.3	0.5	0.20
WW TC ON HTR 33,21 IN	841.5	1.1	1.05
WW TC ON HTR 34,21 IN	864.1	0.8	2.76
WW TC ON HTR 04,23 IN	832.0	0.4	0.33
WW TC ON HTR 09,23 IN	838.3	0.3	0.81
WW TC ON HTR 14,23 IN	830.5	0.5	0.22
WW TC ON HTR 24,23 IN	833.3	0.3	0.43
WW TC ON HTR 28,23 IN	830.4	0.5	0.21
WW TC ON HTR 31,23 IN	840.1	0.2	0.94
WW TC ON ROD 01,25 IN	832.3	0.4	0.36
WW TC ON ROD 02,25 IN	850.2	0.4	1.71
WW TC ON ROD 05,25 IN	835.5	0.4	0.60
WW TC ON ROD 08,25 IN	862.4	0.1	2.63
WW TC ON ROD 14,25 IN	835.1	0.1	0.57
WW TC ON ROD 04,27 IN	830.0	0.2	0.19
WW TC ON ROD 07,27 IN	841.2	1.4	1.03
WW TC ON ROD 12,27 IN	832.9	0.9	0.40
WW TC ON ROD 16,27 IN	844.4	0.4	1.27
WW TC ON ROD 18,27 IN	858.1	0.3	2.31

Test 10, run 137 (continued)

INSTRUMENT	20-SEC AVG	STD DEV	NORMALIZED TEMP
WW TC ON ROD 03,29 IN	829.6	0.4	0.15
WW TC ON ROD 06,29 IN	832.5	0.3	0.37
WW TC ON ROD 10,29 IN	833.1	1.4	0.42
WW TC ON ROD 01,37 IN	839.2	0.0	0.88
WW TC ON ROD 02,37 IN	849.1	0.2	1.62
WW TC ON ROD 08,37 IN	850.0	0.2	1.69
WW TC ON ROD 14,37 IN	837.0	0.4	0.71
WW TC ON ROD 04,51 IN	834.3	0.2	0.51
WW TC ON ROD 07,51 IN	847.8	0.7	1.53
WW TC ON ROD 12,51 IN	837.0	0.4	0.71
WW TC ON ROD 16,51 IN	845.1	0.3	1.32
WW TC ON ROD 18,51 IN	853.2	0.3	1.93
WW TC ON ROD 03,63 IN	837.6	0.0	0.75
WW TC ON ROD 06,63 IN	843.3	0.2	1.19
WW TC ON ROD 10,63 IN	836.2	0.4	0.65
DUCT THERMOCOUPLES			
DUCT WALL TC,CH 38,19 IN(DEG F)	828.0	0.8	0.03
DUCT WALL TC,CH 53,19 IN	872.8	0.4	3.41
DUCT WALL TC,CH 28,21 IN	837.6	0.2	0.76
DUCT WALL TC,CH 43,21 IN	830.1	0.7	0.19
DUCT WALL TC,CH 44,21 IN	833.1	0.5	0.42
TEST SECTION HOUSING THERMOCOUPLES			
TS SHELL-BOT(DEG F)	829.1	0.5	
TS GUARD HTR-BOT	801.2	0.5	
TS HTR-BOT	751.3	0.5	
TS SHELL-LOW CTR	839.3	0.3	
TS GUARD HTR-LOW CTR	844.7	1.1	
TS HTR-LOW CTR	773.4	0.8	
TS SHELL-UP CTR	848.9	0.4	
TS GUARD HTR-UP CTR	865.8	0.8	
TS HTR-UP CTR	843.5	0.8	
TS SHELL-TOP	841.2	1.1	
TS GUARD HTR-TOP	853.0	1.7	
TS HTR-TOP	860.7	1.5	
REFERENCE BOX THERMOCOUPLES			
150 DEG REF BOX 1(DEG F)	147.8	1.1	
150 DEG REF BOX 2	149.2	1.0	
150 DEG REF BOX 3	151.5	0.9	
150 DEG REF BOX 4	149.5	0.6	
150 DEG REF BOX 5	147.9	0.2	
MISCELLANEOUS			
SOD PUMP SPEED(RPM)	484.9	1.5	
EXPANSION TANK LEVEL(% FULL)	75.4	0.2	

TEST SERIES 1C(BUNDLE 3C); TEST 11 RUN 101 03/10/78 9 29 30

CONDITIONS:

TEST SECTION FLOW: 0.90 L/S (14.3 GPM)

TEST SECTION POWER

19 CENTRAL HEATERS: 168.6 KW (16.6 KW/M/ROD) (5.1 KW/FT/ROD)

12 EDGE HEATERS: 0.0 KW (0.0 KW/M/ROD) (0.0 KW/FT/ROD)

TOTAL(31 HEATERS): 168.6 KW

TEST SECTION INLET TEMPERATURE: 441 DEG C (826 DEG F)

TEST SECTION OUTLET TEMPERATURE: 604 DEG C (1119 DEG F)

HEAT BALANCE:

HEAT INPUT FROM 31 FUEL PIN SIMULATORS: 168.6 KW

HEAT ABSORBED BY SODIUM=

FLOW X SP.HEAT X (TS OUT TEMP - TS IN TEMP) 157.3 KW

% OF INPUT HEAT ACCOUNTED FOR: 93.3 %

INSTRUMENT	20-SEC AVG	STD DEV
HEATER POWER-CENTRAL RODS(KW)		
HTR POWER IN ROD 1	8.9	0.0
HTR POWER IN RODS 8,9,10	26.5	0.0
HTR POWER IN RODS 14,15,16	26.5	0.0
HTR POWER IN RODS 2,3,11,19	35.6	0.0
HTR POWER IN RODS 5,6,13,17	35.6	0.0
HTR POWER IN RODS 4,7,12,18	35.5	0.0
HEATER POWER-EDGE RODS(KW)		
HTR POWER IN RODS 30,31	-0.0	0.0
HTR POWER IN RODS 24,25,27,28	-0.3	0.0
HTR POWER IN RODS 33,34	-0.0	0.0
HTR POWER IN RODS 21,22,36,37	-0.0	0.0
FLOWS		
TEST SECTION(TS) FLOW IN(GPM)	14.3	0.1
TS FLOW OUT(GPM)	15.0	0.1
TS BYPASS FLOW(GPM)	-1.0	0.2
LOOP FLOW TOTAL(GPM)	13.9	0.2
RADIATOR AIR FLOW(CFM)	1.4	0.0
PRESSURES		
TS IN PRESS(PSIG)	14.3	0.1
TS OUT PRESS(PSIG)	6.0	0.0
PUMP OUT PRESS(PSIG)	9.2	0.1
TS LINE PRESS IN(PSIG)	13.3	0.1
EXP TANK ARGON PRESS(PSIG)	2.5	0.1
TS BYP LINE PRESS IN(PSIG)	14.5	0.1
TS BYP LINE PRESS OUT(PSIG)	7.0	0.1

Test 11, run 101 (continued)

INSTRUMENT	20-SEC AVG	STD DEV	NORMALIZED TEMP
LOOP THERMOCOUPLES			
TEST SECT INLET WELL(DEG F)	826.7	0.4	
TEST SECT OUTLET WELL(DEG F)	1119.1	0.5	
PUMP IN PIPE WALL TC	821.4	3.4	
PUMP OUT PIPE WALL TC	818.5	0.5	
RAD IN PIPE WALL TC	1068.3	5.9	
RAD OUT PIPE WALL TC	822.9	4.5	
HEATER INTERNAL THERMOCOUPLES			
HTR TC IN HTR 08,12AB IN(DEG F)	1123.8	0.5	1.02
HTR TC IN HTR 13,12AB IN	1023.5	0.4	0.67
HTR TC IN HTR 18,12AB IN	1017.8	0.4	0.65
HTR TC IN HTR 22,12AB IN	1003.5	0.2	0.60
HTR TC IN HTR 08,12BC IN	1122.4	0.2	1.01
HTR TC IN HTR 13,12BC IN	1024.0	0.4	0.67
HTR TC IN HTR 18,12BC IN	1020.1	0.9	0.66
HTR TC IN HTR 22,12BC IN	1004.2	0.4	0.61
HTR TC IN HTR 09,15AB IN	1224.2	0.6	1.36
HTR TC IN HTR 10,15AB IN	1193.5	0.4	1.25
HTR TC IN HTR 16,15BC IN	1075.4	0.6	0.85
HTR TC IN HTR 25,15BC IN	970.7	0.3	0.49
HTR TC IN HTR 02,15.1 IN	1300.7	0.5	1.62
HTR TC IN HTR 03,15.1 IN	1331.2	0.8	1.73
HTR TC IN HTR 06,15.1 IN	1346.6	0.5	1.78
HTR TC IN HTR 15,15.1 IN	1246.5	0.5	1.44
HTR TC IN HTR 24,15.1 IN	1025.9	0.3	0.68
HTR TC IN HTR 33,15.1 IN	1027.7	0.4	0.69
HTR TC IN HTR 36,15.1 IN	994.6	0.4	0.57
HTR TC IN HTR 02,15.4 IN	1336.3	1.0	1.74
HTR TC IN HTR 03,15.4 IN	1333.5	0.5	1.73
HTR TC IN HTR 06,15.4 IN	1350.4	0.6	1.79
HTR TC IN HTR 15,15.4 IN	1257.4	0.4	1.47
HTR TC IN HTR 24,15.4 IN	1025.7	0.3	0.68
HTR TC IN HTR 33,15.4 IN	1033.6	0.4	0.71
HTR TC IN HTR 34,15.4 IN	1071.1	0.6	0.84
HTR TC IN HTR 36,15.4 IN	992.8	1.3	0.57
HTR TC IN HTR 02,15.6 IN	1334.4	0.4	1.74
HTR TC IN HTR 03,15.6 IN	1324.7	0.5	1.70
HTR TC IN HTR 06,15.6 IN	1377.4	0.6	1.88
HTR TC IN HTR 15,15.6 IN	1254.2	0.4	1.46
HTR TC IN HTR 24,15.6 IN	1001.3	0.4	0.60
HTR TC IN HTR 33,15.6 IN	1045.0	0.4	0.75
HTR TC IN HTR 34,15.6 IN	1043.9	0.5	0.74
HTR TC IN HTR 36,15.6 IN	985.3	0.3	0.54
HTR TC IN HTR 03,15.9 IN	1275.1	0.9	1.53
HTR TC IN HTR 06,15.9 IN	1383.4	0.5	1.90
HTR TC IN HTR 15,15.9 IN	1235.2	0.4	1.40

Test 11, run 101 (continued)

INSTRUMENT	20-SEC AVG	STD DEV	NORMALIZED TEMP
HTR TC IN HTR 24,15.9 IN	1000.9	0.3	0.60
HTR TC IN HTR 33,15.9 IN	1041.5	0.3	0.73
HTR TC IN HTR 34,15.9 IN	1035.9	0.4	0.72
HTR TC IN HTR 36,15.9 IN	981.3	0.3	0.53
HTR TC IN HTR 04,16.1 IN	1348.7	0.4	1.78
HTR TC IN HTR 05,16.1 IN	1331.9	0.4	1.73
HTR TC IN HTR 07,16.1 IN	1332.6	0.4	1.73
HTR TC IN HTR 21,16.1 IN	985.9	0.4	0.54
HTR TC IN HTR 27,16.1 IN	1027.5	0.3	0.69
HTR TC IN HTR 04,16.4 IN	1350.6	0.5	1.79
HTR TC IN HTR 05,16.4 IN	1336.2	0.5	1.74
HTR TC IN HTR 07,16.4 IN	1333.5	0.7	1.73
HTR TC IN HTR 21,16.4 IN	989.6	0.4	0.56
HTR TC IN HTR 27,16.4 IN	1032.6	0.4	0.70
HTR TC IN HTR 04,16.6 IN	1331.8	0.8	1.73
HTR TC IN HTR 05,16.6 IN	1336.1	0.5	1.74
HTR TC IN HTR 07,16.6 IN	1316.2	0.4	1.67
HTR TC IN HTR 21,16.6 IN	983.3	0.4	0.54
HTR TC IN HTR 27,16.6 IN	1030.0	0.2	0.70
HTR TC IN HTR 04,16.9 IN	1325.2	0.4	1.70
HTR TC IN HTR 07,16.9 IN	1314.3	0.5	1.67
HTR TC IN HTR 21,16.9 IN	982.8	0.3	0.53
HTR TC IN HTR 27,16.9 IN	1026.5	0.2	0.68
HTR TC IN HTR 11,18AB IN	1309.5	0.5	1.65
HTR TC IN HTR 12,18AB IN	1240.9	0.4	1.42
HTR TC IN HTR 14,18AB IN	1056.4	0.3	0.79
HTR TC IN HTR 30,18AB IN	1043.1	0.2	0.74
HTR TC IN HTR 11,18BC IN	1309.0	0.3	1.65
HTR TC IN HTR 12,18BC IN	1235.4	0.4	1.40
HTR TC IN HTR 14,18BC IN	1061.2	0.4	0.80
HTR TC IN HTR 17,18BC IN	1281.4	0.4	1.56
HTR TC IN HTR 30,18BC IN	1063.6	0.3	0.81
WIRE WRAP THERMOCOUPLES			
WW TC ON HTR 12,-1 IN(DEG F)	831.7	0.3	0.02
WW TC ON HTR 16,-1 IN	832.3	0.5	0.02
WW TC ON HTR 12,01 IN	863.0	1.4	0.12
WW TC ON HTR 16,09 IN	1024.5	0.5	0.68
WW TC ON HTR 04,11 IN	1132.7	0.5	1.05
WW TC ON HTR 05,11 IN	1124.6	0.4	1.02
WW TC ON HTR 13,11 IN	1100.2	0.4	0.94
WW TC ON HTR 17,11 IN	1035.8	0.3	0.72
WW TC ON HTR 28,11 IN	987.1	0.4	0.55
WW TC ON HTR 31,11 IN	923.0	0.4	0.33
WW TC ON HTR 03,13 IN	1174.2	0.5	1.19
WW TC ON HTR 11,13 IN	1146.2	0.4	1.09
WW TC ON HTR 13,13 IN	1104.4	0.4	0.95
WW TC ON HTR 15,13 IN	1063.9	0.4	0.81
WW TC ON HTR 17,13 IN	1026.5	0.4	0.68
WW TC ON HTR 22,13 IN	937.5	0.3	0.38
WW TC ON HTR 01,15 IN	1242.9	0.7	1.42

Test 11, run 101 (continued)

INSTRUMENT	20-SEC AVG	STD DEV	NORMALIZED TEMP
WW TC ON HTR 03,15 IN	1236.8	0.6	1.40
WW TC ON HTR 08,15 IN	1110.6	0.4	0.97
WW TC ON HTR 10,15 IN	1162.1	0.2	1.15
WW TC ON HTR 15,15 IN	1056.9	0.6	0.79
WW TC ON HTR 19,15 IN	1166.3	0.3	1.16
WW TC ON HTR 25,15 IN	966.7	0.4	0.48
WW TC ON HTR 36,15 IN	918.8	0.4	0.31
WW TC ON HTR 01,17 IN	1307.7	0.6	1.64
WW TC AJ HTR 02,17 IN	1257.8	0.5	1.47
WW TC OP HTR 02,17 IN	1288.2	0.5	1.58
WW TC ON HTR 08,17 IN	1142.4	0.4	1.08
WW TC ON HTR 10,17 IN	1142.6	0.4	1.08
WW TC ON HTR 11,17 IN	1095.3	0.4	0.92
WW TC ON HTR 18,17 IN	1188.4	0.4	1.24
WW TC ON HTR 19,17 IN	1180.5	0.7	1.21
WW TC ON HTR 21,17 IN	989.6	0.3	0.56
WW TC ON HTR 22,17 IN	1079.3	0.5	0.86
WW TC ON HTR 33,17 IN	949.3	0.4	0.42
WW TC ON HTR 37,17 IN	974.8	0.4	0.51
WW TC ON HTR 06,19 IN	1348.5	0.5	1.78
WW TC AJ HTR 07,19 IN	1311.2	0.5	1.66
WW TC OP HTR 07,19 IN	1337.2	0.5	1.75
WW TC ON HTR 09,19 IN	1241.0	0.5	1.42
WW TC ON HTR 14,19 IN	1080.1	0.4	0.87
WW TC ON HTR 18,19 IN	1203.9	0.4	1.29
WW TC ON HTR 27,19 IN	939.6	0.4	0.39
WW TC ON HTR 30,19 IN	983.8	0.4	0.54
WW TC ON HTR 34,19 IN	1086.1	0.4	0.89
WW TC ON HTR 36,19 IN	1028.8	0.4	0.69
WW TC ON HTR 37,19 IN	980.4	0.3	0.53
WW TC ON HTR 05,21 IN	1370.7	0.4	1.86
WW TC ON HTR 06,21 IN	1385.1	0.5	1.91
WW TC ON HTR 21,21 IN	1005.6	0.4	0.61
WW TC ON HTR 24,21 IN	972.3	0.3	0.50
WW TC ON HTR 25,21 IN	987.0	0.4	0.55
WW TC ON HTR 27,21 IN	1012.0	0.5	0.63
WW TC ON HTR 30,21 IN	1073.8	0.4	0.84
WW TC ON HTR 33,21 IN	1063.2	0.4	0.81
WW TC ON HTR 34,21 IN	1013.5	0.3	0.64
WW TC ON HTR 04,23 IN	1379.1	0.5	1.89
WW TC ON HTR 09,23 IN	1124.9	0.4	1.02
WW TC ON HTR 14,23 IN	1116.1	0.5	0.99
WW TC ON HTR 24,23 IN	1020.8	0.2	0.66
WW TC ON HTR 28,23 IN	1039.1	0.4	0.73
WW TC ON HTR 31,23 IN	1014.1	0.3	0.64
WW TC ON ROD 01,25 IN	1329.2	0.5	1.72
WW TC ON ROD 02,25 IN	1211.9	0.6	1.32
WW TC ON ROD 05,25 IN	1191.8	0.6	1.25
WW TC ON ROD 08,25 IN	1045.5	0.4	0.75
WW TC ON ROD 14,25 IN	1032.0	0.4	0.70
WW TC ON ROD 04,27 IN	1189.2	0.7	1.24
WW TC ON ROD 07,27 IN	1289.0	0.6	1.58
WW TC ON ROD 12,27 IN	1044.2	0.7	0.74

Test 11, run 101 (continued)

INSTRUMENT	20-SEC AVG	STD DEV	NORMALIZED TEMP
WW TC ON ROD 16,27 IN	1019.7	0.4	0.66
WW TC ON ROD 18,27 IN	1065.8	0.4	0.82
WW TC ON ROD 03,29 IN	1290.3	0.4	1.59
WW TC ON ROD 06,29 IN	1228.3	0.5	1.37
WW TC ON ROD 10,29 IN	1113.0	0.5	0.98
WW TC ON ROD 01,37 IN	1258.5	0.4	1.48
WW TC ON ROD 02,37 IN	1164.8	0.5	1.16
WW TC ON ROD 08,37 IN	1060.0	0.4	0.80
WW TC ON ROD 14,37 IN	1106.8	0.5	0.96
WW TC ON ROD 04,51 IN	1165.8	0.4	1.16
WW TC ON ROD 07,51 IN	1178.5	0.4	1.20
WW TC ON ROD 12,51 IN	1093.5	0.3	0.91
WW TC ON ROD 16,51 IN	1097.6	0.3	0.93
WW TC ON ROD 18,51 IN	1096.0	0.3	0.92
WW TC ON ROD 03,63 IN	1182.1	0.3	1.22
WW TC ON ROD 06,63 IN	1142.2	0.2	1.08
WW TC ON ROD 10,63 IN	1145.1	0.4	1.09
DUCT THERMOCOUPLES			
DUCT WALL TC,CH 38,19 IN(DEG F)	968.1	0.1	0.48
DUCT WALL TC,CH 53,19 IN	946.7	0.3	0.41
DUCT WALL TC,CH 28,21 IN	1004.3	0.4	0.61
DUCT WALL TC,CH 43,21 IN	976.3	0.2	0.51
DUCT WALL TC,CH 44,21 IN	981.3	0.1	0.53
TEST SECTION HOUSING THERMOCOUPLES			
TS SHELL-BOT(DEG F)	832.8	5.2	
TS GUARD HTR-BOT	819.0	0.5	
TS HTR-BOT	778.6	0.2	
TS SHELL-LOW CTR	994.3	0.3	
TS GUARD HTR-LOW CTR	988.3	0.4	
TS HTR-LOW CTR	897.2	0.3	
TS SHELL-UP CTR	1085.7	0.5	
TS GUARD HTR-UP CTR	1032.4	0.2	
TS HTR-UP CTR	963.9	0.2	
TS SHELL-TOP	1116.6	0.3	
TS GUARD HTR-TOP	1064.4	0.4	
TS HTR-TOP	994.4	0.3	
REFERENCE BOX THERMOCOUPLES			
150 DEG REF BOX 1(DEG F)	150.7	0.5	
150 DEG REF BOX 2	152.2	0.3	
150 DEG REF BOX 3	154.2	0.4	
150 DEG REF BOX 4	152.9	0.2	
150 DEG REF BOX 5	150.6	0.3	
MISCELLANEOUS			
SOD PUMP SPEED(RPM)	619.3	39.8	
EXPANSION TANK LEVEL(% FULL)	74.1	0.1	

TEST SERIES 10(BUNDLE 3C); TEST 11 RUN 106 03/09/78 15 0 52

CONDITIONS:

TEST SECTION FLOW: 0.92 L/S (14.5 GPM)

TEST SECTION POWER

19 CENTRAL HEATERS: 168.7 KW (16.6 KW/M/ROD) (5.1 KW/FT/ROD)

12 EDGE HEATERS: 99.4 KW (15.5 KW/M/ROD) (4.7 KW/FT/ROD)

TOTAL(31 HEATERS): 268.0 KW

TEST SECTION INLET TEMPERATURE: 424 DEG C (795 DEG F)

TEST SECTION OUTLET TEMPERATURE: 681 DEG C (1258 DEG F)

HEAT BALANCE:

HEAT INPUT FROM 31 FUEL PIN SIMULATORS: 268.0 KW

HEAT ABSORBED BY SODIUM=

FLOW X SP.HEAT X (TS OUT TEMP - TS IN TEMP) 254.0 KW

% OF INPUT HEAT ACCOUNTED FOR: 94.8 %

INSTRUMENT	20-SEC AVG	STD DEV
HEATER POWER-CENTRAL RODS(KW)		
HTR POWER IN ROD 1	8.8	0.0
HTR POWER IN RODS 8,9,10	26.7	0.0
HTR POWER IN RODS 14,15,16	26.5	0.0
HTR POWER IN RODS 2,3,11,19	35.4	0.0
HTR POWER IN RODS 5,6,13,17	35.6	0.0
HTR POWER IN RODS 4,7,12,18	35.6	0.0
HEATER POWER-EDGE RODS(KW)		
HTR POWER IN RODS 30,31	16.6	0.0
HTR POWER IN RODS 24,25,27,28	33.2	0.0
HTR POWER IN RODS 33,34	16.6	0.0
HTR POWER IN RODS 21,22,36,37	33.0	0.0
FLOWS		
TEST SECTION(TS) FLOW IN(GPM)	14.5	0.1
TS FLOW OUT(GPM)	15.4	0.1
TS BYPASS FLOW(GPM)	0.3	0.2
LOOP FLOW TOTAL(GPM)	14.0	0.2
RADIATOR AIR FLOW(CFM)	5.4	0.3
PRESSURES		
TS IN PRESS(PSIG)	14.4	0.1
TS OUT PRESS(PSIG)	6.1	0.1
PUMP OUT PRESS(PSIG)	9.0	0.1
TS LINE PRESS IN(PSIG)	13.3	0.1
EXP TANK ARGON PRESS(PSIG)	2.7	0.1
TS BYP LINE PRESS IN(PSIG)	14.6	0.1
TS BYP LINE PRESS OUT(PSIG)	6.9	0.1

Test 11, run 106 (continued)

INSTRUMENT	20-SEC AVG	STD DEV	NORMALIZED TEMP
LOOP THERMOCOUPLES			
TEST SECT INLET WELL(DEG F)	795.4	0.5	
TEST SECT OUTLET WELL(DEG F)	1258.6	0.5	
PUMP IN PIPE WALL TC	790.0	1.0	
PUMP OUT PIPE WALL TC	785.9	0.6	
RAD IN PIPE WALL TC	1179.8	8.5	
RAD OUT PIPE WALL TC	786.3	9.4	
HEATER INTERNAL THERMOCOUPLES			
HTR TC IN HTR 08,12AB IN(DEG F)	1132.2	0.4	0.73
HTR TC IN HTR 13,12AB IN	1109.4	0.4	0.68
HTR TC IN HTR 18,12AB IN	1102.3	0.6	0.66
HTR TC IN HTR 22,12AB IN	1117.3	0.4	0.69
HTR TC IN HTR 08,12BC IN	1129.3	0.5	0.72
HTR TC IN HTR 13,12BC IN	1110.7	0.5	0.68
HTR TC IN HTR 18,12BC IN	1103.2	0.5	0.66
HTR TC IN HTR 22,12BC IN	1114.8	0.3	0.69
HTR TC IN HTR 09,15AB IN	1234.3	0.5	0.95
HTR TC IN HTR 10,15AB IN	1216.8	0.5	0.91
HTR TC IN HTR 16,15BC IN	1173.5	0.5	0.82
HTR TC IN HTR 25,15BC IN	1160.7	0.4	0.79
HTR TC IN HTR 02,15.1 IN	1299.0	0.7	1.09
HTR TC IN HTR 03,15.1 IN	1330.2	0.7	1.15
HTR TC IN HTR 06,15.1 IN	1357.5	0.7	1.21
HTR TC IN HTR 15,15.1 IN	1260.1	0.5	1.00
HTR TC IN HTR 24,15.1 IN	1199.2	0.4	0.87
HTR TC IN HTR 33,15.1 IN	1187.9	0.2	0.85
HTR TC IN HTR 36,15.1 IN	1166.4	0.4	0.80
HTR TC IN HTR 02,15.4 IN	1353.1	0.7	1.20
HTR TC IN HTR 03,15.4 IN	1333.4	0.7	1.16
HTR TC IN HTR 06,15.4 IN	1362.4	0.6	1.22
HTR TC IN HTR 15,15.4 IN	1251.9	0.6	0.99
HTR TC IN HTR 24,15.4 IN	1208.8	0.4	0.89
HTR TC IN HTR 33,15.4 IN	1190.6	0.4	0.85
HTR TC IN HTR 34,15.4 IN	1195.5	1.4	0.86
HTR TC IN HTR 36,15.4 IN	1163.9	0.7	0.80
HTR TC IN HTR 02,15.6 IN	1352.1	0.5	1.20
HTR TC IN HTR 03,15.6 IN	1324.9	0.5	1.14
HTR TC IN HTR 06,15.6 IN	1395.0	0.6	1.29
HTR TC IN HTR 15,15.6 IN	1246.1	0.4	0.97
HTR TC IN HTR 24,15.6 IN	1203.4	0.5	0.88
HTR TC IN HTR 33,15.6 IN	1192.8	0.3	0.86
HTR TC IN HTR 34,15.6 IN	1183.3	0.8	0.84
HTR TC IN HTR 36,15.6 IN	1153.7	0.4	0.77
HTR TC IN HTR 03,15.9 IN	1259.5	0.6	1.00
HTR TC IN HTR 06,15.9 IN	1393.7	0.6	1.29
HTR TC IN HTR 15,15.9 IN	1230.3	0.5	0.94
HTR TC IN HTR 24,15.9 IN	1202.7	0.5	0.88
HTR TC IN HTR 33,15.9 IN	1188.1	0.4	0.85
HTR TC IN HTR 34,15.9 IN	1175.0	0.7	0.82

Test 11, run 106 (continued)

INSTRUMENT	20-SEC AVG	STD DEV	NORMALIZED TEMP
HTR TC IN HTR 36,15.9 IN	1148.8	0.2	0.76
HTR TC IN HTR 04,16.1 IN	1336.6	0.8	1.17
HTR TC IN HTR 05,16.1 IN	1329.3	0.6	1.15
HTR TC IN HTR 07,16.1 IN	1332.5	0.6	1.16
HTR TC IN HTR 21,16.1 IN	1187.1	0.4	0.85
HTR TC IN HTR 27,16.1 IN	1200.2	0.4	0.87
HTR TC IN HTR 04,16.4 IN	1339.1	0.5	1.17
HTR TC IN HTR 05,16.4 IN	1333.4	0.4	1.16
HTR TC IN HTR 07,16.4 IN	1333.9	0.5	1.16
HTR TC IN HTR 21,16.4 IN	1190.5	0.4	0.85
HTR TC IN HTR 27,16.4 IN	1205.2	0.3	0.88
HTR TC IN HTR 04,16.6 IN	1322.8	0.7	1.14
HTR TC IN HTR 05,16.6 IN	1335.3	0.5	1.17
HTR TC IN HTR 07,16.6 IN	1321.7	0.4	1.14
HTR TC IN HTR 21,16.6 IN	1197.0	0.4	0.87
HTR TC IN HTR 27,16.6 IN	1197.8	0.3	0.87
HTR TC IN HTR 04,16.9 IN	1316.3	0.5	1.12
HTR TC IN HTR 07,16.9 IN	1319.3	0.5	1.13
HTR TC IN HTR 21,16.9 IN	1196.2	0.3	0.87
HTR TC IN HTR 27,16.9 IN	1191.9	0.4	0.86
HTR TC IN HTR 11,18AB IN	1315.7	0.6	1.12
HTR TC IN HTR 12,18AB IN	1282.1	0.3	1.05
HTR TC IN HTR 14,18AB IN	1191.0	0.5	0.85
HTR TC IN HTR 30,18AB IN	1245.4	0.4	0.97
HTR TC IN HTR 11,18BC IN	1314.9	0.5	1.12
HTR TC IN HTR 12,18BC IN	1279.8	0.5	1.05
HTR TC IN HTR 14,18BC IN	1194.1	0.7	0.86
HTR TC IN HTR 17,18BC IN	1303.1	0.5	1.10
HTR TC IN HTR 30,18BC IN	1249.6	0.7	0.98
WIRE WRAP THERMOCOUPLES			
WW TC ON HTR 12,-1 IN(DEG F)	801.3	0.5	0.01
WW TC ON HTR 16,-1 IN	801.8	0.4	0.01
WW TC ON HTR 12,01 IN	832.8	0.5	0.08
WW TC ON HTR 16,09 IN	1028.9	0.4	0.50
WW TC ON HTR 04,11 IN	1107.0	0.5	0.67
WW TC ON HTR 05,11 IN	1096.5	0.5	0.65
WW TC ON HTR 13,11 IN	1093.5	0.4	0.64
WW TC ON HTR 17,11 IN	1076.0	0.3	0.61
WW TC ON HTR 28,11 IN	1060.3	0.4	0.57
WW TC ON HTR 31,11 IN	1043.0	0.3	0.53
WW TC ON HTR 03,13 IN	1145.5	0.6	0.76
WW TC ON HTR 11,13 IN	1143.8	0.6	0.75
WW TC ON HTR 13,13 IN	1138.4	0.5	0.74
WW TC ON HTR 15,13 IN	1132.6	0.5	0.73
WW TC ON HTR 17,13 IN	1121.1	0.5	0.70
WW TC ON HTR 22,13 IN	1089.9	0.5	0.64
WW TC ON HTR 01,15 IN	1220.1	0.6	0.92

Test 11, run 106 (continued)

INSTRUMENT	20-SEC AVG	STD DEV	NORMALIZED TEMP
WW TC ON HTR 03,15 IN	1214.6	0.5	0.91
WW TC ON HTR 08,15 IN	1160.4	0.5	0.79
WW TC ON HTR 10,15 IN	1184.2	0.5	0.84
WW TC ON HTR 15,15 IN	1168.7	0.4	0.81
WW TC ON HTR 19,15 IN	1186.1	0.4	0.84
WW TC ON HTR 25,15 IN	1092.6	0.4	0.64
WW TC ON HTR 36,15 IN	1075.3	0.3	0.60
WW TC ON HTR 01,17 IN	1304.1	0.7	1.10
WW TC AJ HTR 02,17 IN	1259.9	0.7	1.00
WW TC OP HTR 02,17 IN	1281.9	0.5	1.05
WW TC ON HTR 08,17 IN	1205.9	0.5	0.89
WW TC ON HTR 10,17 IN	1220.2	0.5	0.92
WW TC ON HTR 11,17 IN	1197.5	0.5	0.87
WW TC ON HTR 18,17 IN	1226.7	0.4	0.93
WW TC ON HTR 19,17 IN	1215.5	0.5	0.91
WW TC ON HTR 21,17 IN	1171.1	0.4	0.81
WW TC ON HTR 22,17 IN	1198.3	0.5	0.87
WW TC ON HTR 33,17 IN	1124.6	0.5	0.71
WW TC ON HTR 37,17 IN	1144.9	0.4	0.75
WW TC ON HTR 06,19 IN	1352.8	0.5	1.20
WW TC AJ HTR 07,19 IN	1306.6	0.8	1.10
WW TC OP HTR 07,19 IN	1331.4	0.6	1.16
WW TC ON HTR 09,19 IN	1289.8	0.4	1.07
WW TC ON HTR 14,19 IN	1215.7	0.5	0.91
WW TC ON HTR 18,19 IN	1255.0	0.5	0.99
WW TC ON HTR 27,19 IN	1147.5	0.5	0.76
WW TC ON HTR 30,19 IN	1171.4	0.4	0.81
WW TC ON HTR 34,19 IN	1227.6	0.4	0.93
WW TC ON HTR 36,19 IN	1201.5	0.4	0.88
WW TC ON HTR 37,19 IN	1168.8	0.4	0.81
WW TC ON HTR 05,21 IN	1389.4	0.5	1.28
WW TC ON HTR 06,21 IN	1392.8	0.5	1.29
WW TC ON HTR 21,21 IN	1211.5	0.4	0.90
WW TC ON HTR 24,21 IN	1201.1	0.3	0.88
WW TC ON HTR 25,21 IN	1193.8	1.0	0.86
WW TC ON HTR 27,21 IN	1207.6	0.4	0.89
WW TC ON HTR 30,21 IN	1256.3	0.6	1.00
WW TC ON HTR 33,21 IN	1255.2	0.3	0.99
WW TC ON HTR 34,21 IN	1211.3	0.4	0.90
WW TC ON HTR 04,23 IN	1388.2	0.5	1.28
WW TC ON HTR 09,23 IN	1272.7	0.4	1.03
WW TC ON HTR 14,23 IN	1278.5	0.5	1.04
WW TC ON HTR 24,23 IN	1219.6	0.4	0.92
WW TC ON HTR 28,23 IN	1231.4	0.5	0.94
WW TC ON HTR 31,23 IN	1213.6	0.3	0.90
WW TC ON ROD 01,25 IN	1365.2	0.4	1.23
WW TC ON ROD 02,25 IN	1299.7	0.4	1.09
WW TC ON ROD 05,25 IN	1305.9	0.4	1.10
WW TC ON ROD 08,25 IN	1215.2	0.2	0.91
WW TC ON ROD 14,25 IN	1225.2	0.4	0.93
WW TC ON ROD 04,27 IN	1292.6	0.7	1.07

Test 11, run 106 (continued)

INSTRUMENT	20-SEC AVG	STD DEV	NORMALIZED TEMP
WW TC ON ROD 07,27 IN	1338.2	0.4	1.17
WW TC ON ROD 12,27 IN	1221.6	1.1	0.92
WW TC ON ROD 16,27 IN	1210.8	0.4	0.90
WW TC ON ROD 18,27 IN	1237.6	0.4	0.95
WW TC ON ROD 03,29 IN	1334.0	0.5	1.16
WW TC ON ROD 06,29 IN	1318.7	0.4	1.13
WW TC ON ROD 10,29 IN	1241.2	0.4	0.96
WW TC ON ROD 01,37 IN	1327.2	0.5	1.15
WW TC ON ROD 02,37 IN	1276.9	0.5	1.04
WW TC ON ROD 08,37 IN	1228.5	0.3	0.93
WW TC ON ROD 14,37 IN	1260.3	0.4	1.00
WW TC ON ROD 04,51 IN	1280.7	0.4	1.05
WW TC ON ROD 07,51 IN	1288.5	0.4	1.06
WW TC ON ROD 12,51 IN	1243.6	0.3	0.97
WW TC ON ROD 16,51 IN	1251.8	0.4	0.99
WW TC ON ROD 18,51 IN	1247.9	0.3	0.98
WW TC ON ROD 03,63 IN	1288.4	0.4	1.06
WW TC ON ROD 06,63 IN	1273.5	0.3	1.03
WW TC ON ROD 10,63 IN	1270.1	0.4	1.02
DUCT THERMOCOUPLES			
DUCT WALL TC,CH 38,19 IN(DEG F)	1134.3	0.4	0.73
DUCT WALL TC,CH 53,19 IN	1135.4	0.3	0.73
DUCT WALL TC,CH 28,21 IN	1182.5	0.4	0.84
DUCT WALL TC,CH 43,21 IN	1187.8	0.3	0.85
DUCT WALL TC,CH 44,21 IN	1184.3	0.3	0.84
TEST SECTION HOUSING THERMOCOUPLES			
TS SHELL-BOT(DEG F)	804.9	9.9	
TS GUARD HTR-BOT	808.0	1.2	
TS HTR-BOT	776.1	0.6	
TS SHELL-LOW CTR	1171.0	0.4	
TS GUARD HTR-LOW CTR	1129.9	0.3	
TS HTR-LOW CTR	991.2	0.6	
TS SHELL-UP CTR	1243.0	0.5	
TS GUARD HTR-UP CTR	1159.6	0.3	
TS HTR-UP CTR	1072.4	0.4	
TS SHELL-TOP	1258.2	0.5	
TS GUARD HTR-TOP	1192.9	0.4	
TS HTR-TOP	1100.6	0.5	
REFERENCE BOX THERMOCOUPLES			
150 DEG REF BOX 1(DEG F)	149.7	0.4	
150 DEG REF BOX 2	151.4	0.4	
150 DEG REF BOX 3	154.1	0.4	
150 DEG REF BOX 4	152.8	0.3	
150 DEG REF BOX 5	151.3	0.1	
MISCELLANEOUS			
SOD PUMP SPEED(RPM)	609.5	10.8	
EXPANSION TANK LEVEL(% FULL)	70.3	0.2	

TEST SERIES 10(BUNDLE 3C); TEST 11 RUN 111 03/02/78 12 33 5

CONDITIONS:

TEST SECTION FLOW: 4.49 L/S (70.9 GPM)

TEST SECTION POWER

19 CENTRAL HEATERS:	168.6 KW	(16.6 KW/M/ROD)	(5.1 KW/FT/ROD)
12 EDGE HEATERS:	0.0 KW	(0.0 KW/M/ROD)	(0.0 KW/FT/ROD)
TOTAL(31 HEATERS):	168.6 KW		

TEST SECTION INLET TEMPERATURE: 442 DEG C (828 DEG F)

TEST SECTION OUTLET TEMPERATURE: 478 DEG C (893 DEG F)

HEAT BALANCE:

HEAT INPUT FROM 31 FUEL PIN SIMULATORS:	168.6 KW
HEAT ABSORBED BY SODIUM= FLOW X SP.HEAT X (TS OUT TEMP - TS IN TEMP)	174.5 KW
% OF INPUT HEAT ACCOUNTED FOR:	103.5 %

INSTRUMENT	20-SEC AVG	STD DEV
HEATER POWER-CENTRAL RODS(KW)		
HTR POWER IN ROD 1	8.9	0.0
HTR POWER IN RODS 8,9,10	26.8	0.0
HTR POWER IN RODS 14,15,16	26.5	0.0
HTR POWER IN RODS 2,3,11,19	35.3	0.0
HTR POWER IN RODS 5,6,13,17	35.7	0.0
HTR POWER IN RODS 4,7,12,18	35.4	0.0
HEATER POWER-EDGE RODS(KW)		
HTR POWER IN RODS 30,31	-0.0	0.0
HTR POWER IN RODS 24,25,27,28	-0.4	0.0
HTR POWER IN RODS 33,34	-0.0	0.0
HTR POWER IN RODS 21,22,36,37	-0.0	0.0
FLOWS		
TEST SECTION(TS) FLOW IN(GPM)	70.9	0.1
TS FLOW OUT(GPM)	71.1	0.2
TS BYPASS FLOW(GPM)	1.9	0.1
LOOP FLOW TOTAL(GPM)	70.8	0.5
RADIATOR AIR FLOW(CFM)	2.1	0.1
PRESSURES		
TS IN PRESS(PSIG)	97.4	0.1
TS OUT PRESS(PSIG)	8.3	0.1
PUMP OUT PRESS(PSIG)	94.2	0.1
TS LINE PRESS IN(PSIG)	97.9	0.1
EXP TANK ARGON PRESS(PSIG)	5.2	0.1
TS BYP LINE PRESS IN(PSIG)	99.1	0.1
TS BYP LINE PRESS OUT(PSIG)	9.3	0.1

Test 11, run 111 (continued)

INSTRUMENT	20-SEC AVG	STD DEV	NORMALIZED TEMP
LOOP THERMOCOUPLES			
TEST SECT INLET WELL(DEG F)	828.8	0.8	
TEST SECT OUTLET WELL(DEG F)	893.9	0.5	
PUMP IN PIPE WALL TC	832.3	4.9	
PUMP OUT PIPE WALL TC	824.3	0.4	
RAD IN PIPE WALL TC	848.6	2.5	
RAD OUT PIPE WALL TC	825.3	1.1	
HEATER INTERNAL THERMOCOUPLES			
HTR TC IN HTR C8,12AB IN(DEG F)	931.8	0.5	1.58
HTR TC IN HTR 13,12AB IN	902.9	0.6	1.14
HTR TC IN HTR 18,12AB IN	920.8	0.4	1.41
HTR TC IN HTR 22,12AB IN	865.7	0.5	0.57
HTR TC IN HTR 08,12BC IN	928.2	0.5	1.53
HTR TC IN HTR 13,12BC IN	909.1	0.5	1.23
HTR TC IN HTR 18,12BC IN	921.6	0.6	1.43
HTR TC IN HTR 22,12BC IN	867.4	0.2	0.59
HTR TC IN HTR C9,15AB IN	955.0	0.7	1.94
HTR TC IN HTR 10,15AB IN	949.1	0.4	1.85
HTR TC IN HTR 16,15BC IN	921.5	0.5	1.42
HTR TC IN HTR 25,15BC IN	855.9	0.3	0.42
HTR TC IN HTR 02,15.1 IN	965.1	0.8	2.09
HTR TC IN HTR 03,15.1 IN	982.3	0.6	2.36
HTR TC IN HTR 06,15.1 IN	970.0	0.5	2.17
HTR TC IN HTR 15,15.1 IN	958.5	0.5	1.99
HTR TC IN HTR 24,15.1 IN	879.8	0.3	0.78
HTR TC IN HTR 33,15.1 IN	871.0	0.4	0.65
HTR TC IN HTR 36,15.1 IN	858.9	0.8	0.46
HTR TC IN HTR C2,15.4 IN	981.2	0.5	2.34
HTR TC IN HTR 03,15.4 IN	993.4	0.6	2.53
HTR TC IN HTR 06,15.4 IN	972.6	0.6	2.21
HTR TC IN HTR 15,15.4 IN	955.8	0.5	1.95
HTR TC IN HTR 24,15.4 IN	879.0	0.2	0.77
HTR TC IN HTR 33,15.4 IN	872.9	0.4	0.68
HTR TC IN HTR 34,15.4 IN	881.7	0.9	0.81
HTR TC IN HTR 36,15.4 IN	856.2	0.6	0.42
HTR TC IN HTR 02,15.6 IN	985.0	0.6	2.40
HTR TC IN HTR 03,15.6 IN	996.9	0.7	2.58
HTR TC IN HTR C6,15.6 IN	984.8	0.7	2.40
HTR TC IN HTR 15,15.6 IN	955.0	0.4	1.94
HTR TC IN HTR 24,15.6 IN	872.1	0.5	0.66
HTR TC IN HTR 33,15.6 IN	875.0	0.4	0.71
HTR TC IN HTR 34,15.6 IN	877.4	0.4	0.75
HTR TC IN HTR 36,15.6 IN	852.4	0.3	0.36
HTR TC IN HTR 03,15.9 IN	972.8	0.6	2.21
HTR TC IN HTR 06,15.9 IN	1005.1	0.4	2.71
HTR TC IN HTR 15,15.9 IN	947.6	0.4	1.82
HTR TC IN HTR 24,15.9 IN	871.7	0.4	0.66
HTR TC IN HTR 33,15.9 IN	871.6	0.4	0.66
HTR TC IN HTR 34,15.9 IN	871.9	0.5	0.66

Test 11, run 111 (continued)

INSTRUMENT	20-SEC AVG	STD DEV	NORMALIZED TEMP
HTR TC IN HTR 36,15.9 IN	850.7	0.4	0.34
HTR TC IN HTR 04,16.1 IN	974.5	0.5	2.24
HTR TC IN HTR 05,16.1 IN	970.6	0.9	2.18
HTR TC IN HTR 07,16.1 IN	973.2	0.5	2.22
HTR TC IN HTR 21,16.1 IN	852.1	0.5	0.36
HTR TC IN HTR 27,16.1 IN	879.0	0.3	0.77
HTR TC IN HTR 04,16.4 IN	987.6	0.4	2.44
HTR TC IN HTR 05,16.4 IN	972.2	0.4	2.20
HTR TC IN HTR 07,16.4 IN	973.7	0.5	2.23
HTR TC IN HTR 21,16.4 IN	875.0	0.6	0.71
HTR TC IN HTR 27,16.4 IN	895.4	0.8	1.02
HTR TC IN HTR 04,16.6 IN	988.7	0.8	2.46
HTR TC IN HTR 05,16.6 IN	974.6	0.7	2.24
HTR TC IN HTR 07,16.6 IN	969.8	0.6	2.16
HTR TC IN HTR 21,16.6 IN	885.5	0.7	0.87
HTR TC IN HTR 27,16.6 IN	896.6	0.7	1.04
HTR TC IN HTR 04,16.9 IN	977.3	0.4	2.28
HTR TC IN HTR 07,16.9 IN	969.7	0.3	2.16
HTR TC IN HTR 21,16.9 IN	865.2	0.5	0.56
HTR TC IN HTR 27,16.9 IN	880.6	0.4	0.80
HTR TC IN HTR 11,18AB IN	970.1	0.5	2.17
HTR TC IN HTR 12,18AB IN	953.9	0.5	1.92
HTR TC IN HTR 14,18AB IN	914.8	0.6	1.32
HTR TC IN HTR 30,18AB IN	1476.5	1.3	9.95
HTR TC IN HTR 11,18BC IN	970.5	0.5	2.18
HTR TC IN HTR 12,18BC IN	955.3	0.6	1.94
HTR TC IN HTR 14,18BC IN	923.6	0.5	1.46
HTR TC IN HTR 17,18BC IN	966.3	0.4	2.11
HTR TC IN HTR 30,18BC IN	1485.3	1.3	****
WIRE WRAP THERMOCOUPLES			
WW TC ON HTR 12,-1 IN(DEG F)	834.1	0.6	0.08
WW TC ON HTR 16,-1 IN	831.8	0.4	0.05
WW TC ON HTR 12,01 IN	841.0	0.4	0.19
WW TC ON HTR 16,09 IN	884.2	0.5	0.85
WW TC ON HTR 04,11 IN	902.5	0.9	1.13
WW TC ON HTR 05,11 IN	896.4	0.3	1.04
WW TC ON HTR 13,11 IN	892.2	0.6	0.97
WW TC ON HTR 17,11 IN	883.3	0.4	0.84
WW TC ON HTR 28,11 IN	866.8	0.6	0.58
WW TC ON HTR 31,11 IN	852.4	0.3	0.36
WW TC ON HTR 03,13 IN	901.4	0.4	1.11
WW TC ON HTR 11,13 IN	906.4	0.5	1.19
WW TC ON HTR 13,13 IN	896.3	0.4	1.04
WW TC ON HTR 15,13 IN	887.8	0.4	0.91
WW TC ON HTR 17,13 IN	888.4	0.6	0.92
WW TC ON HTR 22,13 IN	847.4	1.1	0.29
WW TC ON HTR 01,15 IN	924.3	0.4	1.47
WW TC ON HTR 03,15 IN	926.4	0.5	1.50

Test 11, run 111 (continued)

INSTRUMENT	20-SEC AVG	STD DEV	NORMALIZED TEMP
WW TC ON HTR 08,15 IN	898.0	0.2	1.06
WW TC ON HTR 10,15 IN	910.9	0.5	1.26
WW TC ON HTR 15,15 IN	889.6	0.4	0.93
WW TC ON HTR 19,15 IN	907.6	0.5	1.21
WW TC ON HTR 25,15 IN	855.3	0.8	0.41
WW TC ON HTR 36,15 IN	842.9	0.4	0.22
WW TC ON HTR 01,17 IN	937.0	0.5	1.66
WW TC AJ HTR 02,17 IN	921.9	0.4	1.43
WW TC OP HTR 02,17 IN	924.9	0.5	1.48
WW TC ON HTR 08,17 IN	904.9	0.5	1.17
WW TC ON HTR 10,17 IN	903.7	0.7	1.15
WW TC ON HTR 11,17 IN	896.9	0.4	1.05
WW TC ON HTR 18,17 IN	914.1	0.5	1.31
WW TC ON HTR 19,17 IN	910.0	0.6	1.25
WW TC ON HTR 21,17 IN	870.1	0.5	0.63
WW TC ON HTR 22,17 IN	892.3	0.6	0.97
WW TC ON HTR 33,17 IN	842.4	0.4	0.21
WW TC ON HTR 37,17 IN	854.0	0.5	0.39
WW TC ON HTR 06,19 IN	950.2	0.5	1.86
WW TC AJ HTR 07,19 IN	923.3	0.6	1.45
WW TC OP HTR 07,19 IN	932.6	0.8	1.59
WW TC ON HTR 09,19 IN	937.5	0.3	1.67
WW TC ON HTR 14,19 IN	884.2	0.4	0.85
WW TC ON HTR 18,19 IN	919.7	0.5	1.40
WW TC ON HTR 27,19 IN	847.1	0.4	0.28
WW TC ON HTR 30,19 IN	849.2	0.4	0.31
WW TC ON HTR 34,19 IN	880.6	0.2	0.80
WW TC ON HTR 36,19 IN	870.8	0.3	0.64
WW TC ON HTR 37,19 IN	857.4	0.2	0.44
WW TC ON HTR 05,21 IN	952.4	0.2	1.90
WW TC ON HTR 06,21 IN	956.3	0.4	1.96
WW TC ON HTR 21,21 IN	866.3	0.5	0.58
WW TC ON HTR 24,21 IN	850.5	0.6	0.33
WW TC ON HTR 25,21 IN	851.7	0.8	0.35
WW TC ON HTR 27,21 IN	857.7	0.8	0.44
WW TC ON HTR 30,21 IN	879.6	0.4	0.78
WW TC ON HTR 33,21 IN	881.4	0.4	0.81
WW TC ON HTR 34,21 IN	865.6	0.4	0.56
WW TC ON HTR 04,23 IN	951.2	0.6	1.88
WW TC ON HTR 09,23 IN	900.7	0.4	1.10
WW TC ON HTR 14,23 IN	911.6	0.5	1.27
WW TC ON HTR 24,23 IN	851.7	0.3	0.35
WW TC ON HTR 28,23 IN	876.8	0.5	0.74
WW TC ON HTR 31,23 IN	864.8	0.2	0.55
WW TC ON ROD 01,25 IN	946.6	0.3	1.81
WW TC ON ROD 02,25 IN	908.1	0.5	1.22
WW TC ON ROD 05,25 IN	924.2	0.4	1.46
WW TC ON ROD 08,25 IN	867.1	0.4	0.59
WW TC ON ROD 14,25 IN	878.8	0.3	0.77
WW TC ON ROD 04,27 IN	909.3	0.4	1.24

Test 11, run 111 (continued)

INSTRUMENT	20-SEC AVG	STD DEV	NORMALIZED TEMP
WW TC ON ROD 07,27 IN	934.0	0.4	1.62
WW TC ON ROD 12,27 IN	875.9	0.4	0.72
WW TC ON ROD 16,27 IN	864.6	0.4	0.55
WW TC ON ROD 18,27 IN	874.7	0.3	0.70
WW TC ON ROD 03,29 IN	936.0	0.3	1.65
WW TC ON ROD 06,29 IN	923.6	0.2	1.46
WW TC ON ROD 10,29 IN	884.6	0.3	0.86
WW TC ON ROD 01,37 IN	928.5	0.2	1.53
WW TC ON ROD 02,37 IN	891.9	0.4	0.97
WW TC ON ROD 08,37 IN	875.4	0.4	0.72
WW TC ON ROD 14,37 IN	900.6	0.4	1.10
WW TC ON ROD 04,51 IN	909.4	0.3	1.24
WW TC ON ROD 07,51 IN	908.7	0.3	1.23
WW TC ON ROD 12,51 IN	883.5	0.4	0.84
WW TC ON ROD 16,51 IN	889.8	0.3	0.94
WW TC ON ROD 18,51 IN	880.7	0.3	0.80
WW TC ON ROD 03,63 IN	913.5	0.3	1.30
WW TC ON ROD 06,63 IN	899.0	0.4	1.08
WW TC ON ROD 10,63 IN	899.7	0.3	1.09
DUCT THERMOCOUPLES			
DUCT WALL TC,CH 38,19 IN(DEG F)	850.8	0.2	0.34
DUCT WALL TC,CH 53,19 IN	847.5	0.3	0.29
DUCT WALL TC,CH 28,21 IN	860.7	0.3	0.49
DUCT WALL TC,CH 43,21 IN	852.8	0.4	0.37
DUCT WALL TC,CH 44,21 IN	856.7	0.3	0.43
TEST SECTION HOUSING THERMOCOUPLES			
TS SHELL-BOT(DEG F)	834.8	1.0	
TS GUARD HTR-BOT	816.9	0.5	
TS HTR-BOT	775.5	0.5	
TS SHELL-LOW CTR	856.1	0.5	
TS GUARD HTR-LOW CTR	852.7	0.4	
TS HTR-LOW CTR	768.7	0.3	
TS SHELL-UP CTR	883.6	0.7	
TS GUARD HTR-UP CTR	876.6	0.4	
TS HTR-UP CTR	841.2	0.5	
TS SHELL-TOP	893.4	0.5	
TS GUARD HTR-TOP	896.1	0.6	
TS HTR-TOP	849.1	0.4	
REFERENCE BOX THERMOCOUPLES			
150 DEG REF BOX 1(DEG F)	150.5	0.5	
150 DEG REF BOX 2	152.3	0.5	
150 DEG REF BOX 3	154.3	0.4	
150 DEG REF BOX 4	152.5	0.4	
150 DEG REF BOX 5	150.4	0.4	
MISCELLANEOUS			
SOD PUMP SPEED(RPM)	2861.6	46.2	
EXPANSION TANK LEVEL(% FULL)	74.8	0.2	

TEST SERIES 10(BUNDLE 3C); TEST 11 RUN 115 03/02/78 11 9 57

CONDITIONS:

TEST SECTION FLOW: 4.52 L/S (71.3 GPM)

TEST SECTION POWER

19 CENTRAL HEATERS:	167.8 KW	(16.6 KW/M/ROD)	(5.0 KW/FT/ROD)
12 EDGE HEATERS:	95.8 KW	(15.0 KW/M/ROD)	(4.6 KW/FT/ROD)
TOTAL(31 HEATERS):	263.6 KW		

TEST SECTION INLET TEMPERATURE: 440 DEG C (825 DEG F)

TEST SECTION OUTLET TEMPERATURE: 495 DEG C (923 DEG F)

HEAT BALANCE:

HEAT INPUT FROM 31 FUEL PIN SIMULATORS: 263.6 KW

HEAT ABSORBED BY SODIUM=
FLOW X SP.HEAT X (TS OUT TEMP - TS IN TEMP) 265.0 KW

% OF INPUT HEAT ACCOUNTED FOR: 100.5 %

INSTRUMENT	20-SEC AVG	STD DEV
HEATER POWER-CENTRAL RODS(KW)		
HTR POWER IN ROD 1	8.8	0.0
HTR POWER IN RODS 8,9,10	26.5	0.0
HTR POWER IN RODS 14,15,16	26.5	0.0
HTR POWER IN RODS 2,3,11,19	35.3	0.0
HTR POWER IN RODS 5,6,13,17	35.4	0.0
HTR POWER IN RODS 4,7,12,18	35.3	0.0
HEATER POWER-EDGE RODS(KW)		
HTR POWER IN RODS 30,31	15.8	0.0
HTR POWER IN RODS 24,25,27,28	32.0	0.1
HTR POWER IN RODS 33,34	15.9	0.0
HTR POWER IN RODS 21,22,36,37	32.1	0.0
FLOWS		
TEST SECTION(TS) FLOW IN(GPM)	71.3	0.1
TS FLOW OUT(GPM)	72.0	0.2
TS BYPASS FLOW(GPM)	1.2	0.2
LOOP FLOW TOTAL(GPM)	71.1	0.4
RADIATOR AIR FLOW(CFM)	11.0	0.6
PRESSURES		
TS IN PRESS(PSIG)	97.9	0.1
TS OUT PRESS(PSIG)	8.3	0.1
PUMP OUT PRESS(PSIG)	94.8	0.1
TS LINE PRESS IN(PSIG)	98.5	0.1
EXP TANK ARGON PRESS(PSIG)	5.3	0.1
TS BYP LINE PRESS IN(PSIG)	99.7	0.1
TS BYP LINE PRESS OUT(PSIG)	9.3	0.1

Test 11, run 115 (continued)

INSTRUMENT	20-SEC AVG	STD DEV	NORMALIZED TEMP
LOOP THERMOCOUPLES			
TEST SECT INLET WELL(DEG F)	825.2	0.6	
TEST SECT OUTLET WELL(DEG F)	923.5	0.8	
PUMP IN PIPE WALL TC	827.2	3.0	
PUMP OUT PIPE WALL TC	819.4	0.5	
RAD IN PIPE WALL TC	863.6	2.9	
RAD OUT PIPE WALL TC	820.4	1.3	
HEATER INTERNAL THERMOCOUPLES			
HTR TC IN HTR 08,12AB IN(DEG F)	932.8	0.5	1.10
HTR TC IN HTR 13,12AB IN	922.3	0.9	0.99
HTR TC IN HTR 18,12AB IN	932.4	0.4	1.09
HTR TC IN HTR 22,12AB IN	925.5	0.5	1.02
HTR TC IN HTR 08,12BC IN	929.3	0.4	1.06
HTR TC IN HTR 13,12BC IN	921.0	0.8	0.97
HTR TC IN HTR 18,12BC IN	933.0	0.8	1.10
HTR TC IN HTR 22,12BC IN	921.9	0.3	0.98
HTR TC IN HTR 09,15AB IN	957.4	0.6	1.34
HTR TC IN HTR 10,15AB IN	947.6	0.4	1.25
HTR TC IN HTR 16,15BC IN	937.7	1.0	1.14
HTR TC IN HTR 25,15BC IN	931.9	0.3	1.09
HTR TC IN HTR 02,15.1 IN	961.6	0.5	1.39
HTR TC IN HTR 03,15.1 IN	969.5	0.5	1.47
HTR TC IN HTR 06,15.1 IN	964.0	0.5	1.41
HTR TC IN HTR 15,15.1 IN	957.9	0.9	1.35
HTR TC IN HTR 24,15.1 IN	937.7	0.3	1.14
HTR TC IN HTR 33,15.1 IN	938.6	0.5	1.15
HTR TC IN HTR 36,15.1 IN	932.9	0.8	1.10
HTR TC IN HTR 02,15.4 IN	973.0	0.4	1.50
HTR TC IN HTR 03,15.4 IN	981.4	0.8	1.59
HTR TC IN HTR 06,15.4 IN	965.9	0.8	1.43
HTR TC IN HTR 15,15.4 IN	952.3	0.4	1.29
HTR TC IN HTR 24,15.4 IN	946.6	0.3	1.23
HTR TC IN HTR 33,15.4 IN	940.4	0.4	1.17
HTR TC IN HTR 34,15.4 IN	935.8	0.5	1.13
HTR TC IN HTR 36,15.4 IN	932.8	0.5	1.09
HTR TC IN HTR 02,15.6 IN	974.1	0.6	1.51
HTR TC IN HTR 03,15.6 IN	982.5	0.5	1.60
HTR TC IN HTR 06,15.6 IN	976.4	0.4	1.54
HTR TC IN HTR 15,15.6 IN	950.8	1.1	1.28
HTR TC IN HTR 24,15.6 IN	945.3	0.4	1.22
HTR TC IN HTR 33,15.6 IN	939.2	1.3	1.16
HTR TC IN HTR 34,15.6 IN	937.5	0.6	1.14
HTR TC IN HTR 36,15.6 IN	927.9	0.4	1.05
HTR TC IN HTR 03,15.9 IN	963.9	0.9	1.41
HTR TC IN HTR 06,15.9 IN	994.8	0.5	1.72
HTR TC IN HTR 15,15.9 IN	943.5	1.5	1.20
HTR TC IN HTR 24,15.9 IN	945.5	0.4	1.22
HTR TC IN HTR 33,15.9 IN	936.1	0.4	1.13
HTR TC IN HTR 34,15.9 IN	933.7	0.5	1.10

Test 11, run 115 (continued)

INSTRUMENT	20-SEC AVG	STD DEV	NORMALIZED TEMP
HTR TC IN HTR 36,15.9 IN	925.8	0.4	1.02
HTR TC IN HTR 04,16.1 IN	968.5	1.4	1.46
HTR TC IN HTR 05,16.1 IN	966.0	0.6	1.43
HTR TC IN HTR 07,16.1 IN	969.0	1.8	1.46
HTR TC IN HTR 21,16.1 IN	934.3	0.3	1.11
HTR TC IN HTR 27,16.1 IN	947.6	0.3	1.24
HTR TC IN HTR 04,16.4 IN	982.4	0.9	1.60
HTR TC IN HTR 05,16.4 IN	967.4	0.4	1.45
HTR TC IN HTR 07,16.4 IN	968.6	0.5	1.46
HTR TC IN HTR 21,16.4 IN	938.3	0.5	1.15
HTR TC IN HTR 27,16.4 IN	953.5	0.5	1.31
HTR TC IN HTR 04,16.6 IN	983.1	1.0	1.61
HTR TC IN HTR 05,16.6 IN	969.2	0.7	1.47
HTR TC IN HTR 07,16.6 IN	964.9	0.5	1.42
HTR TC IN HTR 21,16.6 IN	941.9	0.4	1.19
HTR TC IN HTR 27,16.6 IN	951.5	0.7	1.29
HTR TC IN HTR 04,16.9 IN	970.3	0.5	1.48
HTR TC IN HTR 07,16.9 IN	964.0	1.2	1.41
HTR TC IN HTR 21,16.9 IN	938.1	0.5	1.15
HTR TC IN HTR 27,16.9 IN	945.3	0.5	1.22
HTR TC IN HTR 11,18AB IN	966.1	0.5	1.43
HTR TC IN HTR 12,18AB IN	958.8	0.4	1.36
HTR TC IN HTR 14,18AB IN	939.9	0.6	1.17
HTR TC IN HTR 30,18AB IN	1316.3	0.9	4.99
HTR TC IN HTR 11,18BC IN	965.9	0.5	1.43
HTR TC IN HTR 12,18BC IN	959.9	0.5	1.37
HTR TC IN HTR 14,18BC IN	950.8	0.4	1.28
HTR TC IN HTR 17,18BC IN	967.2	0.2	1.44
HTR TC IN HTR 30,18BC IN	1309.2	1.0	4.92
WIRE WRAP THERMOCOUPLES			
WW TC ON HTR 12,-1 IN(DEG F)	829.3	0.5	0.04
WW TC ON HTR 16,-1 IN	827.5	0.4	0.02
WW TC ON HTR 12,01 IN	836.7	0.3	0.12
WW TC ON HTR 16,09 IN	883.2	0.5	0.59
WW TC ON HTR 04,11 IN	897.9	0.4	0.74
WW TC ON HTR 05,11 IN	890.9	0.5	0.67
WW TC ON HTR 13,11 IN	890.4	0.3	0.66
WW TC ON HTR 17,11 IN	889.1	0.5	0.65
WW TC ON HTR 28,11 IN	883.6	0.6	0.59
WW TC ON HTR 31,11 IN	884.8	0.3	0.61
WW TC ON HTR 03,13 IN	897.3	0.4	0.73
WW TC ON HTR 11,13 IN	904.5	0.5	0.81
WW TC ON HTR 13,13 IN	900.6	0.4	0.77
WW TC ON HTR 15,13 IN	897.1	0.4	0.73
WW TC ON HTR 17,13 IN	900.2	0.4	0.76
WW TC ON HTR 22,13 IN	892.8	0.4	0.69
WW TC ON HTR 01,15 IN	919.3	0.4	0.96
WW TC ON HTR 03,15 IN	918.1	0.5	0.95

Test 11, run 115 (continued)

INSTRUMENT	20-SEC AVG	STD DEV	NORMALIZED TEMP
WW TC ON HTR 08,15 IN	907.8	0.4	0.84
WW TC ON HTR 10,15 IN	911.0	0.5	0.87
WW TC ON HTR 15,15 IN	907.7	0.4	0.84
WW TC ON HTR 19,15 IN	910.3	0.3	0.87
WW TC ON HTR 25,15 IN	890.7	1.2	0.67
WW TC ON HTR 36,15 IN	883.1	1.5	0.59
WW TC ON HTR 01,17 IN	931.6	0.4	1.08
WW TC AJ HTR 02,17 IN	921.7	0.4	0.98
WW TC OP HTR 02,17 IN	922.8	0.4	0.99
WW TC ON HTR 08,17 IN	913.6	0.3	0.90
WW TC ON HTR 10,17 IN	914.4	1.0	0.91
WW TC ON HTR 11,17 IN	913.3	1.0	0.90
WW TC ON HTR 18,17 IN	918.9	0.4	0.95
WW TC ON HTR 19,17 IN	918.1	0.5	0.95
WW TC ON HTR 21,17 IN	914.2	0.9	0.91
WW TC ON HTR 22,17 IN	917.8	0.5	0.94
WW TC ON HTR 33,17 IN	888.6	0.9	0.65
WW TC ON HTR 37,17 IN	899.8	0.4	0.76
WW TC ON HTR 06,19 IN	946.8	1.2	1.24
WW TC AJ HTR 07,19 IN	928.9	0.5	1.05
WW TC OP HTR 07,19 IN	932.8	0.4	1.09
WW TC ON HTR 09,19 IN	938.7	1.2	1.15
WW TC ON HTR 14,19 IN	915.9	0.4	0.92
WW TC ON HTR 18,19 IN	927.6	0.3	1.04
WW TC ON HTR 27,19 IN	894.0	0.4	0.70
WW TC ON HTR 30,19 IN	898.4	0.8	0.75
WW TC ON HTR 34,19 IN	916.6	0.4	0.93
WW TC ON HTR 36,19 IN	912.7	0.3	0.89
WW TC ON HTR 37,19 IN	899.7	0.3	0.76
WW TC ON HTR 05,21 IN	950.7	0.2	1.28
WW TC ON HTR 06,21 IN	952.8	0.6	1.30
WW TC ON HTR 21,21 IN	915.0	0.5	0.91
WW TC ON HTR 24,21 IN	904.5	0.6	0.81
WW TC ON HTR 25,21 IN	900.4	0.8	0.77
WW TC ON HTR 27,21 IN	910.2	1.2	0.86
WW TC ON HTR 30,21 IN	921.0	0.3	0.97
WW TC ON HTR 33,21 IN	927.3	0.4	1.04
WW TC ON HTR 34,21 IN	913.1	1.1	0.89
WW TC ON HTR 04,23 IN	948.1	0.4	1.25
WW TC ON HTR 09,23 IN	929.2	0.3	1.06
WW TC ON HTR 14,23 IN	929.8	0.4	1.06
WW TC ON HTR 24,23 IN	903.7	0.1	0.80
WW TC ON HTR 28,23 IN	916.4	0.5	0.93
WW TC ON HTR 31,23 IN	906.2	0.2	0.82
WW TC ON ROD 01,25 IN	946.1	0.4	1.23
WW TC ON ROD 02,25 IN	926.5	0.4	1.03
WW TC ON ROD 05,25 IN	937.5	0.2	1.14
WW TC ON ROD 08,25 IN	907.8	0.4	0.84
WW TC ON ROD 14,25 IN	919.5	0.3	0.96
WW TC ON ROD 04,27 IN	930.4	0.5	1.07

Test 11, run 115 (continued)

INSTRUMENT	20-SEC AVG	STD DEV	NORMALIZED TEMP
WW TC ON ROD 07,27 IN	939.7	0.4	1.16
WW TC ON ROD 12,27 IN	915.4	0.9	0.92
WW TC ON ROD 16,27 IN	905.4	0.3	0.82
WW TC ON ROD 18,27 IN	914.7	0.4	0.91
WW TC ON ROD 03,29 IN	940.0	0.4	1.17
WW TC ON ROD 06,29 IN	937.1	0.4	1.14
WW TC ON ROD 10,29 IN	918.1	0.4	0.95
WW TC ON ROD 01,37 IN	937.4	0.3	1.14
WW TC ON ROD 02,37 IN	921.1	0.3	0.98
WW TC ON ROD 08,37 IN	913.6	0.2	0.90
WW TC ON ROD 14,37 IN	927.9	0.4	1.04
WW TC ON ROD 04,51 IN	930.0	0.3	1.07
WW TC ON ROD 07,51 IN	930.7	0.5	1.07
WW TC ON ROD 12,51 IN	918.7	0.4	0.95
WW TC ON ROD 16,51 IN	920.1	0.2	0.97
WW TC ON ROD 18,51 IN	917.0	0.3	0.93
WW TC ON ROD 03,63 IN	931.5	0.4	1.08
WW TC ON ROD 06,63 IN	924.7	0.4	1.01
WW TC ON ROD 10,63 IN	924.5	0.7	1.01
DUCT THERMOCOUPLES			
DUCT WALL TC,CH 38,19 IN(DEG F)	885.8	0.4	0.62
DUCT WALL TC,CH 53,19 IN	886.3	0.2	0.62
DUCT WALL TC,CH 28,21 IN	898.6	0.5	0.75
DUCT WALL TC,CH 43,21 IN	900.2	0.5	0.76
DUCT WALL TC,CH 44,21 IN	897.1	0.4	0.73
TEST SECTION HOUSING THERMOCOUPLES			
TS SHELL-BOT(DEG F)	831.8	1.4	
TS GUARD HTR-BOT	816.3	0.5	
TS HTR-BOT	775.7	0.5	
TS SHELL-LOW CTR	894.4	0.3	
TS GUARD HTR-LOW CTR	880.6	0.3	
TS HTR-LOW CTR	782.0	0.4	
TS SHELL-UP CTR	919.1	0.6	
TS GUARD HTR-UP CTR	895.8	0.4	
TS HTR-UP CTR	850.1	0.4	
TS SHELL-TOP	923.1	0.5	
TS GUARD HTR-TOP	915.5	0.7	
TS HTR-TOP	855.7	0.5	
REFERENCE BOX THERMOCOUPLES			
150 DEG REF BOX 1(DEG F)	150.5	0.4	
150 DEG REF BOX 2	152.1	0.4	
150 DEG REF BOX 3	154.5	0.4	
150 DEG REF BOX 4	152.7	0.4	
150 DEG REF BOX 5	150.5	0.4	
MISCELLANEOUS			
SOD PUMP SPEED(RPM)	2865.6	30.3	
EXPANSION TANK LEVEL(% FULL)	74.7	0.1	

TEST SERIES 10(BUNDLE 3C); TEST 11 RUN 116 03/02/78 10 45 34

CONDITIONS:

TEST SECTION FLOW: 4.53 L/S (71.6 GPM)

TEST SECTION POWER

19 CENTRAL HEATERS: 167.3 KW (16.5 KW/M/ROD) (5.0 KW/FT/ROD)

12 EDGE HEATERS: 105.2 KW (16.4 KW/M/ROD) (5.0 KW/FT/ROD)

TOTAL(31 HEATERS): 272.6 KW

TEST SECTION INLET TEMPERATURE: 444 DEG C (831 DEG F)

TEST SECTION OUTLET TEMPERATURE: 500 DEG C (932 DEG F)

HEAT BALANCE:

HEAT INPUT FROM 31 FUEL PIN SIMULATORS: 272.6 KW

HEAT ABSORBED BY SODIUM=

FLOW X SP.HEAT X (TS OUT TEMP - TS IN TEMP) 273.5 KW

% OF INPUT HEAT ACCOUNTED FOR: 100.3 %

INSTRUMENT	20-SEC AVG	STD DEV
HEATER POWER-CENTRAL RODS(KW)		
HTR POWER IN ROD 1	8.8	0.0
HTR POWER IN RODS 8,9,10	26.4	0.0
HTR POWER IN RODS 14,15,16	26.4	0.1
HTR POWER IN RODS 2,3,11,19	35.2	0.1
HTR POWER IN RODS 5,6,13,17	35.2	0.0
HTR POWER IN RODS 4,7,12,18	35.2	0.0
HEATER POWER-EDGE RODS(KW)		
HTR POWER IN RODS 30,31	17.2	0.0
HTR POWER IN RODS 24,25,27,28	34.7	0.0
HTR POWER IN RODS 33,34	17.7	0.0
HTR POWER IN RODS 21,22,36,37	35.7	0.0
FLOWS		
TEST SECTION(TS) FLOW IN(GPM)	71.6	0.1
TS FLOW OUT(GPM)	72.3	0.2
TS BYPASS FLOW(GPM)	-0.0	0.1
LOOP FLOW TOTAL(GPM)	71.4	0.5
RADIATOR AIR FLOW(CFM)	11.7	0.7
PRESSURES		
TS IN PRESS(PSIG)	98.3	0.1
TS OUT PRESS(PSIG)	8.4	0.1
PUMP OUT PRESS(PSIG)	95.2	0.1
TS LINE PRESS IN(PSIG)	99.0	0.1
EXP TANK ARGON PRESS(PSIG)	5.3	0.1
TS BYP LINE PRESS IN(PSIG)	100.2	0.1
TS BYP LINE PRESS OUT(PSIG)	9.4	0.1

Test 11, run 116 (continued)

INSTRUMENT	20-SEC AVG	STD DEV	NORMALIZED TEMP
LOOP THERMOCOUPLES			
TEST SECT INLET WELL(DEG F)	831.3	0.7	
TEST SECT OUTLET WELL(DEG F)	932.6	1.3	
PUMP IN PIPE WALL TC	832.5	4.9	
PUMP OUT PIPE WALL TC	825.7	0.5	
RAD IN PIPE WALL TC	871.3	2.3	
RAD OUT PIPE WALL TC	826.7	0.9	
HEATER INTERNAL THERMOCOUPLES			
HTR TC IN HTR 08,12AB IN(DEG F)	940.0	0.3	1.07
HTR TC IN HTR 13,12AB IN	929.6	0.5	0.97
HTR TC IN HTR 18,12AB IN	940.1	0.4	1.07
HTR TC IN HTR 22,12AB IN	938.9	0.6	1.06
HTR TC IN HTR 08,12BC IN	936.5	0.5	1.04
HTR TC IN HTR 13,12BC IN	928.8	0.5	0.96
HTR TC IN HTR 18,12BC IN	940.7	0.5	1.08
HTR TC IN HTR 22,12BC IN	934.7	0.4	1.02
HTR TC IN HTR 09,15AB IN	964.1	0.6	1.31
HTR TC IN HTR 10,15AB IN	953.3	0.4	1.20
HTR TC IN HTR 16,15BC IN	946.4	0.4	1.14
HTR TC IN HTR 25,15BC IN	944.6	0.4	1.12
HTR TC IN HTR 02,15.1 IN	967.8	0.5	1.35
HTR TC IN HTR 03,15.1 IN	974.7	0.6	1.42
HTR TC IN HTR 06,15.1 IN	969.7	0.7	1.37
HTR TC IN HTR 15,15.1 IN	963.8	1.4	1.31
HTR TC IN HTR 24,15.1 IN	949.8	0.2	1.17
HTR TC IN HTR 33,15.1 IN	952.5	0.3	1.20
HTR TC IN HTR 36,15.1 IN	947.7	0.7	1.15
HTR TC IN HTR 02,15.4 IN	979.6	0.4	1.46
HTR TC IN HTR 03,15.4 IN	987.5	0.9	1.54
HTR TC IN HTR 06,15.4 IN	971.6	0.5	1.38
HTR TC IN HTR 15,15.4 IN	957.5	0.5	1.25
HTR TC IN HTR 24,15.4 IN	958.9	0.3	1.26
HTR TC IN HTR 33,15.4 IN	954.4	0.4	1.22
HTR TC IN HTR 34,15.4 IN	947.9	0.5	1.15
HTR TC IN HTR 36,15.4 IN	948.2	0.4	1.15
HTR TC IN HTR 02,15.6 IN	980.7	0.5	1.48
HTR TC IN HTR 03,15.6 IN	988.5	0.6	1.55
HTR TC IN HTR 06,15.6 IN	982.3	1.0	1.49
HTR TC IN HTR 15,15.6 IN	956.0	0.4	1.23
HTR TC IN HTR 24,15.6 IN	958.1	0.3	1.25
HTR TC IN HTR 33,15.6 IN	953.1	0.3	1.20
HTR TC IN HTR 34,15.6 IN	950.3	0.7	1.17
HTR TC IN HTR 36,15.6 IN	943.2	0.3	1.10
HTR TC IN HTR 03,15.9 IN	969.8	0.5	1.37
HTR TC IN HTR 06,15.9 IN	1000.4	0.4	1.67
HTR TC IN HTR 15,15.9 IN	949.3	1.6	1.17
HTR TC IN HTR 24,15.9 IN	958.3	0.3	1.25
HTR TC IN HTR 33,15.9 IN	949.9	0.2	1.17
HTR TC IN HTR 34,15.9 IN	947.6	0.4	1.15

Test 11, run 116 (continued)

INSTRUMENT	20-SEC AVG	STD DEV	NORMALIZED TEMP
HTR TC IN HTR 36,15.9 IN	940.8	0.3	1.08
HTR TC IN HTR 04,16.1 IN	974.3	0.6	1.41
HTR TC IN HTR 05,16.1 IN	972.1	0.5	1.39
HTR TC IN HTR 07,16.1 IN	975.1	0.5	1.42
HTR TC IN HTR 21,16.1 IN	950.0	0.3	1.17
HTR TC IN HTR 27,16.1 IN	959.9	0.3	1.27
HTR TC IN HTR 04,16.4 IN	987.7	0.6	1.54
HTR TC IN HTR 05,16.4 IN	973.3	0.6	1.40
HTR TC IN HTR 07,16.4 IN	974.8	0.5	1.42
HTR TC IN HTR 21,16.4 IN	953.3	0.4	1.20
HTR TC IN HTR 27,16.4 IN	965.9	0.6	1.33
HTR TC IN HTR 04,16.6 IN	988.4	0.8	1.55
HTR TC IN HTR 05,16.6 IN	974.9	0.4	1.42
HTR TC IN HTR 07,16.6 IN	971.3	0.5	1.38
HTR TC IN HTR 21,16.6 IN	956.2	0.8	1.23
HTR TC IN HTR 27,16.6 IN	963.9	0.5	1.31
HTR TC IN HTR 04,16.9 IN	976.1	0.4	1.43
HTR TC IN HTR 07,16.9 IN	970.2	0.6	1.37
HTR TC IN HTR 21,16.9 IN	952.8	0.4	1.20
HTR TC IN HTR 27,16.9 IN	957.5	0.5	1.25
HTR TC IN HTR 11,18AB IN	972.5	0.5	1.39
HTR TC IN HTR 12,18AB IN	965.4	0.5	1.32
HTR TC IN HTR 14,18AB IN	950.0	0.6	1.17
HTR TC IN HTR 30,18AB IN	1345.4	0.8	5.07
HTR TC IN HTR 11,18BC IN	972.4	0.5	1.39
HTR TC IN HTR 12,18BC IN	966.4	0.5	1.33
HTR TC IN HTR 14,18BC IN	959.5	0.5	1.27
HTR TC IN HTR 17,18BC IN	973.7	0.4	1.41
HTR TC IN HTR 30,18BC IN	1336.9	1.0	4.99
WIRE WRAP THERMOCOUPLES			
WW TC ON HTR 12,-1 IN(DEG F)	835.4	0.6	0.04
WW TC ON HTR 16,-1 IN	833.8	0.5	0.02
WW TC ON HTR 12,01 IN	842.6	10.1	0.11
WW TC ON HTR 16,09 IN	890.4	0.4	0.58
WW TC ON HTR 04,11 IN	903.6	0.4	0.71
WW TC ON HTR 05,11 IN	896.9	0.4	0.65
WW TC ON HTR 13,11 IN	896.5	0.4	0.64
WW TC ON HTR 17,11 IN	897.2	0.5	0.65
WW TC ON HTR 28,11 IN	892.2	0.6	0.60
WW TC ON HTR 31,11 IN	895.1	0.4	0.63
WW TC ON HTR 03,13 IN	905.7	0.5	0.73
WW TC ON HTR 11,13 IN	910.4	0.5	0.78
WW TC ON HTR 13,13 IN	907.1	0.3	0.75
WW TC ON HTR 15,13 IN	904.3	0.7	0.72
WW TC ON HTR 17,13 IN	908.8	0.7	0.76
WW TC ON HTR 22,13 IN	905.1	0.5	0.73
WW TC ON HTR 01,15 IN	924.9	0.5	0.92
WW TC ON HTR 03,15 IN	924.1	0.4	0.92

Test 11, run 116 (continued)

INSTRUMENT	20-SEC AVG	STD DEV	NORMALIZED TEMP
WW TC ON HTR 08,15 IN	915.4	0.3	0.83
WW TC ON HTR 10,15 IN	917.1	0.4	0.85
WW TC ON HTR 15,15 IN	915.7	0.9	0.83
WW TC ON HTR 19,15 IN	917.6	0.4	0.85
WW TC ON HTR 25,15 IN	901.4	1.8	0.69
WW TC ON HTR 36,15 IN	894.7	0.3	0.63
WW TC ON HTR 01,17 IN	937.3	0.9	1.05
WW TC AJ HTR 02,17 IN	927.8	1.3	0.95
WW TC OP HTR 02,17 IN	928.6	0.4	0.96
WW TC ON HTR 08,17 IN	920.7	0.4	0.88
WW TC ON HTR 10,17 IN	921.3	0.5	0.89
WW TC ON HTR 11,17 IN	920.6	0.4	0.88
WW TC ON HTR 18,17 IN	926.7	0.4	0.94
WW TC ON HTR 19,17 IN	925.8	1.7	0.93
WW TC ON HTR 21,17 IN	926.0	0.4	0.94
WW TC ON HTR 22,17 IN	927.6	0.6	0.95
WW TC ON HTR 33,17 IN	900.3	0.4	0.68
WW TC ON HTR 37,17 IN	911.7	0.5	0.79
WW TC ON HTR 06,19 IN	952.4	0.4	1.20
WW TC AJ HTR 07,19 IN	936.1	0.6	1.03
WW TC OP HTR 07,19 IN	939.2	0.4	1.07
WW TC ON HTR 09,19 IN	944.9	0.5	1.12
WW TC ON HTR 14,19 IN	924.4	0.3	0.92
WW TC ON HTR 18,19 IN	935.6	0.4	1.03
WW TC ON HTR 27,19 IN	905.2	0.5	0.73
WW TC ON HTR 30,19 IN	910.2	0.4	0.78
WW TC ON HTR 34,19 IN	927.6	0.3	0.95
WW TC ON HTR 36,19 IN	924.1	0.6	0.92
WW TC ON HTR 37,19 IN	910.7	0.4	0.78
WW TC ON HTR 05,21 IN	956.6	1.2	1.24
WW TC ON HTR 06,21 IN	958.3	0.4	1.25
WW TC ON HTR 21,21 IN	926.4	0.5	0.94
WW TC ON HTR 24,21 IN	916.0	0.7	0.84
WW TC ON HTR 25,21 IN	911.7	0.9	0.79
WW TC ON HTR 27,21 IN	921.8	0.4	0.89
WW TC ON HTR 30,21 IN	931.6	0.8	0.99
WW TC ON HTR 33,21 IN	939.2	0.3	1.07
WW TC ON HTR 34,21 IN	924.8	0.5	0.92
WW TC ON HTR 04,23 IN	953.8	0.7	1.21
WW TC ON HTR 09,23 IN	938.2	0.5	1.05
WW TC ON HTR 14,23 IN	937.4	0.3	1.05
WW TC ON HTR 24,23 IN	915.1	0.4	0.83
WW TC ON HTR 28,23 IN	926.1	1.1	0.94
WW TC ON HTR 31,23 IN	917.5	0.4	0.85
WW TC ON ROD 01,25 IN	952.2	0.4	1.19
WW TC ON ROD 02,25 IN	935.0	0.5	1.02
WW TC ON ROD 05,25 IN	945.0	0.3	1.12
WW TC ON ROD 08,25 IN	918.2	0.4	0.86
WW TC ON ROD 14,25 IN	929.3	0.9	0.97
WW TC ON ROD 04,27 IN	938.7	0.5	1.06

Test 11, run 116 (continued)

INSTRUMENT	20-SEC AVG	STD DEV	NORMALIZED TEMP
WW TC ON ROD 07,27 IN	947.2	0.4	1.14
WW TC ON ROD 12,27 IN	925.3	0.4	0.93
WW TC ON ROD 16,27 IN	916.9	0.4	0.84
WW TC ON ROD 18,27 IN	925.9	0.2	0.93
WW TC ON ROD 03,29 IN	946.8	0.4	1.14
WW TC ON ROD 06,29 IN	944.5	0.4	1.12
WW TC ON ROD 10,29 IN	927.9	0.4	0.95
WW TC ON ROD 01,37 IN	944.4	0.4	1.12
WW TC ON ROD 02,37 IN	930.5	0.4	0.98
WW TC ON ROD 08,37 IN	923.8	0.4	0.91
WW TC ON ROD 14,37 IN	936.8	0.3	1.04
WW TC ON ROD 04,51 IN	937.7	0.3	1.05
WW TC ON ROD 07,51 IN	939.5	0.4	1.07
WW TC ON ROD 12,51 IN	928.7	0.4	0.96
WW TC ON ROD 16,51 IN	930.1	0.2	0.97
WW TC ON ROD 18,51 IN	927.5	0.7	0.95
WW TC ON ROD 03,63 IN	939.4	0.4	1.07
WW TC ON ROD 06,63 IN	934.1	0.3	1.02
WW TC ON ROD 10,63 IN	934.1	0.3	1.01
DUCT THERMOCOUPLES			
DUCT WALL TC,CH 38,19 IN(DEG F)	895.5	0.2	0.63
DUCT WALL TC,CH 53,19 IN	897.1	0.2	0.65
DUCT WALL TC,CH 28,21 IN	909.4	0.3	0.77
DUCT WALL TC,CH 43,21 IN	911.0	0.3	0.79
DUCT WALL TC,CH 44,21 IN	907.6	0.4	0.75
TEST SECTION HOUSING THERMOCOUPLES			
TS SHELL-BOT(DEG F)	837.9	1.4	
TS GUARD HTR-BOT	818.7	0.6	
TS HTR-BOT	777.5	0.4	
TS SHELL-LOW CTR	904.1	0.6	
TS GUARD HTR-LOW CTR	885.2	0.5	
TS HTR-LOW CTR	782.2	0.4	
TS SHELL-UP CTR	928.4	0.5	
TS GUARD HTR-UP CTR	896.6	0.4	
TS HTR-UP CTR	845.8	0.5	
TS SHELL-TOP	931.9	0.6	
TS GUARD HTR-TOP	918.6	0.5	
TS HTR-TOP	850.2	0.4	
REFERENCE BOX THERMOCOUPLES			
150 DEG REF BOX 1(DEG F)	150.5	0.5	
150 DEG REF BOX 2	151.3	0.3	
150 DEG REF BOX 3	154.3	0.4	
150 DEG REF BOX 4	152.4	0.4	
150 DEG REF BOX 5	150.1	0.4	
MISCELLANEOUS			
SOD PUMP SPEED(RPM)	2875.6	38.9	
EXPANSION TANK LEVEL(% FULL)	74.6	0.1	

TEST SERIES 10(BUNDLE 3C); TEST 11 RUN 117 03/02/78 14 32 24

CONDITIONS:

TEST SECTION FLOW: 4.60 L/S (72.7 GPM)

TEST SECTION POWER

19 CENTRAL HEATERS: 168.4 KW (16.6 KW/M/ROD) (5.1 KW/FT/ROD)

12 EDGE HEATERS: 115.6 KW (18.1 KW/M/ROD) (5.5 KW/FT/ROD)

TOTAL(31 HEATERS): 284.0 KW

TEST SECTION INLET TEMPERATURE: 444 DEG C (832 DEG F)

TEST SECTION OUTLET TEMPERATURE: 502 DEG C (936 DEG F)

HEAT BALANCE:

HEAT INPUT FROM 31 FUEL PIN SIMULATORS: 284.0 KW

HEAT ABSORBED BY SODIUM=

FLOW X SP.HEAT X (TS OUT TEMP - TS IN TEMP) 286.7 KW

% OF INPUT HEAT ACCOUNTED FOR: 100.9 %

INSTRUMENT	20-SEC AVG	STD DEV
HEATER POWER-CENTRAL RODS(KW)		
HTR POWER IN ROD 1	8.9	0.0
HTR POWER IN RODS 8,9,10	26.7	0.0
HTR POWER IN RODS 14,15,16	26.6	0.0
HTR POWER IN RODS 2,3,11,19	35.2	0.0
HTR POWER IN RODS 5,6,13,17	35.5	0.0
HTR POWER IN RODS 4,7,12,18	35.5	0.0
HEATER POWER-EDGE RODS(KW)		
HTR POWER IN RODS 30,31	19.1	0.0
HTR POWER IN RODS 24,25,27,28	38.6	0.0
HTR POWER IN RODS 33,34	19.2	0.0
HTR POWER IN RODS 21,22,36,37	38.7	0.0
FLOWS		
TEST SECTION(TS) FLOW IN(GPM)	72.7	0.1
TS FLOW OUT(GPM)	73.3	0.3
TS BYPASS FLOW(GPM)	0.5	0.1
LOOP FLOW TOTAL(GPM)	72.3	0.5
RADIATOR AIR FLOW(CFM)	13.8	0.9
PRESSURES		
TS IN PRESS(PSIG)	97.9	0.1
TS OUT PRESS(PSIG)	8.4	0.1
PUMP OUT PRESS(PSIG)	94.8	0.1
TS LINE PRESS IN(PSIG)	98.6	0.1
EXP TANK ARGON PRESS(PSIG)	5.3	0.1
TS BYP LINE PRESS IN(PSIG)	99.8	0.1
TS BYP LINE PRESS OUT(PSIG)	9.4	0.1

Test 11, run 117 (continued)

INSTRUMENT	20-SEC AVG	STD DEV	NORMALIZED TEMP
LOOP THERMOCOLPLES			
TEST SECT INLET WELL(DEG F)	832.1	0.9	
TEST SECT OUTLET WELL(DEG F)	936.7	0.4	
PUMP IN PIPE WALL TC	833.9	4.2	
PUMP OUT PIPE WALL TC	827.5	0.5	
RAD IN PIPE WALL TC	875.2	3.1	
RAD OUT PIPE WALL TC	828.6	1.4	
HEATER INTERNAL THERMOCOUPLES			
HTR TC IN HTR 08,12AB IN(DEG F)	942.4	0.4	1.05
HTR TC IN HTR 13,12AB IN	931.0	0.5	0.95
HTR TC IN HTR 18,12AB IN	943.3	0.4	1.06
HTR TC IN HTR 22,12AB IN	946.6	0.6	1.09
HTR TC IN HTR 08,12BC IN	938.1	0.5	1.01
HTR TC IN HTR 13,12BC IN	932.8	0.8	0.96
HTR TC IN HTR 18,12BC IN	943.6	0.5	1.07
HTR TC IN HTR 22,12BC IN	941.8	0.4	1.05
HTR TC IN HTR 09,15AB IN	964.3	0.6	1.26
HTR TC IN HTR 10,15AB IN	956.1	0.6	1.19
HTR TC IN HTR 16,15BC IN	949.9	0.4	1.13
HTR TC IN HTR 25,15BC IN	955.5	1.0	1.18
HTR TC IN HTR 02,15.1 IN	969.0	0.5	1.31
HTR TC IN HTR 03,15.1 IN	971.8	0.6	1.34
HTR TC IN HTR 06,15.1 IN	970.5	0.7	1.32
HTR TC IN HTR 15,15.1 IN	966.0	0.5	1.28
HTR TC IN HTR 24,15.1 IN	958.3	0.4	1.21
HTR TC IN HTR 33,15.1 IN	960.3	0.4	1.23
HTR TC IN HTR 36,15.1 IN	956.5	0.8	1.19
HTR TC IN HTR 02,15.4 IN	981.4	0.6	1.43
HTR TC IN HTR 03,15.4 IN	981.8	0.6	1.43
HTR TC IN HTR 06,15.4 IN	973.3	0.5	1.35
HTR TC IN HTR 15,15.4 IN	957.0	0.5	1.19
HTR TC IN HTR 24,15.4 IN	968.0	0.3	1.30
HTR TC IN HTR 33,15.4 IN	964.1	0.7	1.26
HTR TC IN HTR 34,15.4 IN	956.3	1.3	1.19
HTR TC IN HTR 36,15.4 IN	956.9	0.8	1.19
HTR TC IN HTR 02,15.6 IN	980.8	0.6	1.42
HTR TC IN HTR 03,15.6 IN	979.9	0.5	1.41
HTR TC IN HTR 06,15.6 IN	983.2	0.4	1.45
HTR TC IN HTR 15,15.6 IN	956.0	0.5	1.18
HTR TC IN HTR 24,15.6 IN	967.7	0.4	1.30
HTR TC IN HTR 33,15.6 IN	962.8	0.7	1.25
HTR TC IN HTR 34,15.6 IN	958.3	1.1	1.21
HTR TC IN HTR 36,15.6 IN	951.6	0.4	1.14
HTR TC IN HTR 03,15.9 IN	965.1	0.5	1.27
HTR TC IN HTR 06,15.9 IN	999.3	0.8	1.60
HTR TC IN HTR 15,15.9 IN	951.0	0.5	1.14
HTR TC IN HTR 24,15.9 IN	967.9	0.3	1.30
HTR TC IN HTR 33,15.9 IN	956.9	0.4	1.19
HTR TC IN HTR 34,15.9 IN	956.1	0.7	1.19

Test 11, run 117 (continued)

INSTRUMENT	20-SEC AVG	STD DEV	NORMALIZED TEMP
HTR TC IN HTR 36,15.9 IN	949.3	0.4	1.12
HTR TC IN HTR 04,16.1 IN	973.5	0.5	1.35
HTR TC IN HTR 05,16.1 IN	972.5	0.5	1.34
HTR TC IN HTR 07,16.1 IN	976.6	0.5	1.38
HTR TC IN HTR 21,16.1 IN	959.5	0.5	1.22
HTR TC IN HTR 27,16.1 IN	968.8	0.4	1.31
HTR TC IN HTR 04,16.4 IN	987.6	0.5	1.49
HTR TC IN HTR 05,16.4 IN	973.5	0.4	1.35
HTR TC IN HTR 07,16.4 IN	976.4	0.4	1.38
HTR TC IN HTR 21,16.4 IN	963.9	1.6	1.26
HTR TC IN HTR 27,16.4 IN	976.3	0.7	1.38
HTR TC IN HTR 04,16.6 IN	988.6	0.7	1.50
HTR TC IN HTR 05,16.6 IN	975.7	0.5	1.37
HTR TC IN HTR 07,16.6 IN	971.3	0.3	1.33
HTR TC IN HTR 21,16.6 IN	966.0	0.5	1.28
HTR TC IN HTR 27,16.6 IN	974.1	0.7	1.36
HTR TC IN HTR 04,16.9 IN	974.6	0.5	1.36
HTR TC IN HTR 07,16.9 IN	972.2	0.5	1.34
HTR TC IN HTR 21,16.9 IN	961.7	0.4	1.24
HTR TC IN HTR 27,16.9 IN	965.7	0.5	1.28
HTR TC IN HTR 11,18AB IN	972.2	0.5	1.34
HTR TC IN HTR 12,18AB IN	967.6	0.5	1.30
HTR TC IN HTR 14,18AB IN	955.3	0.5	1.18
HTR TC IN HTR 30,18AB IN	1438.1	0.6	5.79
HTR TC IN HTR 11,18BC IN	973.0	0.5	1.35
HTR TC IN HTR 12,18BC IN	969.4	0.6	1.31
HTR TC IN HTR 14,18BC IN	963.7	0.7	1.26
HTR TC IN HTR 17,18BC IN	976.2	0.4	1.38
HTR TC IN HTR 30,18BC IN	1427.6	0.7	5.69
WIRE WRAP THERMOCOUPLES			
WW TC ON HTR 12,-1 IN(DEG F)	837.2	0.6	0.05
WW TC ON HTR 16,-1 IN	835.6	0.4	0.03
WW TC ON HTR 12,01 IN	844.9	6.1	0.12
WW TC ON HTR 16,09 IN	891.8	0.5	0.57
WW TC ON HTR 04,11 IN	903.8	0.5	0.69
WW TC ON HTR 05,11 IN	897.2	0.3	0.62
WW TC ON HTR 13,11 IN	898.1	0.8	0.63
WW TC ON HTR 17,11 IN	899.6	0.3	0.65
WW TC ON HTR 28,11 IN	895.3	0.5	0.60
WW TC ON HTR 31,11 IN	900.4	0.4	0.65
WW TC ON HTR 03,13 IN	906.1	0.4	0.71
WW TC ON HTR 11,13 IN	911.7	0.4	0.76
WW TC ON HTR 13,13 IN	909.7	0.5	0.74
WW TC ON HTR 15,13 IN	908.4	0.5	0.73
WW TC ON HTR 17,13 IN	912.2	0.5	0.77
WW TC ON HTR 22,13 IN	911.8	0.5	0.76
WW TC ON HTR 01,15 IN	923.9	0.4	0.88
WW TC ON HTR 03,15 IN	922.3	0.5	0.86

Test 11, run 117 (continued)

INSTRUMENT	20-SEC AVG	STD DEV	NORMALIZED TEMP
WW TC ON HTR 08,15 IN	917.7	0.4	0.82
WW TC ON HTR 10,15 IN	919.2	0.4	0.83
WW TC ON HTR 15,15 IN	920.2	0.3	0.84
WW TC ON HTR 19,15 IN	919.4	0.3	0.83
WW TC ON HTR 25,15 IN	904.5	0.3	0.69
WW TC ON HTR 36,15 IN	897.8	0.3	0.63
WW TC ON HTR 01,17 IN	936.7	0.5	1.00
WW TC AJ HTR 02,17 IN	928.3	0.4	0.92
WW TC OP HTR 02,17 IN	930.1	0.3	0.94
WW TC ON HTR 08,17 IN	922.4	0.4	0.86
WW TC ON HTR 10,17 IN	923.3	0.4	0.87
WW TC ON HTR 11,17 IN	924.1	0.4	0.88
WW TC ON HTR 18,17 IN	928.6	1.1	0.92
WW TC ON HTR 19,17 IN	927.1	0.5	0.91
WW TC ON HTR 21,17 IN	930.8	0.4	0.94
WW TC ON HTR 22,17 IN	930.7	0.4	0.94
WW TC ON HTR 33,17 IN	906.0	0.5	0.71
WW TC ON HTR 37,17 IN	918.5	0.8	0.83
WW TC ON HTR 06,19 IN	954.0	0.6	1.17
WW TC AJ HTR 07,19 IN	937.1	0.4	1.00
WW TC OP HTR 07,19 IN	940.9	0.4	1.04
WW TC ON HTR 09,19 IN	946.3	0.6	1.09
WW TC ON HTR 14,19 IN	929.9	0.4	0.94
WW TC ON HTR 18,19 IN	936.7	0.4	1.00
WW TC ON HTR 27,19 IN	912.7	0.4	0.77
WW TC ON HTR 30,19 IN	917.7	0.4	0.82
WW TC ON HTR 34,19 IN	934.1	0.4	0.97
WW TC ON HTR 36,19 IN	927.3	0.4	0.91
WW TC ON HTR 37,19 IN	916.3	0.4	0.81
WW TC ON HTR 05,21 IN	956.6	0.5	1.19
WW TC ON HTR 06,21 IN	959.8	0.5	1.22
WW TC ON HTR 21,21 IN	929.3	0.4	0.93
WW TC ON HTR 24,21 IN	921.9	0.4	0.86
WW TC ON HTR 25,21 IN	916.5	0.8	0.81
WW TC ON HTR 27,21 IN	929.5	0.5	0.93
WW TC ON HTR 30,21 IN	938.4	0.6	1.02
WW TC ON HTR 33,21 IN	944.5	0.5	1.07
WW TC ON HTR 34,21 IN	931.4	0.4	0.95
WW TC ON HTR 04,23 IN	954.1	0.4	1.17
WW TC ON HTR 09,23 IN	943.0	1.2	1.06
WW TC ON HTR 14,23 IN	940.4	0.5	1.04
WW TC ON HTR 24,23 IN	921.7	0.4	0.86
WW TC ON HTR 28,23 IN	932.0	0.4	0.96
WW TC ON HTR 31,23 IN	922.9	0.4	0.87
WW TC ON ROD 01,25 IN	953.3	0.4	1.16
WW TC ON ROD 02,25 IN	937.6	0.3	1.01
WW TC ON ROD 05,25 IN	947.2	0.4	1.10
WW TC ON ROD 08,25 IN	922.8	0.5	0.87
WW TC ON ROD 14,25 IN	933.2	0.4	0.97
WW TC ON ROD 04,27 IN	942.4	0.4	1.05

Test 11, run 117 (continued)

INSTRUMENT	20-SEC AVG	STD DEV	NORMALIZED TEMP
WW TC ON ROD 07,27 IN	948.7	0.5	1.12
WW TC ON ROD 12,27 IN	930.7	0.4	0.94
WW TC ON ROD 16,27 IN	922.7	0.4	0.87
WW TC ON ROD 18,27 IN	930.8	0.4	0.94
WW TC ON ROD 03,29 IN	948.5	0.4	1.11
WW TC ON ROD 06,29 IN	946.7	0.4	1.10
WW TC ON ROD 10,29 IN	932.5	0.4	0.96
WW TC ON ROD 01,37 IN	946.4	0.4	1.09
WW TC ON ROD 02,37 IN	933.6	0.4	0.97
WW TC ON ROD 08,37 IN	928.8	0.4	0.92
WW TC ON ROD 14,37 IN	940.1	0.4	1.03
WW TC ON ROD 04,51 IN	940.9	0.3	1.04
WW TC ON ROD 07,51 IN	942.8	0.4	1.06
WW TC ON ROD 12,51 IN	933.4	0.3	0.97
WW TC ON ROD 16,51 IN	934.2	0.3	0.98
WW TC ON ROD 18,51 IN	931.7	0.3	0.95
WW TC ON ROD 03,63 IN	943.0	0.4	1.06
WW TC ON ROD 06,63 IN	937.6	0.2	1.01
WW TC ON ROD 10,63 IN	937.6	0.3	1.01
DUCT THERMOCOUPLES			
DUCT WALL TC,CH 38,19 IN(DEG F)	900.2	0.4	0.65
DUCT WALL TC,CH 53,19 IN	902.1	0.2	0.67
DUCT WALL TC,CH 28,21 IN	913.5	0.3	0.78
DUCT WALL TC,CH 43,21 IN	917.7	0.3	0.82
DUCT WALL TC,CH 44,21 IN	913.7	0.3	0.78
TEST SECTION HOUSING THERMOCOUPLES			
TS SHELL-BOT(DEG F)	839.1	1.5	
TS GUARD HTR-BOT	816.5	1.1	
TS HTR-BOT	772.4	0.5	
TS SHELL-LOW CTR	907.8	0.5	
TS GUARD HTR-LOW CTR	884.5	0.4	
TS HTR-LOW CTR	776.6	0.8	
TS SHELL-UP CTR	932.3	0.7	
TS GUARD HTR-UP CTR	892.8	0.4	
TS HTR-UP CTR	838.4	0.3	
TS SHELL-TOP	936.1	0.4	
TS GUARD HTR-TOP	917.6	0.5	
TS HTR-TOP	843.0	0.5	
REFERENCE BOX THERMOCOUPLES			
150 DEG REF BOX 1(DEG F)	150.4	0.4	
150 DEG REF BOX 2	151.7	0.5	
150 DEG REF BOX 3	154.5	0.4	
150 DEG REF BOX 4	152.5	0.5	
150 DEG REF BOX 5	150.4	0.2	
MISCELLANEOUS			
SOD PUMP SPEED(RPM)	2869.0	27.6	
EXPANSION TANK LEVEL(% FULL)	74.1	0.2	

TEST SERIES 10(BUNDLE 3C); TEST 11 RUN 121 03/03/78 11 33 14

CONDITIONS:

TEST SECTION FLOW: 4.52 L/S (71.4 GPM)

TEST SECTION POWER

19 CENTRAL HEATERS:	284.5 KW	(28.1 KW/M/ROD)	(8.6 KW/FT/ROD)
12 EDGE HEATERS:	0.0 KW	(0.0 KW/M/ROD)	(0.0 KW/FT/ROD)
TOTAL(31 HEATERS):	284.5 KW		

TEST SECTION INLET TEMPERATURE: 447 DEG C (836 DEG F)

TEST SECTION OUTLET TEMPERATURE: 506 DEG C (943 DEG F)

HEAT BALANCE:

HEAT INPUT FROM 31 FUEL PIN SIMULATORS:	284.5 KW
HEAT ABSORBED BY SODIUM= FLOW X SP.HEAT X (TS OUT TEMP - TS IN TEMP)	286.0 KW
% OF INPUT HEAT ACCOUNTED FOR:	100.5 %

INSTRUMENT	20-SEC AVG	STD DEV
HEATER POWER-CENTRAL RODS(KW)		
HTR POWER IN ROD 1	14.8	0.0
HTR POWER IN RODS 8,9,10	45.3	0.0
HTR POWER IN RODS 14,15,16	45.1	0.0
HTR POWER IN RODS 2,3,11,19	59.6	0.0
HTR POWER IN RODS 5,6,13,17	60.0	0.0
HTR POWER IN RODS 4,7,12,18	59.6	0.0
HEATER POWER-EDGE RODS(KW)		
HTR POWER IN RODS 30,31	-0.0	0.0
HTR POWER IN RODS 24,25,27,28	-0.3	0.0
HTR POWER IN RODS 33,34	-0.0	0.0
HTR POWER IN RODS 21,22,36,37	0.0	0.0
FLOWS		
TEST SECTION(TS) FLOW IN(GPM)	71.4	0.1
TS FLOW OUT(GPM)	72.1	0.2
TS BYPASS FLOW(GPM)	1.2	0.2
LOOP FLOW TOTAL(GPM)	71.1	0.4
RADIATOR AIR FLOW(CFM)	13.1	0.7
PRESSURES		
TS IN PRESS(PSIG)	94.8	0.2
TS OUT PRESS(PSIG)	8.1	0.1
PUMP OUT PRESS(PSIG)	91.8	0.1
TS LINE PRESS IN(PSIG)	95.4	0.1
EXP TANK ARGON PRESS(PSIG)	4.8	0.1
TS BYP LINE PRESS IN(PSIG)	96.7	0.1
TS BYP LINE PRESS OUT(PSIG)	9.0	0.1

Test 11, run 121 (continued)

INSTRUMENT	20-SEC AVG	STD DEV	NORMALIZED TEMP
LOOP THERMOCOUPLES			
TEST SECT INLET WELL(DEG F)	836.9	0.5	
TEST SECT OUTLET WELL(DEG F)	943.2	0.4	
PUMP IN PIPE WALL TC	837.7	5.0	
PUMP OUT PIPE WALL TC	831.7	0.2	
RAD IN PIPE WALL TC	880.9	3.3	
RAD OUT PIPE WALL TC	832.2	1.6	
HEATER INTERNAL THERMOCOUPLES			
HTR TC IN HTR 08,12AB IN(DEG F)	1009.2	0.3	1.62
HTR TC IN HTR 13,12AB IN	955.1	0.6	1.11
HTR TC IN HTR 18,12AB IN	985.6	0.4	1.40
HTR TC IN HTR 22,12AB IN	897.4	0.4	0.57
HTR TC IN HTR 08,12BC IN	1002.7	0.3	1.56
HTR TC IN HTR 13,12BC IN	972.0	0.4	1.27
HTR TC IN HTR 18,12BC IN	987.5	0.4	1.42
HTR TC IN HTR 22,12BC IN	898.2	0.4	0.58
HTR TC IN HTR 09,15AB IN	1047.1	0.7	1.98
HTR TC IN HTR 10,15AB IN	1032.4	0.4	1.84
HTR TC IN HTR 16,15BC IN	989.5	1.0	1.44
HTR TC IN HTR 25,15BC IN	876.4	0.3	0.37
HTR TC IN HTR 02,15.1 IN	1062.3	1.0	2.12
HTR TC IN HTR 03,15.1 IN	1074.2	0.7	2.23
HTR TC IN HTR 06,15.1 IN	1069.2	0.5	2.19
HTR TC IN HTR 15,15.1 IN	1056.1	0.4	2.06
HTR TC IN HTR 24,15.1 IN	920.5	0.4	0.79
HTR TC IN HTR 33,15.1 IN	906.6	0.4	0.66
HTR TC IN HTR 36,15.1 IN	881.6	0.8	0.42
HTR TC IN HTR 02,15.4 IN	1082.2	0.6	2.31
HTR TC IN HTR 03,15.4 IN	1088.8	0.5	2.37
HTR TC IN HTR 06,15.4 IN	1073.1	0.5	2.22
HTR TC IN HTR 15,15.4 IN	1049.8	0.5	2.00
HTR TC IN HTR 24,15.4 IN	919.5	0.3	0.78
HTR TC IN HTR 33,15.4 IN	909.5	0.5	0.68
HTR TC IN HTR 34,15.4 IN	921.2	0.9	0.79
HTR TC IN HTR 36,15.4 IN	878.9	0.4	0.39
HTR TC IN HTR 02,15.6 IN	1081.7	0.5	2.30
HTR TC IN HTR 03,15.6 IN	1082.3	0.5	2.31
HTR TC IN HTR 06,15.6 IN	1089.5	0.4	2.38
HTR TC IN HTR 15,15.6 IN	1048.1	0.3	1.99
HTR TC IN HTR 24,15.6 IN	908.4	0.4	0.67
HTR TC IN HTR 33,15.6 IN	913.6	0.6	0.72
HTR TC IN HTR 34,15.6 IN	911.8	0.7	0.70
HTR TC IN HTR 36,15.6 IN	874.2	0.4	0.35
HTR TC IN HTR 03,15.9 IN	1057.5	0.7	2.08
HTR TC IN HTR 06,15.9 IN	1121.9	0.4	2.68
HTR TC IN HTR 15,15.9 IN	1035.8	0.4	1.87
HTR TC IN HTR 24,15.9 IN	908.4	0.4	0.67
HTR TC IN HTR 33,15.9 IN	910.3	0.3	0.69
HTR TC IN HTR 34,15.9 IN	907.2	1.2	0.66

Test 11, run 121 (continued)

INSTRUMENT	20-SEC AVG	STD DEV	NORMALIZED TEMP
HTR TC IN HTR 36,15.9 IN	871.9	0.5	0.33
HTR TC IN HTR 04,16.1 IN	1076.6	0.5	2.25
HTR TC IN HTR 05,16.1 IN	1069.8	0.6	2.19
HTR TC IN HTR 07,16.1 IN	1077.6	1.1	2.26
HTR TC IN HTR 21,16.1 IN	877.4	0.3	0.38
HTR TC IN HTR 27,16.1 IN	921.1	0.5	0.79
HTR TC IN HTR 04,16.4 IN	1087.8	0.4	2.36
HTR TC IN HTR 05,16.4 IN	1072.8	0.3	2.22
HTR TC IN HTR 07,16.4 IN	1077.6	0.6	2.26
HTR TC IN HTR 21,16.4 IN	904.6	0.8	0.64
HTR TC IN HTR 27,16.4 IN	937.5	0.6	0.95
HTR TC IN HTR 04,16.6 IN	1089.4	0.7	2.37
HTR TC IN HTR 05,16.6 IN	1076.9	0.6	2.26
HTR TC IN HTR 07,16.6 IN	1069.4	0.3	2.19
HTR TC IN HTR 21,16.6 IN	919.8	0.8	0.78
HTR TC IN HTR 27,16.6 IN	940.0	0.6	0.97
HTR TC IN HTR 04,16.9 IN	1080.8	0.5	2.29
HTR TC IN HTR 07,16.9 IN	1069.1	0.4	2.18
HTR TC IN HTR 21,16.9 IN	894.3	0.5	0.54
HTR TC IN HTR 27,16.9 IN	923.5	0.2	0.81
HTR TC IN HTR 11,18AB IN	1069.4	0.3	2.19
HTR TC IN HTR 12,18AB IN	1044.8	0.6	1.96
HTR TC IN HTR 14,18AB IN	981.4	0.5	1.36
HTR TC IN HTR 30,18AB IN	1682.6	1.1	7.96
HTR TC IN HTR 11,18BC IN	1069.6	0.3	2.19
HTR TC IN HTR 12,18BC IN	1048.4	0.5	1.99
HTR TC IN HTR 14,18BC IN	999.8	0.6	1.53
HTR TC IN HTR 17,18BC IN	1067.8	0.3	2.17
HTR TC IN HTR 30,18BC IN	1703.0	0.9	8.15
WIRE WRAP THERMOCOUPLES			
WW TC ON HTR 12,-1 IN(DEG F)	842.7	0.4	0.05
WW TC ON HTR 16,-1 IN	841.2	0.5	0.04
WW TC ON HTR 12,01 IN	855.6	0.3	0.18
WW TC ON HTR 16,09 IN	927.7	0.5	0.85
WW TC ON HTR 04,11 IN	956.5	0.5	1.12
WW TC ON HTR 05,11 IN	944.4	0.6	1.01
WW TC ON HTR 13,11 IN	942.6	0.4	0.99
WW TC ON HTR 17,11 IN	929.4	0.2	0.87
WW TC ON HTR 28,11 IN	903.2	0.4	0.62
WW TC ON HTR 31,11 IN	874.1	0.4	0.35
WW TC ON HTR 03,13 IN	952.8	0.5	1.09
WW TC ON HTR 11,13 IN	964.7	0.5	1.20
WW TC ON HTR 13,13 IN	949.9	0.3	1.06
WW TC ON HTR 15,13 IN	944.2	0.5	1.01
WW TC ON HTR 17,13 IN	937.4	0.3	0.95
WW TC ON HTR 22,13 IN	866.6	0.6	0.28
WW TC ON HTR 01,15 IN	994.5	1.0	1.48
WW TC ON HTR 03,15 IN	985.1	0.8	1.39

Test 11, run 121 (continued)

INSTRUMENT	20-SEC AVG	STD DEV	NORMALIZED TEMP
WW TC ON HTR 08,15 IN	955.9	0.4	1.12
WW TC ON HTR 10,15 IN	968.3	0.4	1.24
WW TC ON HTR 15,15 IN	943.5	0.4	1.00
WW TC ON HTR 19,15 IN	965.1	0.4	1.21
WW TC ON HTR 25,15 IN	880.1	0.8	0.41
WW TC ON HTR 36,15 IN	853.3	0.3	0.15
WW TC ON HTR 01,17 IN	1014.0	0.7	1.67
WW TC AJ HTR 02,17 IN	986.6	0.6	1.41
WW TC OP HTR 02,17 IN	994.6	0.5	1.48
WW TC ON HTR 08,17 IN	969.1	0.5	1.24
WW TC ON HTR 10,17 IN	956.8	0.4	1.13
WW TC ON HTR 11,17 IN	951.4	0.6	1.08
WW TC ON HTR 18,17 IN	975.6	0.6	1.30
WW TC ON HTR 19,17 IN	976.6	0.6	1.31
WW TC ON HTR 21,17 IN	898.5	0.6	0.58
WW TC ON HTR 22,17 IN	937.5	0.2	0.95
WW TC ON HTR 33,17 IN	857.5	0.4	0.19
WW TC ON HTR 37,17 IN	876.6	0.4	0.37
WW TC ON HTR 06,19 IN	1038.7	0.7	1.90
WW TC AJ HTR 07,19 IN	1008.2	0.5	1.61
WW TC OP HTR 07,19 IN	1018.3	0.8	1.71
WW TC ON HTR 09,19 IN	1014.6	0.5	1.67
WW TC ON HTR 14,19 IN	931.4	0.5	0.89
WW TC ON HTR 18,19 IN	991.1	0.5	1.45
WW TC ON HTR 27,19 IN	864.3	0.4	0.26
WW TC ON HTR 30,19 IN	869.9	0.4	0.31
WW TC ON HTR 34,19 IN	922.4	0.5	0.80
WW TC ON HTR 36,19 IN	908.8	0.4	0.68
WW TC ON HTR 37,19 IN	876.5	0.3	0.37
WW TC ON HTR 05,21 IN	1039.5	0.4	1.91
WW TC ON HTR 06,21 IN	1049.7	1.2	2.00
WW TC ON HTR 21,21 IN	895.2	0.6	0.55
WW TC ON HTR 24,21 IN	871.1	0.7	0.32
WW TC ON HTR 25,21 IN	873.5	0.7	0.34
WW TC ON HTR 27,21 IN	882.9	0.4	0.43
WW TC ON HTR 30,21 IN	924.3	0.2	0.82
WW TC ON HTR 33,21 IN	923.6	0.3	0.82
WW TC ON HTR 34,21 IN	896.2	0.4	0.56
WW TC ON HTR 04,23 IN	1040.4	0.6	1.91
WW TC ON HTR 09,23 IN	958.2	0.5	1.14
WW TC ON HTR 14,23 IN	974.2	0.9	1.29
WW TC ON HTR 24,23 IN	874.6	0.3	0.35
WW TC ON HTR 28,23 IN	912.4	0.5	0.71
WW TC ON HTR 31,23 IN	896.3	0.3	0.56
WW TC ON ROD 01,25 IN	1034.6	0.5	1.86
WW TC ON ROD 02,25 IN	969.7	0.2	1.25
WW TC ON ROD 05,25 IN	987.6	0.4	1.42
WW TC ON ROD 08,25 IN	897.4	0.6	0.57
WW TC ON ROD 14,25 IN	909.9	0.4	0.69
WW TC ON ROD 04,27 IN	968.4	0.5	1.24

Test 11, run 121 (continued)

INSTRUMENT	20-SEC AVG	STD DEV	NORMALIZED TEMP
WW TC ON ROD 07,27 IN	1010.9	0.4	1.64
WW TC ON ROD 12,27 IN	910.4	0.2	0.69
WW TC ON ROD 16,27 IN	892.3	0.3	0.52
WW TC ON ROD 18,27 IN	908.7	0.2	0.68
WW TC ON ROD 03,29 IN	1017.5	0.3	1.70
WW TC ON ROD 06,29 IN	987.5	0.4	1.42
WW TC ON ROD 10,29 IN	928.9	0.5	0.87
WW TC ON ROD 01,37 IN	1001.9	0.4	1.55
WW TC ON ROD 02,37 IN	937.8	0.4	0.95
WW TC ON ROD 08,37 IN	911.1	0.1	0.70
WW TC ON ROD 14,37 IN	947.4	0.3	1.04
WW TC ON ROD 04,51 IN	969.6	0.2	1.25
WW TC ON ROD 07,51 IN	967.3	0.5	1.23
WW TC ON ROD 12,51 IN	925.8	0.4	0.84
WW TC ON ROD 16,51 IN	935.0	0.2	0.92
WW TC ON ROD 18,51 IN	921.1	0.2	0.79
WW TC ON ROD 03,63 IN	976.4	0.7	1.31
WW TC ON ROD 06,63 IN	952.3	0.3	1.09
WW TC ON ROD 10,63 IN	950.0	0.3	1.06
DUCT THERMOCOUPLES			
DUCT WALL TC,CH 38,19 IN(DEG F)	872.3	0.4	0.33
DUCT WALL TC,CH 53,19 IN	864.8	0.2	0.26
DUCT WALL TC,CH 28,21 IN	884.7	0.1	0.45
DUCT WALL TC,CH 43,21 IN	876.3	0.3	0.37
DUCT WALL TC,CH 44,21 IN	880.8	0.4	0.41
TEST SECTION HOUSING THERMOCOUPLES			
TS SHELL-BOT(DEG F)	843.6	1.5	
TS GUARD HTR-BOT	820.3	0.6	
TS HTR-BOT	775.4	0.3	
TS SHELL-LOW CTR	879.8	0.3	
TS GUARD HTR-LOW CTR	868.9	0.3	
TS HTR-LOW CTR	771.1	0.5	
TS SHELL-UP CTR	918.9	0.8	
TS GUARD HTR-UP CTR	891.4	0.3	
TS HTR-UP CTR	843.5	0.3	
TS SHELL-TOP	938.7	0.5	
TS GUARD HTR-TOP	924.3	0.2	
TS HTR-TOP	851.9	0.4	
REFERENCE BOX THERMOCOUPLES			
150 DEG REF BOX 1(DEG F)	150.5	0.3	
150 DEG REF BOX 2	151.3	0.3	
150 DEG REF BOX 3	154.6	0.3	
150 DEG REF BOX 4	152.4	0.5	
150 DEG REF BOX 5	151.1	0.4	
MISCELLANEOUS			
SOD PUMP SPEED(RPM)	2821.3	36.8	
EXPANSION TANK LEVEL(% FULL)	73.5	0.1	

TEST SERIES 10(BUNDLE 3C); TEST 11 RUN 125 03/08/78 11 42 54

CONDITIONS:

TEST SECTION FLOW: 4.64 L/S (73.3 GPM)

TEST SECTICN POWER

19 CENTRAL HEATERS: 281.4 KW (27.8 KW/M/ROD) (8.5 KW/FT/ROD)

12 EDGE HEATERS: 160.9 KW (25.1 KW/M/ROD) (7.7 KW/FT/ROD)

TOTAL(31 HEATERS): 442.2 KW

TEST SECTION INLET TEMPERATURE: 584 DEG C (1084 DEG F)

TEST SECTION OUTLET TEMPERATURE: 673 DEG C (1244 DEG F)

HEAT BALANCE:

HEAT INPUT FROM 31 FUEL PIN SIMULATORS: 442.2 KW

HEAT ABSORBED BY SODIUM=

FLOW X SP.HEAT X (TS OUT TEMP - TS IN TEMP) 421.3 KW

% OF INPUT HEAT ACCOUNTED FOR: 95.3 %

INSTRUMENT	20-SEC AVG	STD DEV
HEATER POWER-CENTRAL RODS(KW)		
HTR POWER IN RCD 1	14.8	0.0
HTR POWER IN RODS 8,9,10	44.6	0.0
HTR POWER IN RODS 14,15,16	44.7	0.0
HTR POWER IN RODS 2,3,11,19	59.1	0.0
HTR POWER IN RODS 5,6,13,17	59.1	0.0
HTR POWER IN RODS 4,7,12,18	59.1	0.0
HEATER POWER-EDGE RODS(KW)		
HTR POWER IN RODS 30,31	26.8	0.0
HTR POWER IN RODS 24,25,27,28	53.5	0.0
HTR POWER IN RODS 33,34	26.8	0.1
HTR POWER IN RODS 21,22,36,37	53.8	0.0
FLOWS		
TEST SECTION(TS) FLOW IN(GPM)	73.3	0.1
TS FLOW OUT(GPM)	74.5	0.2
TS BYPASS FLOW(GPM)	-0.1	0.1
LOOP FLOW TOTAL(GPM)	73.0	0.5
RADIATOR AIR FLOW(CFM)	16.6	0.9
PRESSURES		
TS IN PRESS(PSIG)	87.6	0.1
TS OUT PRESS(PSIG)	8.2	0.1
PUMP OUT PRESS(PSIG)	84.7	0.1
TS LINE PRESS IN(PSIG)	88.6	0.1
EXP TANK ARGON PRESS(PSIG)	4.9	0.1
TS BYP LINE PRESS IN(PSIG)	89.6	0.1
TS BYP LINE PRESS OUT(PSIG)	8.9	0.1

Test 11, run 125 (continued)

INSTRUMENT	20-SEC AVG	STD DEV	NORMALIZED TEMP
LOOP THERMOCOUPLES			
TEST SECT INLET WELL(DEG F)	1084.6	0.8	
TEST SECT OUTLET WELL(DEG F)	1244.4	0.4	
PUMP IN PIPE WALL TC	1076.9	4.6	
PUMP OUT PIPE WALL TC	1076.6	0.4	
RAD IN PIPE WALL TC	1154.2	8.1	
RAD OUT PIPE WALL TC	1079.2	1.4	
HEATER INTERNAL THERMOCOUPLES			
HTR TC IN HTR 08,12AB IN(DEG F)	1261.3	0.5	1.11
HTR TC IN HTR 13,12AB IN	1248.8	0.4	1.03
HTR TC IN HTR 18,12AB IN	1263.7	0.3	1.12
HTR TC IN HTR 22,12AB IN	1246.0	0.4	1.01
HTR TC IN HTR 08,12BC IN	1253.6	0.3	1.06
HTR TC IN HTR 13,12BC IN	1251.1	0.3	1.04
HTR TC IN HTR 18,12BC IN	1265.3	0.3	1.13
HTR TC IN HTR 22,12BC IN	1242.7	0.5	0.99
HTR TC IN HTR 09,15AB IN	1292.9	0.3	1.30
HTR TC IN HTR 10,15AB IN	1284.1	0.4	1.25
HTR TC IN HTR 16,15BC IN	1276.0	0.4	1.20
HTR TC IN HTR 25,15BC IN	1259.2	0.4	1.09
HTR TC IN HTR 02,15.1 IN	1314.6	0.7	1.44
HTR TC IN HTR 03,15.1 IN	1317.4	0.8	1.46
HTR TC IN HTR 06,15.1 IN	1322.3	0.4	1.49
HTR TC IN HTR 15,15.1 IN	1305.1	0.7	1.38
HTR TC IN HTR 24,15.1 IN	1271.8	0.4	1.17
HTR TC IN HTR 33,15.1 IN	1272.1	0.3	1.17
HTR TC IN HTR 36,15.1 IN	1264.9	0.4	1.13
HTR TC IN HTR 02,15.4 IN	1335.9	0.7	1.57
HTR TC IN HTR 03,15.4 IN	1335.8	0.4	1.57
HTR TC IN HTR 06,15.4 IN	1326.6	0.5	1.51
HTR TC IN HTR 15,15.4 IN	1292.0	0.3	1.30
HTR TC IN HTR 24,15.4 IN	1289.8	0.4	1.28
HTR TC IN HTR 33,15.4 IN	1274.5	0.2	1.19
HTR TC IN HTR 34,15.4 IN	1264.8	2.2	1.13
HTR TC IN HTR 36,15.4 IN	1263.5	1.7	1.12
HTR TC IN HTR 02,15.6 IN	1334.2	0.6	1.56
HTR TC IN HTR 03,15.6 IN	1329.6	0.4	1.53
HTR TC IN HTR 06,15.6 IN	1344.2	0.6	1.62
HTR TC IN HTR 15,15.6 IN	1287.4	0.4	1.27
HTR TC IN HTR 24,15.6 IN	1285.6	0.4	1.26
HTR TC IN HTR 33,15.6 IN	1272.0	0.2	1.17
HTR TC IN HTR 34,15.6 IN	1269.6	1.1	1.16
HTR TC IN HTR 36,15.6 IN	1255.1	0.4	1.07
HTR TC IN HTR 03,15.9 IN	1299.1	0.6	1.34
HTR TC IN HTR 06,15.9 IN	1347.5	0.4	1.65
HTR TC IN HTR 15,15.9 IN	1282.8	0.6	1.24
HTR TC IN HTR 24,15.9 IN	1288.2	0.4	1.27
HTR TC IN HTR 33,15.9 IN	1267.8	0.2	1.15

Test 11, run 125 (continued)

INSTRUMENT	20-SEC AVG	STD DEV	NORMALIZED TEMP
HTR TC IN HTR 34,15.9 IN	1263.5	0.9	1.12
HTR TC IN HTR 36,15.9 IN	1251.9	0.4	1.05
HTR TC IN HTR 04,16.1 IN	1321.3	0.4	1.48
HTR TC IN HTR 05,16.1 IN	1319.4	0.4	1.47
HTR TC IN HTR 07,16.1 IN	1325.2	0.5	1.51
HTR TC IN HTR 21,16.1 IN	1272.0	0.4	1.17
HTR TC IN HTR 27,16.1 IN	1286.2	0.3	1.26
HTR TC IN HTR 04,16.4 IN	1325.7	0.4	1.51
HTR TC IN HTR 05,16.4 IN	1322.2	0.3	1.49
HTR TC IN HTR 07,16.4 IN	1325.5	0.7	1.51
HTR TC IN HTR 21,16.4 IN	1275.7	0.8	1.20
HTR TC IN HTR 27,16.4 IN	1290.7	0.4	1.29
HTR TC IN HTR 04,16.6 IN	1324.7	1.7	1.50
HTR TC IN HTR 05,16.6 IN	1323.1	0.5	1.49
HTR TC IN HTR 07,16.6 IN	1319.6	0.5	1.47
HTR TC IN HTR 21,16.6 IN	1275.3	0.3	1.19
HTR TC IN HTR 27,16.6 IN	1287.9	0.2	1.27
HTR TC IN HTR 04,16.9 IN	1321.9	0.4	1.48
HTR TC IN HTR 07,16.9 IN	1316.9	0.4	1.45
HTR TC IN HTR 21,16.9 IN	1273.6	0.4	1.18
HTR TC IN HTR 27,16.9 IN	1282.7	0.4	1.24
HTR TC IN HTR 11,18AB IN	1317.7	0.5	1.46
HTR TC IN HTR 12,18AB IN	1308.0	0.3	1.40
HTR TC IN HTR 14,18AB IN	1278.5	0.4	1.21
HTR TC IN HTR 30,18AB IN	1309.9	0.4	1.41
HTR TC IN HTR 11,18BC IN	1316.7	0.5	1.45
HTR TC IN HTR 12,18BC IN	1306.6	0.4	1.39
HTR TC IN HTR 14,18BC IN	1282.1	0.3	1.24
HTR TC IN HTR 17,18BC IN	1312.1	0.3	1.42
HTR TC IN HTR 30,18BC IN	1298.9	0.3	1.34
WIRE WRAP THERMOCOUPLES			
WW TC ON HTR 12,-1 IN(DEG F)	1088.6	0.3	0.02
WW TC ON HTR 16,-1 IN	1088.3	0.4	0.02
WW TC ON HTR 12,01 IN	1103.3	10.6	0.12
WW TC ON HTR 16,09 IN	1181.1	0.4	0.60
WW TC ON HTR 04,11 IN	1202.4	0.5	0.74
WW TC ON HTR 05,11 IN	1190.2	0.3	0.66
WW TC ON HTR 13,11 IN	1197.3	0.4	0.71
WW TC ON HTR 17,11 IN	1193.2	0.4	0.68
WW TC ON HTR 28,11 IN	1182.9	0.3	0.62
WW TC ON HTR 31,11 IN	1187.0	0.4	0.64
WW TC ON HTR 03,13 IN	1208.0	0.5	0.77
WW TC ON HTR 11,13 IN	1214.5	0.6	0.81
WW TC ON HTR 13,13 IN	1209.6	0.4	0.78
WW TC ON HTR 15,13 IN	1212.8	0.3	0.80
WW TC ON HTR 17,13 IN	1212.5	0.4	0.80
WW TC ON HTR 22,13 IN	1196.8	0.5	0.70
WW TC ON HTR 01,15 IN	1234.7	0.4	0.94
WW TC ON HTR 03,15 IN	1227.7	0.3	0.90

Test 11, run 125 (continued)

INSTRUMENT	20-SEC AVG	STD DEV	NORMALIZED TEMP
WW TC ON HTR 33,21 IN	1254.3	0.4	1.06
WW TC ON HTR 34,21 IN	1232.0	0.3	0.92
WW TC ON HTR 04,23 IN	1289.5	0.5	1.28
WW TC ON HTR 09,23 IN	1254.5	0.3	1.06
WW TC ON HTR 14,23 IN	1259.8	0.5	1.10
WW TC ON HTR 24,23 IN	1217.6	0.3	0.83
WW TC ON HTR 28,23 IN	1237.4	0.4	0.96
WW TC ON HTR 31,23 IN	1218.1	0.4	0.84
WW TC ON ROD 01,25 IN	1286.6	0.4	1.26
WW TC ON ROD 02,25 IN	1252.2	0.4	1.05
WW TC ON ROD 05,25 IN	1265.7	0.4	1.13
WW TC ON ROD 08,25 IN	1216.8	0.3	0.83
WW TC ON ROD 14,25 IN	1235.2	0.3	0.94
WW TC ON ROD 04,27 IN	1260.5	0.4	1.10
WW TC ON HTR 08,15 IN	1222.3	0.4	0.86
WW TC ON HTR 10,15 IN	1223.0	0.4	0.87
WW TC ON HTR 15,15 IN	1228.3	0.4	0.90
WW TC ON HTR 19,15 IN	1226.7	0.5	0.89
WW TC ON HTR 25,15 IN	1185.3	0.2	0.63
WW TC ON HTR 36,15 IN	1169.5	0.3	0.53
WW TC ON HTR 01,17 IN	1261.0	0.4	1.10
WW TC AJ HTR 02,17 IN	1239.8	0.6	0.97
WW TC OP HTR 02,17 IN	1246.5	0.4	1.01
WW TC ON HTR 08,17 IN	1233.0	0.4	0.93
WW TC ON HTR 10,17 IN	1232.1	0.6	0.92
WW TC ON HTR 11,17 IN	1227.9	0.5	0.90
WW TC ON HTR 18,17 IN	1240.1	0.3	0.97
WW TC ON HTR 19,17 IN	1240.7	1.0	0.98
WW TC ON HTR 21,17 IN	1217.0	0.4	0.83
WW TC ON HTR 22,17 IN	1239.7	0.4	0.97
WW TC ON HTR 33,17 IN	1188.9	0.4	0.65
WW TC ON HTR 37,17 IN	1211.5	0.4	0.79
WW TC ON HTR 06,19 IN	1287.9	0.4	1.27
WW TC AJ HTR 07,19 IN	1259.7	0.6	1.10
WW TC OP HTR 07,19 IN	1268.0	0.6	1.15
WW TC ON HTR 09,19 IN	1256.9	0.5	1.08
WW TC ON HTR 14,19 IN	1238.8	0.4	0.96
WW TC ON HTR 18,19 IN	1255.3	0.2	1.07
WW TC ON HTR 27,19 IN	1197.1	0.3	0.70
WW TC ON HTR 30,19 IN	1204.8	0.4	0.75
WW TC ON HTR 34,19 IN	1237.3	0.4	0.96
WW TC ON HTR 36,19 IN	1231.5	0.4	0.92
WW TC ON HTR 37,19 IN	1208.1	0.4	0.77
WW TC ON HTR 05,21 IN	1296.0	0.5	1.32
WW TC ON HTR 06,21 IN	1298.2	0.4	1.34
WW TC ON HTR 21,21 IN	1230.0	0.4	0.91
WW TC ON HTR 24,21 IN	1215.1	0.3	0.82
WW TC ON HTR 25,21 IN	1202.8	0.5	0.74
WW TC ON HTR 27,21 IN	1228.1	0.4	0.90
WW TC ON HTR 30,21 IN	1247.9	0.4	1.02
WW TC ON ROD 07,27 IN	1273.9	0.4	1.18
WW TC ON ROD 12,27 IN	1228.7	0.3	0.90

Test 11, run 125 (continued)

INSTRUMENT	20-SEC AVG	STD DEV	NORMALIZED TEMP
WW TC ON ROD 16,27 IN	1213.0	0.4	0.80
WW TC ON ROD 18,27 IN	1228.6	0.2	0.90
WW TC ON ROD 03,29 IN	1276.3	0.3	1.20
WW TC ON ROD 06,29 IN	1265.2	0.3	1.13
WW TC ON ROD 10,29 IN	1234.3	0.4	0.94
WW TC ON ROD 01,37 IN	1273.3	0.4	1.18
WW TC ON ROD 02,37 IN	1238.7	0.5	0.96
WW TC ON ROD 08,37 IN	1230.4	0.3	0.91
WW TC ON ROD 14,37 IN	1250.4	0.5	1.04
WW TC ON ROD 04,51 IN	1255.3	0.2	1.07
WW TC ON ROD 07,51 IN	1256.3	0.6	1.07
WW TC ON ROD 12,51 IN	1235.8	0.4	0.95
WW TC ON ROD 16,51 IN	1238.9	0.4	0.97
WW TC ON ROD 18,51 IN	1233.1	0.4	0.93
WW TC ON ROD 03,63 IN	1258.3	0.4	1.09
WW TC ON ROD 06,63 IN	1248.3	0.4	1.02
WW TC ON ROD 10,63 IN	1246.8	0.3	1.01
DUCT THERMOCOUPLES			
DUCT WALL TC,CH 38,19 IN(DEG F)	1182.2	0.3	0.61
DUCT WALL TC,CH 53,19 IN	1184.5	0.2	0.62
DUCT WALL TC,CH 28,21 IN	1203.1	0.4	0.74
DUCT WALL TC,CH 43,21 IN	1206.6	0.4	0.76
DUCT WALL TC,CH 44,21 IN	1202.0	0.2	0.73
TEST SECTION HOUSING THERMOCOUPLES			
TS SHELL-BOT(DEG F)	1089.8	2.7	
TS GUARD HTR-BOT	989.8	1.9	
TS HTR-BOT	894.8	0.8	
TS SHELL-LOW CTR	1180.1	0.4	
TS GUARD HTR-LOW CTR	1129.9	0.3	
TS HTR-LOW CTR	994.5	0.7	
TS SHELL-UP CTR	1231.5	0.5	
TS GUARD HTR-UP CTR	1137.0	0.4	
TS HTR-UP CTR	1043.0	0.2	
TS SHELL-TOP	1241.1	0.3	
TS GUARD HTR-TOP	1167.1	0.3	
TS HTR-TOP	1069.2	0.4	
REFERENCE BOX THERMOCOUPLES			
150 DEG REF BOX 1(DEG F)	150.5	0.3	
150 DEG REF BOX 2	151.3	0.2	
150 DEG REF BOX 3	154.0	0.4	
150 DEG REF BOX 4	152.4	0.4	
150 DEG REF BOX 5	151.2	0.2	
MISCELLANEOUS			
SOD PUMP SPEED(RPM)	2752.9	30.5	
EXPANSION TANK LEVEL(% FULL)	72.8	0.2	

TEST SERIES 10(BUNDLE 3C); TEST 11 RUN 126 03/08/78 12 21 0

CONDITIONS:

TEST SECTION FLOW: 4.60 L/S (72.7 GPM)

TEST SECTION POWER

19 CENTRAL HEATERS: 281.1 KW (27.7 KW/M/ROD) (8.5 KW/FT/ROD)

12 EDGE HEATERS: 176.7 KW (27.6 KW/M/ROD) (8.4 KW/FT/ROD)

TOTAL(31 HEATERS): 457.7 KW

TEST SECTION INLET TEMPERATURE: 598 DEG C (1109 DEG F)

TEST SECTION OUTLET TEMPERATURE: 691 DEG C (1276 DEG F)

HEAT BALANCE:

HEAT INPUT FROM 31 FUEL PIN SIMULATORS: 457.7 KW

HEAT ABSORBED BY SODIUM=

FLOW X SP.HEAT X (TS OUT TEMP - TS IN TEMP) 436.4 KW

% OF INPUT HEAT ACCOUNTED FOR: 95.3 %

INSTRUMENT	20-SEC AVG	STD DEV
HEATER POWER-CENTRAL RODS(KW)		
HTR POWER IN ROD 1	14.8	0.0
HTR POWER IN RODS 8,9,10	44.5	0.0
HTR POWER IN RODS 14,15,16	44.7	0.0
HTR POWER IN RODS 2,3,11,19	59.1	0.0
HTR POWER IN RODS 5,6,13,17	58.9	0.0
HTR POWER IN RODS 4,7,12,18	59.1	0.0
HEATER POWER-EDGE RODS(KW)		
HTR POWER IN RODS 30,31	28.8	0.0
HTR POWER IN RODS 24,25,27,28	58.4	0.0
HTR POWER IN RODS 33,34	29.7	0.0
HTR POWER IN RODS 21,22,36,37	59.9	0.0
FLOWS		
TEST SECTION(TS) FLOW IN(GPM)	72.7	0.1
TS FLOW OUT(GPM)	74.0	0.2
TS BYPASS FLOW(GPM)	0.1	0.1
LOOP FLOW TOTAL(GPM)	72.4	0.4
RADIATOR AIR FLOW(CFM)	16.5	0.8
PRESSURES		
TS IN PRESS(PSIG)	87.3	0.1
TS OUT PRESS(PSIG)	8.2	0.1
PUMP OUT PRESS(PSIG)	84.4	0.1
TS LINE PRESS IN(PSIG)	88.0	0.1
EXP TANK ARGON PRESS(PSIG)	4.8	0.1
TS BYP LINE PRESS IN(PSIG)	89.1	0.1
TS BYP LINE PRESS OUT(PSIG)	9.0	0.1

Test 11, run 126 (continued)

INSTRUMENT	20-SEC AVG	STD DEV	NORMALIZED TEMP
LOOP THERMOCOUPLES			
TEST SECT INLET WELL(DEG F)	1109.4	0.4	
TEST SECT OUTLET WELL(DEG F)	1276.8	0.5	
PUMP IN PIPE WALL TC	1102.9	4.8	
PUMP OUT PIPE WALL TC	1101.8	0.3	
RAD IN PIPE WALL TC	1183.7	8.6	
RAD OUT PIPE WALL TC	1104.7	1.5	
HEATER INTERNAL THERMOCOUPLES			
HTR TC IN HTR 08,12AB IN(DEG F)	1288.7	0.5	1.07
HTR TC IN HTR 13,12AB IN	1277.2	0.4	1.00
HTR TC IN HTR 18,12AB IN	1292.8	0.4	1.10
HTR TC IN HTR 22,12AB IN	1282.5	0.5	1.03
HTR TC IN HTR 08,12BC IN	1281.1	0.3	1.03
HTR TC IN HTR 13,12BC IN	1279.6	1.0	1.02
HTR TC IN HTR 18,12BC IN	1294.1	0.5	1.10
HTR TC IN HTR 22,12BC IN	1279.1	0.4	1.01
HTR TC IN HTR 09,15AB IN	1322.2	0.3	1.27
HTR TC IN HTR 10,15AB IN	1311.3	0.4	1.21
HTR TC IN HTR 16,15BC IN	1306.6	0.5	1.18
HTR TC IN HTR 25,15BC IN	1297.1	0.2	1.12
HTR TC IN HTR 02,15.1 IN	1340.3	0.7	1.38
HTR TC IN HTR 03,15.1 IN	1347.8	0.8	1.42
HTR TC IN HTR 06,15.1 IN	1342.8	0.5	1.39
HTR TC IN HTR 15,15.1 IN	1335.4	0.4	1.35
HTR TC IN HTR 24,15.1 IN	1308.9	0.1	1.19
HTR TC IN HTR 33,15.1 IN	1311.4	0.2	1.21
HTR TC IN HTR 36,15.1 IN	1306.6	0.4	1.18
HTR TC IN HTR 02,15.4 IN	1355.1	0.5	1.47
HTR TC IN HTR 03,15.4 IN	1360.9	0.7	1.50
HTR TC IN HTR 06,15.4 IN	1346.8	0.7	1.42
HTR TC IN HTR 15,15.4 IN	1320.9	0.5	1.26
HTR TC IN HTR 24,15.4 IN	1329.4	0.4	1.31
HTR TC IN HTR 33,15.4 IN	1314.0	0.3	1.22
HTR TC IN HTR 34,15.4 IN	1302.7	0.5	1.15
HTR TC IN HTR 36,15.4 IN	1305.0	0.9	1.17
HTR TC IN HTR 02,15.6 IN	1353.3	0.5	1.46
HTR TC IN HTR 03,15.6 IN	1354.8	0.7	1.47
HTR TC IN HTR 06,15.6 IN	1366.6	0.4	1.54
HTR TC IN HTR 15,15.6 IN	1316.4	0.2	1.24
HTR TC IN HTR 24,15.6 IN	1326.2	0.4	1.30
HTR TC IN HTR 33,15.6 IN	1310.7	0.3	1.20
HTR TC IN HTR 34,15.6 IN	1307.0	0.5	1.18
HTR TC IN HTR 36,15.6 IN	1295.9	0.5	1.11
HTR TC IN HTR 03,15.9 IN	1325.3	0.6	1.29
HTR TC IN HTR 06,15.9 IN	1386.9	0.5	1.66
HTR TC IN HTR 15,15.9 IN	1309.7	0.5	1.20
HTR TC IN HTR 24,15.9 IN	1329.1	0.3	1.31
HTR TC IN HTR 33,15.9 IN	1306.4	0.2	1.18

Test 11, run 126 (continued)

INSTRUMENT	20-SEC AVG	STD DEV	NORMALIZED TEMP
HTR TC IN HTR 34,15.9 IN	1301.3	0.3	1.15
HTR TC IN HTR 36,15.9 IN	1293.1	0.3	1.10
HTR TC IN HTR 04,16.1 IN	1346.6	0.6	1.42
HTR TC IN HTR 05,16.1 IN	1346.5	0.4	1.42
HTR TC IN HTR 07,16.1 IN	1349.2	0.3	1.43
HTR TC IN HTR 21,16.1 IN	1312.5	0.4	1.21
HTR TC IN HTR 27,16.1 IN	1323.6	0.4	1.28
HTR TC IN HTR 04,16.4 IN	1349.7	0.5	1.44
HTR TC IN HTR 05,16.4 IN	1349.1	0.3	1.43
HTR TC IN HTR 07,16.4 IN	1349.0	0.4	1.43
HTR TC IN HTR 21,16.4 IN	1316.4	0.6	1.24
HTR TC IN HTR 27,16.4 IN	1328.8	0.4	1.31
HTR TC IN HTR 04,16.6 IN	1347.2	0.5	1.42
HTR TC IN HTR 05,16.6 IN	1349.3	0.3	1.43
HTR TC IN HTR 07,16.6 IN	1341.8	0.2	1.39
HTR TC IN HTR 21,16.6 IN	1317.6	0.5	1.24
HTR TC IN HTR 27,16.6 IN	1325.4	0.4	1.29
HTR TC IN HTR 04,16.9 IN	1343.9	0.5	1.40
HTR TC IN HTR 07,16.9 IN	1339.6	0.4	1.37
HTR TC IN HTR 21,16.9 IN	1316.0	0.4	1.23
HTR TC IN HTR 27,16.9 IN	1320.2	0.4	1.26
HTR TC IN HTR 11,18AB IN	1341.7	0.5	1.39
HTR TC IN HTR 12,18AB IN	1335.7	0.3	1.35
HTR TC IN HTR 14,18AB IN	1307.5	0.7	1.18
HTR TC IN HTR 30,18AB IN	1348.5	0.3	1.43
HTR TC IN HTR 11,18BC IN	1340.7	0.5	1.38
HTR TC IN HTR 12,18BC IN	1334.6	0.5	1.35
HTR TC IN HTR 14,18BC IN	1311.4	0.4	1.21
HTR TC IN HTR 17,18BC IN	1341.4	0.4	1.39
HTR TC IN HTR 30,18BC IN	1335.4	0.9	1.35
WIRE WRAP THERMOCOUPLES			
WW TC ON HTR 12,-1 IN(DEG F)	1114.2	0.4	0.03
WW TC ON HTR 16,-1 IN	1113.3	0.3	0.02
WW TC ON HTR 12,01 IN	1128.5	35.1	0.11
WW TC ON HTR 16,09 IN	1208.1	0.4	0.59
WW TC ON HTR 04,11 IN	1229.0	0.5	0.71
WW TC ON HTR 05,11 IN	1215.3	0.1	0.63
WW TC ON HTR 13,11 IN	1223.6	0.4	0.68
WW TC ON HTR 17,11 IN	1221.4	0.4	0.67
WW TC ON HTR 28,11 IN	1212.9	0.5	0.62
WW TC ON HTR 31,11 IN	1219.4	0.3	0.66
WW TC ON HTR 03,13 IN	1227.4	0.4	0.70
WW TC ON HTR 11,13 IN	1241.4	0.5	0.79
WW TC ON HTR 13,13 IN	1237.2	0.4	0.76
WW TC ON HTR 15,13 IN	1241.3	0.4	0.79
WW TC ON HTR 17,13 IN	1241.9	0.3	0.79
WW TC ON HTR 22,13 IN	1231.9	0.3	0.73
WW TC ON HTR 01,15 IN	1262.8	0.3	0.92
WW TC ON HTR 03,15 IN	1254.3	0.4	0.87

Test 11, run 126 (continued)

INSTRUMENT	20-SEC AVG	STD DEV	NORMALIZED TEMP
WW TC ON HTR 08,15 IN	1252.0	0.4	0.85
WW TC ON HTR 10,15 IN	1251.0	0.5	0.85
WW TC ON HTR 15,15 IN	1257.6	0.4	0.89
WW TC ON HTR 19,15 IN	1255.3	0.2	0.87
WW TC ON HTR 25,15 IN	1216.7	0.4	0.64
WW TC ON HTR 36,15 IN	1203.2	0.4	0.56
WW TC ON HTR 01,17 IN	1285.1	0.7	1.05
WW TC AJ HTR 02,17 IN	1268.4	0.4	0.95
WW TC OP HTR 02,17 IN	1274.4	0.4	0.99
WW TC ON HTR 08,17 IN	1261.6	0.4	0.91
WW TC ON HTR 10,17 IN	1262.4	0.5	0.91
WW TC ON HTR 11,17 IN	1255.4	0.3	0.87
WW TC ON HTR 18,17 IN	1268.0	0.4	0.95
WW TC ON HTR 19,17 IN	1268.8	0.5	0.95
WW TC ON HTR 21,17 IN	1255.9	0.7	0.88
WW TC ON HTR 22,17 IN	1272.6	0.5	0.98
WW TC ON HTR 33,17 IN	1224.2	0.4	0.69
WW TC ON HTR 37,17 IN	1247.8	0.2	0.83
WW TC ON HTR 06,19 IN	1316.7	0.4	1.24
WW TC AJ HTR 07,19 IN	1285.9	0.6	1.05
WW TC OP HTR 07,19 IN	1294.0	0.5	1.10
WW TC ON HTR 09,19 IN	1285.3	0.4	1.05
WW TC ON HTR 14,19 IN	1268.6	0.2	0.95
WW TC ON HTR 18,19 IN	1284.6	0.3	1.05
WW TC ON HTR 27,19 IN	1233.1	0.4	0.74
WW TC ON HTR 30,19 IN	1240.8	0.4	0.79
WW TC ON HTR 34,19 IN	1270.4	0.4	0.96
WW TC ON HTR 36,19 IN	1267.0	0.3	0.94
WW TC ON HTR 37,19 IN	1242.8	0.5	0.80
WW TC ON HTR 05,21 IN	1323.4	0.4	1.28
WW TC ON HTR 06,21 IN	1326.1	0.5	1.29
WW TC ON HTR 21,21 IN	1268.1	0.4	0.95
WW TC ON HTR 24,21 IN	1251.8	0.3	0.85
WW TC ON HTR 25,21 IN	1237.0	1.1	0.76
WW TC ON HTR 27,21 IN	1264.5	0.3	0.93
WW TC ON HTR 30,21 IN	1282.0	0.2	1.03
WW TC ON HTR 33,21 IN	1291.1	0.4	1.09
WW TC ON HTR 34,21 IN	1268.2	0.4	0.95
WW TC ON HTR 04,23 IN	1315.6	0.5	1.23
WW TC ON HTR 09,23 IN	1288.4	0.4	1.07
WW TC ON HTR 14,23 IN	1290.0	0.5	1.08
WW TC ON HTR 24,23 IN	1253.9	0.4	0.86
WW TC ON HTR 28,23 IN	1267.3	0.5	0.94
WW TC ON HTR 31,23 IN	1251.8	0.3	0.85
WW TC ON ROD 01,25 IN	1314.3	0.7	1.22
WW TC ON ROD 02,25 IN	1282.8	0.6	1.04
WW TC ON ROD 05,25 IN	1295.5	0.1	1.11
WW TC ON ROD 08,25 IN	1251.7	0.4	0.85
WW TC ON ROD 14,25 IN	1271.1	0.4	0.97
WW TC ON ROD 04,27 IN	1289.4	0.3	1.08
WW TC ON ROD 07,27 IN	1302.9	0.5	1.16

Test 11, run 126 (continued)

INSTRUMENT	20-SEC AVG	STD DEV	NORMALIZED TEMP
WW TC ON ROD 12,27 IN	1262.3	0.5	0.91
WW TC ON ROD 16,27 IN	1248.0	0.4	0.83
WW TC ON ROD 18,27 IN	1265.4	0.2	0.93
WW TC ON ROD 03,29 IN	1303.3	0.4	1.16
WW TC ON ROD 06,29 IN	1295.6	0.3	1.11
WW TC ON ROD 10,29 IN	1265.6	0.6	0.93
WW TC ON ROD 01,37 IN	1301.7	0.4	1.15
WW TC ON ROD 02,37 IN	1272.0	0.5	0.97
WW TC ON ROD 08,37 IN	1264.5	0.2	0.93
WW TC ON ROD 14,37 IN	1283.3	0.5	1.04
WW TC ON ROD 04,51 IN	1285.6	0.4	1.05
WW TC ON ROD 07,51 IN	1287.7	0.4	1.07
WW TC ON ROD 12,51 IN	1269.6	0.6	0.96
WW TC ON ROD 16,51 IN	1272.7	0.3	0.98
WW TC ON ROD 18,51 IN	1267.4	0.4	0.94
WW TC ON ROD 03,63 IN	1288.0	0.3	1.07
WW TC ON ROD 06,63 IN	1280.4	0.2	1.02
WW TC ON ROD 10,63 IN	1277.7	0.4	1.01
DUCT THERMOCOUPLES			
DUCT WALL TC,CH 38,19 IN(DEG F)	1214.8	0.4	0.63
DUCT WALL TC,CH 53,19 IN	1220.9	0.4	0.67
DUCT WALL TC,CH 28,21 IN	1238.3	0.4	0.77
DUCT WALL TC,CH 43,21 IN	1241.2	0.3	0.79
DUCT WALL TC,CH 44,21 IN	1239.1	0.5	0.77
TEST SECTION HOUSING THERMOCOUPLES			
TS SHELL-BOT(DEG F)	1115.4	2.4	
TS GUARD HTR-BOT	1011.9	1.0	
TS HTR-BOT	913.8	0.4	
TS SHELL-LOW CTR	1220.5	0.4	
TS GUARD HTR-LOW CTR	1162.2	0.3	
TS HTR-LOW CTR	1017.1	0.5	
TS SHELL-UP CTR	1267.1	0.5	
TS GUARD HTR-UP CTR	1164.6	0.2	
TS HTR-UP CTR	1065.2	0.3	
TS SHELL-TOP	1274.6	0.4	
TS GUARD HTR-TOP	1196.1	0.3	
TS HTR-TOP	1090.4	0.4	
REFERENCE BOX THERMOCOUPLES			
150 DEG REF BOX 1(DEG F)	150.4	0.4	
150 DEG REF BOX 2	151.3	0.2	
150 DEG REF BOX 3	154.3	0.4	
150 DEG REF BOX 4	152.4	0.4	
150 DEG REF BOX 5	150.9	0.4	
MISCELLANEOUS			
SOD PUMP SPEED(RPM)	2747.2	38.5	
EXPANSION TANK LEVEL(% FULL)	71.9	1.3	

TEST SERIES 10(BUNDLE 3C); TEST 11 RUN 131 03/03/78 12 49 25

CONDITIONS:

TEST SECTION FLOW: 2.77 L/S (43.8 GPM)

TEST SECTION POWER

19 CENTRAL HEATERS:	285.5 KW	(28.2 KW/M/ROD)	(8.6 KW/FT/ROD)
12 EDGE HEATERS:	0.0 KW	(0.0 KW/M/ROD)	(0.0 KW/FT/ROD)
TOTAL(31 HEATERS):	285.5 KW		

TEST SECTION INLET TEMPERATURE: 444 DEG C (831 DEG F)

TEST SECTION OUTLET TEMPERATURE: 538 DEG C (1001 DEG F)

HEAT BALANCE:

HEAT INPUT FROM 31 FUEL PIN SIMULATORS:	285.5 KW
HEAT ABSORBED BY SODIUM= FLOW X SP.HEAT X (TS OUT TEMP - TS IN TEMP)	280.4 KW
% OF INPUT HEAT ACCOUNTED FOR:	98.2 %

INSTRUMENT	20-SEC AVG	STD DEV
HEATER POWER-CENTRAL RODS(KW)		
HTR POWER IN ROD 1	14.9	0.0
HTR POWER IN RODS 8,9,10	45.4	0.0
HTR POWER IN RODS 14,15,16	45.3	0.0
HTR POWER IN RODS 2,3,11,19	59.8	0.0
HTR POWER IN RODS 5,6,13,17	60.2	0.0
HTR POWER IN RODS 4,7,12,18	59.9	0.0
HEATER POWER-EDGE RODS(KW)		
HTR POWER IN RODS 30,31	-0.0	0.0
HTR POWER IN RODS 24,25,27,28	-0.3	0.0
HTR POWER IN RODS 33,34	-0.0	0.0
HTR POWER IN RODS 21,22,36,37	0.0	0.0
FLOWS		
TEST SECTION(TS) FLOW IN(GPM)	43.8	0.1
TS FLOW OUT(GPM)	44.5	0.2
TS BYPASS FLOW(GPM)	1.0	0.1
LOOP FLOW TOTAL(GPM)	43.2	0.3
RADIATOR AIR FLOW(CFM)	11.1	0.6
PRESSURES		
TS IN PRESS(PSIG)	43.8	0.1
TS OUT PRESS(PSIG)	6.8	0.1
PUMP OUT PRESS(PSIG)	39.9	0.1
TS LINE PRESS IN(PSIG)	43.1	0.1
EXP TANK ARGON PRESS(PSIG)	3.4	0.1
TS BYP LINE PRESS IN(PSIG)	44.6	0.1
TS BYP LINE PRESS OUT(PSIG)	7.7	0.1

Test 11, run 131 (continued)

INSTRUMENT	20-SEC AVG	STD DEV	NORMALIZED TEMP
LOOP THERMOCOUPLES			
TEST SECT INLET WELL(DEG F)	831.2	0.5	
TEST SECT OUTLET WELL(DEG F)	1001.2	0.6	
PUMP IN PIPE WALL TC	832.5	3.0	
PUMP OUT PIPE WALL TC	825.5	0.6	
RAD IN PIPE WALL TC	937.5	5.4	
RAD OUT PIPE WALL TC	826.9	2.5	
HEATER INTERNAL THERMOCOUPLES			
HTR TC IN HTR 08,12AB IN(DEG F)	1062.0	0.5	1.36
HTR TC IN HTR 13,12AB IN	1000.8	0.6	1.00
HTR TC IN HTR 18,12AB IN	1010.9	0.4	1.06
HTR TC IN HTR 22,12AB IN	932.4	0.9	0.60
HTR TC IN HTR 08,12BC IN	1056.0	2.5	1.32
HTR TC IN HTR 13,12BC IN	997.2	0.6	0.98
HTR TC IN HTR 18,12BC IN	1013.2	0.4	1.07
HTR TC IN HTR 22,12BC IN	933.2	0.4	0.60
HTR TC IN HTR 09,15AB IN	1111.9	0.5	1.65
HTR TC IN HTR 10,15AB IN	1100.4	0.7	1.58
HTR TC IN HTR 16,15BC IN	1034.5	1.4	1.20
HTR TC IN HTR 25,15BC IN	894.4	0.4	0.37
HTR TC IN HTR 02,15.1 IN	1154.3	0.7	1.90
HTR TC IN HTR 03,15.1 IN	1177.1	1.3	2.03
HTR TC IN HTR 06,15.1 IN	1174.4	0.8	2.02
HTR TC IN HTR 15,15.1 IN	1138.8	0.9	1.81
HTR TC IN HTR 24,15.1 IN	966.4	1.1	0.80
HTR TC IN HTR 33,15.1 IN	944.5	0.4	0.67
HTR TC IN HTR 36,15.1 IN	913.5	1.0	0.48
HTR TC IN HTR 02,15.4 IN	1187.2	0.5	2.09
HTR TC IN HTR 03,15.4 IN	1198.1	0.9	2.16
HTR TC IN HTR 06,15.4 IN	1178.8	0.6	2.04
HTR TC IN HTR 15,15.4 IN	1130.8	0.7	1.76
HTR TC IN HTR 24,15.4 IN	964.7	0.4	0.79
HTR TC IN HTR 33,15.4 IN	948.6	0.5	0.69
HTR TC IN HTR 34,15.4 IN	975.6	0.5	0.85
HTR TC IN HTR 36,15.4 IN	910.1	0.7	0.46
HTR TC IN HTR 02,15.6 IN	1185.4	0.6	2.08
HTR TC IN HTR 03,15.6 IN	1190.3	0.7	2.11
HTR TC IN HTR 06,15.6 IN	1206.1	0.6	2.20
HTR TC IN HTR 15,15.6 IN	1127.8	0.6	1.74
HTR TC IN HTR 24,15.6 IN	947.5	0.8	0.68
HTR TC IN HTR 33,15.6 IN	956.4	0.5	0.74
HTR TC IN HTR 34,15.6 IN	958.4	0.6	0.75
HTR TC IN HTR 36,15.6 IN	904.6	0.4	0.43
HTR TC IN HTR 03,15.9 IN	1143.2	0.6	1.84
HTR TC IN HTR 06,15.9 IN	1227.6	1.2	2.33
HTR TC IN HTR 15,15.9 IN	1114.6	0.5	1.67
HTR TC IN HTR 24,15.9 IN	947.6	0.5	0.68
HTR TC IN HTR 33,15.9 IN	953.4	0.5	0.72

Test 11, run 131 (continued)

INSTRUMENT	20-SEC AVG	STD DEV	NORMALIZED TEMP
HTR TC IN HTR 34,15.9 IN	950.7	0.9	0.70
HTR TC IN HTR 36,15.9 IN	901.7	0.5	0.41
HTR TC IN HTR 04,16.1 IN	1180.4	0.8	2.05
HTR TC IN HTR 05,16.1 IN	1166.6	0.8	1.97
HTR TC IN HTR 07,16.1 IN	1179.1	1.2	2.05
HTR TC IN HTR 21,16.1 IN	908.5	0.6	0.45
HTR TC IN HTR 27,16.1 IN	957.9	0.4	0.75
HTR TC IN HTR 04,16.4 IN	1183.6	0.5	2.07
HTR TC IN HTR 05,16.4 IN	1170.8	2.5	2.00
HTR TC IN HTR 07,16.4 IN	1179.8	0.5	2.05
HTR TC IN HTR 21,16.4 IN	930.1	0.7	0.58
HTR TC IN HTR 27,16.4 IN	970.1	0.7	0.82
HTR TC IN HTR 04,16.6 IN	1180.0	0.8	2.05
HTR TC IN HTR 05,16.6 IN	1177.7	0.7	2.04
HTR TC IN HTR 07,16.6 IN	1169.6	0.4	1.99
HTR TC IN HTR 21,16.6 IN	945.5	0.4	0.67
HTR TC IN HTR 27,16.6 IN	971.8	0.8	0.83
HTR TC IN HTR 04,16.9 IN	1178.2	0.6	2.04
HTR TC IN HTR 07,16.9 IN	1168.7	1.3	1.99
HTR TC IN HTR 21,16.9 IN	927.8	0.4	0.57
HTR TC IN HTR 27,16.9 IN	959.7	0.9	0.76
HTR TC IN HTR 11,18AB IN	1163.9	0.6	1.96
HTR TC IN HTR 12,18AB IN	1128.5	0.5	1.75
HTR TC IN HTR 14,18AB IN	981.7	1.0	0.89
HTR TC IN HTR 30,18AB IN	1651.7	1.0	4.83
HTR TC IN HTR 11,18BC IN	1164.4	0.8	1.96
HTR TC IN HTR 12,18BC IN	1125.1	0.7	1.73
HTR TC IN HTR 14,18BC IN	1082.5	0.6	1.48
HTR TC IN HTR 17,18BC IN	1155.7	0.4	1.91
HTR TC IN HTR 30,18BC IN	1681.6	1.2	5.00
WIRE WRAP THERMOCOUPLES			
WW TC ON HTR 12,-1 IN(DEG F)	838.1	0.7	0.04
WW TC ON HTR 16,-1 IN	836.7	1.0	0.03
WW TC ON HTR 12,01 IN	857.4	0.4	0.15
WW TC ON HTR 16,09 IN	966.0	0.5	0.79
WW TC ON HTR 04,11 IN	1017.0	0.6	1.09
WW TC ON HTR 05,11 IN	1004.2	0.8	1.02
WW TC ON HTR 13,11 IN	999.3	0.3	0.99
WW TC ON HTR 17,11 IN	973.7	0.7	0.84
WW TC ON HTR 28,11 IN	934.7	0.5	0.61
WW TC ON HTR 31,11 IN	888.2	0.5	0.34
WW TC ON HTR 03,13 IN	1025.0	0.7	1.14
WW TC ON HTR 11,13 IN	1031.1	0.8	1.18
WW TC ON HTR 13,13 IN	1003.5	0.9	1.01
WW TC ON HTR 15,13 IN	995.2	2.1	0.96
WW TC ON HTR 17,13 IN	975.3	0.4	0.85
WW TC ON HTR 22,13 IN	882.0	0.9	0.30
WW TC ON HTR 01,15 IN	1078.2	1.0	1.45
WW TC ON HTR 03,15 IN	1072.5	1.0	1.42

Test 11, run 131 (continued)

INSTRUMENT	20-SEC AVG	STD DEV	NORMALIZED TEMP
WW TC ON HTR 08,15 IN	1020.0	0.4	1.11
WW TC ON HTR 10,15 IN	1037.8	1.1	1.22
WW TC ON HTR 15,15 IN	990.0	0.6	0.93
WW TC ON HTR 19,15 IN	1036.0	0.6	1.20
WW TC ON HTR 25,15 IN	902.7	0.7	0.42
WW TC ON HTR 36,15 IN	862.8	0.9	0.19
WW TC ON HTR 01,17 IN	1109.0	1.1	1.63
WW TC AJ HTR 02,17 IN	1079.4	0.9	1.46
WW TC OP HTR 02,17 IN	1093.5	0.7	1.54
WW TC ON HTR 08,17 IN	1036.9	0.5	1.21
WW TC ON HTR 10,17 IN	1025.0	0.4	1.14
WW TC ON HTR 11,17 IN	1000.5	1.3	1.00
WW TC ON HTR 18,17 IN	1052.7	0.4	1.30
WW TC ON HTR 19,17 IN	1050.6	0.8	1.29
WW TC ON HTR 21,17 IN	927.1	0.9	0.56
WW TC ON HTR 22,17 IN	987.9	0.7	0.92
WW TC ON HTR 33,17 IN	871.4	0.5	0.24
WW TC ON HTR 37,17 IN	901.5	0.4	0.41
WW TC ON HTR 06,19 IN	1151.1	0.8	1.88
WW TC AJ HTR 07,19 IN	1114.3	1.1	1.66
WW TC OP HTR 07,19 IN	1128.3	0.6	1.75
WW TC ON HTR 09,19 IN	1106.6	0.5	1.62
WW TC ON HTR 14,19 IN	974.9	1.0	0.85
WW TC ON HTR 18,19 IN	1072.2	1.0	1.42
WW TC ON HTR 27,19 IN	876.8	0.8	0.27
WW TC ON HTR 30,19 IN	895.6	0.4	0.38
WW TC ON HTR 34,19 IN	978.8	0.9	0.87
WW TC ON HTR 36,19 IN	946.7	0.4	0.68
WW TC ON HTR 37,19 IN	897.3	0.5	0.39
WW TC ON HTR 05,21 IN	1152.4	0.5	1.89
WW TC ON HTR 06,21 IN	1172.4	0.8	2.01
WW TC ON HTR 21,21 IN	924.5	0.7	0.55
WW TC ON HTR 24,21 IN	893.0	0.5	0.36
WW TC ON HTR 25,21 IN	896.9	1.0	0.39
WW TC ON HTR 27,21 IN	914.2	0.5	0.49
WW TC ON HTR 30,21 IN	975.1	1.4	0.85
WW TC ON HTR 33,21 IN	971.5	1.1	0.83
WW TC ON HTR 34,21 IN	927.6	1.1	0.57
WW TC ON HTR 04,23 IN	1162.0	0.5	1.95
WW TC ON HTR 09,23 IN	1020.9	1.0	1.12
WW TC ON HTR 14,23 IN	1037.0	0.9	1.21
WW TC ON HTR 24,23 IN	907.5	0.4	0.45
WW TC ON HTR 28,23 IN	949.6	0.5	0.70
WW TC ON HTR 31,23 IN	927.5	0.5	0.57
WW TC ON ROD 01,25 IN	1153.5	0.5	1.90
WW TC ON ROD 02,25 IN	1054.9	0.4	1.32
WW TC ON ROD 05,25 IN	1069.5	0.2	1.40
WW TC ON ROD 08,25 IN	935.8	0.3	0.62
WW TC ON ROD 14,25 IN	940.3	0.5	0.64
WW TC ON ROD 04,27 IN	1043.5	0.7	1.25
WW TC ON ROD 07,27 IN	1112.7	0.5	1.66

Test 11, run 131 (continued)

INSTRUMENT	20-SEC AVG	STD DEV	NORMALIZED TEMP
WW TC ON ROD 12,27 IN	945.7	0.7	0.67
WW TC ON ROD 16,27 IN	923.0	0.6	0.54
WW TC ON ROD 18,27 IN	957.4	0.7	0.74
WW TC ON ROD 03,29 IN	1124.7	0.5	1.73
WW TC ON ROD 06,29 IN	1075.1	0.4	1.43
WW TC ON ROD 10,29 IN	982.4	1.9	0.89
WW TC ON ROD 01,37 IN	1099.0	0.6	1.58
WW TC ON ROD 02,37 IN	1005.8	0.7	1.03
WW TC ON ROD 08,37 IN	950.4	0.4	0.70
WW TC ON ROD 14,37 IN	1003.1	2.5	1.01
WW TC ON ROD 04,51 IN	1043.1	0.6	1.25
WW TC ON ROD 07,51 IN	1042.1	0.6	1.24
WW TC ON ROD 12,51 IN	972.2	0.3	0.83
WW TC ON ROD 16,51 IN	987.0	0.6	0.92
WW TC ON ROD 18,51 IN	968.3	1.1	0.81
WW TC ON ROD 03,63 IN	1053.7	0.4	1.31
WW TC ON ROD 06,63 IN	1014.4	0.5	1.08
WW TC ON ROD 10,63 IN	1014.3	0.9	1.08
DUCT THERMOCOUPLES			
DUCT WALL TC,CH 38,19 IN(DEG F)	893.3	0.4	0.37
DUCT WALL TC,CH 53,19 IN	880.6	0.2	0.29
DUCT WALL TC,CH 28,21 IN	917.0	0.3	0.50
DUCT WALL TC,CH 43,21 IN	900.5	0.4	0.41
DUCT WALL TC,CH 44,21 IN	907.9	1.4	0.45
TEST SECTION HOUSING THERMOCOUPLES			
TS SHELL-BOT(DEG F)	838.7	2.7	
TS GUARD HTR-BOT	817.9	0.8	
TS HTR-BOT	774.4	0.3	
TS SHELL-LOW CTR	907.2	1.8	
TS GUARD HTR-LOW CTR	889.1	1.0	
TS HTR-LOW CTR	782.5	0.6	
TS SHELL-UP CTR	965.7	0.7	
TS GUARD HTR-UP CTR	921.8	0.7	
TS HTR-UP CTR	863.0	0.5	
TS SHELL-TOP	994.5	0.3	
TS GUARD HTR-TOP	967.5	2.0	
TS HTR-TOP	874.1	0.3	
REFERENCE BOX THERMOCOUPLES			
150 DEG REF BOX 1(DEG F)	150.5	0.4	
150 DEG REF BOX 2	151.4	0.7	
150 DEG REF BOX 3	154.6	0.2	
150 DEG REF BOX 4	152.4	0.4	
150 DEG REF BOX 5	151.4	1.7	
MISCELLANEOUS			
SOD PUMP SPEED(RPM)	1787.3	20.8	
EXPANSION TANK LEVEL(% FULL)	70.8	0.1	

TEST SERIES 10(BUNDLE 3C); TEST 11 RUN 136 03/08/78 13 34 16

CONDITIONS:

TEST SECTION FLOW: 2.84 L/S (44.8 GPM)

TEST SECTION POWER

19 CENTRAL HEATERS:	284.2 KW	(28.0 KW/M/ROD)	(8.5 KW/FT/ROD)
12 EDGE HEATERS:	159.0 KW	(24.8 KW/M/ROD)	(7.6 KW/FT/ROD)
TOTAL(31 HEATERS):	443.2 KW		

TEST SECTION INLET TEMPERATURE: 554 DEG C (1030 DEG F)

TEST SECTION OUTLET TEMPERATURE: 698 DEG C (1289 DEG F)

HEAT BALANCE:

HEAT INPUT FROM 31 FUEL PIN SIMULATORS: 443.2 KW

HEAT ABSORBED BY SODIUM=
FLOW X SP.HEAT X (TS OUT TEMP - TS IN TEMP) 420.6 KW

% OF INPUT HEAT ACCOUNTED FOR: 94.9 %

INSTRUMENT	20-SEC AVG	STD DEV
HEATER POWER-CENTRAL RODS(KW)		
HTR POWER IN ROD 1	15.0	0.0
HTR POWER IN RODS 8,9,10	45.0	0.0
HTR POWER IN RODS 14,15,16	45.1	0.0
HTR POWER IN RODS 2,3,11,19	59.7	0.0
HTR POWER IN RODS 5,6,13,17	59.7	0.0
HTR POWER IN RODS 4,7,12,18	59.7	0.0
HEATER POWER-EDGE RODS(KW)		
HTR POWER IN RODS 30,31	26.5	0.0
HTR POWER IN RODS 24,25,27,28	52.9	0.0
HTR POWER IN RODS 33,34	26.4	0.0
HTR POWER IN RODS 21,22,36,37	53.2	0.0
FLOWS		
TEST SECTION(TS) FLOW IN(GPM)	44.8	0.1
TS FLOW OUT(GPM)	45.9	0.2
TS BYPASS FLOW(GPM)	0.5	0.2
LOOP FLOW TOTAL(GPM)	44.1	0.3
RADIATOR AIR FLOW(CFM)	16.6	0.8
PRESSURES		
TS IN PRESS(PSIG)	40.5	0.1
TS OUT PRESS(PSIG)	6.7	0.1
PUMP OUT PRESS(PSIG)	36.2	0.1
TS LINE PRESS IN(PSIG)	39.8	0.1
EXP TANK ARGON PRESS(PSIG)	3.3	0.1
TS BYP LINE PRESS IN(PSIG)	41.0	0.1
TS BYP LINE PRESS OUT(PSIG)	7.7	0.1

Test 11, run 136 (continued)

INSTRUMENT	20-SEC AVG	STD DEV	NORMALIZED TEMP
LOOP THERMOCOUPLES			
TEST SECT INLET WELL(DEG F)	1030.6	0.8	
TEST SECT OUTLET WELL(DEG F)	1289.2	0.5	
PUMP IN PIPE WALL TC	1024.8	2.2	
PUMP OUT PIPE WALL TC	1024.3	0.4	
RAD IN PIPE WALL TC	1191.2	10.9	
RAD OUT PIPE WALL TC	1027.7	3.0	
HEATER INTERNAL THERMOCOUPLES			
HTR TC IN HTR 08,12AB IN(DEG F)	1273.3	0.5	0.94
HTR TC IN HTR 13,12AB IN	1257.6	0.6	0.88
HTR TC IN HTR 18,12AB IN	1268.7	0.3	0.92
HTR TC IN HTR 22,12AB IN	1254.3	0.4	0.86
HTR TC IN HTR 08,12BC IN	1266.2	0.5	0.91
HTR TC IN HTR 13,12BC IN	1259.9	0.6	0.89
HTR TC IN HTR 18,12BC IN	1270.1	0.5	0.93
HTR TC IN HTR 22,12BC IN	1250.8	0.4	0.85
HTR TC IN HTR 09,15AB IN	1330.6	0.7	1.16
HTR TC IN HTR 10,15AB IN	1315.8	0.5	1.10
HTR TC IN HTR 16,15BC IN	1297.8	0.5	1.03
HTR TC IN HTR 25,15BC IN	1268.7	0.1	0.92
HTR TC IN HTR 02,15.1 IN	1367.0	0.7	1.30
HTR TC IN HTR 03,15.1 IN	1369.2	0.7	1.31
HTR TC IN HTR 06,15.1 IN	1381.1	0.5	1.36
HTR TC IN HTR 15,15.1 IN	1347.2	0.5	1.22
HTR TC IN HTR 24,15.1 IN	1298.1	0.4	1.03
HTR TC IN HTR 33,15.1 IN	1294.0	0.4	1.02
HTR TC IN HTR 36,15.1 IN	1281.3	0.3	0.97
HTR TC IN HTR 02,15.4 IN	1394.5	0.6	1.41
HTR TC IN HTR 03,15.4 IN	1389.0	1.1	1.39
HTR TC IN HTR 06,15.4 IN	1387.1	0.6	1.38
HTR TC IN HTR 15,15.4 IN	1330.1	0.4	1.16
HTR TC IN HTR 24,15.4 IN	1315.6	0.4	1.10
HTR TC IN HTR 33,15.4 IN	1297.2	0.3	1.03
HTR TC IN HTR 34,15.4 IN	1292.1	1.4	1.01
HTR TC IN HTR 36,15.4 IN	1278.9	0.5	0.96
HTR TC IN HTR 02,15.6 IN	1392.2	0.6	1.40
HTR TC IN HTR 03,15.6 IN	1383.1	0.9	1.36
HTR TC IN HTR 06,15.6 IN	1410.1	0.5	1.47
HTR TC IN HTR 15,15.6 IN	1324.2	0.4	1.14
HTR TC IN HTR 24,15.6 IN	1308.9	0.2	1.08
HTR TC IN HTR 33,15.6 IN	1296.5	0.5	1.03
HTR TC IN HTR 34,15.6 IN	1289.0	0.9	1.00
HTR TC IN HTR 36,15.6 IN	1268.4	0.4	0.92
HTR TC IN HTR 03,15.9 IN	1340.3	0.7	1.20
HTR TC IN HTR 06,15.9 IN	1412.1	0.4	1.48
HTR TC IN HTR 15,15.9 IN	1318.9	0.6	1.12
HTR TC IN HTR 24,15.9 IN	1310.8	0.4	1.08
HTR TC IN HTR 33,15.9 IN	1292.0	0.4	1.01

Test 11, run 136 (continued)

INSTRUMENT	20-SEC AVG	STD DEV	NORMALIZED TEMP
HTR TC IN HTR 34,15.9 IN	1282.9	0.7	0.98
HTR TC IN HTR 36,15.9 IN	1264.6	0.4	0.90
HTR TC IN HTR 04,16.1 IN	1379.5	0.4	1.35
HTR TC IN HTR 05,16.1 IN	1377.7	0.6	1.34
HTR TC IN HTR 07,16.1 IN	1380.5	0.4	1.35
HTR TC IN HTR 21,16.1 IN	1294.9	0.5	1.02
HTR TC IN HTR 27,16.1 IN	1310.3	0.4	1.08
HTR TC IN HTR 04,16.4 IN	1382.5	0.5	1.36
HTR TC IN HTR 05,16.4 IN	1380.7	0.4	1.35
HTR TC IN HTR 07,16.4 IN	1380.8	0.5	1.35
HTR TC IN HTR 21,16.4 IN	1299.6	0.5	1.04
HTR TC IN HTR 27,16.4 IN	1316.4	0.3	1.11
HTR TC IN HTR 04,16.6 IN	1376.3	0.4	1.34
HTR TC IN HTR 05,16.6 IN	1382.4	0.4	1.36
HTR TC IN HTR 07,16.6 IN	1363.8	0.7	1.29
HTR TC IN HTR 21,16.6 IN	1301.2	0.4	1.05
HTR TC IN HTR 27,16.6 IN	1309.4	0.5	1.08
HTR TC IN HTR 04,16.9 IN	1371.2	0.4	1.32
HTR TC IN HTR 07,16.9 IN	1362.1	0.6	1.28
HTR TC IN HTR 21,16.9 IN	1299.3	0.5	1.04
HTR TC IN HTR 27,16.9 IN	1303.6	0.6	1.06
HTR TC IN HTR 11,18AB IN	1368.3	0.6	1.31
HTR TC IN HTR 12,18AB IN	1355.1	0.4	1.25
HTR TC IN HTR 14,18AB IN	1300.3	0.4	1.04
HTR TC IN HTR 30,18AB IN	1342.9	0.5	1.21
HTR TC IN HTR 11,18BC IN	1367.3	0.6	1.30
HTR TC IN HTR 12,18BC IN	1353.6	0.4	1.25
HTR TC IN HTR 14,18BC IN	1304.9	0.6	1.06
HTR TC IN HTR 17,18BC IN	1364.5	0.3	1.29
HTR TC IN HTR 30,18BC IN	1335.6	0.4	1.18
WIRE WRAP THERMOCOUPLES			
WW TC ON HTR 12,-1 IN(DEG F)	1036.4	0.4	0.02
WW TC ON HTR 16,-1 IN	1036.1	0.5	0.02
WW TC ON HTR 12,01 IN	1057.3	0.6	0.10
WW TC ON HTR 16,09 IN	1178.1	0.6	0.57
WW TC ON HTR 04,11 IN	1216.7	0.7	0.72
WW TC ON HTR 05,11 IN	1201.9	0.2	0.66
WW TC ON HTR 13,11 IN	1210.3	0.4	0.69
WW TC ON HTR 17,11 IN	1200.4	0.4	0.66
WW TC ON HTR 28,11 IN	1189.3	0.6	0.61
WW TC ON HTR 31,11 IN	1183.3	0.5	0.59
WW TC ON HTR 03,13 IN	1226.0	0.6	0.76
WW TC ON HTR 11,13 IN	1235.6	0.6	0.79
WW TC ON HTR 13,13 IN	1232.0	0.4	0.78
WW TC ON HTR 15,13 IN	1233.9	0.5	0.79
WW TC ON HTR 17,13 IN	1227.9	0.4	0.76
WW TC ON HTR 22,13 IN	1204.9	0.5	0.67
WW TC ON HTR 01,15 IN	1273.4	0.6	0.94
WW TC ON HTR 03,15 IN	1271.6	0.5	0.93

Test 11, run 136 (continued)

INSTRUMENT	20-SEC AVG	STD DEV	NORMALIZED TEMP
WW TC ON HTR 08,15 IN	1253.0	0.5	0.86
WW TC ON HTR 10,15 IN	1255.1	0.4	0.87
WW TC ON HTR 15,15 IN	1257.0	0.4	0.88
WW TC ON HTR 19,15 IN	1259.2	0.5	0.88
WW TC ON HTR 25,15 IN	1187.5	0.4	0.61
WW TC ON HTR 36,15 IN	1162.4	0.4	0.51
WW TC ON HTR 01,17 IN	1320.4	0.5	1.12
WW TC AJ HTR 02,17 IN	1286.4	0.7	0.99
WW TC OP HTR 02,17 IN	1298.2	0.5	1.03
WW TC ON HTR 08,17 IN	1272.3	0.5	0.93
WW TC ON HTR 10,17 IN	1273.4	0.7	0.94
WW TC ON HTR 11,17 IN	1260.7	0.5	0.89
WW TC ON HTR 18,17 IN	1280.5	0.5	0.97
WW TC ON HTR 19,17 IN	1282.3	0.5	0.97
WW TC ON HTR 21,17 IN	1245.9	0.5	0.83
WW TC ON HTR 22,17 IN	1272.6	0.4	0.94
WW TC ON HTR 33,17 IN	1201.8	0.4	0.66
WW TC ON HTR 37,17 IN	1228.8	0.4	0.77
WW TC ON HTR 06,19 IN	1357.9	0.6	1.27
WW TC AJ HTR 07,19 IN	1322.6	0.9	1.13
WW TC OP HTR 07,19 IN	1337.3	0.7	1.19
WW TC ON HTR 09,19 IN	1309.1	0.5	1.08
WW TC ON HTR 14,19 IN	1278.1	0.5	0.96
WW TC ON HTR 18,19 IN	1304.1	0.6	1.06
WW TC ON HTR 27,19 IN	1213.6	0.4	0.71
WW TC ON HTR 30,19 IN	1228.7	0.4	0.77
WW TC ON HTR 34,19 IN	1276.2	0.3	0.95
WW TC ON HTR 36,19 IN	1268.1	0.4	0.92
WW TC ON HTR 37,19 IN	1227.6	0.3	0.76
WW TC ON HTR 05,21 IN	1376.0	0.4	1.34
WW TC ON HTR 06,21 IN	1378.8	0.4	1.35
WW TC ON HTR 21,21 IN	1262.5	0.5	0.90
WW TC ON HTR 24,21 IN	1244.3	0.4	0.83
WW TC ON HTR 25,21 IN	1229.4	0.6	0.77
WW TC ON HTR 27,21 IN	1256.5	0.6	0.87
WW TC ON HTR 30,21 IN	1296.0	0.6	1.03
WW TC ON HTR 33,21 IN	1299.8	0.4	1.04
WW TC ON HTR 34,21 IN	1264.8	0.4	0.91
WW TC ON HTR 04,23 IN	1366.6	0.5	1.30
WW TC ON HTR 09,23 IN	1308.9	0.3	1.08
WW TC ON HTR 14,23 IN	1314.6	0.6	1.10
WW TC ON HTR 24,23 IN	1249.2	0.4	0.85
WW TC ON HTR 28,23 IN	1271.4	0.5	0.93
WW TC ON HTR 31,23 IN	1245.8	0.4	0.83
WW TC ON ROD 01,25 IN	1364.1	0.5	1.29
WW TC ON ROD 02,25 IN	1307.2	0.5	1.07
WW TC ON ROD 05,25 IN	1327.5	0.5	1.15
WW TC ON ROD 08,25 IN	1248.9	0.4	0.84
WW TC ON ROD 14,25 IN	1272.0	0.5	0.93
WW TC ON ROD 04,27 IN	1315.9	0.5	1.10
WW TC ON ROD 07,27 IN	1342.5	0.5	1.21

Test 11, run 136 (continued)

INSTRUMENT	20-SEC AVG	STD DEV	NORMALIZED TEMP
WW TC ON ROD 12,27 IN	1264.7	0.4	0.91
WW TC ON ROD 16,27 IN	1242.6	0.5	0.82
WW TC ON ROD 18,27 IN	1265.9	0.4	0.91
WW TC ON ROD 03,29 IN	1344.8	0.4	1.21
WW TC ON ROD 06,29 IN	1326.4	0.4	1.14
WW TC ON ROD 10,29 IN	1271.7	0.4	0.93
WW TC ON ROD 01,37 IN	1340.3	0.5	1.20
WW TC ON ROD 02,37 IN	1293.4	0.5	1.02
WW TC ON ROD 08,37 IN	1266.6	0.4	0.91
WW TC ON ROD 14,37 IN	1297.7	0.4	1.03
WW TC ON ROD 04,51 IN	1308.1	0.3	1.07
WW TC ON ROD 07,51 IN	1312.2	0.4	1.09
WW TC ON ROD 12,51 IN	1277.1	0.4	0.95
WW TC ON ROD 16,51 IN	1281.5	0.4	0.97
WW TC ON ROD 18,51 IN	1272.9	0.3	0.94
WW TC ON ROD 03,63 IN	1317.5	0.5	1.11
WW TC ON ROD 06,63 IN	1297.9	0.4	1.03
WW TC ON ROD 10,63 IN	1297.8	0.4	1.03
DUCT THERMOCOUPLES			
DUCT WALL TC,CH 38,19 IN(DEG F)	1196.1	0.2	0.64
DUCT WALL TC,CH 53,19 IN	1198.8	0.4	0.65
DUCT WALL TC,CH 28,21 IN	1229.7	0.5	0.77
DUCT WALL TC,CH 43,21 IN	1233.0	0.4	0.78
DUCT WALL TC,CH 44,21 IN	1231.2	0.3	0.78
TEST SECTION HOUSING THERMOCOUPLES			
TS SHELL-BOT(DEG F)	1037.4	4.8	
TS GUARD HTR-BOT	960.3	1.4	
TS HTR-BOT	878.4	0.5	
TS SHELL-LOW CTR	1208.0	0.4	
TS GUARD HTR-LOW CTR	1155.7	0.4	
TS HTR-LOW CTR	1011.8	0.6	
TS SHELL-UP CTR	1268.8	0.3	
TS GUARD HTR-UP CTR	1166.9	0.4	
TS HTR-UP CTR	1067.6	0.4	
TS SHELL-TOP	1284.5	0.3	
TS GUARD HTR-TOP	1204.5	0.7	
TS HTR-TOP	1094.4	0.4	
REFERENCE BOX THERMOCOUPLES			
150 DEG REF BOX 1(DEG F)	150.2	0.4	
150 DEG REF BOX 2	151.5	0.5	
150 DEG REF BOX 3	153.9	0.3	
150 DEG REF BOX 4	152.6	0.4	
150 DEG REF BOX 5	150.9	0.4	
MISCELLANEOUS			
SOD PUMP SPEED(RPM)	1708.4	13.2	
EXPANSION TANK LEVEL(% FULL)	70.3	0.2	

TEST SERIES 10(BUNDLE 3C); TEST 11 RUN 141 03/09/78 11 14 48

CONDITIONS:

TEST SECTION FLOW: 0.89 L/S (14.1 GPM)

TEST SECTION POWER

19 CENTRAL HEATERS:	143.8 KW	(14.2 KW/M/ROD)	(4.3 KW/FT/ROD)
12 EDGE HEATERS:	0.0 KW	(0.0 KW/M/ROD)	(0.0 KW/FT/ROD)
TOTAL(31 HEATERS):	143.8 KW		

TEST SECTION INLET TEMPERATURE: 444 DEG C (832 DEG F)

TEST SECTION OUTLET TEMPERATURE: 585 DEG C (1085 DEG F)

HEAT BALANCE:

HEAT INPUT FROM 31 FUEL PIN SIMULATORS: 143.8 KW

HEAT ABSORBED BY SODIUM=
FLOW X SP.HEAT X (TS OUT TEMP - TS IN TEMP) 134.0 KW

% OF INPUT HEAT ACCOUNTED FOR: 93.2 %

INSTRUMENT	20-SEC AVG	STD DEV
HEATER POWER-CENTRAL RODS(KW)		
HTR POWER IN ROD 1	7.6	0.0
HTR POWER IN RODS 8,9,10	22.6	0.0
HTR POWER IN RODS 14,15,16	22.7	0.0
HTR POWER IN RODS 2,3,11,19	30.3	0.0
HTR POWER IN RODS 5,6,13,17	30.2	0.0
HTR POWER IN RODS 4,7,12,18	30.4	0.0
HEATER POWER-EDGE RODS(KW)		
HTR POWER IN RODS 30,31	-0.1	0.0
HTR POWER IN RODS 24,25,27,28	-0.4	0.0
HTR POWER IN RODS 33,34	-0.0	0.0
HTR POWER IN RODS 21,22,36,37	-0.0	0.0
FLOWS		
TEST SECTION(TS) FLOW IN(GPM)	14.1	0.1
TS FLOW OUT(GPM)	14.7	0.1
TS BYPASS FLOW(GPM)	-0.4	0.1
LOOP FLOW TOTAL(GPM)	13.9	0.2
RADIATOR AIR FLOW(CFM)	1.3	0.0
PRESSURES		
TS IN PRESS(PSIG)	14.6	0.1
TS OUT PRESS(PSIG)	6.2	0.0
PUMP OUT PRESS(PSIG)	9.3	0.1
TS LINE PRESS IN(PSIG)	13.5	0.1
EXP TANK ARGON PRESS(PSIG)	2.8	0.1
TS BYP LINE PRESS IN(PSIG)	14.6	0.1
TS BYP LINE PRESS OUT(PSIG)	7.1	0.1

Test 11, run 141 (continued)

INSTRUMENT	20-SEC AVG	STD DEV	NORMALIZED TEMP
LOOP THERMOCOUPLES			
TEST SECT INLET WELL(DEG F)	832.9	0.8	
TEST SECT OUTLET WELL(DEG F)	1085.4	0.4	
PUMP IN PIPE WALL TC	825.4	3.1	
PUMP OUT PIPE WALL TC	822.7	0.3	
RAD IN PIPE WALL TC	1041.9	5.6	
RAD OUT PIPE WALL TC	825.6	3.6	
HEATER INTERNAL THERMOCOUPLES			
HTR TC IN HTR 08,12AB IN(DEG F)	1087.4	0.4	1.01
HTR TC IN HTR 13,12AB IN	1006.3	0.4	0.69
HTR TC IN HTR 18,12AB IN	999.1	0.4	0.66
HTR TC IN HTR 22,12AB IN	984.0	0.4	0.60
HTR TC IN HTR 08,12BC IN	1086.7	0.4	1.01
HTR TC IN HTR 13,12BC IN	1006.7	0.4	0.69
HTR TC IN HTR 18,12BC IN	1001.1	0.3	0.67
HTR TC IN HTR 22,12BC IN	984.9	0.4	0.60
HTR TC IN HTR 09,15AB IN	1175.9	0.5	1.36
HTR TC IN HTR 10,15AB IN	1150.7	0.5	1.26
HTR TC IN HTR 16,15BC IN	1049.8	0.4	0.86
HTR TC IN HTR 25,15BC IN	958.7	0.4	0.50
HTR TC IN HTR 02,15.1 IN	1242.9	0.7	1.62
HTR TC IN HTR 03,15.1 IN	1272.0	0.5	1.74
HTR TC IN HTR 06,15.1 IN	1289.8	0.5	1.81
HTR TC IN HTR 15,15.1 IN	1193.7	0.4	1.43
HTR TC IN HTR 24,15.1 IN	1016.2	0.4	0.73
HTR TC IN HTR 33,15.1 IN	1011.0	0.3	0.71
HTR TC IN HTR 36,15.1 IN	976.8	0.4	0.57
HTR TC IN HTR 02,15.4 IN	1281.7	0.4	1.78
HTR TC IN HTR 03,15.4 IN	1290.4	0.5	1.81
HTR TC IN HTR 06,15.4 IN	1293.1	0.5	1.82
HTR TC IN HTR 15,15.4 IN	1203.1	0.5	1.47
HTR TC IN HTR 24,15.4 IN	1015.8	0.3	0.72
HTR TC IN HTR 33,15.4 IN	1016.0	0.3	0.73
HTR TC IN HTR 34,15.4 IN	1048.7	1.5	0.85
HTR TC IN HTR 36,15.4 IN	975.1	0.4	0.56
HTR TC IN HTR 02,15.6 IN	1280.0	0.4	1.77
HTR TC IN HTR 03,15.6 IN	1281.7	0.4	1.78
HTR TC IN HTR 06,15.6 IN	1316.3	0.5	1.91
HTR TC IN HTR 15,15.6 IN	1200.0	0.4	1.45
HTR TC IN HTR 24,15.6 IN	995.1	0.4	0.64
HTR TC IN HTR 33,15.6 IN	1026.8	0.4	0.77
HTR TC IN HTR 34,15.6 IN	1023.5	0.8	0.75
HTR TC IN HTR 36,15.6 IN	968.0	0.2	0.54
HTR TC IN HTR 03,15.9 IN	1220.1	0.4	1.53
HTR TC IN HTR 06,15.9 IN	1321.2	0.5	1.93
HTR TC IN HTR 15,15.9 IN	1183.6	0.5	1.39
HTR TC IN HTR 24,15.9 IN	994.4	0.2	0.64
HTR TC IN HTR 33,15.9 IN	1023.3	0.2	0.75

Test 11, run 141 (continued)

INSTRUMENT	20-SEC AVG	STD DEV	NORMALIZED TEMP
HTR TC IN HTR 34,15.9 IN	1016.0	0.6	0.73
HTR TC IN HTR 36,15.9 IN	964.3	0.5	0.52
HTR TC IN HTR 04,16.1 IN	1286.1	0.5	1.79
HTR TC IN HTR 05,16.1 IN	1268.8	0.3	1.73
HTR TC IN HTR 07,16.1 IN	1277.0	0.4	1.76
HTR TC IN HTR 21,16.1 IN	968.9	0.3	0.54
HTR TC IN HTR 27,16.1 IN	1004.9	0.4	0.68
HTR TC IN HTR 04,16.4 IN	1288.5	0.5	1.80
HTR TC IN HTR 05,16.4 IN	1273.1	0.4	1.74
HTR TC IN HTR 07,16.4 IN	1278.2	0.4	1.76
HTR TC IN HTR 21,16.4 IN	972.4	0.4	0.55
HTR TC IN HTR 27,16.4 IN	1009.2	0.2	0.70
HTR TC IN HTR 04,16.6 IN	1277.6	0.5	1.76
HTR TC IN HTR 05,16.6 IN	1276.2	0.4	1.76
HTR TC IN HTR 07,16.6 IN	1266.0	0.4	1.71
HTR TC IN HTR 21,16.6 IN	975.2	0.4	0.56
HTR TC IN HTR 27,16.6 IN	1002.6	0.3	0.67
HTR TC IN HTR 04,16.9 IN	1272.2	0.6	1.74
HTR TC IN HTR 07,16.9 IN	1264.1	0.4	1.71
HTR TC IN HTR 21,16.9 IN	975.2	0.4	0.56
HTR TC IN HTR 27,16.9 IN	999.3	0.3	0.66
HTR TC IN HTR 11,18AB IN	1250.1	0.4	1.65
HTR TC IN HTR 12,18AB IN	1188.6	0.3	1.41
HTR TC IN HTR 14,18AB IN	1029.9	0.2	0.78
HTR TC IN HTR 30,18AB IN	1023.3	0.2	0.75
HTR TC IN HTR 11,18BC IN	1249.8	0.4	1.65
HTR TC IN HTR 12,18BC IN	1183.9	0.5	1.39
HTR TC IN HTR 14,18BC IN	1033.9	0.4	0.80
HTR TC IN HTR 17,18BC IN	1225.3	0.4	1.55
HTR TC IN HTR 30,18BC IN	1042.0	0.4	0.83
WIRE WRAP THERMOCOUPLES			
WW TC ON HTR 12,-1 IN(DEG F)	837.5	0.3	0.02
WW TC ON HTR 16,-1 IN	838.2	0.4	0.02
WW TC ON HTR 12,01 IN	863.5	17.7	0.12
WW TC ON HTR 16,09 IN	1003.5	0.3	0.68
WW TC ON HTR 04,11 IN	1097.8	0.5	1.05
WW TC ON HTR 05,11 IN	1088.9	0.4	1.01
WW TC ON HTR 13,11 IN	1066.8	0.4	0.93
WW TC ON HTR 17,11 IN	1015.5	0.4	0.72
WW TC ON HTR 28,11 IN	972.4	0.4	0.55
WW TC ON HTR 31,11 IN	917.8	0.3	0.34
WW TC ON HTR 03,13 IN	1131.5	0.4	1.18
WW TC ON HTR 11,13 IN	1108.6	0.4	1.09
WW TC ON HTR 13,13 IN	1073.0	0.4	0.95
WW TC ON HTR 15,13 IN	1036.1	0.4	0.80
WW TC ON HTR 17,13 IN	1007.5	0.3	0.69
WW TC ON HTR 22,13 IN	927.8	0.4	0.38
WW TC ON HTR 01,15 IN	1192.3	0.5	1.42
WW TC ON HTR 03,15 IN	1188.1	0.4	1.41

Test 11, run 141 (continued)

INSTRUMENT	20-SEC AVG	STD DEV	NORMALIZED TEMP
WW TC ON HTR 08,15 IN	1079.8	0.5	0.98
WW TC ON HTR 10,15 IN	1123.1	0.7	1.15
WW TC ON HTR 15,15 IN	1033.1	0.3	0.79
WW TC ON HTR 19,15 IN	1127.3	0.4	1.17
WW TC ON HTR 25,15 IN	953.2	0.3	0.48
WW TC ON HTR 36,15 IN	912.2	0.4	0.31
WW TC ON HTR 01,17 IN	1251.3	0.6	1.66
WW TC AJ HTR 02,17 IN	1201.1	0.6	1.46
WW TC OP HTR 02,17 IN	1228.2	0.4	1.57
WW TC ON HTR 08,17 IN	1103.5	0.5	1.07
WW TC ON HTR 10,17 IN	1108.6	0.5	1.09
WW TC ON HTR 11,17 IN	1065.2	0.4	0.92
WW TC ON HTR 18,17 IN	1147.0	0.4	1.24
WW TC ON HTR 19,17 IN	1137.8	0.5	1.21
WW TC ON HTR 21,17 IN	979.6	0.4	0.58
WW TC ON HTR 22,17 IN	1050.7	0.4	0.86
WW TC ON HTR 33,17 IN	941.6	0.5	0.43
WW TC ON HTR 37,17 IN	961.9	0.4	0.51
WW TC ON HTR 06,19 IN	1286.0	0.5	1.79
WW TC AJ HTR 07,19 IN	1245.2	0.7	1.63
WW TC OP HTR 07,19 IN	1273.2	0.5	1.74
WW TC ON HTR 09,19 IN	1187.7	0.5	1.40
WW TC ON HTR 14,19 IN	1056.0	0.4	0.88
WW TC ON HTR 18,19 IN	1156.6	0.4	1.28
WW TC ON HTR 27,19 IN	930.0	0.3	0.38
WW TC ON HTR 30,19 IN	970.4	0.4	0.54
WW TC ON HTR 34,19 IN	1057.6	0.5	0.89
WW TC ON HTR 36,19 IN	1006.5	0.4	0.69
WW TC ON HTR 37,19 IN	965.6	0.3	0.53
WW TC ON HTR 05,21 IN	1303.2	0.4	1.86
WW TC ON HTR 06,21 IN	1318.7	0.5	1.92
WW TC ON HTR 21,21 IN	988.2	0.4	0.61
WW TC ON HTR 24,21 IN	958.1	0.3	0.50
WW TC ON HTR 25,21 IN	969.7	0.3	0.54
WW TC ON HTR 27,21 IN	995.7	0.4	0.64
WW TC ON HTR 30,21 IN	1052.6	0.5	0.87
WW TC ON HTR 33,21 IN	1036.4	0.4	0.81
WW TC ON HTR 34,21 IN	992.6	0.4	0.63
WW TC ON HTR 04,23 IN	1310.5	0.5	1.89
WW TC ON HTR 09,23 IN	1094.3	0.4	1.04
WW TC ON HTR 14,23 IN	1099.1	0.4	1.05
WW TC ON HTR 24,23 IN	1001.6	0.4	0.67
WW TC ON HTR 28,23 IN	1019.6	0.4	0.74
WW TC ON HTR 31,23 IN	995.2	0.2	0.64
WW TC ON ROD 01,25 IN	1274.8	0.4	1.75
WW TC ON ROD 02,25 IN	1159.4	0.5	1.29
WW TC ON ROD 05,25 IN	1159.7	0.4	1.29
WW TC ON ROD 08,25 IN	1015.6	0.5	0.72
WW TC ON ROD 14,25 IN	1015.1	0.3	0.72
WW TC ON ROD 04,27 IN	1137.0	0.7	1.20
WW TC ON ROD 07,27 IN	1234.7	0.5	1.59

Test 11, run 141 (continued)

INSTRUMENT	20-SEC AVG	STD DEV	NORMALIZED TEMP
WW TC ON ROD 12,27 IN	1015.9	1.2	0.72
WW TC ON ROD 16,27 IN	1002.7	0.2	0.67
WW TC ON ROD 18,27 IN	1046.6	0.4	0.85
WW TC ON ROD 03,29 IN	1228.6	0.3	1.57
WW TC ON ROD 06,29 IN	1181.5	0.5	1.38
WW TC ON ROD 10,29 IN	1050.6	0.5	0.86
WW TC ON ROD 01,37 IN	1208.2	0.4	1.49
WW TC ON ROD 02,37 IN	1121.5	0.3	1.14
WW TC ON ROD 08,37 IN	1037.4	0.2	0.81
WW TC ON ROD 14,37 IN	1078.5	0.3	0.97
WW TC ON ROD 04,51 IN	1122.3	0.1	1.15
WW TC ON ROD 07,51 IN	1135.9	0.4	1.20
WW TC ON ROD 12,51 IN	1058.6	0.3	0.89
WW TC ON ROD 16,51 IN	1068.4	0.4	0.93
WW TC ON ROD 18,51 IN	1063.8	0.3	0.91
WW TC ON ROD 03,63 IN	1138.6	0.4	1.21
WW TC ON ROD 06,63 IN	1106.4	0.4	1.08
WW TC ON ROD 10,63 IN	1105.0	0.2	1.08
DUCT THERMOCOUPLES			
DUCT WALL TC,CH 38,19 IN(DEG F)	954.9	0.2	0.48
DUCT WALL TC,CH 53,19 IN	936.9	0.4	0.41
DUCT WALL TC,CH 28,21 IN	985.7	0.4	0.61
DUCT WALL TC,CH 43,21 IN	962.9	0.4	0.51
DUCT WALL TC,CH 44,21 IN	965.7	0.3	0.53
TEST SECTION HOUSING THERMOCOUPLES			
TS SHELL-BOT(DEG F)	840.1	4.7	
TS GUARD HTR-BOT	818.3	0.5	
TS HTR-BOT	773.8	0.3	
TS SHELL-LOW CTR	972.1	0.3	
TS GUARD HTR-LOW CTR	972.1	0.3	
TS HTR-LOW CTR	885.4	0.6	
TS SHELL-UP CTR	1056.3	0.2	
TS GUARD HTR-UP CTR	1014.7	0.4	
TS HTR-UP CTR	953.1	0.3	
TS SHELL-TOP	1083.9	0.5	
TS GUARD HTR-TOP	1040.2	0.4	
TS HTR-TOP	984.4	0.3	
REFERENCE BOX THERMOCOUPLES			
150 DEG REF BOX 1(DEG F)	150.6	0.4	
150 DEG REF BOX 2	152.2	0.3	
150 DEG REF BOX 3	154.3	0.4	
150 DEG REF BOX 4	152.8	0.4	
150 DEG REF BOX 5	151.3	0.2	
MISCELLANEOUS			
SOD PUMP SPEED(RPM)	613.6	24.4	
EXPANSION TANK LEVEL(% FULL)	75.2	0.1	

TEST SERIES 10(BUNDLE 3C); TEST 11 RUN 142 03/09/78 12 21 18

CONDITIONS:

TEST SECTION FLOW: 0.91 L/S (14.4 GPM)

TEST SECTION POWER

19 CENTRAL HEATERS: 142.1 KW (14.0 KW/M/ROD) (4.3 KW/FT/ROD)

12 EDGE HEATERS: 81.2 KW (12.7 KW/M/ROD) (3.9 KW/FT/ROD)

TOTAL(31 HEATERS): 223.3 KW

TEST SECTION INLET TEMPERATURE: 444 DEG C (831 DEG F)

TEST SECTION OUTLET TEMPERATURE: 660 DEG C (1219 DEG F)

HEAT BALANCE:

HEAT INPUT FROM 31 FUEL PIN SIMULATORS: 223.3 KW

HEAT ABSORBED BY SODIUM=

FLOW X SP.HEAT X (TS OUT TEMP - TS IN TEMP) 210.8 KW

% OF INPUT HEAT ACCOUNTED FOR: 94.4 %

INSTRUMENT	20-SEC AVG	STD DEV
HEATER POWER-CENTRAL RODS(KW)		
HTR POWER IN ROD 1	7.5	0.0
HTR POWER IN RODS 8,9,10	22.4	0.0
HTR POWER IN RODS 14,15,16	22.4	0.0
HTR POWER IN RODS 2,3,11,19	29.9	0.0
HTR POWER IN RODS 5,6,13,17	29.9	0.0
HTR POWER IN RODS 4,7,12,18	29.9	0.0
HEATER POWER-EDGE RODS(KW)		
HTR POWER IN RODS 30,31	13.6	0.0
HTR POWER IN RODS 24,25,27,28	27.0	0.0
HTR POWER IN RODS 33,34	13.5	0.0
HTR POWER IN RODS 21,22,36,37	27.1	0.0
FLOWS		
TEST SECTION(TS) FLOW IN(GPM)	14.4	0.1
TS FLOW OUT(GPM)	15.3	0.1
TS BYPASS FLOW(GPM)	-0.4	0.2
LOOP FLOW TOTAL(GPM)	14.2	0.2
RADIATOR AIR FLOW(CFM)	2.1	0.1
PRESSURES		
TS IN PRESS(PSIG)	14.5	0.1
TS OUT PRESS(PSIG)	6.2	0.0
PUMP OUT PRESS(PSIG)	9.2	0.0
TS LINE PRESS IN(PSIG)	13.4	0.1
EXP TANK ARGON PRESS(PSIG)	2.8	0.1
TS BYP LINE PRESS IN(PSIG)	14.5	0.1
TS BYP LINE PRESS OUT(PSIG)	7.1	0.1

Test 11, run 142 (continued)

INSTRUMENT	20-SEC AVG	STD DEV	NORMALIZED TEMP
LOOP THERMOCOUPLES			
TEST SECT INLET WELL(DEG F)	831.7	1.1	
TEST SECT OUTLET WELL(DEG F)	1219.9	0.4	
PUMP IN PIPE WALL TC	827.3	1.4	
PUMP OUT PIPE WALL TC	823.6	0.4	
RAD IN PIPE WALL TC	1152.6	8.0	
RAD OUT PIPE WALL TC	825.1	8.7	
HEATER INTERNAL THERMOCOUPLES			
HTR TC IN HTR 08,12AB IN(DEG F)	1116.8	0.4	0.73
HTR TC IN HTR 13,12AB IN	1096.9	0.5	0.68
HTR TC IN HTR 18,12AB IN	1090.5	0.4	0.67
HTR TC IN HTR 22,12AB IN	1100.8	0.2	0.69
HTR TC IN HTR 08,12BC IN	1114.8	0.3	0.73
HTR TC IN HTR 13,12BC IN	1097.6	0.4	0.69
HTR TC IN HTR 18,12BC IN	1091.3	0.4	0.67
HTR TC IN HTR 22,12BC IN	1098.9	0.4	0.69
HTR TC IN HTR 09,15AB IN	1203.1	0.5	0.96
HTR TC IN HTR 10,15AB IN	1187.8	0.3	0.92
HTR TC IN HTR 16,15BC IN	1148.8	0.2	0.82
HTR TC IN HTR 25,15BC IN	1134.9	0.3	0.78
HTR TC IN HTR 02,15.1 IN	1259.3	0.5	1.10
HTR TC IN HTR 03,15.1 IN	1285.8	0.6	1.17
HTR TC IN HTR 06,15.1 IN	1318.0	0.7	1.25
HTR TC IN HTR 15,15.1 IN	1224.3	0.4	1.01
HTR TC IN HTR 24,15.1 IN	1169.7	0.3	0.87
HTR TC IN HTR 33,15.1 IN	1160.8	0.4	0.85
HTR TC IN HTR 36,15.1 IN	1141.5	0.3	0.80
HTR TC IN HTR 02,15.4 IN	1293.4	0.5	1.19
HTR TC IN HTR 03,15.4 IN	1282.0	0.3	1.16
HTR TC IN HTR 06,15.4 IN	1326.1	0.8	1.27
HTR TC IN HTR 15,15.4 IN	1219.2	0.8	1.00
HTR TC IN HTR 24,15.4 IN	1177.1	0.3	0.89
HTR TC IN HTR 33,15.4 IN	1163.6	0.4	0.85
HTR TC IN HTR 34,15.4 IN	1169.3	2.4	0.87
HTR TC IN HTR 36,15.4 IN	1139.6	0.4	0.79
HTR TC IN HTR 02,15.6 IN	1290.7	0.5	1.18
HTR TC IN HTR 03,15.6 IN	1271.0	0.4	1.13
HTR TC IN HTR 06,15.6 IN	1352.3	0.8	1.34
HTR TC IN HTR 15,15.6 IN	1214.9	0.4	0.99
HTR TC IN HTR 24,15.6 IN	1172.2	0.3	0.88
HTR TC IN HTR 33,15.6 IN	1165.2	0.4	0.86
HTR TC IN HTR 34,15.6 IN	1157.4	1.2	0.84
HTR TC IN HTR 36,15.6 IN	1130.5	0.3	0.77
HTR TC IN HTR 03,15.9 IN	1221.1	0.4	1.00
HTR TC IN HTR 06,15.9 IN	1345.8	0.6	1.32
HTR TC IN HTR 15,15.9 IN	1199.4	0.3	0.95
HTR TC IN HTR 24,15.9 IN	1171.4	0.3	0.87
HTR TC IN HTR 33,15.9 IN	1160.4	0.3	0.85

Test 11, run 142 (continued)

INSTRUMENT	20-SEC AVG	STD DEV	NORMALIZED TEMP
HTR TC IN HTR 34,15.9 IN	1151.1	0.8	0.82
HTR TC IN HTR 36,15.9 IN	1126.2	0.5	0.76
HTR TC IN HTR 04,16.1 IN	1291.2	0.4	1.18
HTR TC IN HTR 05,16.1 IN	1282.9	0.6	1.16
HTR TC IN HTR 07,16.1 IN	1283.7	0.4	1.16
HTR TC IN HTR 21,16.1 IN	1156.9	0.5	0.84
HTR TC IN HTR 27,16.1 IN	1168.7	0.3	0.87
HTR TC IN HTR 04,16.4 IN	1293.0	0.4	1.19
HTR TC IN HTR 05,16.4 IN	1286.4	0.5	1.17
HTR TC IN HTR 07,16.4 IN	1285.4	0.4	1.17
HTR TC IN HTR 21,16.4 IN	1161.1	0.3	0.85
HTR TC IN HTR 27,16.4 IN	1172.8	0.2	0.88
HTR TC IN HTR 04,16.6 IN	1278.8	0.4	1.15
HTR TC IN HTR 05,16.6 IN	1289.7	0.5	1.18
HTR TC IN HTR 07,16.6 IN	1273.0	0.4	1.14
HTR TC IN HTR 21,16.6 IN	1166.4	0.4	0.86
HTR TC IN HTR 27,16.6 IN	1166.4	0.4	0.86
HTR TC IN HTR 04,16.9 IN	1272.7	0.4	1.14
HTR TC IN HTR 07,16.9 IN	1273.7	0.4	1.14
HTR TC IN HTR 21,16.9 IN	1165.6	0.5	0.86
HTR TC IN HTR 27,16.9 IN	1161.8	0.4	0.85
HTR TC IN HTR 11,18AB IN	1271.8	0.4	1.13
HTR TC IN HTR 12,18AB IN	1238.0	0.4	1.05
HTR TC IN HTR 14,18AB IN	1160.7	0.6	0.85
HTR TC IN HTR 30,18AB IN	1207.5	0.4	0.97
HTR TC IN HTR 11,18BC IN	1272.2	0.4	1.13
HTR TC IN HTR 12,18BC IN	1236.1	0.4	1.04
HTR TC IN HTR 14,18BC IN	1162.8	0.6	0.85
HTR TC IN HTR 17,18BC IN	1261.3	0.3	1.11
HTR TC IN HTR 30,18BC IN	1210.9	0.4	0.98
WIRE WRAP THERMOCOUPLES			
WW TC ON HTR 12,-1 IN(DEG F)	837.3	0.4	0.01
WW TC ON HTR 16,-1 IN	837.5	0.3	0.01
WW TC ON HTR 12,01 IN	864.5	0.4	0.08
WW TC ON HTR 16,09 IN	1028.6	0.5	0.51
WW TC ON HTR 04,11 IN	1095.6	0.4	0.68
WW TC ON HTR 05,11 IN	1086.5	0.4	0.66
WW TC ON HTR 13,11 IN	1082.7	0.2	0.65
WW TC ON HTR 17,11 IN	1069.6	0.2	0.61
WW TC ON HTR 28,11 IN	1053.0	0.3	0.57
WW TC ON HTR 31,11 IN	1038.7	0.4	0.53
WW TC ON HTR 03,13 IN	1127.7	0.4	0.76
WW TC ON HTR 11,13 IN	1126.7	0.4	0.76
WW TC ON HTR 13,13 IN	1119.7	0.4	0.74
WW TC ON HTR 15,13 IN	1115.0	0.4	0.73
WW TC ON HTR 17,13 IN	1105.9	0.3	0.71
WW TC ON HTR 22,13 IN	1077.2	0.4	0.63
WW TC ON HTR 01,15 IN	1192.1	0.5	0.93
WW TC ON HTR 03,15 IN	1186.2	0.4	0.91

Test 11, run 142 (continued)

INSTRUMENT	20-SEC AVG	STD DEV	NORMALIZED TEMP
WW TC ON HTR 08,15 IN	1140.0	0.4	0.79
WW TC ON HTR 10,15 IN	1161.4	0.3	0.85
WW TC ON HTR 15,15 IN	1145.7	0.4	0.81
WW TC ON HTR 19,15 IN	1161.8	0.4	0.85
WW TC ON HTR 25,15 IN	1079.7	0.4	0.64
WW TC ON HTR 36,15 IN	1063.6	0.3	0.60
WW TC ON HTR 01,17 IN	1260.2	0.6	1.10
WW TC AJ HTR 02,17 IN	1222.7	0.4	1.01
WW TC OP HTR 02,17 IN	1242.5	0.6	1.06
WW TC ON HTR 08,17 IN	1177.4	0.4	0.89
WW TC ON HTR 10,17 IN	1188.7	0.3	0.92
WW TC ON HTR 11,17 IN	1169.5	0.4	0.87
WW TC ON HTR 18,17 IN	1196.1	0.3	0.94
WW TC ON HTR 19,17 IN	1187.9	0.3	0.92
WW TC ON HTR 21,17 IN	1147.3	0.3	0.81
WW TC ON HTR 22,17 IN	1169.5	0.3	0.87
WW TC ON HTR 33,17 IN	1105.4	0.5	0.71
WW TC ON HTR 37,17 IN	1122.0	0.4	0.75
WW TC ON HTR 06,19 IN	1303.4	0.5	1.22
WW TC AJ HTR 07,19 IN	1258.8	0.5	1.10
WW TC OP HTR 07,19 IN	1281.4	0.5	1.16
WW TC ON HTR 09,19 IN	1247.3	0.4	1.07
WW TC ON HTR 14,19 IN	1183.6	0.4	0.91
WW TC ON HTR 18,19 IN	1218.2	0.4	1.00
WW TC ON HTR 27,19 IN	1122.5	0.3	0.75
WW TC ON HTR 30,19 IN	1144.2	0.5	0.81
WW TC ON HTR 34,19 IN	1193.3	0.4	0.93
WW TC ON HTR 36,19 IN	1171.0	0.4	0.87
WW TC ON HTR 37,19 IN	1138.0	0.3	0.79
WW TC ON HTR 05,21 IN	1330.3	0.5	1.28
WW TC ON HTR 06,21 IN	1335.9	0.4	1.30
WW TC ON HTR 21,21 IN	1178.7	0.3	0.89
WW TC ON HTR 24,21 IN	1167.3	0.4	0.86
WW TC ON HTR 25,21 IN	1160.4	0.4	0.85
WW TC ON HTR 27,21 IN	1174.2	0.4	0.88
WW TC ON HTR 30,21 IN	1216.7	0.5	0.99
WW TC ON HTR 33,21 IN	1215.3	0.3	0.99
WW TC ON HTR 34,21 IN	1176.5	0.4	0.89
WW TC ON HTR 04,23 IN	1331.9	0.4	1.29
WW TC ON HTR 09,23 IN	1235.9	0.4	1.04
WW TC ON HTR 14,23 IN	1235.6	0.5	1.04
WW TC ON HTR 24,23 IN	1184.7	0.3	0.91
WW TC ON HTR 28,23 IN	1195.1	0.4	0.94
WW TC ON HTR 31,23 IN	1181.2	0.2	0.90
WW TC ON ROD 01,25 IN	1311.1	0.4	1.23
WW TC ON ROD 02,25 IN	1251.8	0.4	1.08
WW TC ON ROD 05,25 IN	1261.6	0.4	1.11
WW TC ON ROD 08,25 IN	1178.9	0.4	0.89
WW TC ON ROD 14,25 IN	1192.0	0.4	0.93
WW TC ON ROD 04,27 IN	1247.4	0.5	1.07
WW TC ON ROD 07,27 IN	1287.9	0.3	1.18

Test 11, run 142 (continued)

INSTRUMENT	20-SEC AVG	STD DEV	NORMALIZED TEMP
WW TC ON ROD 12,27 IN	1187.8	0.5	0.92
WW TC ON ROD 16,27 IN	1179.8	0.4	0.90
WW TC ON ROD 18,27 IN	1201.5	0.4	0.95
WW TC ON ROD C3,29 IN	1282.9	0.4	1.16
WW TC ON ROD 06,29 IN	1271.9	0.5	1.13
WW TC ON ROD 10,29 IN	1200.7	0.4	0.95
WW TC ON ROD C1,37 IN	1278.5	0.4	1.15
WW TC ON ROD C2,37 IN	1233.0	0.4	1.03
WW TC ON ROD C8,37 IN	1193.8	0.3	0.93
WW TC ON ROD 14,37 IN	1221.8	0.4	1.00
WW TC ON ROD C4,51 IN	1238.3	0.4	1.05
WW TC ON ROD C7,51 IN	1245.2	0.3	1.07
WW TC ON ROD 12,51 IN	1206.4	0.4	0.97
WW TC ON ROD 16,51 IN	1213.9	0.4	0.98
WW TC ON ROD 18,51 IN	1210.1	0.4	0.97
WW TC ON ROD C3,63 IN	1244.9	0.4	1.06
WW TC ON ROD C6,63 IN	1232.4	0.4	1.03
WW TC ON ROD 10,63 IN	1228.6	0.2	1.02
DUCT THERMOCOUPLES			
DUCT WALL TC,CH 38,19 IN(DEG F)	1112.1	0.4	0.72
DUCT WALL TC,CH 53,19 IN	1113.3	0.2	0.73
DUCT WALL TC,CH 28,21 IN	1153.9	0.2	0.83
DUCT WALL TC,CH 43,21 IN	1156.7	0.4	0.84
DUCT WALL TC,CH 44,21 IN	1153.8	0.2	0.83
TEST SECTION HOUSING THERMOCOUPLES			
TS SHELL-BOT(DEG F)	841.0	7.1	
TS GUARD HTR-BOT	829.8	0.8	
TS HTR-BOT	788.2	0.8	
TS SHELL-LOW CTR	1143.0	0.3	
TS GUARD HTR-LOW CTR	1103.7	0.4	
TS HTR-LOW CTR	969.9	0.9	
TS SHELL-UP CTR	1207.4	0.4	
TS GUARD HTR-UP CTR	1125.7	0.2	
TS HTR-UP CTR	1039.1	0.3	
TS SHELL-TOP	1220.3	0.4	
TS GUARD HTR-TOP	1156.2	0.3	
TS HTR-TOP	1065.8	0.4	
REFERENCE BOX THERMOCOUPLES			
150 DEG REF BOX 1(DEG F)	150.4	0.3	
150 DEG REF BOX 2	151.5	0.4	
150 DEG REF BOX 3	154.2	0.4	
150 DEG REF BOX 4	152.4	0.4	
150 DEG REF BOX 5	151.2	0.2	
MISCELLANEOUS			
SOD PUMP SPEED(RPM)	612.5	11.0	
EXPANSION TANK LEVEL(% FULL)	71.5	0.3	

TEST SERIES 10(BUNDLE 3C); TEST 11 RUN 143 03/09/78 13 2 44

CONDITIONS:

TEST SECTION FLOW: 0.95 L/S (15.1 GPM)

TEST SECTION POWER

19 CENTRAL HEATERS: 143.2 KW (14.1 KW/M/ROD) (4.3 KW/FT/ROD)

12 EDGE HEATERS: 89.9 KW (14.0 KW/M/ROD) (4.3 KW/FT/ROD)

TOTAL(31 HEATERS): 233.1 KW

TEST SECTION INLET TEMPERATURE: 445 DEG C (833 DEG F)

TEST SECTION OUTLET TEMPERATURE: 669 DEG C (1236 DEG F)

HEAT BALANCE:

HEAT INPUT FROM 31 FUEL PIN SIMULATORS: 233.1 KW

HEAT ABSORBED BY SODIUM=

FLOW X SP.HEAT X (TS OUT TEMP - TS IN TEMP) 228.6 KW

% OF INPUT HEAT ACCOUNTED FOR: 98.1 %

INSTRUMENT	20-SEC AVG	STD DEV
HEATER POWER-CENTRAL RODS(KW)		
HTR POWER IN ROD 1	7.5	0.0
HTR POWER IN RODS 8,9,10	22.7	0.0
HTR POWER IN RODS 14,15,16	22.6	0.0
HTR POWER IN RODS 2,3,11,19	30.0	0.0
HTR POWER IN RODS 5,6,13,17	30.2	0.0
HTR POWER IN RODS 4,7,12,18	30.2	0.0
HEATER POWER-EDGE RODS(KW)		
HTR POWER IN RODS 30,31	15.0	0.0
HTR POWER IN RODS 24,25,27,28	30.0	0.0
HTR POWER IN RODS 33,34	15.0	0.0
HTR POWER IN RODS 21,22,36,37	29.9	0.0
FLOWS		
TEST SECTION(TS) FLOW IN(GPM)	15.1	1.2
TS FLOW OUT(GPM)	15.2	0.1
TS BYPASS FLOW(GPM)	-0.1	0.1
LOOP FLOW TOTAL(GPM)	14.8	1.1
RADIATOR AIR FLOW(CFM)	2.3	0.2
PRESSURES		
TS IN PRESS(PSIG)	14.5	0.1
TS OUT PRESS(PSIG)	6.1	0.1
PUMP OUT PRESS(PSIG)	9.1	0.1
TS LINE PRESS IN(PSIG)	13.3	0.1
EXP TANK ARGON PRESS(PSIG)	2.7	0.1
TS BYP LINE PRESS IN(PSIG)	14.4	0.1
TS BYP LINE PRESS OUT(PSIG)	6.9	0.1

Test 11, run 143 (continued)

INSTRUMENT	20-SEC AVG	STD DEV	NORMALIZED TEMP
LOOP THERMOCOUPLES			
TEST SECT INLET WELL(DEG F)	833.3	0.8	
TEST SECT OUTLET WELL(DEG F)	1237.0	0.4	
PUMP IN PIPE WALL TC	828.1	1.0	
PUMP OUT PIPE WALL TC	824.6	0.5	
RAD IN PIPE WALL TC	1165.1	11.5	
RAD OUT PIPE WALL TC	826.5	8.0	
HEATER INTERNAL THERMOCOUPLES			
HTR TC IN HTR 08,12AB IN(DEG F)	1123.2	0.9	0.72
HTR TC IN HTR 13,12AB IN	1109.4	0.7	0.68
HTR TC IN HTR 18,12AB IN	1101.6	0.7	0.66
HTR TC IN HTR 22,12AB IN	1115.8	0.5	0.70
HTR TC IN HTR 08,12BC IN	1120.6	0.7	0.71
HTR TC IN HTR 13,12BC IN	1110.0	0.9	0.69
HTR TC IN HTR 18,12BC IN	1102.9	0.5	0.67
HTR TC IN HTR 22,12BC IN	1113.3	0.5	0.69
HTR TC IN HTR 09,15AB IN	1209.5	0.8	0.93
HTR TC IN HTR 10,15AB IN	1194.7	0.7	0.90
HTR TC IN HTR 16,15BC IN	1162.7	0.8	0.82
HTR TC IN HTR 25,15BC IN	1155.7	0.5	0.80
HTR TC IN HTR 02,15.1 IN	1262.4	0.9	1.06
HTR TC IN HTR 03,15.1 IN	1287.9	0.8	1.13
HTR TC IN HTR 06,15.1 IN	1317.0	1.0	1.20
HTR TC IN HTR 15,15.1 IN	1233.2	0.8	0.99
HTR TC IN HTR 24,15.1 IN	1188.0	0.5	0.88
HTR TC IN HTR 33,15.1 IN	1179.9	0.6	0.86
HTR TC IN HTR 36,15.1 IN	1160.7	0.6	0.81
HTR TC IN HTR 02,15.4 IN	1292.1	0.9	1.14
HTR TC IN HTR 03,15.4 IN	1282.3	1.0	1.11
HTR TC IN HTR 06,15.4 IN	1322.0	0.9	1.21
HTR TC IN HTR 15,15.4 IN	1226.9	0.8	0.97
HTR TC IN HTR 24,15.4 IN	1196.4	0.5	0.90
HTR TC IN HTR 33,15.4 IN	1182.2	0.6	0.86
HTR TC IN HTR 34,15.4 IN	1183.3	2.2	0.87
HTR TC IN HTR 36,15.4 IN	1158.9	0.7	0.81
HTR TC IN HTR 02,15.6 IN	1289.3	0.9	1.13
HTR TC IN HTR 03,15.6 IN	1273.6	0.9	1.09
HTR TC IN HTR 06,15.6 IN	1346.2	1.0	1.27
HTR TC IN HTR 15,15.6 IN	1222.6	0.8	0.96
HTR TC IN HTR 24,15.6 IN	1192.1	0.7	0.89
HTR TC IN HTR 33,15.6 IN	1183.1	0.6	0.87
HTR TC IN HTR 34,15.6 IN	1174.8	1.5	0.85
HTR TC IN HTR 36,15.6 IN	1149.4	0.8	0.78
HTR TC IN HTR 03,15.9 IN	1224.9	0.8	0.97
HTR TC IN HTR 06,15.9 IN	1343.5	0.9	1.26
HTR TC IN HTR 15,15.9 IN	1205.8	0.9	0.92
HTR TC IN HTR 24,15.9 IN	1191.9	0.6	0.89
HTR TC IN HTR 33,15.9 IN	1178.5	0.7	0.86

Test 11, run 143 (continued)

INSTRUMENT	20-SEC AVG	STD DEV	NORMALIZED TEMP
HTR TC IN HTR 34,15.9 IN	1167.3	0.8	0.83
HTR TC IN HTR 36,15.9 IN	1145.5	0.7	0.77
HTR TC IN HTR 04,16.1 IN	1301.4	0.8	1.16
HTR TC IN HTR 05,16.1 IN	1290.5	0.9	1.13
HTR TC IN HTR 07,16.1 IN	1287.4	0.8	1.12
HTR TC IN HTR 21,16.1 IN	1179.8	0.6	0.86
HTR TC IN HTR 27,16.1 IN	1189.9	0.9	0.88
HTR TC IN HTR 04,16.4 IN	1304.2	0.9	1.17
HTR TC IN HTR 05,16.4 IN	1294.2	0.8	1.14
HTR TC IN HTR 07,16.4 IN	1288.9	0.8	1.13
HTR TC IN HTR 21,16.4 IN	1183.5	1.0	0.87
HTR TC IN HTR 27,16.4 IN	1194.1	0.7	0.89
HTR TC IN HTR 04,16.6 IN	1288.1	0.8	1.13
HTR TC IN HTR 05,16.6 IN	1295.0	0.7	1.14
HTR TC IN HTR 07,16.6 IN	1276.6	0.7	1.10
HTR TC IN HTR 21,16.6 IN	1188.9	0.6	0.88
HTR TC IN HTR 27,16.6 IN	1188.2	0.6	0.88
HTR TC IN HTR 04,16.9 IN	1282.3	0.9	1.11
HTR TC IN HTR 07,16.9 IN	1275.5	0.7	1.10
HTR TC IN HTR 21,16.9 IN	1188.2	0.5	0.88
HTR TC IN HTR 27,16.9 IN	1183.3	0.8	0.87
HTR TC IN HTR 11,18AB IN	1277.4	1.0	1.10
HTR TC IN HTR 12,18AB IN	1248.3	0.9	1.03
HTR TC IN HTR 14,18AB IN	1179.0	0.6	0.86
HTR TC IN HTR 30,18AB IN	1230.6	0.7	0.98
HTR TC IN HTR 11,18BC IN	1277.1	0.8	1.10
HTR TC IN HTR 12,18BC IN	1246.5	0.9	1.02
HTR TC IN HTR 14,18BC IN	1181.3	0.7	0.86
HTR TC IN HTR 17,18BC IN	1268.8	0.8	1.08
HTR TC IN HTR 30,18BC IN	1232.2	0.7	0.99
WIRE WRAP THERMOCOUPLES			
WW TC ON HTR 12,-1 IN(DEG F)	838.8	0.4	0.01
WW TC ON HTR 16,-1 IN	839.4	0.4	0.02
WW TC ON HTR 12,01 IN	865.5	0.4	0.08
WW TC ON HTR 16,09 IN	1034.4	0.6	0.50
WW TC ON HTR 04,11 IN	1099.0	0.7	0.66
WW TC ON HTR 05,11 IN	1090.3	0.6	0.64
WW TC ON HTR 13,11 IN	1088.9	0.6	0.63
WW TC ON HTR 17,11 IN	1079.2	0.6	0.61
WW TC ON HTR 28,11 IN	1064.7	0.5	0.57
WW TC ON HTR 31,11 IN	1052.6	0.6	0.54
WW TC ON HTR 03,13 IN	1130.8	0.7	0.74
WW TC ON HTR 11,13 IN	1131.7	0.7	0.74
WW TC ON HTR 13,13 IN	1128.5	0.7	0.73
WW TC ON HTR 15,13 IN	1125.6	0.7	0.72
WW TC ON HTR 17,13 IN	1120.0	0.6	0.71
WW TC ON HTR 22,13 IN	1094.8	0.7	0.65
WW TC ON HTR 01,15 IN	1197.5	0.9	0.90
WW TC ON HTR 03,15 IN	1189.7	0.9	0.88

Test 11, run 143 (continued)

INSTRUMENT	20-SEC AVG	STD DEV	NORMALIZED TEMP
WW TC ON HTR 08,15 IN	1148.5	0.6	0.78
WW TC ON HTR 10,15 IN	1168.1	0.7	0.83
WW TC ON HTR 15,15 IN	1160.3	0.7	0.81
WW TC ON HTR 19,15 IN	1167.9	0.8	0.83
WW TC ON HTR 25,15 IN	1095.8	0.5	0.65
WW TC ON HTR 36,15 IN	1081.3	0.5	0.61
WW TC ON HTR 01,17 IN	1269.7	1.1	1.08
WW TC AJ HTR 02,17 IN	1227.9	0.9	0.98
WW TC OP HTR 02,17 IN	1247.0	1.0	1.02
WW TC ON HTR 08,17 IN	1187.6	0.8	0.88
WW TC ON HTR 10,17 IN	1200.4	0.7	0.91
WW TC ON HTR 11,17 IN	1182.9	0.7	0.87
WW TC ON HTR 18,17 IN	1204.9	0.9	0.92
WW TC ON HTR 19,17 IN	1196.1	0.9	0.90
WW TC ON HTR 21,17 IN	1167.4	0.8	0.83
WW TC ON HTR 22,17 IN	1185.3	0.8	0.87
WW TC ON HTR 33,17 IN	1125.8	0.6	0.72
WW TC ON HTR 37,17 IN	1141.5	0.6	0.76
WW TC ON HTR 06,19 IN	1310.4	1.1	1.18
WW TC AJ HTR 07,19 IN	1265.0	1.0	1.07
WW TC OP HTR 07,19 IN	1286.8	1.0	1.12
WW TC ON HTR 09,19 IN	1257.8	0.9	1.05
WW TC ON HTR 14,19 IN	1202.3	0.8	0.91
WW TC ON HTR 18,19 IN	1228.5	0.9	0.98
WW TC ON HTR 27,19 IN	1146.3	0.5	0.78
WW TC ON HTR 30,19 IN	1166.4	0.7	0.83
WW TC ON HTR 34,19 IN	1211.6	0.8	0.94
WW TC ON HTR 36,19 IN	1190.3	0.8	0.88
WW TC ON HTR 37,19 IN	1159.7	0.6	0.81
WW TC ON HTR 05,21 IN	1340.2	1.1	1.26
WW TC ON HTR 06,21 IN	1342.2	1.1	1.26
WW TC ON HTR 21,21 IN	1201.3	0.6	0.91
WW TC ON HTR 24,21 IN	1191.7	0.7	0.89
WW TC ON HTR 25,21 IN	1183.8	0.8	0.87
WW TC ON HTR 27,21 IN	1197.3	0.7	0.90
WW TC ON HTR 30,21 IN	1238.4	0.8	1.00
WW TC ON HTR 33,21 IN	1237.8	0.9	1.00
WW TC ON HTR 34,21 IN	1200.2	0.8	0.91
WW TC ON HTR 04,23 IN	1339.6	1.1	1.25
WW TC ON HTR 09,23 IN	1253.7	0.8	1.04
WW TC ON HTR 14,23 IN	1255.4	0.8	1.05
WW TC ON HTR 24,23 IN	1207.1	0.7	0.93
WW TC ON HTR 28,23 IN	1217.6	0.8	0.95
WW TC ON HTR 31,23 IN	1206.8	0.7	0.93
WW TC ON ROD 01,25 IN	1319.9	1.1	1.21
WW TC ON ROD 02,25 IN	1266.0	0.9	1.07
WW TC ON ROD 05,25 IN	1278.8	1.1	1.10
WW TC ON ROD 08,25 IN	1200.5	0.6	0.91
WW TC ON ROD 14,25 IN	1214.3	0.6	0.94
WW TC ON ROD 04,27 IN	1264.8	1.0	1.07
WW TC ON ROD 07,27 IN	1299.2	0.9	1.15

Test 11, run 143 (continued)

INSTRUMENT	20-SEC AVG	STD DEV	NORMALIZED TEMP
WW TC ON ROD 12,27 IN	1210.0	0.9	0.93
WW TC ON ROD 16,27 IN	1202.1	0.8	0.91
WW TC ON ROD 18,27 IN	1221.9	0.8	0.96
WW TC ON ROD 03,29 IN	1293.2	0.9	1.14
WW TC ON ROD 06,29 IN	1286.9	1.2	1.12
WW TC ON ROD 10,29 IN	1220.5	0.7	0.96
WW TC ON ROD 01,37 IN	1290.4	1.0	1.13
WW TC ON ROD 02,37 IN	1249.0	0.9	1.03
WW TC ON ROD 08,37 IN	1213.5	0.6	0.94
WW TC ON ROD 14,37 IN	1241.8	0.8	1.01
WW TC ON ROD 04,51 IN	1255.3	0.8	1.05
WW TC ON ROD 07,51 IN	1261.3	0.8	1.06
WW TC ON ROD 12,51 IN	1227.3	0.6	0.98
WW TC ON ROD 16,51 IN	1233.0	0.4	0.99
WW TC ON ROD 18,51 IN	1228.6	0.4	0.98
WW TC ON ROD 03,63 IN	1260.2	0.9	1.06
WW TC ON ROD 06,63 IN	1249.8	0.7	1.03
WW TC ON ROD 10,63 IN	1246.4	0.7	1.02
DUCT THERMOCOUPLES			
DUCT WALL TC,CH 38,19 IN(DEG F)	1132.4	0.6	0.74
DUCT WALL TC,CH 53,19 IN	1134.8	0.5	0.75
DUCT WALL TC,CH 28,21 IN	1174.2	0.6	0.84
DUCT WALL TC,CH 43,21 IN	1180.6	0.6	0.86
DUCT WALL TC,CH 44,21 IN	1176.5	0.4	0.85
TEST SECTION HOUSING THERMOCOUPLES			
TS SHELL-BOT(DEG F)	841.5	6.4	
TS GUARD HTR-BOT	830.9	1.2	
TS HTR-BOT	788.9	0.6	
TS SHELL-LOW CTR	1163.7	0.2	
TS GUARD HTR-LOW CTR	1121.0	0.4	
TS HTR-LOW CTR	983.7	0.4	
TS SHELL-UP CTR	1226.1	0.3	
TS GUARD HTR-UP CTR	1143.7	0.4	
TS HTR-UP CTR	1056.6	0.4	
TS SHELL-TOP	1237.9	0.3	
TS GUARD HTR-TOP	1173.4	0.5	
TS HTR-TOP	1083.2	0.6	
REFERENCE BOX THERMOCOUPLES			
150 DEG REF BOX 1(DEG F)	150.4	0.5	
150 DEG REF BOX 2	151.7	0.4	
150 DEG REF BOX 3	154.5	0.3	
150 DEG REF BOX 4	152.5	0.4	
150 DEG REF BOX 5	150.6	0.4	
MISCELLANEOUS			
SOD PUMP SPEED(RPM)	609.7	2.2	
EXPANSION TANK LEVEL(% FULL)	71.0	0.1	

TEST SERIES 10(BUNDLE 3C); TEST 11 RUN 144 03/09/78 13 39 27

CONDITIONS:

TEST SECTION FLOW: 0.92 L/S (14.5 GPM)

TEST SECTION POWER

19 CENTRAL HEATERS: 143.4 KW (14.1 KW/M/ROD) (4.3 KW/FT/ROD)

12 EDGE HEATERS: 98.4 KW (15.4 KW/M/ROD) (4.7 KW/FT/ROD)

TOTAL(31 HEATERS): 241.7 KW

TEST SECTION INLET TEMPERATURE: 445 DEG C (834 DEG F)

TEST SECTION OUTLET TEMPERATURE: 679 DEG C (1254 DEG F)

HEAT BALANCE:

HEAT INPUT FROM 31 FUEL PIN SIMULATORS: 241.7 KW

HEAT ABSORBED BY SODIUM=

FLOW X SP.HEAT X (TS OUT TEMP - TS IN TEMP) 228.2 KW

% OF INPUT HEAT ACCOUNTED FOR: 94.4 %

INSTRUMENT	20-SEC AVG	STD DEV
HEATER POWER-CENTRAL RODS(KW)		
HTR POWER IN ROD 1	7.5	0.0
HTR POWER IN RODS 8,9,10	22.7	0.0
HTR POWER IN RODS 14,15,16	22.7	0.0
HTR POWER IN RODS 2,3,11,19	29.9	0.0
HTR POWER IN RODS 5,6,13,17	30.3	0.0
HTR POWER IN RODS 4,7,12,18	30.3	0.0
HEATER POWER-EDGE RODS(KW)		
HTR POWER IN RODS 30,31	16.4	0.0
HTR POWER IN RODS 24,25,27,28	32.9	0.0
HTR POWER IN RODS 33,34	16.4	0.0
HTR POWER IN RODS 21,22,36,37	32.7	0.0
FLOWS		
TEST SECTION(TS) FLOW IN(GPM)	14.5	0.1
TS FLOW OUT(GPM)	15.3	0.1
TS BYPASS FLOW(GPM)	0.1	0.2
LOOP FLOW TOTAL(GPM)	14.2	0.2
RADIATOR AIR FLOW(CFM)	2.7	0.2
PRESSURES		
TS IN PRESS(PSIG)	14.4	0.1
TS OUT PRESS(PSIG)	6.2	0.1
PUMP OUT PRESS(PSIG)	9.1	0.1
TS LINE PRESS IN(PSIG)	13.4	0.1
EXP TANK ARGON PRESS(PSIG)	2.7	0.1
TS BYP LINE PRESS IN(PSIG)	14.5	0.1
TS BYP LINE PRESS OUT(PSIG)	6.9	0.1

Test 11, run 144 (continued)

INSTRUMENT	20-SEC AVG	STD DEV	NORMALIZED TEMP
LOOP THERMOCOUPLES			
TEST SECT INLET WELL(DEG F)	834.4	0.9	
TEST SECT OUTLET WELL(DEG F)	1254.2	0.4	
PUMP IN PIPE WALL TC	828.6	0.4	
PUMP OUT PIPE WALL TC	824.8	0.5	
RAD IN PIPE WALL TC	1179.6	12.2	
RAD OUT PIPE WALL TC	824.8	6.4	
HEATER INTERNAL THERMOCOUPLES			
HTR TC IN HTR 08,12AB IN(DEG F)	1128.4	0.5	0.70
HTR TC IN HTR 13,12AB IN	1120.8	0.5	0.68
HTR TC IN HTR 18,12AB IN	1112.6	0.5	0.66
HTR TC IN HTR 22,12AB IN	1129.8	0.3	0.70
HTR TC IN HTR 08,12BC IN	1125.9	0.5	0.69
HTR TC IN HTR 13,12BC IN	1121.6	0.5	0.68
HTR TC IN HTR 18,12BC IN	1113.1	0.4	0.66
HTR TC IN HTR 22,12BC IN	1127.4	0.4	0.70
HTR TC IN HTR 09,15AB IN	1214.2	0.5	0.90
HTR TC IN HTR 10,15AB IN	1200.2	0.5	0.87
HTR TC IN HTR 16,15BC IN	1175.7	0.5	0.81
HTR TC IN HTR 25,15BC IN	1177.1	0.5	0.82
HTR TC IN HTR 02,15.1 IN	1269.6	0.7	1.04
HTR TC IN HTR 03,15.1 IN	1285.8	0.7	1.08
HTR TC IN HTR 06,15.1 IN	1320.9	0.6	1.16
HTR TC IN HTR 15,15.1 IN	1237.8	0.5	0.96
HTR TC IN HTR 24,15.1 IN	1205.8	0.4	0.88
HTR TC IN HTR 33,15.1 IN	1198.0	0.4	0.87
HTR TC IN HTR 36,15.1 IN	1180.3	0.6	0.82
HTR TC IN HTR 02,15.4 IN	1300.8	0.5	1.11
HTR TC IN HTR 03,15.4 IN	1285.9	0.6	1.08
HTR TC IN HTR 06,15.4 IN	1326.8	0.6	1.17
HTR TC IN HTR 15,15.4 IN	1227.3	0.5	0.94
HTR TC IN HTR 24,15.4 IN	1215.1	0.3	0.91
HTR TC IN HTR 33,15.4 IN	1200.3	0.5	0.87
HTR TC IN HTR 34,15.4 IN	1200.3	1.7	0.87
HTR TC IN HTR 36,15.4 IN	1177.7	0.5	0.82
HTR TC IN HTR 02,15.6 IN	1297.4	0.6	1.10
HTR TC IN HTR 03,15.6 IN	1275.8	0.6	1.05
HTR TC IN HTR 06,15.6 IN	1346.1	0.6	1.22
HTR TC IN HTR 15,15.6 IN	1222.7	0.5	0.93
HTR TC IN HTR 24,15.6 IN	1212.2	0.4	0.90
HTR TC IN HTR 33,15.6 IN	1200.5	0.5	0.87
HTR TC IN HTR 34,15.6 IN	1189.3	1.0	0.85
HTR TC IN HTR 36,15.6 IN	1168.7	0.4	0.80
HTR TC IN HTR 03,15.9 IN	1226.2	0.5	0.93
HTR TC IN HTR 06,15.9 IN	1343.6	0.6	1.21
HTR TC IN HTR 15,15.9 IN	1209.8	0.5	0.89
HTR TC IN HTR 24,15.9 IN	1211.6	0.4	0.90
HTR TC IN HTR 33,15.9 IN	1195.5	0.4	0.86

Test 11, run 144 (continued)

INSTRUMENT	20-SEC AVG	STD DEV	NORMALIZED TEMP
HTR TC IN HTR 34,15.9 IN	1182.9	0.6	0.83
HTR TC IN HTR 36,15.9 IN	1164.2	0.5	0.79
HTR TC IN HTR 04,16.1 IN	1303.6	0.5	1.12
HTR TC IN HTR 05,16.1 IN	1294.5	0.7	1.10
HTR TC IN HTR 07,16.1 IN	1295.1	0.5	1.10
HTR TC IN HTR 21,16.1 IN	1201.3	0.4	0.87
HTR TC IN HTR 27,16.1 IN	1210.7	0.5	0.90
HTR TC IN HTR 04,16.4 IN	1305.3	0.5	1.12
HTR TC IN HTR 05,16.4 IN	1297.3	0.4	1.10
HTR TC IN HTR 07,16.4 IN	1296.9	0.6	1.10
HTR TC IN HTR 21,16.4 IN	1205.4	0.4	0.88
HTR TC IN HTR 27,16.4 IN	1214.6	0.4	0.91
HTR TC IN HTR 04,16.6 IN	1291.9	0.5	1.09
HTR TC IN HTR 05,16.6 IN	1300.0	0.5	1.11
HTR TC IN HTR 07,16.6 IN	1284.1	0.5	1.07
HTR TC IN HTR 21,16.6 IN	1211.1	0.3	0.90
HTR TC IN HTR 27,16.6 IN	1208.3	0.4	0.89
HTR TC IN HTR 04,16.9 IN	1285.2	0.5	1.07
HTR TC IN HTR 07,16.9 IN	1284.2	0.5	1.07
HTR TC IN HTR 21,16.9 IN	1210.3	0.5	0.90
HTR TC IN HTR 27,16.9 IN	1203.0	0.5	0.88
HTR TC IN HTR 11,18AB IN	1282.0	0.3	1.07
HTR TC IN HTR 12,18AB IN	1257.5	0.5	1.01
HTR TC IN HTR 14,18AB IN	1196.3	0.4	0.86
HTR TC IN HTR 30,18AB IN	1253.7	0.5	1.00
HTR TC IN HTR 11,18BC IN	1282.1	0.5	1.07
HTR TC IN HTR 12,18BC IN	1255.9	0.6	1.00
HTR TC IN HTR 14,18BC IN	1198.4	0.6	0.87
HTR TC IN HTR 17,18BC IN	1274.9	0.5	1.05
HTR TC IN HTR 30,18BC IN	1252.8	0.4	1.00
WIRE WRAP THERMOCOUPLES			
WW TC ON HTR 12,-1 IN(DEG F)	840.2	0.4	0.01
WW TC ON HTR 16,-1 IN	840.1	0.4	0.01
WW TC ON HTR 12,01 IN	867.7	0.4	0.08
WW TC ON HTR 16,09 IN	1038.7	0.5	0.49
WW TC ON HTR 04,11 IN	1100.9	0.7	0.63
WW TC ON HTR 05,11 IN	1092.5	0.4	0.61
WW TC ON HTR 13,11 IN	1092.7	0.4	0.62
WW TC ON HTR 17,11 IN	1087.4	0.4	0.60
WW TC ON HTR 28,11 IN	1075.4	0.5	0.57
WW TC ON HTR 31,11 IN	1066.0	0.4	0.55
WW TC ON HTR 03,13 IN	1132.8	0.6	0.71
WW TC ON HTR 11,13 IN	1136.3	0.7	0.72
WW TC ON HTR 13,13 IN	1136.3	0.6	0.72
WW TC ON HTR 15,13 IN	1134.6	0.5	0.72
WW TC ON HTR 17,13 IN	1132.5	0.5	0.71
WW TC ON HTR 22,13 IN	1113.4	0.7	0.66
WW TC ON HTR 01,15 IN	1198.3	0.5	0.87
WW TC ON HTR 03,15 IN	1192.7	0.5	0.85

Test 11, run 144 (continued)

INSTRUMENT	20-SEC AVG	STD DEV	NORMALIZED TEMP
WW TC ON HTR 08,15 IN	1157.2	0.6	0.77
WW TC ON HTR 10,15 IN	1174.3	0.5	0.81
WW TC ON HTR 15,15 IN	1173.4	0.5	0.81
WW TC ON HTR 19,15 IN	1173.7	0.5	0.81
WW TC ON HTR 25,15 IN	1114.2	0.5	0.67
WW TC ON HTR 36,15 IN	1101.8	0.3	0.64
WW TC ON HTR 01,17 IN	1272.0	0.6	1.04
WW TC AJ HTR 02,17 IN	1231.8	0.6	0.95
WW TC OP HTR 02,17 IN	1250.7	0.6	0.99
WW TC ON HTR 08,17 IN	1197.7	0.5	0.87
WW TC ON HTR 10,17 IN	1210.1	0.5	0.90
WW TC ON HTR 11,17 IN	1197.1	0.5	0.86
WW TC ON HTR 18,17 IN	1212.5	0.5	0.90
WW TC ON HTR 19,17 IN	1201.8	0.4	0.88
WW TC ON HTR 21,17 IN	1186.4	0.6	0.84
WW TC ON HTR 22,17 IN	1200.1	0.6	0.87
WW TC ON HTR 33,17 IN	1146.0	0.5	0.74
WW TC ON HTR 37,17 IN	1162.2	0.3	0.78
WW TC ON HTR 06,19 IN	1314.3	0.5	1.14
WW TC AJ HTR 07,19 IN	1269.3	0.8	1.04
WW TC OP HTR 07,19 IN	1289.8	0.7	1.08
WW TC ON HTR 09,19 IN	1266.1	0.5	1.03
WW TC ON HTR 14,19 IN	1217.8	0.5	0.91
WW TC ON HTR 18,19 IN	1238.0	0.5	0.96
WW TC ON HTR 27,19 IN	1171.0	0.4	0.80
WW TC ON HTR 30,19 IN	1188.5	0.3	0.84
WW TC ON HTR 34,19 IN	1229.7	0.6	0.94
WW TC ON HTR 36,19 IN	1210.5	0.5	0.90
WW TC ON HTR 37,19 IN	1184.2	0.4	0.83
WW TC ON HTR 05,21 IN	1345.5	0.4	1.22
WW TC ON HTR 06,21 IN	1345.9	0.6	1.22
WW TC ON HTR 21,21 IN	1223.8	0.5	0.93
WW TC ON HTR 24,21 IN	1216.9	0.4	0.91
WW TC ON HTR 25,21 IN	1208.3	0.5	0.89
WW TC ON HTR 27,21 IN	1221.9	0.5	0.92
WW TC ON HTR 30,21 IN	1259.6	0.5	1.01
WW TC ON HTR 33,21 IN	1260.2	0.5	1.01
WW TC ON HTR 34,21 IN	1224.1	0.4	0.93
WW TC ON HTR 04,23 IN	1343.3	0.5	1.21
WW TC ON HTR 09,23 IN	1268.1	0.4	1.03
WW TC ON HTR 14,23 IN	1271.4	0.5	1.04
WW TC ON HTR 24,23 IN	1229.4	0.8	0.94
WW TC ON HTR 28,23 IN	1239.4	0.4	0.96
WW TC ON HTR 31,23 IN	1230.8	0.5	0.94
WW TC ON ROD 01,25 IN	1326.2	0.5	1.17
WW TC ON ROD 02,25 IN	1278.0	0.4	1.06
WW TC ON ROD 05,25 IN	1290.5	0.6	1.09
WW TC ON ROD 08,25 IN	1222.0	0.4	0.92
WW TC ON ROD 14,25 IN	1236.4	0.5	0.96
WW TC ON ROD 04,27 IN	1280.1	0.5	1.06
WW TC ON ROD 07,27 IN	1305.7	0.6	1.12

Test 11, run 144 (continued)

INSTRUMENT	20-SEC AVG	STD DEV	NORMALIZED TEMP
WW TC ON ROD 12,27 IN	1231.0	0.5	0.94
WW TC ON ROD 16,27 IN	1225.7	0.5	0.93
WW TC ON ROD 18,27 IN	1241.5	0.4	0.97
WW TC ON ROD 03,29 IN	1301.8	0.5	1.11
WW TC ON ROD 06,29 IN	1298.2	0.5	1.10
WW TC ON ROD 10,29 IN	1238.5	0.5	0.96
WW TC ON ROD 01,37 IN	1300.5	0.5	1.11
WW TC ON ROD 02,37 IN	1264.5	0.5	1.02
WW TC ON ROD 08,37 IN	1233.0	0.4	0.95
WW TC ON ROD 14,37 IN	1259.4	0.4	1.01
WW TC ON ROD 04,51 IN	1270.4	0.4	1.04
WW TC ON ROD 07,51 IN	1274.5	0.5	1.05
WW TC ON ROD 12,51 IN	1245.1	0.3	0.98
WW TC ON ROD 16,51 IN	1251.1	0.3	0.99
WW TC ON ROD 18,51 IN	1247.2	0.4	0.98
WW TC ON ROD 03,63 IN	1274.3	0.4	1.05
WW TC ON ROD 06,63 IN	1265.5	0.5	1.03
WW TC ON ROD 10,63 IN	1261.5	0.4	1.02
DUCT THERMOCOUPLES			
DUCT WALL TC,CH 38,19 IN(DEG F)	1153.2	0.4	0.76
DUCT WALL TC,CH 53,19 IN	1157.5	0.4	0.77
DUCT WALL TC,CH 28,21 IN	1195.5	0.3	0.86
DUCT WALL TC,CH 43,21 IN	1204.5	0.3	0.88
DUCT WALL TC,CH 44,21 IN	1200.7	0.4	0.87
TEST SECTION HOUSING THERMOCOUPLES			
TS SHELL-BOT(DEG F)	845.2	8.6	
TS GUARD HTR-BOT	831.6	0.5	
TS HTR-BOT	789.4	0.5	
TS SHELL-LOW CTR	1186.1	0.3	
TS GUARD HTR-LOW CTR	1138.9	0.3	
TS HTR-LOW CTR	995.2	0.7	
TS SHELL-UP CTR	1245.4	0.3	
TS GUARD HTR-UP CTR	1158.6	0.3	
TS HTR-UP CTR	1069.3	0.3	
TS SHELL-TOP	1255.4	0.3	
TS GUARD HTR-TOP	1188.7	0.2	
TS HTR-TOP	1095.3	0.4	
REFERENCE BOX THERMOCOUPLES			
150 DEG REF BOX 1(DEG F)	150.3	0.3	
150 DEG REF BOX 2	151.3	0.3	
150 DEG REF BOX 3	154.0	0.3	
150 DEG REF BOX 4	152.4	0.4	
150 DEG REF BOX 5	151.3	0.2	
MISCELLANEOUS			
SOD PUMP SPEED(RPM)	610.0	17.7	
EXPANSION TANK LEVEL(% FULL)	70.4	0.2	

TEST SERIES 10(BUNDLE 3C); TEST 11 RUN 151 03/03/78 10 58 54

CONDITIONS:

TEST SECTION FLOW: 4.53 L/S (71.5 GPM)

TEST SECTION POWER

19 CENTRAL HEATERS:	249.6 KW	(24.6 KW/M/ROD)	(7.5 KW/FT/ROD)
12 EDGE HEATERS:	0.0 KW	(0.0 KW/M/ROD)	(0.0 KW/FT/ROD)
TOTAL(31 HEATERS):	249.6 KW		

TEST SECTION INLET TEMPERATURE: 444 DEG C (831 DEG F)

TEST SECTION OUTLET TEMPERATURE: 495 DEG C (924 DEG F)

HEAT BALANCE:

HEAT INPUT FROM 31 FUEL PIN SIMULATORS:	249.6 KW
HEAT ABSORBED BY SODIUM= FLOW X SP.HEAT X (TS OUT TEMP - TS IN TEMP)	249.9 KW
% OF INPUT HEAT ACCOUNTED FOR:	100.1 %

INSTRUMENT	20-SEC AVG	STD DEV
HEATER POWER-CENTRAL RODS(KW)		
HTR POWER IN ROD 1	13.3	0.0
HTR POWER IN RODS 8,9,10	39.6	0.0
HTR POWER IN RODS 14,15,16	39.6	0.0
HTR POWER IN RODS 2,3,11,19	52.2	0.0
HTR POWER IN RODS 5,6,13,17	52.6	0.0
HTR POWER IN RODS 4,7,12,18	52.3	0.0
HEATER POWER-EDGE RODS(KW)		
HTR POWER IN RODS 30,31	-0.0	0.0
HTR POWER IN RODS 24,25,27,28	-0.3	0.0
HTR POWER IN RODS 33,34	-0.0	0.0
HTR POWER IN RODS 21,22,36,37	-0.0	0.0
FLOWS		
TEST SECTION(TS) FLOW IN(GPM)	71.5	0.1
TS FLOW OUT(GPM)	72.1	0.3
TS BYPASS FLOW(GPM)	0.9	0.1
LOOP FLOW TOTAL(GPM)	71.1	0.5
RADIATOR AIR FLOW(CFM)	8.4	0.4
PRESSURES		
TS IN PRESS(PSIG)	95.2	0.1
TS OUT PRESS(PSIG)	8.1	0.1
PUMP OUT PRESS(PSIG)	92.1	0.1
TS LINE PRESS IN(PSIG)	95.8	0.1
EXP TANK ARGON PRESS(PSIG)	4.8	0.1
TS BYP LINE PRESS IN(PSIG)	96.9	0.1
TS BYP LINE PRESS OUT(PSIG)	8.9	0.1

Test 11, run 151 (continued)

INSTRUMENT	20-SEC AVG	STD DEV	NORMALIZED TEMP
LOOP THERMOCOUPLES			
TEST SECT INLET WELL(DEG F)	831.7	0.3	
TEST SECT OUTLET WELL(DEG F)	924.4	0.4	
PUMP IN PIPE WALL TC	833.7	3.5	
PUMP OUT PIPE WALL TC	825.8	0.4	
RAD IN PIPE WALL TC	867.6	3.3	
RAD OUT PIPE WALL TC	827.0	1.2	
HEATER INTERNAL THERMOCOUPLES			
HTR TC IN HTR 08,12AB IN(DEG F)	982.0	0.9	1.62
HTR TC IN HTR 13,12AB IN	933.2	0.7	1.10
HTR TC IN HTR 18,12AB IN	962.3	0.4	1.41
HTR TC IN HTR 22,12AB IN	884.9	2.7	0.57
HTR TC IN HTR 08,12BC IN	976.3	0.4	1.56
HTR TC IN HTR 13,12BC IN	946.6	0.5	1.24
HTR TC IN HTR 18,12BC IN	963.7	0.4	1.42
HTR TC IN HTR 22,12BC IN	885.8	0.5	0.58
HTR TC IN HTR 09,15AB IN	1010.9	0.5	1.93
HTR TC IN HTR 10,15AB IN	1002.7	0.3	1.85
HTR TC IN HTR 16,15BC IN	966.0	1.1	1.45
HTR TC IN HTR 25,15BC IN	866.6	0.3	0.38
HTR TC IN HTR 02,15.1 IN	1028.3	0.7	2.12
HTR TC IN HTR 03,15.1 IN	1037.0	0.5	2.22
HTR TC IN HTR 06,15.1 IN	1035.6	0.4	2.20
HTR TC IN HTR 15,15.1 IN	1023.6	1.4	2.07
HTR TC IN HTR 24,15.1 IN	903.6	0.3	0.78
HTR TC IN HTR 33,15.1 IN	892.4	1.1	0.66
HTR TC IN HTR 36,15.1 IN	870.0	1.1	0.41
HTR TC IN HTR 02,15.4 IN	1046.4	1.3	2.32
HTR TC IN HTR 03,15.4 IN	1050.6	0.6	2.36
HTR TC IN HTR 06,15.4 IN	1038.6	0.5	2.23
HTR TC IN HTR 15,15.4 IN	1018.5	0.4	2.02
HTR TC IN HTR 24,15.4 IN	902.8	0.5	0.77
HTR TC IN HTR 33,15.4 IN	895.2	0.6	0.69
HTR TC IN HTR 34,15.4 IN	904.5	0.7	0.79
HTR TC IN HTR 36,15.4 IN	867.7	0.5	0.39
HTR TC IN HTR 02,15.6 IN	1045.5	0.5	2.31
HTR TC IN HTR 03,15.6 IN	1046.2	1.0	2.32
HTR TC IN HTR 06,15.6 IN	1053.4	0.8	2.39
HTR TC IN HTR 15,15.6 IN	1016.9	0.4	2.00
HTR TC IN HTR 24,15.6 IN	893.2	0.4	0.66
HTR TC IN HTR 33,15.6 IN	898.5	0.7	0.72
HTR TC IN HTR 34,15.6 IN	897.0	0.9	0.70
HTR TC IN HTR 36,15.6 IN	863.5	0.4	0.34
HTR TC IN HTR 03,15.9 IN	1025.6	0.5	2.09
HTR TC IN HTR 06,15.9 IN	1081.0	2.0	2.69
HTR TC IN HTR 15,15.9 IN	1005.8	0.4	1.88
HTR TC IN HTR 24,15.9 IN	893.4	0.5	0.67
HTR TC IN HTR 33,15.9 IN	895.5	0.2	0.69

Test 11, run 151 (continued)

INSTRUMENT	20-SEC AVG	STD DEV	NORMALIZED TEMP
HTR TC IN HTR 34,15.9 IN	892.6	0.5	0.66
HTR TC IN HTR 36,15.9 IN	861.9	1.0	0.33
HTR TC IN HTR 04,16.1 IN	1040.8	0.4	2.26
HTR TC IN HTR 05,16.1 IN	1037.5	1.5	2.22
HTR TC IN HTR 07,16.1 IN	1042.0	0.4	2.27
HTR TC IN HTR 21,16.1 IN	864.1	0.3	0.35
HTR TC IN HTR 27,16.1 IN	904.4	0.4	0.78
HTR TC IN HTR 04,16.4 IN	1054.1	0.6	2.40
HTR TC IN HTR 05,16.4 IN	1039.8	0.4	2.25
HTR TC IN HTR 07,16.4 IN	1041.9	0.5	2.27
HTR TC IN HTR 21,16.4 IN	896.8	0.6	0.70
HTR TC IN HTR 27,16.4 IN	924.8	0.8	1.00
HTR TC IN HTR 04,16.6 IN	1055.8	0.5	2.42
HTR TC IN HTR 05,16.6 IN	1042.9	1.0	2.28
HTR TC IN HTR 07,16.6 IN	1036.3	1.0	2.21
HTR TC IN HTR 21,16.6 IN	911.5	1.0	0.86
HTR TC IN HTR 27,16.6 IN	927.3	0.8	1.03
HTR TC IN HTR 04,16.9 IN	1045.8	0.8	2.31
HTR TC IN HTR 07,16.9 IN	1035.0	2.5	2.19
HTR TC IN HTR 21,16.9 IN	880.2	0.4	0.52
HTR TC IN HTR 27,16.9 IN	907.0	0.5	0.81
HTR TC IN HTR 11,18AB IN	1035.9	0.5	2.20
HTR TC IN HTR 12,18AB IN	1012.3	0.5	1.95
HTR TC IN HTR 14,18AB IN	959.0	0.8	1.37
HTR TC IN HTR 30,18AB IN	1704.3	1.1	9.42
HTR TC IN HTR 11,18BC IN	1035.9	0.7	2.20
HTR TC IN HTR 12,18BC IN	1016.0	0.7	1.99
HTR TC IN HTR 14,18BC IN	971.6	0.5	1.51
HTR TC IN HTR 17,18BC IN	1033.7	0.4	2.18
HTR TC IN HTR 30,18BC IN	1720.8	1.1	9.60
WIRE WRAP THERMOCOUPLES			
WW TC ON HTR 12,-1 IN(DEG F)	836.8	0.5	0.05
WW TC ON HTR 16,-1 IN	835.6	1.0	0.04
WW TC ON HTR 12,01 IN	847.8	2.6	0.17
WW TC ON HTR 16,09 IN	910.6	1.0	0.85
WW TC ON HTR 04,11 IN	936.5	0.5	1.13
WW TC ON HTR 05,11 IN	925.6	0.8	1.01
WW TC ON HTR 13,11 IN	924.1	0.4	1.00
WW TC ON HTR 17,11 IN	911.8	0.4	0.86
WW TC ON HTR 28,11 IN	889.1	0.9	0.62
WW TC ON HTR 31,11 IN	864.3	0.9	0.35
WW TC ON HTR 03,13 IN	935.4	0.5	1.12
WW TC ON HTR 11,13 IN	943.0	0.5	1.20
WW TC ON HTR 13,13 IN	930.0	0.3	1.06
WW TC ON HTR 15,13 IN	924.2	0.4	1.00
WW TC ON HTR 17,13 IN	918.7	2.0	0.94
WW TC ON HTR 22,13 IN	857.4	0.4	0.28
WW TC ON HTR 01,15 IN	970.6	1.0	1.50
WW TC ON HTR 03,15 IN	962.6	0.5	1.41

Test 11, run 151 (continued)

INSTRUMENT	20-SEC AVG	STD DEV	NORMALIZED TEMP
WW TC ON HTR C8,15 IN	935.0	0.4	1.11
WW TC ON HTR 10,15 IN	946.2	0.7	1.24
WW TC ON HTR 15,15 IN	924.2	0.4	1.00
WW TC ON HTR 19,15 IN	943.5	0.4	1.21
WW TC ON HTR 25,15 IN	869.1	1.4	0.40
WW TC ON HTR 36,15 IN	846.4	2.2	0.16
WW TC ON HTR 01,17 IN	989.1	0.6	1.70
WW TC AJ HTR C2,17 IN	961.5	0.5	1.40
WW TC OP HTR 02,17 IN	968.9	1.5	1.48
WW TC ON HTR 08,17 IN	945.9	0.3	1.23
WW TC ON HTR 10,17 IN	937.3	0.4	1.14
WW TC ON HTR 11,17 IN	932.9	0.5	1.09
WW TC ON HTR 18,17 IN	953.0	0.6	1.31
WW TC ON HTR 19,17 IN	953.6	0.7	1.32
WW TC ON HTR 21,17 IN	886.4	1.1	0.59
WW TC ON HTR 22,17 IN	919.7	0.5	0.95
WW TC ON HTR 33,17 IN	849.9	0.4	0.20
WW TC ON HTR 37,17 IN	865.9	0.4	0.37
WW TC ON HTR 06,19 IN	1008.5	0.5	1.91
WW TC AJ HTR C7,19 IN	980.7	0.5	1.61
WW TC OP HTR 07,19 IN	990.2	0.4	1.71
WW TC ON HTR 09,19 IN	987.6	1.3	1.68
WW TC ON HTR 14,19 IN	913.8	0.4	0.89
WW TC ON HTR 18,19 IN	966.4	1.0	1.45
WW TC ON HTR 27,19 IN	855.5	1.6	0.26
WW TC ON HTR 30,19 IN	860.5	0.9	0.31
WW TC ON HTR 34,19 IN	905.4	0.3	0.80
WW TC ON HTR 36,19 IN	894.0	0.3	0.67
WW TC ON HTR 37,19 IN	866.6	1.2	0.38
WW TC ON HTR 05,21 IN	1009.7	0.4	1.92
WW TC ON HTR C6,21 IN	1017.6	0.6	2.01
WW TC ON HTR 21,21 IN	882.2	0.3	0.54
WW TC ON HTR 24,21 IN	861.4	0.5	0.32
WW TC ON HTR 25,21 IN	863.1	0.8	0.34
WW TC ON HTR 27,21 IN	871.3	1.3	0.43
WW TC ON HTR 30,21 IN	907.3	0.5	0.82
WW TC ON HTR 33,21 IN	907.5	0.4	0.82
WW TC ON HTR 34,21 IN	883.1	1.8	0.55
WW TC ON HTR 04,23 IN	1010.0	1.8	1.92
WW TC ON HTR 09,23 IN	937.2	0.5	1.14
WW TC ON HTR 14,23 IN	951.8	1.0	1.30
WW TC ON HTR 24,23 IN	864.0	0.3	0.35
WW TC ON HTR 28,23 IN	898.2	0.4	0.72
WW TC ON HTR 31,23 IN	882.6	0.6	0.55
WW TC ON ROD 01,25 IN	1004.9	2.4	1.87
WW TC ON ROD 02,25 IN	947.9	0.4	1.25
WW TC ON ROD 05,25 IN	964.4	0.5	1.43
WW TC ON ROD C8,25 IN	883.9	0.6	0.56
WW TC ON ROD 14,25 IN	896.1	0.6	0.69
WW TC ON ROD C4,27 IN	947.3	1.0	1.25
WW TC ON ROD 07,27 IN	982.0	0.6	1.62

Test 11, run 151 (continued)

INSTRUMENT	20-SEC AVG	STD DEV	NORMALIZED TEMP
WW TC ON ROD 12,27 IN	897.1	0.8	0.71
WW TC ON ROD 16,27 IN	879.5	0.4	0.52
WW TC ON ROD 18,27 IN	894.8	0.4	0.68
WW TC ON ROD 03,29 IN	988.3	0.4	1.69
WW TC ON ROD 06,29 IN	964.4	1.3	1.43
WW TC ON ROD 10,29 IN	911.5	4.3	0.86
WW TC ON ROD 01,37 IN	975.9	0.4	1.56
WW TC ON ROD 02,37 IN	920.6	0.4	0.96
WW TC ON ROD 08,37 IN	896.6	0.4	0.70
WW TC ON ROD 14,37 IN	928.8	2.9	1.05
WW TC ON ROD 04,51 IN	947.5	0.3	1.25
WW TC ON ROD 07,51 IN	946.1	1.0	1.23
WW TC ON ROD 12,51 IN	909.8	0.5	0.84
WW TC ON ROD 16,51 IN	917.3	1.2	0.92
WW TC ON ROD 18,51 IN	904.6	0.3	0.79
WW TC ON ROD 03,63 IN	953.8	1.7	1.32
WW TC ON ROD 06,63 IN	932.3	0.4	1.09
WW TC ON ROD 10,63 IN	931.3	0.5	1.07
DUCT THERMOCOUPLES			
DUCT WALL TC,CH 38,19 IN(DEG F)	862.4	0.3	0.33
DUCT WALL TC,CH 53,19 IN	855.8	0.3	0.26
DUCT WALL TC,CH 28,21 IN	873.1	0.2	0.45
DUCT WALL TC,CH 43,21 IN	866.0	3.1	0.37
DUCT WALL TC,CH 44,21 IN	869.6	0.4	0.41
TEST SECTION HOUSING THERMOCOUPLES			
TS SHELL-BOT(DEG F)	837.7	1.2	
TS GUARD HTR-BOT	816.9	0.5	
TS HTR-BOT	773.2	1.5	
TS SHELL-LOW CTR	869.0	2.3	
TS GUARD HTR-LOW CTR	859.9	0.3	
TS HTR-LOW CTR	766.4	0.6	
TS SHELL-UP CTR	904.1	0.6	
TS GUARD HTR-UP CTR	881.5	0.5	
TS HTR-UP CTR	837.0	0.8	
TS SHELL-TOP	921.1	0.4	
TS GUARD HTR-TOP	910.5	0.5	
TS HTR-TOP	844.4	1.3	
REFERENCE BOX THERMOCOUPLES			
150 DEG REF BOX 1(DEG F)	150.6	0.6	
150 DEG REF BOX 2	151.8	0.4	
150 DEG REF BOX 3	154.3	0.7	
150 DEG REF BOX 4	152.4	0.4	
150 DEG REF BOX 5	150.5	0.4	
MISCELLANEOUS			
SOD PUMP SPEED(RPM)	2830.1	31.0	
EXPANSION TANK LEVEL(% FULL)	74.1	0.1	

TEST SERIES 10(BUNDLE 3C); TEST 11 RUN 152 03/08/78 9 50 20

CONDITIONS:

TEST SECTION FLOW: 4.52 L/S (71.3 GPM)

TEST SECTION POWER

19 CENTRAL HEATERS: 245.5 KW (24.2 KW/M/ROD) (7.4 KW/FT/ROD)

12 EDGE HEATERS: 140.2 KW (21.9 KW/M/ROD) (6.7 KW/FT/ROD)

TOTAL(31 HEATERS): 385.7 KW

TEST SECTION INLET TEMPERATURE: 529 DEG C (984 DEG F)

TEST SECTION OUTLET TEMPERATURE: 608 DEG C (1127 DEG F)

HEAT BALANCE:

HEAT INPUT FROM 31 FUEL PIN SIMULATORS: 385.7 KW

HEAT ABSORBED BY SODIUM=

FLOW X SP.HEAT X (TS OUT TEMP - TS IN TEMP) 372.2 KW

% OF INPUT HEAT ACCOUNTED FOR: 96.5 %

INSTRUMENT	20-SEC AVG	STD DEV
HEATER POWER-CENTRAL RODS(KW)		
HTR POWER IN ROD 1	12.9	0.0
HTR POWER IN RODS 8,9,10	38.8	0.0
HTR POWER IN RODS 14,15,16	39.0	0.0
HTR POWER IN RODS 2,3,11,19	51.6	0.0
HTR POWER IN RODS 5,6,13,17	51.6	0.0
HTR POWER IN RODS 4,7,12,18	51.6	0.0
HEATER POWER-EDGE RODS(KW)		
HTR POWER IN RODS 30,31	23.4	0.0
HTR POWER IN RODS 24,25,27,28	46.7	0.0
HTR POWER IN RODS 33,34	23.3	0.0
HTR POWER IN RODS 21,22,36,37	46.9	0.0
FLOWS		
TEST SECTION(TS) FLOW IN(GPM)	71.3	0.1
TS FLOW OUT(GPM)	72.4	0.2
TS BYPASS FLOW(GPM)	-0.8	0.2
LOOP FLOW TOTAL(GPM)	71.1	0.4
RADIATOR AIR FLOW(CFM)	16.6	0.9
PRESSURES		
TS IN PRESS(PSIG)	89.6	0.1
TS OUT PRESS(PSIG)	8.2	0.1
PUMP OUT PRESS(PSIG)	86.6	0.1
TS LINE PRESS IN(PSIG)	90.3	0.1
EXP TANK ARGON PRESS(PSIG)	4.9	0.1
TS BYP LINE PRESS IN(PSIG)	91.2	0.1
TS BYP LINE PRESS OUT(PSIG)	8.9	0.1

Test 11, run 152 (continued)

INSTRUMENT	20-SEC AVG	STD DEV	NORMALIZED TEMP
LOOP THERMOCOUPLES			
TEST SECT INLET WELL(DEG F)	984.7	0.5	
TEST SECT OUTLET WELL(DEG F)	1127.3	0.5	
PUMP IN PIPE WALL TC	977.7	6.5	
PUMP OUT PIPE WALL TC	978.0	0.5	
RAD IN PIPE WALL TC	1048.6	5.7	
RAD OUT PIPE WALL TC	979.7	1.3	
HEATER INTERNAL THERMOCOUPLES			
HTR TC IN HTR 08,12AB IN(DEG F)	1141.9	0.4	1.10
HTR TC IN HTR 13,12AB IN	1129.4	0.4	1.01
HTR TC IN HTR 18,12AB IN	1141.9	0.4	1.10
HTR TC IN HTR 22,12AB IN	1128.1	0.3	1.01
HTR TC IN HTR 08,12BC IN	1134.9	0.3	1.05
HTR TC IN HTR 13,12BC IN	1131.0	0.5	1.03
HTR TC IN HTR 18,12BC IN	1143.2	0.4	1.11
HTR TC IN HTR 22,12BC IN	1125.5	0.4	0.99
HTR TC IN HTR 09,15AB IN	1170.3	0.4	1.30
HTR TC IN HTR 10,15AB IN	1161.9	0.3	1.24
HTR TC IN HTR 16,15BC IN	1154.1	0.4	1.19
HTR TC IN HTR 25,15BC IN	1139.5	0.4	1.09
HTR TC IN HTR 02,15.1 IN	1186.1	0.6	1.41
HTR TC IN HTR 03,15.1 IN	1198.8	0.6	1.50
HTR TC IN HTR 06,15.1 IN	1190.7	0.4	1.44
HTR TC IN HTR 15,15.1 IN	1181.3	0.4	1.38
HTR TC IN HTR 24,15.1 IN	1150.5	0.4	1.16
HTR TC IN HTR 33,15.1 IN	1150.8	0.4	1.16
HTR TC IN HTR 36,15.1 IN	1144.8	0.2	1.12
HTR TC IN HTR 02,15.4 IN	1205.3	0.5	1.55
HTR TC IN HTR 03,15.4 IN	1199.8	0.5	1.51
HTR TC IN HTR 06,15.4 IN	1193.6	0.3	1.46
HTR TC IN HTR 15,15.4 IN	1169.6	0.8	1.30
HTR TC IN HTR 24,15.4 IN	1163.9	0.3	1.26
HTR TC IN HTR 33,15.4 IN	1152.8	0.3	1.18
HTR TC IN HTR 34,15.4 IN	1145.1	2.0	1.12
HTR TC IN HTR 36,15.4 IN	1143.9	0.4	1.12
HTR TC IN HTR 02,15.6 IN	1205.8	0.5	1.55
HTR TC IN HTR 03,15.6 IN	1194.8	0.4	1.47
HTR TC IN HTR 06,15.6 IN	1208.4	0.4	1.57
HTR TC IN HTR 15,15.6 IN	1167.2	0.3	1.28
HTR TC IN HTR 24,15.6 IN	1160.8	0.4	1.23
HTR TC IN HTR 33,15.6 IN	1151.1	0.4	1.17
HTR TC IN HTR 34,15.6 IN	1149.1	1.4	1.15
HTR TC IN HTR 36,15.6 IN	1136.4	0.6	1.06
HTR TC IN HTR 03,15.9 IN	1175.7	0.5	1.34
HTR TC IN HTR 06,15.9 IN	1228.2	0.7	1.71
HTR TC IN HTR 15,15.9 IN	1160.8	0.4	1.23
HTR TC IN HTR 24,15.9 IN	1162.3	0.4	1.25
HTR TC IN HTR 33,15.9 IN	1147.0	0.3	1.14

Test 11, run 152 (continued)

INSTRUMENT	20-SEC AVG	STD DEV	NORMALIZED TEMP
HTR TC IN HTR 34,15.9 IN	1144.1	0.5	1.12
HTR TC IN HTR 36,15.9 IN	1133.8	0.4	1.05
HTR TC IN HTR 04,16.1 IN	1194.8	0.5	1.47
HTR TC IN HTR 05,16.1 IN	1192.9	0.6	1.46
HTR TC IN HTR 07,16.1 IN	1194.5	0.2	1.47
HTR TC IN HTR 21,16.1 IN	1149.4	0.5	1.15
HTR TC IN HTR 27,16.1 IN	1161.9	0.4	1.24
HTR TC IN HTR 04,16.4 IN	1198.1	0.4	1.50
HTR TC IN HTR 05,16.4 IN	1195.3	0.3	1.48
HTR TC IN HTR 07,16.4 IN	1195.1	0.4	1.48
HTR TC IN HTR 21,16.4 IN	1153.3	1.2	1.18
HTR TC IN HTR 27,16.4 IN	1165.6	0.4	1.27
HTR TC IN HTR 04,16.6 IN	1194.7	0.4	1.47
HTR TC IN HTR 05,16.6 IN	1195.7	0.5	1.48
HTR TC IN HTR 07,16.6 IN	1190.0	0.5	1.44
HTR TC IN HTR 21,16.6 IN	1154.0	0.6	1.19
HTR TC IN HTR 27,16.6 IN	1163.9	0.3	1.26
HTR TC IN HTR 04,16.9 IN	1193.0	0.7	1.46
HTR TC IN HTR 07,16.9 IN	1188.6	0.1	1.43
HTR TC IN HTR 21,16.9 IN	1153.1	0.3	1.18
HTR TC IN HTR 27,16.9 IN	1159.7	0.3	1.23
HTR TC IN HTR 11,18AB IN	1188.9	0.4	1.43
HTR TC IN HTR 12,18AB IN	1181.2	0.3	1.38
HTR TC IN HTR 14,18AB IN	1155.4	0.4	1.20
HTR TC IN HTR 30,18AB IN	1184.6	0.3	1.40
HTR TC IN HTR 11,18BC IN	1189.0	0.6	1.43
HTR TC IN HTR 12,18BC IN	1180.5	0.5	1.37
HTR TC IN HTR 14,18BC IN	1158.2	0.4	1.22
HTR TC IN HTR 17,18BC IN	1186.0	0.3	1.41
HTR TC IN HTR 30,18BC IN	1174.0	0.8	1.33
WIRE WRAP THERMOCOUPLES			
WW TC ON HTR 12,-1 IN(DEG F)	989.1	0.4	0.03
WW TC ON HTR 16,-1 IN	988.6	0.3	0.03
WW TC ON HTR 12,01 IN	1001.7	17.4	0.12
WW TC ON HTR 16,09 IN	1070.8	0.5	0.60
WW TC ON HTR 04,11 IN	1089.4	0.4	0.73
WW TC ON HTR 05,11 IN	1079.6	0.4	0.67
WW TC ON HTR 13,11 IN	1085.1	0.3	0.70
WW TC ON HTR 17,11 IN	1081.0	0.3	0.68
WW TC ON HTR 28,11 IN	1072.9	0.3	0.62
WW TC ON HTR 31,11 IN	1075.9	0.4	0.64
WW TC ON HTR 03,13 IN	1091.2	0.5	0.75
WW TC ON HTR 11,13 IN	1099.9	0.6	0.81
WW TC ON HTR 13,13 IN	1096.6	0.4	0.78
WW TC ON HTR 15,13 IN	1098.9	0.5	0.80
WW TC ON HTR 17,13 IN	1098.2	0.4	0.80
WW TC ON HTR 22,13 IN	1084.3	0.3	0.70
WW TC ON HTR 01,15 IN	1120.5	0.5	0.95
WW TC ON HTR 03,15 IN	1112.9	0.4	0.90

Test 11, run 152 (continued)

INSTRUMENT	20-SEC AVG	STD DEV	NORMALIZED TEMP
WW TC ON HTR 08,15 IN	1107.4	0.4	0.86
WW TC ON HTR 10,15 IN	1108.8	0.4	0.87
WW TC ON HTR 15,15 IN	1111.6	0.4	0.89
WW TC ON HTR 19,15 IN	1110.9	0.4	0.88
WW TC ON HTR 25,15 IN	1073.9	0.4	0.63
WW TC ON HTR 36,15 IN	1062.7	0.3	0.55
WW TC ON HTR 01,17 IN	1141.1	0.5	1.10
WW TC AJ HTR 02,17 IN	1127.9	0.5	1.00
WW TC OP HTR 02,17 IN	1131.5	0.4	1.03
WW TC ON HTR 08,17 IN	1116.2	0.4	0.92
WW TC ON HTR 10,17 IN	1115.0	0.5	0.91
WW TC ON HTR 11,17 IN	1111.2	0.5	0.89
WW TC ON HTR 18,17 IN	1122.4	0.2	0.97
WW TC ON HTR 19,17 IN	1122.5	0.4	0.97
WW TC ON HTR 21,17 IN	1105.8	0.4	0.85
WW TC ON HTR 22,17 IN	1122.4	0.4	0.97
WW TC ON HTR 33,17 IN	1078.4	0.5	0.66
WW TC ON HTR 37,17 IN	1097.7	0.3	0.79
WW TC ON HTR 06,19 IN	1165.2	0.4	1.27
WW TC AJ HTR 07,19 IN	1139.4	1.0	1.08
WW TC OP HTR 07,19 IN	1146.2	0.4	1.13
WW TC ON HTR 09,19 IN	1136.9	0.5	1.07
WW TC ON HTR 14,19 IN	1121.4	0.4	0.96
WW TC ON HTR 18,19 IN	1136.5	0.5	1.06
WW TC ON HTR 27,19 IN	1086.6	0.4	0.71
WW TC ON HTR 30,19 IN	1092.7	0.3	0.76
WW TC ON HTR 34,19 IN	1120.4	0.4	0.95
WW TC ON HTR 36,19 IN	1114.7	0.4	0.91
WW TC ON HTR 37,19 IN	1096.0	0.3	0.78
WW TC ON HTR 05,21 IN	1171.8	0.4	1.31
WW TC ON HTR 06,21 IN	1174.5	0.3	1.33
WW TC ON HTR 21,21 IN	1115.0	0.3	0.91
WW TC ON HTR 24,21 IN	1101.5	0.4	0.82
WW TC ON HTR 25,21 IN	1091.5	1.8	0.75
WW TC ON HTR 27,21 IN	1112.4	0.3	0.90
WW TC ON HTR 30,21 IN	1129.8	0.3	1.02
WW TC ON HTR 33,21 IN	1134.8	0.2	1.05
WW TC ON HTR 34,21 IN	1114.4	0.4	0.91
WW TC ON HTR 04,23 IN	1167.0	0.5	1.28
WW TC ON HTR 09,23 IN	1135.2	0.4	1.06
WW TC ON HTR 14,23 IN	1139.6	0.4	1.09
WW TC ON HTR 24,23 IN	1103.3	0.2	0.83
WW TC ON HTR 28,23 IN	1120.0	0.3	0.95
WW TC ON HTR 31,23 IN	1104.9	0.3	0.84
WW TC ON ROD 01,25 IN	1163.5	0.4	1.25
WW TC ON ROD 02,25 IN	1134.3	0.4	1.05
WW TC ON ROD 05,25 IN	1146.2	0.6	1.13
WW TC ON ROD 08,25 IN	1104.0	0.4	0.84
WW TC ON ROD 14,25 IN	1118.6	0.4	0.94
WW TC ON ROD 04,27 IN	1140.8	0.4	1.09
WW TC ON ROD 07,27 IN	1152.2	0.2	1.17

Test 11, run 152 (continued)

INSTRUMENT	20-SEC AVG	STD DEV	NORMALIZED TEMP
WW TC ON ROD 12,27 IN	1113.7	0.5	0.90
WW TC ON ROD 16,27 IN	1100.0	0.2	0.81
WW TC ON ROD 18,27 IN	1113.9	0.3	0.91
WW TC ON ROD 03,29 IN	1154.0	0.4	1.19
WW TC ON ROD 06,29 IN	1145.7	0.3	1.13
WW TC ON ROD 10,29 IN	1116.1	0.5	0.92
WW TC ON ROD 01,37 IN	1151.2	0.3	1.17
WW TC ON ROD 02,37 IN	1122.4	0.1	0.97
WW TC ON ROD 08,37 IN	1113.1	0.4	0.90
WW TC ON ROD 14,37 IN	1134.7	0.3	1.05
WW TC ON ROD 04,51 IN	1135.6	0.0	1.06
WW TC ON ROD 07,51 IN	1136.3	0.5	1.06
WW TC ON ROD 12,51 IN	1119.6	0.4	0.95
WW TC ON ROD 16,51 IN	1121.9	0.4	0.96
WW TC ON ROD 18,51 IN	1116.6	0.2	0.92
WW TC ON ROD 03,63 IN	1138.5	0.4	1.08
WW TC ON ROD 06,63 IN	1129.1	0.3	1.01
WW TC ON ROD 10,63 IN	1128.5	0.4	1.01
DUCT THERMOCOUPLES			
DUCT WALL TC,CH 38,19 IN(DEG F)	1072.0	0.2	0.61
DUCT WALL TC,CH 53,19 IN	1073.7	0.3	0.62
DUCT WALL TC,CH 28,21 IN	1091.5	0.4	0.75
DUCT WALL TC,CH 43,21 IN	1094.3	0.2	0.77
DUCT WALL TC,CH 44,21 IN	1091.5	0.4	0.75
TEST SECTION HOUSING THERMOCOUPLES			
TS SHELL-BOT(DEG F)	990.8	2.5	
TS GUARD HTR-BOT	920.5	0.7	
TS HTR-BOT	841.0	0.5	
TS SHELL-LOW CTR	1078.4	0.3	
TS GUARD HTR-LOW CTR	1046.3	0.3	
TS HTR-LOW CTR	933.3	0.7	
TS SHELL-UP CTR	1118.2	0.4	
TS GUARD HTR-UP CTR	1053.0	0.2	
TS HTR-UP CTR	977.0	0.3	
TS SHELL-TOP	1126.3	0.6	
TS GUARD HTR-TOP	1071.3	0.4	
TS HTR-TOP	1002.6	0.3	
REFERENCE BOX THERMOCOUPLES			
150 DEG REF BOX 1(DEG F)	150.5	0.4	
150 DEG REF BOX 2	151.3	0.3	
150 DEG REF BOX 3	154.5	0.3	
150 DEG REF BOX 4	152.4	0.4	
150 DEG REF BOX 5	151.3	0.2	
MISCELLANEOUS			
SOD PUMP SPEED(RPM)	2764.7	36.4	
EXPANSION TANK LEVEL(% FULL)	75.3	0.1	

TEST SERIES 1C(BUNDLE 3C); TEST 11 RUN 153 03/08/78 10 52 21

CONDITIONS:

TEST SECTION FLOW: 4.55 L/S (71.9 GPM)

TEST SECTION POWER

19 CENTRAL HEATERS: 248.4 KW (24.5 KW/M/ROD) (7.5 KW/FT/ROD)

12 EDGE HEATERS: 155.3 KW (24.3 KW/M/ROD) (7.4 KW/FT/ROD)

TOTAL(31 HEATERS): 403.7 KW

TEST SECTION INLET TEMPERATURE: 551 DEG C (1025 DEG F)

TEST SECTION OUTLET TEMPERATURE: 634 DEG C (1173 DEG F)

HEAT BALANCE:

HEAT INPUT FROM 31 FUEL PIN SIMULATORS: 403.7 KW

HEAT ABSORBED BY SODIUM=

FLOW X SP.HEAT X (TS OUT TEMP - TS IN TEMP) 387.5 KW

% OF INPUT HEAT ACCOUNTED FOR: 96.0 %

INSTRUMENT	20-SEC AVG	STD DEV
HEATER POWER-CENTRAL RODS(KW)		
HTR POWER IN ROD 1	13.1	0.0
HTR POWER IN RODS 8,9,10	39.3	0.0
HTR POWER IN RODS 14,15,16	39.5	0.0
HTR POWER IN RODS 2,3,11,19	52.3	0.0
HTR POWER IN RODS 5,6,13,17	52.1	0.0
HTR POWER IN RODS 4,7,12,18	52.2	0.0
HEATER POWER-EDGE RODS(KW)		
HTR POWER IN RODS 30,31	25.4	0.0
HTR POWER IN RODS 24,25,27,28	51.5	0.0
HTR POWER IN RODS 33,34	26.0	0.0
HTR POWER IN RODS 21,22,36,37	52.4	0.0
FLOWS		
TEST SECTION(TS) FLOW IN(GPM)	71.9	0.1
TS FLOW OUT(GPM)	72.9	0.2
TS BYPASS FLOW(GPM)	-0.3	0.2
LOOP FLOW TOTAL(GPM)	71.6	0.4
RADIATOR AIR FLOW(CFM)	16.7	0.7
PRESSURES		
TS IN PRESS(PSIG)	88.4	0.1
TS OUT PRESS(PSIG)	8.1	0.1
PUMP OUT PRESS(PSIG)	85.4	0.1
TS LINE PRESS IN(PSIG)	89.3	0.1
EXP TANK ARGON PRESS(PSIG)	4.8	0.1
TS BYP LINE PRESS IN(PSIG)	90.2	0.1
TS BYP LINE PRESS OUT(PSIG)	8.9	0.1

Test 11, run 153 (continued)

INSTRUMENT	20-SEC AVG	STD DEV	NORMALIZED TEMP
LOOP THERMOCOUPLES			
TEST SECT INLET WELL(DEG F)	1025.4	0.5	
TEST SECT OUTLET WELL(DEG F)	1173.8	0.4	
PUMP IN PIPE WALL TC	1018.0	6.3	
PUMP OUT PIPE WALL TC	1017.7	0.5	
RAD IN PIPE WALL TC	1088.5	6.0	
RAD OUT PIPE WALL TC	1019.5	1.7	
HEATER INTERNAL THERMOCOUPLES			
HTR TC IN HTR 08,12AB IN(DEG F)	1183.3	0.6	1.06
HTR TC IN HTR 13,12AB IN	1174.2	0.4	1.00
HTR TC IN HTR 18,12AB IN	1186.8	1.1	1.09
HTR TC IN HTR 22,12AB IN	1177.9	0.3	1.03
HTR TC IN HTR 08,12BC IN	1176.0	0.5	1.01
HTR TC IN HTR 13,12BC IN	1175.8	0.5	1.01
HTR TC IN HTR 18,12BC IN	1188.4	0.4	1.10
HTR TC IN HTR 22,12BC IN	1174.7	0.3	1.01
HTR TC IN HTR 09,15AB IN	1212.9	0.5	1.26
HTR TC IN HTR 10,15AB IN	1204.9	0.5	1.21
HTR TC IN HTR 16,15BC IN	1199.0	0.5	1.17
HTR TC IN HTR 25,15BC IN	1192.5	0.4	1.13
HTR TC IN HTR 02,15.1 IN	1234.1	0.6	1.41
HTR TC IN HTR 03,15.1 IN	1240.8	0.6	1.45
HTR TC IN HTR 06,15.1 IN	1244.1	0.5	1.47
HTR TC IN HTR 15,15.1 IN	1225.7	0.5	1.35
HTR TC IN HTR 24,15.1 IN	1201.2	0.4	1.18
HTR TC IN HTR 33,15.1 IN	1203.1	0.4	1.20
HTR TC IN HTR 36,15.1 IN	1198.0	0.4	1.16
HTR TC IN HTR 02,15.4 IN	1251.1	0.4	1.52
HTR TC IN HTR 03,15.4 IN	1253.2	0.7	1.54
HTR TC IN HTR 06,15.4 IN	1247.5	0.4	1.50
HTR TC IN HTR 15,15.4 IN	1214.2	0.6	1.27
HTR TC IN HTR 24,15.4 IN	1217.1	0.4	1.29
HTR TC IN HTR 33,15.4 IN	1204.9	0.4	1.21
HTR TC IN HTR 34,15.4 IN	1195.4	1.2	1.15
HTR TC IN HTR 36,15.4 IN	1197.2	0.5	1.16
HTR TC IN HTR 02,15.6 IN	1250.3	0.7	1.52
HTR TC IN HTR 03,15.6 IN	1249.6	0.6	1.51
HTR TC IN HTR 06,15.6 IN	1259.7	0.4	1.58
HTR TC IN HTR 15,15.6 IN	1210.5	0.4	1.25
HTR TC IN HTR 24,15.6 IN	1214.2	0.5	1.27
HTR TC IN HTR 33,15.6 IN	1202.0	0.1	1.19
HTR TC IN HTR 34,15.6 IN	1201.2	0.7	1.18
HTR TC IN HTR 36,15.6 IN	1188.8	0.3	1.10
HTR TC IN HTR 03,15.9 IN	1217.0	0.5	1.29
HTR TC IN HTR 06,15.9 IN	1284.5	0.5	1.75
HTR TC IN HTR 15,15.9 IN	1203.1	0.6	1.20
HTR TC IN HTR 24,15.9 IN	1216.3	0.5	1.29
HTR TC IN HTR 33,15.9 IN	1198.2	0.4	1.16

Test 11, run 153 (continued)

INSTRUMENT	20-SEC AVG	STD DEV	NORMALIZED TEMP
HTR TC IN HTR 34,15.9 IN	1195.5	0.4	1.15
HTR TC IN HTR 36,15.9 IN	1186.4	0.4	1.09
HTR TC IN HTR 04,16.1 IN	1235.8	0.6	1.42
HTR TC IN HTR 05,16.1 IN	1236.4	0.6	1.42
HTR TC IN HTR 07,16.1 IN	1236.9	0.4	1.43
HTR TC IN HTR 21,16.1 IN	1204.5	0.5	1.21
HTR TC IN HTR 27,16.1 IN	1212.8	0.3	1.26
HTR TC IN HTR 04,16.4 IN	1239.5	1.2	1.44
HTR TC IN HTR 05,16.4 IN	1239.4	0.3	1.44
HTR TC IN HTR 07,16.4 IN	1237.4	0.4	1.43
HTR TC IN HTR 21,16.4 IN	1207.8	0.8	1.23
HTR TC IN HTR 27,16.4 IN	1217.2	0.4	1.29
HTR TC IN HTR 04,16.6 IN	1236.8	0.3	1.43
HTR TC IN HTR 05,16.6 IN	1240.7	0.4	1.45
HTR TC IN HTR 07,16.6 IN	1232.0	0.4	1.39
HTR TC IN HTR 21,16.6 IN	1207.3	0.5	1.23
HTR TC IN HTR 27,16.6 IN	1214.8	0.4	1.28
HTR TC IN HTR 04,16.9 IN	1235.2	0.4	1.41
HTR TC IN HTR 07,16.9 IN	1230.4	0.4	1.38
HTR TC IN HTR 21,16.9 IN	1206.1	0.3	1.22
HTR TC IN HTR 27,16.9 IN	1210.2	0.3	1.25
HTR TC IN HTR 11,18AB IN	1234.0	0.6	1.41
HTR TC IN HTR 12,18AB IN	1224.7	0.6	1.34
HTR TC IN HTR 14,18AB IN	1200.5	0.5	1.18
HTR TC IN HTR 30,18AB IN	1238.3	0.4	1.43
HTR TC IN HTR 11,18BC IN	1233.3	0.6	1.40
HTR TC IN HTR 12,18BC IN	1223.8	0.4	1.34
HTR TC IN HTR 14,18BC IN	1203.4	0.6	1.20
HTR TC IN HTR 17,18BC IN	1228.8	0.3	1.37
HTR TC IN HTR 30,18BC IN	1225.1	0.5	1.35
WIRE WRAP THERMOCOUPLES			
WW TC ON HTR 12,-1 IN(DEG F)	1029.1	0.4	0.03
WW TC ON HTR 16,-1 IN	1028.9	0.4	0.02
WW TC ON HTR 12,01 IN	1040.8	0.4	0.10
WW TC ON HTR 16,09 IN	1110.7	0.5	0.57
WW TC ON HTR 04,11 IN	1131.0	0.8	0.71
WW TC ON HTR 05,11 IN	1120.2	0.4	0.64
WW TC ON HTR 13,11 IN	1126.5	0.2	0.68
WW TC ON HTR 17,11 IN	1123.0	0.4	0.66
WW TC ON HTR 28,11 IN	1115.6	0.4	0.61
WW TC ON HTR 31,11 IN	1122.2	0.3	0.65
WW TC ON HTR 03,13 IN	1129.0	0.4	0.70
WW TC ON HTR 11,13 IN	1142.3	0.6	0.79
WW TC ON HTR 13,13 IN	1139.5	0.4	0.77
WW TC ON HTR 15,13 IN	1142.1	0.4	0.79
WW TC ON HTR 17,13 IN	1141.5	0.4	0.78
WW TC ON HTR 22,13 IN	1132.2	0.6	0.72
WW TC ON HTR 01,15 IN	1161.8	0.4	0.92
WW TC ON HTR 03,15 IN	1156.7	0.4	0.88

Test 11, run 153 (continued)

INSTRUMENT	20-SEC AVG	STD DEV	NORMALIZED TEMP
WW TC ON HTR 08,15 IN	1150.7	0.4	0.84
WW TC ON HTR 10,15 IN	1150.2	0.5	0.84
WW TC ON HTR 15,15 IN	1155.6	0.4	0.88
WW TC ON HTR 19,15 IN	1152.3	0.3	0.86
WW TC ON HTR 25,15 IN	1121.5	0.3	0.65
WW TC ON HTR 36,15 IN	1109.0	0.3	0.56
WW TC ON HTR 01,17 IN	1182.6	0.5	1.06
WW TC AJ HTR 02,17 IN	1168.1	0.4	0.96
WW TC OP HTR 02,17 IN	1173.4	0.9	1.00
WW TC ON HTR 08,17 IN	1159.1	0.4	0.90
WW TC ON HTR 10,17 IN	1159.6	0.5	0.90
WW TC ON HTR 11,17 IN	1155.7	0.5	0.88
WW TC ON HTR 18,17 IN	1165.3	0.3	0.94
WW TC ON HTR 19,17 IN	1165.3	0.4	0.94
WW TC ON HTR 21,17 IN	1148.8	0.3	0.83
WW TC ON HTR 22,17 IN	1168.2	0.4	0.96
WW TC ON HTR 33,17 IN	1127.3	0.5	0.69
WW TC ON HTR 37,17 IN	1147.5	0.4	0.82
WW TC ON HTR 06,19 IN	1209.6	0.4	1.24
WW TC AJ HTR 07,19 IN	1182.9	0.6	1.06
WW TC OP HTR 07,19 IN	1188.4	0.4	1.10
WW TC ON HTR 09,19 IN	1181.4	0.4	1.05
WW TC ON HTR 14,19 IN	1166.0	0.4	0.95
WW TC ON HTR 18,19 IN	1178.6	1.1	1.03
WW TC ON HTR 27,19 IN	1132.6	0.4	0.72
WW TC ON HTR 30,19 IN	1141.0	0.4	0.78
WW TC ON HTR 34,19 IN	1168.9	0.4	0.97
WW TC ON HTR 36,19 IN	1165.9	0.4	0.95
WW TC ON HTR 37,19 IN	1145.3	0.4	0.81
WW TC ON HTR 05,21 IN	1215.0	0.4	1.28
WW TC ON HTR 06,21 IN	1217.4	0.5	1.29
WW TC ON HTR 21,21 IN	1163.2	0.5	0.93
WW TC ON HTR 24,21 IN	1148.9	0.2	0.83
WW TC ON HTR 25,21 IN	1138.6	0.9	0.76
WW TC ON HTR 27,21 IN	1160.4	0.4	0.91
WW TC ON HTR 30,21 IN	1177.1	0.4	1.02
WW TC ON HTR 33,21 IN	1185.0	0.5	1.08
WW TC ON HTR 34,21 IN	1165.4	0.3	0.94
WW TC ON HTR 04,23 IN	1209.6	0.5	1.24
WW TC ON HTR 09,23 IN	1181.4	0.4	1.05
WW TC ON HTR 14,23 IN	1184.6	0.4	1.07
WW TC ON HTR 24,23 IN	1151.4	0.3	0.85
WW TC ON HTR 28,23 IN	1167.9	0.3	0.96
WW TC ON HTR 31,23 IN	1152.8	0.4	0.86
WW TC ON ROD 01,25 IN	1206.7	0.4	1.22
WW TC ON ROD 02,25 IN	1179.5	0.3	1.04
WW TC ON ROD 05,25 IN	1190.6	0.4	1.11
WW TC ON ROD 08,25 IN	1151.3	0.2	0.85
WW TC ON ROD 14,25 IN	1166.9	0.4	0.95
WW TC ON ROD 04,27 IN	1186.2	0.2	1.08
WW TC ON ROD 07,27 IN	1194.6	0.3	1.14

Test 11, run 153 (continued)

INSTRUMENT	20-SEC AVG	STD DEV	NORMALIZED TEMP
WW TC ON ROD 12,27 IN	1160.6	0.4	0.91
WW TC ON ROD 16,27 IN	1148.4	0.4	0.83
WW TC ON ROD 18,27 IN	1162.1	0.1	0.92
WW TC ON ROD 03,29 IN	1197.6	0.4	1.16
WW TC ON ROD 06,29 IN	1190.4	0.3	1.11
WW TC ON ROD 10,29 IN	1163.4	0.5	0.93
WW TC ON ROD 01,37 IN	1195.3	0.3	1.14
WW TC ON ROD 02,37 IN	1169.4	0.4	0.97
WW TC ON ROD 08,37 IN	1161.3	0.2	0.92
WW TC ON ROD 14,37 IN	1180.8	0.4	1.05
WW TC ON ROD 04,51 IN	1181.6	0.4	1.05
WW TC ON ROD 07,51 IN	1182.5	0.4	1.06
WW TC ON ROD 12,51 IN	1166.3	0.2	0.95
WW TC ON ROD 16,51 IN	1168.7	0.2	0.97
WW TC ON ROD 18,51 IN	1163.7	0.2	0.93
WW TC ON ROD 03,63 IN	1183.1	0.4	1.06
WW TC ON ROD 06,63 IN	1175.4	0.2	1.01
WW TC ON ROD 10,63 IN	1174.7	0.3	1.01
DUCT THERMOCOUPLES			
DUCT WALL TC,CH 38,19 IN(DEG F)	1118.3	1.4	0.63
DUCT WALL TC,CH 53,19 IN	1122.3	0.2	0.65
DUCT WALL TC,CH 28,21 IN	1138.9	0.2	0.76
DUCT WALL TC,CH 43,21 IN	1141.8	0.4	0.78
DUCT WALL TC,CH 44,21 IN	1138.7	0.4	0.76
TEST SECTION HOUSING THERMOCOUPLES			
TS SHELL-BOT(DEG F)	1030.9	2.4	
TS GUARD HTR-BOT	955.9	0.7	
TS HTR-BOT	872.3	0.6	
TS SHELL-LOW CTR	1122.8	0.5	
TS GUARD HTR-LOW CTR	1088.2	0.4	
TS HTR-LOW CTR	968.9	0.4	
TS SHELL-UP CTR	1165.5	0.4	
TS GUARD HTR-UP CTR	1096.0	0.3	
TS HTR-UP CTR	1017.4	0.4	
TS SHELL-TOP	1172.2	0.4	
TS GUARD HTR-TOP	1116.7	0.5	
TS HTR-TOP	1043.5	0.5	
REFERENCE BOX THERMOCOUPLES			
150 DEG REF BOX 1(DEG F)	150.5	0.3	
150 DEG REF BOX 2	152.2	0.3	
150 DEG REF BOX 3	154.0	0.4	
150 DEG REF BOX 4	152.7	0.4	
150 DEG REF BOX 5	150.6	0.4	
MISCELLANEOUS			
SOD PUMP SPEED(RPM)	2752.2	27.8	
EXPANSION TANK LEVEL(% FULL)	74.2	0.1	

TEST SERIES 10(BUNDLE 3C); TEST 11 RUN 154 03/07/78 14 41 59

CONDITIONS:

TEST SECTION FLOW: 4.61 L/S (72.8 GPM)

TEST SECTION POWER

19 CENTRAL HEATERS:	250.3 KW	(24.7 KW/M/ROD)	(7.5 KW/FT/ROD)
12 EDGE HEATERS:	176.1 KW	(27.5 KW/M/ROD)	(8.4 KW/FT/ROD)
TOTAL(31 HEATERS):	426.4 KW		

TEST SECTION INLET TEMPERATURE: 568 DEG C (1055 DEG F)

TEST SECTION OUTLET TEMPERATURE: 654 DEG C (1210 DEG F)

HEAT BALANCE:

HEAT INPUT FROM 31 FUEL PIN SIMULATORS: 426.4 KW

HEAT ABSORBED BY SODIUM=

FLOW X SP.HEAT X (TS OUT TEMP - TS IN TEMP) 407.1 KW

% OF INPUT HEAT ACCOUNTED FOR: 95.5 %

INSTRUMENT	20-SEC AVG	STD DEV
HEATER POWER-CENTRAL RODS(KW)		
HTR POWER IN ROD 1	13.1	0.0
HTR POWER IN RODS 8,9,10	39.3	0.0
HTR POWER IN RODS 14,15,16	39.5	0.0
HTR POWER IN RODS 2,3,11,19	52.6	0.0
HTR POWER IN RODS 5,6,13,17	52.8	0.0
HTR POWER IN RODS 4,7,12,18	52.8	0.0
HEATER POWER-EDGE RODS(KW)		
HTR POWER IN RODS 30,31	29.1	0.0
HTR POWER IN RODS 24,25,27,28	58.8	0.0
HTR POWER IN RODS 33,34	29.3	0.0
HTR POWER IN RODS 21,22,36,37	58.9	0.0
FLOWS		
TEST SECTION(TS) FLOW IN(GPM)	72.8	0.1
TS FLOW OUT(GPM)	73.9	0.2
TS BYPASS FLOW(GPM)	0.7	0.1
LOOP FLOW TOTAL(GPM)	72.5	0.4
RADIATOR AIR FLOW(CFM)	16.3	0.7
PRESSURES		
TS IN PRESS(PSIG)	88.4	0.1
TS OUT PRESS(PSIG)	8.4	0.1
PUMP OUT PRESS(PSIG)	85.8	0.1
TS LINE PRESS IN(PSIG)	89.5	0.1
EXP TANK ARGON PRESS(PSIG)	5.3	0.1
TS BYP LINE PRESS IN(PSIG)	90.6	0.1
TS BYP LINE PRESS OUT(PSIG)	9.0	0.1

Test 11, run 154 (continued)

INSTRUMENT	20-SEC AVG	STD DEV	NORMALIZED TEMP
LOOP THERMOCOUPLES			
TEST SECT INLET WELL(DEG F)	1055.5	0.5	
TEST SECT OUTLET WELL(DEG F)	1210.0	0.5	
PUMP IN PIPE WALL TC	1049.6	4.5	
PUMP OUT PIPE WALL TC	1048.8	0.3	
RAD IN PIPE WALL TC	1123.0	10.4	
RAD OUT PIPE WALL TC	1050.8	1.9	
HEATER INTERNAL THERMOCOUPLES			
HTR TC IN HTR 08,12AB IN(DEG F)	1215.1	0.5	1.03
HTR TC IN HTR 13,12AB IN	1209.7	0.4	1.00
HTR TC IN HTR 18,12AB IN	1220.9	0.6	1.07
HTR TC IN HTR 22,12AB IN	1219.8	0.6	1.06
HTR TC IN HTR 08,12BC IN	1208.6	0.3	0.99
HTR TC IN HTR 13,12BC IN	1211.6	0.7	1.01
HTR TC IN HTR 18,12BC IN	1221.4	0.5	1.07
HTR TC IN HTR 22,12BC IN	1215.5	0.4	1.04
HTR TC IN HTR 09,15AB IN	1244.9	0.5	1.23
HTR TC IN HTR 10,15AB IN	1234.4	0.3	1.16
HTR TC IN HTR 16,15BC IN	1232.2	0.5	1.14
HTR TC IN HTR 25,15BC IN	1238.2	0.4	1.18
HTR TC IN HTR 02,15.1 IN	1258.0	0.5	1.31
HTR TC IN HTR 03,15.1 IN	1262.3	0.5	1.34
HTR TC IN HTR 06,15.1 IN	1270.1	0.7	1.39
HTR TC IN HTR 15,15.1 IN	1253.2	0.4	1.28
HTR TC IN HTR 24,15.1 IN	1247.0	0.3	1.24
HTR TC IN HTR 33,15.1 IN	1246.8	0.3	1.24
HTR TC IN HTR 36,15.1 IN	1247.0	0.4	1.24
HTR TC IN HTR 02,15.4 IN	1268.3	0.5	1.38
HTR TC IN HTR 03,15.4 IN	1261.0	0.5	1.33
HTR TC IN HTR 06,15.4 IN	1274.6	0.5	1.42
HTR TC IN HTR 15,15.4 IN	1240.3	0.4	1.20
HTR TC IN HTR 24,15.4 IN	1266.3	0.5	1.36
HTR TC IN HTR 33,15.4 IN	1249.0	0.4	1.25
HTR TC IN HTR 34,15.4 IN	1238.6	1.5	1.18
HTR TC IN HTR 36,15.4 IN	1244.3	0.6	1.22
HTR TC IN HTR 02,15.6 IN	1267.8	0.3	1.37
HTR TC IN HTR 03,15.6 IN	1255.3	0.2	1.29
HTR TC IN HTR 06,15.6 IN	1286.2	0.6	1.49
HTR TC IN HTR 15,15.6 IN	1236.3	0.4	1.17
HTR TC IN HTR 24,15.6 IN	1264.6	0.4	1.35
HTR TC IN HTR 33,15.6 IN	1245.7	0.4	1.23
HTR TC IN HTR 34,15.6 IN	1242.2	0.7	1.21
HTR TC IN HTR 36,15.6 IN	1236.2	0.3	1.17
HTR TC IN HTR 03,15.9 IN	1245.4	0.4	1.23
HTR TC IN HTR 06,15.9 IN	1289.0	0.5	1.51
HTR TC IN HTR 15,15.9 IN	1232.3	0.4	1.14
HTR TC IN HTR 24,15.9 IN	1267.3	0.4	1.37
HTR TC IN HTR 33,15.9 IN	1241.9	0.1	1.21

Test 11, run 154 (continued)

INSTRUMENT	20-SEC AVG	STD DEV	NORMALIZED TEMP
HTR TC IN HTR 34,15.9 IN	1237.6	0.5	1.18
HTR TC IN HTR 36,15.9 IN	1233.4	0.4	1.15
HTR TC IN HTR 04,16.1 IN	1264.0	0.6	1.35
HTR TC IN HTR 05,16.1 IN	1262.9	0.4	1.34
HTR TC IN HTR 07,16.1 IN	1266.5	0.4	1.37
HTR TC IN HTR 21,16.1 IN	1249.5	0.3	1.25
HTR TC IN HTR 27,16.1 IN	1261.2	0.3	1.33
HTR TC IN HTR 04,16.4 IN	1267.1	0.4	1.37
HTR TC IN HTR 05,16.4 IN	1265.1	0.4	1.36
HTR TC IN HTR 07,16.4 IN	1266.0	0.7	1.36
HTR TC IN HTR 21,16.4 IN	1253.2	0.6	1.28
HTR TC IN HTR 27,16.4 IN	1266.0	0.3	1.36
HTR TC IN HTR 04,16.6 IN	1267.1	0.5	1.37
HTR TC IN HTR 05,16.6 IN	1267.4	0.5	1.37
HTR TC IN HTR 07,16.6 IN	1259.1	0.4	1.32
HTR TC IN HTR 21,16.6 IN	1255.8	0.5	1.30
HTR TC IN HTR 27,16.6 IN	1262.9	0.3	1.34
HTR TC IN HTR 04,16.9 IN	1228.7	0.5	1.12
HTR TC IN HTR 07,16.9 IN	1257.6	0.4	1.31
HTR TC IN HTR 21,16.9 IN	1256.1	0.6	1.30
HTR TC IN HTR 27,16.9 IN	1257.8	0.8	1.31
HTR TC IN HTR 11,18AB IN	1260.9	0.5	1.33
HTR TC IN HTR 12,18AB IN	1257.8	0.6	1.31
HTR TC IN HTR 14,18AB IN	1233.3	0.5	1.15
HTR TC IN HTR 30,18AB IN	1285.9	0.4	1.49
HTR TC IN HTR 11,18BC IN	1260.0	0.5	1.32
HTR TC IN HTR 12,18BC IN	1256.9	0.5	1.30
HTR TC IN HTR 14,18BC IN	1236.7	0.4	1.17
HTR TC IN HTR 17,18BC IN	1273.2	0.4	1.41
HTR TC IN HTR 30,18BC IN	1271.1	1.0	1.39
WIRE WRAP THERMOCOUPLES			
WW TC ON HTR 12,-1 IN(DEG F)	1059.4	0.5	0.03
WW TC ON HTR 16,-1 IN	1058.4	0.4	0.02
WW TC ON HTR 12,01 IN	1072.2	14.2	0.11
WW TC ON HTR 16,09 IN	1141.6	0.4	0.56
WW TC ON HTR 04,11 IN	1161.5	0.5	0.69
WW TC ON HTR 05,11 IN	1150.8	0.4	0.62
WW TC ON HTR 13,11 IN	1156.5	0.5	0.65
WW TC ON HTR 17,11 IN	1156.1	0.3	0.65
WW TC ON HTR 28,11 IN	1148.3	0.4	0.60
WW TC ON HTR 31,11 IN	1159.3	0.4	0.67
WW TC ON HTR 03,13 IN	1158.6	0.3	0.67
WW TC ON HTR 11,13 IN	1174.5	0.3	0.77
WW TC ON HTR 13,13 IN	1171.3	0.4	0.75
WW TC ON HTR 15,13 IN	1172.1	0.4	0.75
WW TC ON HTR 17,13 IN	1174.6	0.4	0.77
WW TC ON HTR 22,13 IN	1172.0	0.5	0.75
WW TC ON HTR 01,15 IN	1188.0	0.4	0.86
WW TC ON HTR 03,15 IN	1184.4	0.6	0.83

Test 11, run 154 (continued)

INSTRUMENT	20-SEC AVG	STD DEV	NORMALIZED TEMP
WW TC ON HTR 08,15 IN	1184.5	0.3	0.83
WW TC ON HTR 10,15 IN	1183.2	0.4	0.83
WW TC ON HTR 15,15 IN	1188.9	0.5	0.86
WW TC ON HTR 19,15 IN	1184.2	0.4	0.83
WW TC ON HTR 25,15 IN	1161.3	0.2	0.68
WW TC ON HTR 36,15 IN	1150.6	0.3	0.62
WW TC ON HTR 01,17 IN	1208.1	0.5	0.99
WW TC AJ HTR 02,17 IN	1197.5	0.4	0.92
WW TC OP HTR 02,17 IN	1201.1	0.3	0.94
WW TC ON HTR 08,17 IN	1192.4	0.4	0.89
WW TC ON HTR 10,17 IN	1192.3	0.4	0.89
WW TC ON HTR 11,17 IN	1188.7	0.2	0.86
WW TC ON HTR 18,17 IN	1198.6	0.4	0.93
WW TC ON HTR 19,17 IN	1196.9	0.3	0.92
WW TC ON HTR 21,17 IN	1206.9	0.5	0.98
WW TC ON HTR 22,17 IN	1202.3	0.5	0.95
WW TC ON HTR 33,17 IN	1166.3	0.5	0.72
WW TC ON HTR 37,17 IN	1187.1	0.4	0.85
WW TC ON HTR 06,19 IN	1236.3	0.5	1.17
WW TC AJ HTR 07,19 IN	1216.2	0.6	1.04
WW TC OP HTR 07,19 IN	1217.0	0.4	1.04
WW TC ON HTR 09,19 IN	1212.1	0.5	1.01
WW TC ON HTR 14,19 IN	1201.1	0.3	0.94
WW TC ON HTR 18,19 IN	1210.2	0.4	1.00
WW TC ON HTR 27,19 IN	1173.4	0.4	0.76
WW TC ON HTR 30,19 IN	1182.8	0.3	0.82
WW TC ON HTR 34,19 IN	1208.8	0.4	0.99
WW TC ON HTR 36,19 IN	1206.3	0.4	0.98
WW TC ON HTR 37,19 IN	1183.2	0.4	0.83
WW TC ON HTR 05,21 IN	1243.1	0.7	1.21
WW TC ON HTR 06,21 IN	1244.4	0.5	1.22
WW TC ON HTR 21,21 IN	1202.6	0.6	0.95
WW TC ON HTR 24,21 IN	1193.0	0.4	0.89
WW TC ON HTR 25,21 IN	1177.9	0.3	0.79
WW TC ON HTR 27,21 IN	1201.9	0.3	0.95
WW TC ON HTR 30,21 IN	1216.8	0.4	1.04
WW TC ON HTR 33,21 IN	1225.9	0.4	1.10
WW TC ON HTR 34,21 IN	1207.1	0.3	0.98
WW TC ON HTR 04,23 IN	1236.2	0.4	1.17
WW TC ON HTR 09,23 IN	1221.3	0.4	1.07
WW TC ON HTR 14,23 IN	1217.3	0.5	1.05
WW TC ON HTR 24,23 IN	1194.0	0.4	0.90
WW TC ON HTR 28,23 IN	1207.8	0.3	0.99
WW TC ON HTR 31,23 IN	1191.9	0.3	0.88
WW TC ON ROD 01,25 IN	1233.8	0.5	1.15
WW TC ON ROD 02,25 IN	1213.8	0.4	1.02
WW TC ON ROD 05,25 IN	1222.1	0.4	1.08
WW TC ON ROD 08,25 IN	1188.6	0.3	0.86
WW TC ON ROD 14,25 IN	1203.8	0.4	0.96
WW TC ON ROD 04,27 IN	1220.7	0.4	1.07
WW TC ON ROD 07,27 IN	1225.1	0.5	1.10

Test 11, run 154 (continued)

INSTRUMENT	20-SEC AVG	STD DEV	NORMALIZED TEMP
WW TC ON ROD 12,27 IN	1197.7	0.4	0.92
WW TC ON ROD 16,27 IN	1187.6	0.4	0.86
WW TC ON ROD 18,27 IN	1201.2	0.3	0.94
WW TC ON ROD 03,29 IN	1226.2	0.4	1.10
WW TC ON ROD 06,29 IN	1222.8	0.2	1.08
WW TC ON ROD 10,29 IN	1201.8	0.3	0.95
WW TC ON ROD 01,37 IN	1225.6	0.4	1.10
WW TC ON ROD 02,37 IN	1204.8	0.4	0.97
WW TC ON ROD 08,37 IN	1197.7	0.3	0.92
WW TC ON ROD 14,37 IN	1212.5	0.4	1.02
WW TC ON ROD 04,51 IN	1215.3	0.1	1.03
WW TC ON ROD 07,51 IN	1216.6	0.5	1.04
WW TC ON ROD 12,51 IN	1202.4	0.5	0.95
WW TC ON ROD 16,51 IN	1206.1	0.2	0.97
WW TC ON ROD 18,51 IN	1202.1	0.3	0.95
WW TC ON ROD 03,63 IN	1217.2	0.4	1.05
WW TC ON ROD 06,63 IN	1211.8	0.3	1.01
WW TC ON ROD 10,63 IN	1209.5	0.3	1.00
DUCT THERMOCOUPLES			
DUCT WALL TC,CH 38,19 IN(DEG F)	1156.4	0.2	0.65
DUCT WALL TC,CH 53,19 IN	1160.6	0.3	0.68
DUCT WALL TC,CH 28,21 IN	1175.4	0.2	0.78
DUCT WALL TC,CH 43,21 IN	1182.0	0.3	0.82
DUCT WALL TC,CH 44,21 IN	1179.5	0.2	0.80
TEST SECTION HOUSING THERMOCOUPLES			
TS SHELL-BOT(DEG F)	1060.7	2.3	
TS GUARD HTR-BOT	976.3	1.0	
TS HTR-BOT	888.3	0.4	
TS SHELL-LOW CTR	1170.2	0.3	
TS GUARD HTR-LOW CTR	1125.7	0.2	
TS HTR-LOW CTR	996.8	0.5	
TS SHELL-UP CTR	1203.2	0.6	
TS GUARD HTR-UP CTR	1125.5	0.4	
TS HTR-UP CTR	1041.8	0.4	
TS SHELL-TOP	1208.3	0.5	
TS GUARD HTR-TOP	1147.5	1.2	
TS HTR-TOP	1067.7	0.3	
REFERENCE BOX THERMOCOUPLES			
150 DEG REF BOX 1(DEG F)	150.4	0.4	
150 DEG REF BOX 2	152.2	0.7	
150 DEG REF BOX 3	153.9	0.3	
150 DEG REF BOX 4	152.4	0.4	
150 DEG REF BOX 5	151.2	0.3	
MISCELLANEOUS			
SOD PUMP SPEED(RPM)	2765.1	36.2	
EXPANSION TANK LEVEL(% FULL)	70.9	0.1	

TEST SERIES 10(BUNDLE 3C); TEST 11 RUN 161 03/03/78 13 32 5

CONDITIONS:

TEST SECTION FLOW: 2.78 L/S (43.9 GPM)

TEST SECTION POWER

19 CENTRAL HEATERS:	249.9 KW	(24.7 KW/M/ROD)	(7.5 KW/FT/ROD)
12 EDGE HEATERS:	0.0 KW	(0.0 KW/M/ROD)	(0.0 KW/FT/ROD)
TOTAL(31 HEATERS):	249.9 KW		

TEST SECTION INLET TEMPERATURE: 442 DEG C (827 DEG F)

TEST SECTION OUTLET TEMPERATURE: 524 DEG C (976 DEG F)

HEAT BALANCE:

HEAT INPUT FROM 31 FUEL PIN SIMULATORS:	249.9 KW
HEAT ABSORBED BY SODIUM= FLOW X SP.HEAT X (TS OUT TEMP - TS IN TEMP)	246.0 KW
% OF INPUT HEAT ACCOUNTED FOR:	98.4 %

INSTRUMENT	20-SEC AVG	STD DEV
HEATER POWER-CENTRAL RODS(KW)		
HTR POWER IN ROD 1	13.0	0.0
HTR POWER IN RODS 8,9,10	39.7	0.0
HTR POWER IN RODS 14,15,16	39.6	0.0
HTR POWER IN RODS 2,3,11,19	52.3	0.0
HTR POWER IN RODS 5,6,13,17	52.8	0.0
HTR POWER IN RODS 4,7,12,18	52.4	0.0
HEATER POWER-EDGE RODS(KW)		
HTR POWER IN RODS 30,31	-0.0	0.0
HTR POWER IN RODS 24,25,27,28	-0.3	0.0
HTR POWER IN RODS 33,34	-0.0	0.0
HTR POWER IN RODS 21,22,36,37	0.0	0.0
FLOWS		
TEST SECTION(TS) FLOW IN(GPM)	43.9	0.1
TS FLOW OUT(GPM)	44.5	0.2
TS BYPASS FLOW(GPM)	1.9	0.1
LOOP FLOW TOTAL(GPM)	43.3	0.4
RADIATOR AIR FLOW(CFM)	6.8	0.4
PRESSURES		
TS IN PRESS(PSIG)	43.9	0.1
TS OUT PRESS(PSIG)	6.8	0.1
PUMP OUT PRESS(PSIG)	40.0	0.1
TS LINE PRESS IN(PSIG)	43.2	0.1
EXP TANK ARGON PRESS(PSIG)	3.4	0.1
TS BYP LINE PRESS IN(PSIG)	44.7	0.1
TS BYP LINE PRESS OUT(PSIG)	7.6	0.1

Test 11, run 161 (continued)

INSTRUMENT	20-SEC AVG	STD DEV	NORMALIZED TEMP
LOOP THERMOCOUPLES			
TEST SECT INLET WELL(DEG F)	827.8	0.6	
TEST SECT OUTLET WELL(DEG F)	976.3	0.4	
PUMP IN PIPE WALL TC	829.8	4.3	
PUMP OUT PIPE WALL TC	822.0	0.6	
RAD IN PIPE WALL TC	918.8	3.0	
RAD OUT PIPE WALL TC	824.0	2.7	
HEATER INTERNAL THERMOCOUPLES			
HTR TC IN HTR 08,12AB IN(DEG F)	1028.8	0.9	1.35
HTR TC IN HTR 13,12AB IN	977.4	0.5	1.01
HTR TC IN HTR 18,12AB IN	985.4	0.4	1.06
HTR TC IN HTR 22,12AB IN	914.1	0.5	0.58
HTR TC IN HTR 08,12BC IN	1023.9	1.0	1.32
HTR TC IN HTR 13,12BC IN	973.2	0.8	0.98
HTR TC IN HTR 18,12BC IN	987.0	0.7	1.07
HTR TC IN HTR 22,12BC IN	916.7	0.6	0.60
HTR TC IN HTR 09,15AB IN	1071.8	0.6	1.64
HTR TC IN HTR 10,15AB IN	1062.8	0.4	1.58
HTR TC IN HTR 16,15BC IN	1005.4	0.5	1.20
HTR TC IN HTR 25,15BC IN	885.9	1.0	0.39
HTR TC IN HTR 02,15.1 IN	1108.3	0.6	1.89
HTR TC IN HTR 03,15.1 IN	1132.3	0.8	2.05
HTR TC IN HTR 06,15.1 IN	1127.3	0.7	2.02
HTR TC IN HTR 15,15.1 IN	1095.9	0.3	1.80
HTR TC IN HTR 24,15.1 IN	945.8	0.3	0.79
HTR TC IN HTR 33,15.1 IN	928.5	0.2	0.68
HTR TC IN HTR 36,15.1 IN	898.3	1.0	0.47
HTR TC IN HTR 02,15.4 IN	1140.7	0.5	2.11
HTR TC IN HTR 03,15.4 IN	1154.1	0.8	2.20
HTR TC IN HTR 06,15.4 IN	1131.6	0.6	2.04
HTR TC IN HTR 15,15.4 IN	1090.0	0.6	1.76
HTR TC IN HTR 24,15.4 IN	944.7	0.4	0.79
HTR TC IN HTR 33,15.4 IN	932.3	0.6	0.70
HTR TC IN HTR 34,15.4 IN	954.3	0.9	0.85
HTR TC IN HTR 36,15.4 IN	895.4	0.5	0.46
HTR TC IN HTR 02,15.6 IN	1139.1	0.6	2.10
HTR TC IN HTR 03,15.6 IN	1145.8	0.8	2.14
HTR TC IN HTR 06,15.6 IN	1157.6	0.9	2.22
HTR TC IN HTR 15,15.6 IN	1087.2	0.5	1.75
HTR TC IN HTR 24,15.6 IN	930.5	0.7	0.69
HTR TC IN HTR 33,15.6 IN	939.2	0.8	0.75
HTR TC IN HTR 34,15.6 IN	937.6	0.6	0.74
HTR TC IN HTR 36,15.6 IN	890.4	0.3	0.42
HTR TC IN HTR 03,15.9 IN	1100.6	0.7	1.84
HTR TC IN HTR 06,15.9 IN	1168.2	1.0	2.29
HTR TC IN HTR 15,15.9 IN	1075.2	0.6	1.66
HTR TC IN HTR 24,15.9 IN	930.4	0.4	0.69
HTR TC IN HTR 33,15.9 IN	935.6	0.4	0.73

Test 11, run 161 (continued)

INSTRUMENT	20-SEC AVG	STD DEV	NORMALIZED TEMP
HTR TC IN HTR 34,15.9 IN	932.4	0.4	0.70
HTR TC IN HTR 36,15.9 IN	887.4	0.4	0.40
HTR TC IN HTR 04,16.1 IN	1131.9	0.8	2.05
HTR TC IN HTR 05,16.1 IN	1119.5	0.5	1.96
HTR TC IN HTR 07,16.1 IN	1131.2	1.4	2.04
HTR TC IN HTR 21,16.1 IN	892.1	0.3	0.43
HTR TC IN HTR 27,16.1 IN	937.5	0.9	0.74
HTR TC IN HTR 04,16.4 IN	1134.3	1.2	2.06
HTR TC IN HTR 05,16.4 IN	1122.5	1.0	1.98
HTR TC IN HTR 07,16.4 IN	1131.5	0.5	2.04
HTR TC IN HTR 21,16.4 IN	917.3	1.0	0.60
HTR TC IN HTR 27,16.4 IN	954.2	0.9	0.85
HTR TC IN HTR 04,16.6 IN	1133.8	0.7	2.06
HTR TC IN HTR 05,16.6 IN	1130.1	0.5	2.03
HTR TC IN HTR 07,16.6 IN	1122.0	0.4	1.98
HTR TC IN HTR 21,16.6 IN	934.2	0.9	0.72
HTR TC IN HTR 27,16.6 IN	954.9	0.8	0.86
HTR TC IN HTR 04,16.9 IN	1131.6	0.6	2.05
HTR TC IN HTR 07,16.9 IN	1121.6	0.5	1.98
HTR TC IN HTR 21,16.9 IN	912.9	0.4	0.57
HTR TC IN HTR 27,16.9 IN	938.3	0.4	0.74
HTR TC IN HTR 11,18AB IN	1120.8	0.7	1.97
HTR TC IN HTR 12,18AB IN	1088.2	0.5	1.75
HTR TC IN HTR 14,18AB IN	971.6	0.6	0.97
HTR TC IN HTR 30,18AB IN	1653.6	1.1	5.56
HTR TC IN HTR 11,18BC IN	1121.3	0.6	1.98
HTR TC IN HTR 12,18BC IN	1085.0	0.5	1.73
HTR TC IN HTR 14,18BC IN	1094.5	0.6	1.80
HTR TC IN HTR 17,18BC IN	1111.4	0.4	1.91
HTR TC IN HTR 30,18BC IN	1679.8	1.1	5.73
WIRE WRAP THERMOCOUPLES			
WW TC ON HTR 12,-1 IN(DEG F)	834.1	0.9	0.04
WW TC ON HTR 16,-1 IN	832.0	0.8	0.03
WW TC ON HTR 12,01 IN	851.2	0.4	0.16
WW TC ON HTR 16,09 IN	944.9	0.7	0.79
WW TC ON HTR 04,11 IN	990.1	0.5	1.09
WW TC ON HTR 05,11 IN	978.7	0.9	1.02
WW TC ON HTR 13,11 IN	973.6	0.7	0.98
WW TC ON HTR 17,11 IN	950.0	0.5	0.82
WW TC ON HTR 28,11 IN	917.7	0.5	0.61
WW TC ON HTR 31,11 IN	878.2	0.4	0.34
WW TC ON HTR 03,13 IN	1007.1	0.6	1.21
WW TC ON HTR 11,13 IN	1002.3	0.6	1.17
WW TC ON HTR 13,13 IN	978.7	1.3	1.02
WW TC ON HTR 15,13 IN	971.2	0.5	0.97
WW TC ON HTR 17,13 IN	952.1	0.5	0.84
WW TC ON HTR 22,13 IN	871.6	0.4	0.30
WW TC ON HTR 01,15 IN	1043.0	1.0	1.45
WW TC ON HTR 03,15 IN	1038.8	1.0	1.42

Test 11, run 161 (continued)

INSTRUMENT	20-SEC AVG	STD DEV	NORMALIZED TEMP
WW TC ON HTR 08,15 IN	992.1	0.6	1.11
WW TC ON HTR 10,15 IN	1007.6	0.4	1.21
WW TC ON HTR 15,15 IN	966.5	0.4	0.93
WW TC ON HTR 19,15 IN	1005.5	1.5	1.20
WW TC ON HTR 25,15 IN	890.6	0.5	0.42
WW TC ON HTR 36,15 IN	856.0	0.4	0.19
WW TC ON HTR 01,17 IN	1069.8	1.0	1.63
WW TC AJ HTR 02,17 IN	1043.2	0.5	1.45
WW TC OP HTR 02,17 IN	1055.5	0.6	1.53
WW TC ON HTR 08,17 IN	1007.0	0.4	1.21
WW TC ON HTR 10,17 IN	1000.8	0.7	1.16
WW TC ON HTR 11,17 IN	977.2	0.4	1.01
WW TC ON HTR 18,17 IN	1020.6	0.4	1.30
WW TC ON HTR 19,17 IN	1017.3	1.0	1.28
WW TC ON HTR 21,17 IN	913.7	1.0	0.58
WW TC ON HTR 22,17 IN	966.3	0.4	0.93
WW TC ON HTR 33,17 IN	863.5	0.5	0.24
WW TC ON HTR 37,17 IN	889.0	0.6	0.41
WW TC ON HTR 06,19 IN	1106.4	0.6	1.87
WW TC AJ HTR 07,19 IN	1074.0	0.7	1.66
WW TC OP HTR 07,19 IN	1086.0	0.7	1.74
WW TC ON HTR 09,19 IN	1068.9	1.0	1.62
WW TC ON HTR 14,19 IN	953.0	0.5	0.84
WW TC ON HTR 18,19 IN	1036.6	0.4	1.41
WW TC ON HTR 27,19 IN	867.0	1.0	0.26
WW TC ON HTR 30,19 IN	883.9	0.5	0.38
WW TC ON HTR 34,19 IN	956.5	1.5	0.87
WW TC ON HTR 36,19 IN	927.5	0.6	0.67
WW TC ON HTR 37,19 IN	885.2	0.5	0.39
WW TC ON HTR 05,21 IN	1107.8	0.8	1.88
WW TC ON HTR 06,21 IN	1125.1	0.8	2.00
WW TC ON HTR 21,21 IN	909.6	0.4	0.55
WW TC ON HTR 24,21 IN	881.5	0.3	0.36
WW TC ON HTR 25,21 IN	883.4	1.3	0.37
WW TC ON HTR 27,21 IN	898.1	0.4	0.47
WW TC ON HTR 30,21 IN	953.0	0.7	0.84
WW TC ON HTR 33,21 IN	950.0	1.1	0.82
WW TC ON HTR 34,21 IN	911.4	0.5	0.56
WW TC ON HTR 04,23 IN	1115.8	0.8	1.94
WW TC ON HTR 09,23 IN	994.3	0.4	1.12
WW TC ON HTR 14,23 IN	1008.5	1.1	1.22
WW TC ON HTR 24,23 IN	893.8	1.4	0.44
WW TC ON HTR 28,23 IN	931.1	0.6	0.70
WW TC ON HTR 31,23 IN	911.1	0.2	0.56
WW TC ON ROD 01,25 IN	1108.1	0.6	1.89
WW TC ON ROD 02,25 IN	1023.2	0.3	1.32
WW TC ON ROD 05,25 IN	1037.2	0.6	1.41
WW TC ON ROD 08,25 IN	917.7	0.3	0.61
WW TC ON ROD 14,25 IN	926.7	0.3	0.67
WW TC ON ROD 04,27 IN	1013.2	0.8	1.25
WW TC ON ROD 07,27 IN	1075.3	0.4	1.67

Test 11, run 161 (continued)

INSTRUMENT	20-SEC AVG	STD DEV	NORMALIZED TEMP
WW TC ON ROD 12,27 IN	929.3	0.5	0.68
WW TC ON ROD 16,27 IN	908.2	0.5	0.54
WW TC ON ROD 18,27 IN	939.4	0.4	0.75
WW TC ON ROD 03,29 IN	1080.5	0.4	1.70
WW TC ON ROD 06,29 IN	1040.6	0.2	1.43
WW TC ON ROD 10,29 IN	961.1	0.5	0.90
WW TC ON ROD 01,37 IN	1061.0	1.0	1.57
WW TC ON ROD 02,37 IN	979.9	0.4	1.02
WW TC ON ROD 08,37 IN	931.1	0.3	0.70
WW TC ON ROD 14,37 IN	977.1	0.4	1.01
WW TC ON ROD 04,51 IN	1011.9	0.4	1.24
WW TC ON ROD 07,51 IN	1013.5	0.3	1.25
WW TC ON ROD 12,51 IN	952.1	0.4	0.84
WW TC ON ROD 16,51 IN	964.8	0.9	0.92
WW TC ON ROD 18,51 IN	948.4	0.4	0.81
WW TC ON ROD 03,63 IN	1022.0	0.4	1.31
WW TC ON ROD 06,63 IN	988.7	0.3	1.08
WW TC ON ROD 10,63 IN	988.6	0.3	1.08
DUCT THERMOCOUPLES			
DUCT WALL TC,CH 38,19 IN(DEG F)	882.4	0.4	0.37
DUCT WALL TC,CH 53,19 IN	871.0	0.6	0.29
DUCT WALL TC,CH 28,21 IN	901.6	0.4	0.50
DUCT WALL TC,CH 43,21 IN	887.8	0.5	0.40
DUCT WALL TC,CH 44,21 IN	893.6	0.3	0.44
TEST SECTION HOUSING THERMOCOUPLES			
TS SHELL-BOT(DEG F)	834.4	2.2	
TS GUARD HTR-BOT	816.0	0.7	
TS HTR-BOT	773.7	0.6	
TS SHELL-LOW CTR	891.5	0.6	
TS GUARD HTR-LOW CTR	879.9	0.9	
TS HTR-LOW CTR	780.1	0.6	
TS SHELL-UP CTR	945.1	0.6	
TS GUARD HTR-UP CTR	914.4	0.3	
TS HTR-UP CTR	864.0	0.4	
TS SHELL-TOP	970.8	0.5	
TS GUARD HTR-TOP	954.2	0.4	
TS HTR-TOP	876.5	0.4	
REFERENCE BOX THERMOCOUPLES			
150 DEG REF BOX 1(DEG F)	150.5	1.3	
150 DEG REF BOX 2	152.0	0.4	
150 DEG REF BOX 3	154.3	0.8	
150 DEG REF BOX 4	152.6	0.4	
150 DEG REF BOX 5	150.3	0.3	
MISCELLANEOUS			
SOD PUMP SPEED(RPM)	1797.8	40.6	
EXPANSION TANK LEVEL(% FULL)	71.5	0.2	

TEST SERIES 10(BUNDLE 3C); TEST 11 RUN 162 03/07/78 10 28 55

CONDITIONS:

TEST SECTION FLOW: 2.73 L/S (43.1 GPM)

TEST SECTION POWER

19 CENTRAL HEATERS:	245.6 KW	(24.2 KW/M/ROD)	(7.4 KW/FT/ROD)
12 EDGE HEATERS:	140.2 KW	(21.9 KW/M/ROD)	(6.7 KW/FT/ROD)
TOTAL(31 HEATERS):	385.8 KW		

TEST SECTION INLET TEMPERATURE: 506 DEG C (942 DEG F)

TEST SECTION OUTLET TEMPERATURE: 635 DEG C (1175 DEG F)

HEAT BALANCE:

HEAT INPUT FROM 31 FUEL PIN SIMULATORS: 385.8 KW

HEAT ABSORBED BY SODIUM=

FLOW X SP.HEAT X (TS OUT TEMP - TS IN TEMP) 369.7 KW

% OF INPUT HEAT ACCOUNTED FOR: 95.8 %

INSTRUMENT	20-SEC AVG	STD DEV
HEATER POWER-CENTRAL RODS(KW)		
HTR POWER IN ROD 1	13.0	0.0
HTR POWER IN RODS 8,9,10	38.9	0.0
HTR POWER IN RODS 14,15,16	38.7	0.0
HTR POWER IN RODS 2,3,11,19	51.7	0.0
HTR POWER IN RODS 5,6,13,17	51.7	0.0
HTR POWER IN RODS 4,7,12,18	51.6	0.0
HEATER POWER-EDGE RODS(KW)		
HTR POWER IN RODS 30,31	23.2	0.0
HTR POWER IN RODS 24,25,27,28	46.8	0.0
HTR POWER IN RODS 33,34	23.3	0.0
HTR POWER IN RODS 21,22,36,37	46.9	0.0
FLOWS		
TEST SECTION(TS) FLOW IN(GPM)	43.1	0.1
TS FLOW OUT(GPM)	44.1	0.2
TS BYPASS FLOW(GPM)	-0.4	0.2
LOOP FLOW TOTAL(GPM)	42.4	0.3
RADIATOR AIR FLOW(CFM)	16.6	0.9
PRESSURES		
TS IN PRESS(PSIG)	41.1	0.1
TS OUT PRESS(PSIG)	7.0	0.1
PUMP OUT PRESS(PSIG)	37.2	0.1
TS LINE PRESS IN(PSIG)	40.6	0.1
EXP TANK ARGON PRESS(PSIG)	3.9	0.1
TS BYP LINE PRESS IN(PSIG)	41.9	0.1
TS BYP LINE PRESS OUT(PSIG)	7.8	0.1

Test 11, run 162 (continued)

INSTRUMENT	20-SEC AVG	STD DEV	NORMALIZED TEMP
LOOP THERMOCOUPLES			
TEST SECT INLET WELL(DEG F)	942.8	0.7	
TEST SECT OUTLET WELL(DEG F)	1175.3	0.4	
PUMP IN PIPE WALL TC	936.3	4.3	
PUMP OUT PIPE WALL TC	935.8	0.9	
RAD IN PIPE WALL TC	1098.0	8.9	
RAD OUT PIPE WALL TC	936.7	3.0	
HEATER INTERNAL THERMOCOUPLES			
HTR TC IN HTR 08,12AB IN(DEG F)	1159.6	0.3	0.93
HTR TC IN HTR 13,12AB IN	1142.3	0.4	0.86
HTR TC IN HTR 18,12AB IN	1150.3	0.6	0.89
HTR TC IN HTR 22,12AB IN	1142.2	0.4	0.86
HTR TC IN HTR 08,12BC IN	1153.1	0.4	0.90
HTR TC IN HTR 13,12BC IN	1144.1	0.6	0.87
HTR TC IN HTR 18,12BC IN	1152.0	0.6	0.90
HTR TC IN HTR 22,12BC IN	1139.4	0.4	0.85
HTR TC IN HTR 09,15AB IN	1209.6	0.5	1.15
HTR TC IN HTR 10,15AB IN	1196.7	0.5	1.09
HTR TC IN HTR 16,15BC IN	1176.2	0.7	1.00
HTR TC IN HTR 25,15BC IN	1163.3	0.5	0.95
HTR TC IN HTR 02,15.1 IN	1240.2	0.6	1.28
HTR TC IN HTR 03,15.1 IN	1245.3	0.8	1.30
HTR TC IN HTR 06,15.1 IN	1251.2	0.6	1.33
HTR TC IN HTR 15,15.1 IN	1222.1	0.4	1.20
HTR TC IN HTR 24,15.1 IN	1184.1	0.4	1.04
HTR TC IN HTR 33,15.1 IN	1178.5	0.4	1.01
HTR TC IN HTR 36,15.1 IN	1167.9	0.2	0.97
HTR TC IN HTR 02,15.4 IN	1262.0	0.6	1.37
HTR TC IN HTR 03,15.4 IN	1260.6	0.8	1.37
HTR TC IN HTR 06,15.4 IN	1254.5	0.4	1.34
HTR TC IN HTR 15,15.4 IN	1212.1	0.7	1.16
HTR TC IN HTR 24,15.4 IN	1198.1	0.5	1.10
HTR TC IN HTR 33,15.4 IN	1181.0	0.3	1.02
HTR TC IN HTR 34,15.4 IN	1176.1	1.0	1.00
HTR TC IN HTR 36,15.4 IN	1166.0	0.6	0.96
HTR TC IN HTR 02,15.6 IN	1258.9	0.6	1.36
HTR TC IN HTR 03,15.6 IN	1258.3	0.7	1.36
HTR TC IN HTR 06,15.6 IN	1284.9	0.6	1.47
HTR TC IN HTR 15,15.6 IN	1208.6	0.3	1.14
HTR TC IN HTR 24,15.6 IN	1194.6	0.4	1.08
HTR TC IN HTR 33,15.6 IN	1180.1	0.4	1.02
HTR TC IN HTR 34,15.6 IN	1174.6	0.6	1.00
HTR TC IN HTR 36,15.6 IN	1156.0	0.4	0.92
HTR TC IN HTR 03,15.9 IN	1224.6	0.7	1.21
HTR TC IN HTR 06,15.9 IN	1310.0	1.1	1.58
HTR TC IN HTR 15,15.9 IN	1195.2	0.5	1.09
HTR TC IN HTR 24,15.9 IN	1196.2	0.5	1.09
HTR TC IN HTR 33,15.9 IN	1176.1	0.4	1.00

Test 11, run 162 (continued)

INSTRUMENT	20-SEC AVG	STD DEV	NORMALIZED TEMP
HTR TC IN HTR 34,15.9 IN	1168.5	0.5	0.97
HTR TC IN HTR 36,15.9 IN	1152.5	0.4	0.90
HTR TC IN HTR 04,16.1 IN	1249.6	0.4	1.32
HTR TC IN HTR 05,16.1 IN	1244.5	0.5	1.30
HTR TC IN HTR 07,16.1 IN	1255.3	0.3	1.34
HTR TC IN HTR 21,16.1 IN	1172.8	0.6	0.99
HTR TC IN HTR 27,16.1 IN	1194.1	0.4	1.08
HTR TC IN HTR 04,16.4 IN	1252.8	0.3	1.33
HTR TC IN HTR 05,16.4 IN	1247.7	0.4	1.31
HTR TC IN HTR 07,16.4 IN	1255.5	0.5	1.34
HTR TC IN HTR 21,16.4 IN	1177.0	0.6	1.01
HTR TC IN HTR 27,16.4 IN	1198.4	0.5	1.10
HTR TC IN HTR 04,16.6 IN	1253.7	0.5	1.34
HTR TC IN HTR 05,16.6 IN	1253.4	0.5	1.34
HTR TC IN HTR 07,16.6 IN	1246.0	0.5	1.30
HTR TC IN HTR 21,16.6 IN	1188.1	0.5	1.05
HTR TC IN HTR 27,16.6 IN	1196.0	0.4	1.09
HTR TC IN HTR 04,16.9 IN	1215.8	0.7	1.17
HTR TC IN HTR 07,16.9 IN	1244.7	0.5	1.30
HTR TC IN HTR 21,16.9 IN	1187.3	0.4	1.05
HTR TC IN HTR 27,16.9 IN	1190.7	0.5	1.07
HTR TC IN HTR 11,18AB IN	1254.2	0.6	1.34
HTR TC IN HTR 12,18AB IN	1229.9	0.7	1.23
HTR TC IN HTR 14,18AB IN	1172.0	0.4	0.99
HTR TC IN HTR 30,18AB IN	1896.0	0.0	4.10
HTR TC IN HTR 11,18BC IN	1253.9	0.5	1.34
HTR TC IN HTR 12,18BC IN	1228.6	0.4	1.23
HTR TC IN HTR 14,18BC IN	1176.7	0.6	1.01
HTR TC IN HTR 17,18BC IN	1245.8	0.4	1.30
HTR TC IN HTR 30,18BC IN	1896.0	0.0	4.10
WIRE WRAP THERMOCOUPLES			
WW TC ON HTR 12,-1 IN(DEG F)	948.4	0.5	0.02
WW TC ON HTR 16,-1 IN	947.4	0.4	0.02
WW TC ON HTR 12,01 IN	965.7	0.4	0.10
WW TC ON HTR 16,09 IN	1072.3	0.5	0.56
WW TC ON HTR 04,11 IN	1108.5	0.6	0.71
WW TC ON HTR 05,11 IN	1097.4	0.4	0.66
WW TC ON HTR 13,11 IN	1100.6	0.4	0.68
WW TC ON HTR 17,11 IN	1094.0	0.4	0.65
WW TC ON HTR 28,11 IN	1082.5	0.5	0.60
WW TC ON HTR 31,11 IN	1079.1	0.4	0.59
WW TC ON HTR 03,13 IN	1126.1	0.5	0.79
WW TC ON HTR 11,13 IN	1129.2	0.7	0.80
WW TC ON HTR 13,13 IN	1120.1	0.4	0.76
WW TC ON HTR 15,13 IN	1121.5	0.4	0.77
WW TC ON HTR 17,13 IN	1118.6	0.5	0.76
WW TC ON HTR 22,13 IN	1099.1	0.4	0.67
WW TC ON HTR 01,15 IN	1162.1	0.3	0.94
WW TC ON HTR 03,15 IN	1160.7	0.6	0.94

Test 11, run 162 (continued)

INSTRUMENT	20-SEC AVG	STD DEV	NORMALIZED TEMP
WW TC ON HTR 08,15 IN	1139.9	0.4	0.85
WW TC ON HTR 10,15 IN	1145.4	0.6	0.87
WW TC ON HTR 15,15 IN	1142.0	0.3	0.86
WW TC ON HTR 19,15 IN	1146.2	0.4	0.87
WW TC ON HTR 25,15 IN	1091.1	0.4	0.64
WW TC ON HTR 36,15 IN	1078.5	0.4	0.58
WW TC ON HTR 01,17 IN	1198.7	0.5	1.10
WW TC AJ HTR 02,17 IN	1174.0	0.7	0.99
WW TC OP HTR 02,17 IN	1181.0	0.5	1.02
WW TC ON HTR 08,17 IN	1161.7	0.4	0.94
WW TC ON HTR 10,17 IN	1162.2	0.5	0.94
WW TC ON HTR 11,17 IN	1153.7	0.6	0.91
WW TC ON HTR 18,17 IN	1166.5	0.4	0.96
WW TC ON HTR 19,17 IN	1165.8	0.5	0.96
WW TC ON HTR 21,17 IN	1147.0	0.4	0.88
WW TC ON HTR 22,17 IN	1159.7	0.4	0.93
WW TC ON HTR 33,17 IN	1099.1	0.4	0.67
WW TC ON HTR 37,17 IN	1121.5	0.3	0.77
WW TC ON HTR 06,19 IN	1233.2	0.5	1.25
WW TC AJ HTR 07,19 IN	1208.5	0.6	1.14
WW TC OP HTR 07,19 IN	1218.0	0.5	1.18
WW TC ON HTR 09,19 IN	1208.4	0.5	1.14
WW TC ON HTR 14,19 IN	1160.4	0.4	0.94
WW TC ON HTR 18,19 IN	1184.0	0.5	1.04
WW TC ON HTR 27,19 IN	1109.1	0.2	0.72
WW TC ON HTR 30,19 IN	1122.7	0.5	0.77
WW TC ON HTR 34,19 IN	1165.1	0.4	0.96
WW TC ON HTR 36,19 IN	1153.8	0.4	0.91
WW TC ON HTR 37,19 IN	1121.4	0.3	0.77
WW TC ON HTR 05,21 IN	1242.4	0.5	1.29
WW TC ON HTR 06,21 IN	1251.5	0.5	1.33
WW TC ON HTR 21,21 IN	1150.8	0.4	0.89
WW TC ON HTR 24,21 IN	1137.6	0.4	0.84
WW TC ON HTR 25,21 IN	1120.2	1.2	0.76
WW TC ON HTR 27,21 IN	1144.9	0.5	0.87
WW TC ON HTR 30,21 IN	1176.9	0.4	1.01
WW TC ON HTR 33,21 IN	1186.1	0.3	1.05
WW TC ON HTR 34,21 IN	1153.1	0.3	0.90
WW TC ON HTR 04,23 IN	1245.9	0.5	1.30
WW TC ON HTR 09,23 IN	1196.3	0.4	1.09
WW TC ON HTR 14,23 IN	1192.5	0.5	1.07
WW TC ON HTR 24,23 IN	1139.0	0.3	0.84
WW TC ON HTR 28,23 IN	1162.6	0.6	0.95
WW TC ON HTR 31,23 IN	1142.5	0.4	0.86
WW TC ON ROD 01,25 IN	1235.4	0.4	1.26
WW TC ON ROD 02,25 IN	1190.3	0.4	1.06
WW TC ON ROD 05,25 IN	1203.6	0.3	1.12
WW TC ON ROD 08,25 IN	1138.8	0.3	0.84
WW TC ON ROD 14,25 IN	1153.1	0.3	0.90
WW TC ON ROD 04,27 IN	1191.4	0.5	1.07
WW TC ON ROD 07,27 IN	1217.1	0.3	1.18

Test 11, run 162 (continued)

INSTRUMENT	20-SEC AVG	STD DEV	NORMALIZED TEMP
WW TC ON ROD 12,27 IN	1150.3	0.4	0.89
WW TC ON ROD 16,27 IN	1134.8	0.2	0.83
WW TC ON ROD 18,27 IN	1158.1	0.3	0.93
WW TC ON ROD 03,29 IN	1222.8	0.4	1.20
WW TC ON ROD 06,29 IN	1205.1	0.4	1.13
WW TC ON ROD 10,29 IN	1161.3	0.4	0.94
WW TC ON ROD 01,37 IN	1212.6	0.3	1.16
WW TC ON ROD 02,37 IN	1175.5	0.4	1.00
WW TC ON ROD 08,37 IN	1149.5	0.5	0.89
WW TC ON ROD 14,37 IN	1175.4	0.1	1.00
WW TC ON ROD 04,51 IN	1187.0	0.3	1.05
WW TC ON ROD 07,51 IN	1192.0	0.3	1.07
WW TC ON ROD 12,51 IN	1159.6	0.2	0.93
WW TC ON ROD 16,51 IN	1166.3	0.2	0.96
WW TC ON ROD 18,51 IN	1159.0	0.3	0.93
WW TC ON ROD 03,63 IN	1194.9	0.4	1.08
WW TC ON ROD 06,63 IN	1178.5	0.4	1.01
WW TC ON ROD 10,63 IN	1178.7	0.3	1.01
DUCT THERMOCOUPLES			
DUCT WALL TC,CH 38,19 IN(DEG F)	1092.8	0.4	0.65
DUCT WALL TC,CH 53,19 IN	1092.8	0.3	0.64
DUCT WALL TC,CH 28,21 IN	1122.3	0.1	0.77
DUCT WALL TC,CH 43,21 IN	1125.1	0.4	0.78
DUCT WALL TC,CH 44,21 IN	1121.3	0.4	0.77
TEST SECTION HOUSING THERMOCOUPLES			
TS SHELL-BOT(DEG F)	949.0	4.3	
TS GUARD HTR-BOT	898.9	0.7	
TS HTR-BOT	831.8	0.3	
TS SHELL-LOW CTR	1113.2	0.3	
TS GUARD HTR-LOW CTR	1079.0	0.5	
TS HTR-LOW CTR	959.8	0.4	
TS SHELL-UP CTR	1161.6	0.4	
TS GUARD HTR-UP CTR	1093.5	0.4	
TS HTR-UP CTR	1015.0	0.3	
TS SHELL-TOP	1172.2	0.4	
TS GUARD HTR-TOP	1116.4	0.6	
TS HTR-TOP	1041.5	0.3	
REFERENCE BOX THERMOCOUPLES			
150 DEG REF BOX 1(DEG F)	150.5	0.4	
150 DEG REF BOX 2	151.9	0.4	
150 DEG REF BOX 3	154.3	0.4	
150 DEG REF BOX 4	152.9	0.3	
150 DEG REF BOX 5	150.8	0.4	
MISCELLANEOUS			
SOD PUMP SPEED(RPM)	1729.1	16.5	
EXPANSION TANK LEVEL(% FULL)	70.9	0.2	

TEST SERIES 10(BUNDLE 3C); TEST 11 RUN 163 03/07/78 11 15 47

CONDITIONS:

TEST SECTION FLOW: 2.74 L/S (43.3 GPM)

TEST SECTION POWER

19 CENTRAL HEATERS: 244.8 KW (24.2 KW/M/ROD) (7.4 KW/FT/ROD)

12 EDGE HEATERS: 154.0 KW (24.0 KW/M/ROD) (7.3 KW/FT/ROD)

TOTAL(31 HEATERS): 398.8 KW

TEST SECTION INLET TEMPERATURE: 516 DEG C (961 DEG F)

TEST SECTION OUTLET TEMPERATURE: 649 DEG C (1201 DEG F)

HEAT BALANCE:

HEAT INPUT FROM 31 FUEL PIN SIMULATORS: 398.8 KW

HEAT ABSORBED BY SODIUM=

FLOW X SP.HEAT X (TS OUT TEMP - TS IN TEMP) 381.7 KW

% OF INPUT HEAT ACCOUNTED FOR: 95.7 %

INSTRUMENT	20-SEC AVG	STD DEV
HEATER POWER-CENTRAL RODS(KW)		
HTR POWER IN ROD 1	12.9	0.0
HTR POWER IN RODS 8,9,10	38.8	0.0
HTR POWER IN RODS 14,15,16	38.6	0.0
HTR POWER IN RODS 2,3,11,19	51.6	0.0
HTR POWER IN RODS 5,6,13,17	51.5	0.0
HTR POWER IN RODS 4,7,12,18	51.5	0.0
HEATER POWER-EDGE RODS(KW)		
HTR POWER IN RODS 30,31	25.2	0.0
HTR POWER IN RODS 24,25,27,28	50.8	0.0
HTR POWER IN RODS 33,34	25.9	0.0
HTR POWER IN RODS 21,22,36,37	52.2	0.0
FLOWS		
TEST SECTION(TS) FLOW IN(GPM)	43.3	0.1
TS FLOW OUT(GPM)	44.4	0.2
TS BYPASS FLOW(GPM)	0.0	0.1
LOOP FLOW TOTAL(GPM)	42.6	0.3
RADIATOR AIR FLOW(CFM)	16.5	0.9
PRESSURES		
TS IN PRESS(PSIG)	40.8	0.1
TS OUT PRESS(PSIG)	7.0	0.1
PUMP OUT PRESS(PSIG)	36.9	0.0
TS LINE PRESS IN(PSIG)	40.3	0.1
EXP TANK ARGON PRESS(PSIG)	3.9	0.1
TS BYP LINE PRESS IN(PSIG)	41.6	0.1
TS BYP LINE PRESS OUT(PSIG)	7.9	0.1

Test 11, run 163 (continued)

INSTRUMENT	20-SEC AVG	STD DEV	NORMALIZED TEMP
LOOP THERMOCOUPLES			
TEST SECT INLET WELL(DEG F)	961.8	0.4	
TEST SECT OUTLET WELL(DEG F)	1201.8	0.5	
PUMP IN PIPE WALL TC	955.8	4.3	
PUMP OUT PIPE WALL TC	955.6	0.4	
RAD IN PIPE WALL TC	1121.5	7.2	
RAD OUT PIPE WALL TC	957.2	4.6	
HEATER INTERNAL THERMOCOUPLES			
HTR TC IN HTR 08,12AB IN(DEG F)	1179.3	0.5	0.91
HTR TC IN HTR 13,12AB IN	1164.7	0.3	0.85
HTR TC IN HTR 18,12AB IN	1174.7	0.4	0.89
HTR TC IN HTR 22,12AB IN	1172.9	0.2	0.88
HTR TC IN HTR 08,12BC IN	1173.6	0.4	0.88
HTR TC IN HTR 13,12BC IN	1166.5	0.4	0.85
HTR TC IN HTR 18,12BC IN	1175.5	0.4	0.89
HTR TC IN HTR 22,12BC IN	1169.6	0.2	0.87
HTR TC IN HTR 09,15AB IN	1230.6	0.5	1.12
HTR TC IN HTR 10,15AB IN	1216.9	0.4	1.06
HTR TC IN HTR 16,15BC IN	1202.0	0.5	1.00
HTR TC IN HTR 25,15BC IN	1196.5	0.4	0.98
HTR TC IN HTR C2,15.1 IN	1260.3	0.7	1.24
HTR TC IN HTR 03,15.1 IN	1263.8	0.8	1.26
HTR TC IN HTR 06,15.1 IN	1269.5	0.6	1.28
HTR TC IN HTR 15,15.1 IN	1241.5	0.4	1.17
HTR TC IN HTR 24,15.1 IN	1213.4	0.3	1.05
HTR TC IN HTR 33,15.1 IN	1212.5	0.4	1.04
HTR TC IN HTR 36,15.1 IN	1204.4	0.3	1.01
HTR TC IN HTR 02,15.4 IN	1279.8	0.6	1.33
HTR TC IN HTR 03,15.4 IN	1284.2	0.6	1.34
HTR TC IN HTR 06,15.4 IN	1273.7	0.5	1.30
HTR TC IN HTR 15,15.4 IN	1230.2	0.6	1.12
HTR TC IN HTR 24,15.4 IN	1229.0	0.4	1.11
HTR TC IN HTR 33,15.4 IN	1215.1	0.4	1.06
HTR TC IN HTR 34,15.4 IN	1208.3	0.6	1.03
HTR TC IN HTR 36,15.4 IN	1201.2	0.4	1.00
HTR TC IN HTR 02,15.6 IN	1275.5	0.6	1.31
HTR TC IN HTR 03,15.6 IN	1279.8	0.5	1.33
HTR TC IN HTR C6,15.6 IN	1296.0	0.6	1.39
HTR TC IN HTR 15,15.6 IN	1226.6	0.4	1.10
HTR TC IN HTR 24,15.6 IN	1226.5	0.4	1.10
HTR TC IN HTR 33,15.6 IN	1212.7	0.3	1.05
HTR TC IN HTR 34,15.6 IN	1205.0	0.5	1.01
HTR TC IN HTR 36,15.6 IN	1191.1	0.2	0.96
HTR TC IN HTR 03,15.9 IN	1242.5	0.8	1.17
HTR TC IN HTR C6,15.9 IN	1320.7	0.5	1.50
HTR TC IN HTR 15,15.9 IN	1214.2	0.4	1.05
HTR TC IN HTR 24,15.9 IN	1228.2	0.4	1.11
HTR TC IN HTR 33,15.9 IN	1208.3	0.4	1.03

Test 11, run 163 (continued)

INSTRUMENT	20-SEC AVG	STD DEV	NORMALIZED TEMP
HTR TC IN HTR 34,15.9 IN	1200.1	0.3	0.99
HTR TC IN HTR 36,15.9 IN	1187.3	0.4	0.94
HTR TC IN HTR 04,16.1 IN	1267.1	0.3	1.27
HTR TC IN HTR 05,16.1 IN	1260.8	0.4	1.25
HTR TC IN HTR 07,16.1 IN	1277.8	0.4	1.32
HTR TC IN HTR 21,16.1 IN	1210.2	0.3	1.03
HTR TC IN HTR 27,16.1 IN	1224.8	0.4	1.10
HTR TC IN HTR 04,16.4 IN	1269.1	0.5	1.28
HTR TC IN HTR 05,16.4 IN	1263.5	0.3	1.26
HTR TC IN HTR 07,16.4 IN	1277.9	0.4	1.32
HTR TC IN HTR 21,16.4 IN	1214.6	0.6	1.05
HTR TC IN HTR 27,16.4 IN	1229.3	0.3	1.11
HTR TC IN HTR 04,16.6 IN	1271.3	0.5	1.29
HTR TC IN HTR 05,16.6 IN	1272.2	0.7	1.29
HTR TC IN HTR 07,16.6 IN	1267.8	0.4	1.27
HTR TC IN HTR 21,16.6 IN	1224.7	0.5	1.10
HTR TC IN HTR 27,16.6 IN	1226.6	0.4	1.10
HTR TC IN HTR 04,16.9 IN	1245.1	0.6	1.18
HTR TC IN HTR 07,16.9 IN	1267.6	0.4	1.27
HTR TC IN HTR 21,16.9 IN	1223.2	0.4	1.09
HTR TC IN HTR 27,16.9 IN	1221.0	0.3	1.08
HTR TC IN HTR 11,18AB IN	1273.3	0.6	1.30
HTR TC IN HTR 12,18AB IN	1251.7	0.5	1.21
HTR TC IN HTR 14,18AB IN	1198.8	0.5	0.99
HTR TC IN HTR 30,18AB IN	1896.0	0.0	3.89
HTR TC IN HTR 11,18BC IN	1273.2	0.4	1.30
HTR TC IN HTR 12,18BC IN	1250.4	0.6	1.20
HTR TC IN HTR 14,18BC IN	1203.1	0.5	1.01
HTR TC IN HTR 17,18BC IN	1265.4	0.3	1.26
HTR TC IN HTR 30,18BC IN	1896.0	0.0	3.89
WIRE WRAP THERMCCOUPLES			
WW TC ON HTR 12,-1 IN(DEG F)	967.5	0.4	0.02
WW TC ON HTR 16,-1 IN	966.2	0.4	0.02
WW TC ON HTR 12,01 IN	985.3	3.1	0.10
WW TC ON HTR 16,09 IN	1091.8	0.3	0.54
WW TC ON HTR 04,11 IN	1126.6	0.5	0.69
WW TC ON HTR 05,11 IN	1116.3	0.4	0.64
WW TC ON HTR 13,11 IN	1118.8	0.4	0.65
WW TC ON HTR 17,11 IN	1115.8	0.4	0.64
WW TC ON HTR 28,11 IN	1106.0	0.4	0.60
WW TC ON HTR 31,11 IN	1106.1	0.4	0.60
WW TC ON HTR 03,13 IN	1136.4	0.6	0.73
WW TC ON HTR 11,13 IN	1148.7	0.5	0.78
WW TC ON HTR 13,13 IN	1140.6	0.3	0.75
WW TC ON HTR 15,13 IN	1143.6	0.4	0.76
WW TC ON HTR 17,13 IN	1142.4	0.4	0.75
WW TC ON HTR 22,13 IN	1130.6	0.3	0.70
WW TC ON HTR 01,15 IN	1178.6	0.3	0.90
WW TC ON HTR 03,15 IN	1177.3	0.5	0.90

Test 11, run 163 (continued)

INSTRUMENT	20-SEC AVG	STD DEV	NORMALIZED TEMP
WW TC ON HTR 08,15 IN	1161.5	0.4	0.83
WW TC ON HTR 10,15 IN	1166.1	0.5	0.85
WW TC ON HTR 15,15 IN	1165.7	0.4	0.85
WW TC ON HTR 19,15 IN	1166.2	0.4	0.85
WW TC ON HTR 25,15 IN	1119.8	0.2	0.66
WW TC ON HTR 36,15 IN	1109.2	0.2	0.61
WW TC ON HTR 01,17 IN	1213.6	0.4	1.05
WW TC AJ HTR 02,17 IN	1194.2	0.6	0.97
WW TC OP HTR 02,17 IN	1201.7	0.5	1.00
WW TC ON HTR 08,17 IN	1183.2	0.4	0.92
WW TC ON HTR 10,17 IN	1184.0	0.5	0.93
WW TC ON HTR 11,17 IN	1176.7	0.6	0.90
WW TC ON HTR 18,17 IN	1187.2	0.4	0.94
WW TC ON HTR 19,17 IN	1186.2	0.4	0.94
WW TC ON HTR 21,17 IN	1179.9	0.5	0.91
WW TC ON HTR 22,17 IN	1186.2	0.4	0.93
WW TC ON HTR 33,17 IN	1131.1	0.5	0.71
WW TC ON HTR 37,17 IN	1153.1	0.3	0.80
WW TC ON HTR 06,19 IN	1251.9	0.5	1.21
WW TC AJ HTR 07,19 IN	1229.3	1.1	1.11
WW TC OP HTR 07,19 IN	1237.8	0.4	1.15
WW TC ON HTR 09,19 IN	1229.3	0.5	1.11
WW TC ON HTR 14,19 IN	1185.3	0.3	0.93
WW TC ON HTR 18,19 IN	1205.5	0.4	1.02
WW TC ON HTR 27,19 IN	1139.1	0.4	0.74
WW TC ON HTR 30,19 IN	1153.8	0.3	0.80
WW TC ON HTR 34,19 IN	1193.7	0.3	0.97
WW TC ON HTR 36,19 IN	1184.8	0.4	0.93
WW TC ON HTR 37,19 IN	1152.3	0.3	0.79
WW TC ON HTR 05,21 IN	1260.1	0.4	1.24
WW TC ON HTR 06,21 IN	1270.1	0.5	1.28
WW TC ON HTR 21,21 IN	1181.9	0.3	0.92
WW TC ON HTR 24,21 IN	1167.7	0.4	0.86
WW TC ON HTR 25,21 IN	1150.5	0.4	0.79
WW TC ON HTR 27,21 IN	1175.8	0.4	0.89
WW TC ON HTR 30,21 IN	1205.8	0.4	1.02
WW TC ON HTR 33,21 IN	1217.8	0.3	1.07
WW TC ON HTR 34,21 IN	1185.3	0.3	0.93
WW TC ON HTR 04,23 IN	1263.2	0.5	1.26
WW TC ON HTR 09,23 IN	1223.8	0.4	1.09
WW TC ON HTR 14,23 IN	1215.6	0.4	1.06
WW TC ON HTR 24,23 IN	1168.3	0.4	0.86
WW TC ON HTR 28,23 IN	1190.0	0.5	0.95
WW TC ON HTR 31,23 IN	1172.7	0.3	0.88
WW TC ON ROD 01,25 IN	1254.2	0.4	1.22
WW TC ON ROD 02,25 IN	1214.5	0.3	1.05
WW TC ON ROD 05,25 IN	1226.4	0.4	1.10
WW TC ON ROD 08,25 IN	1168.7	0.2	0.86
WW TC ON ROD 14,25 IN	1182.8	0.1	0.92
WW TC ON ROD 04,27 IN	1216.1	0.6	1.06
WW TC ON ROD 07,27 IN	1239.5	0.2	1.16

Test 11, run 163 (continued)

INSTRUMENT	20-SEC AVG	STD DEV	NORMALIZED TEMP
WW TC ON ROD 12,27 IN	1179.0	0.4	0.90
WW TC ON ROD 16,27 IN	1166.3	0.2	0.85
WW TC ON ROD 18,27 IN	1187.8	0.2	0.94
WW TC ON ROD 03,29 IN	1241.3	0.4	1.16
WW TC ON ROD 06,29 IN	1227.3	0.4	1.11
WW TC ON ROD 10,29 IN	1187.2	0.4	0.94
WW TC ON ROD 01,37 IN	1234.6	0.4	1.14
WW TC ON ROD 02,37 IN	1201.6	0.4	1.00
WW TC ON ROD 08,37 IN	1180.3	0.3	0.91
WW TC ON ROD 14,37 IN	1203.4	0.3	1.01
WW TC ON ROD 04,51 IN	1210.7	0.4	1.04
WW TC ON ROD 07,51 IN	1217.3	0.4	1.06
WW TC ON ROD 12,51 IN	1186.2	0.2	0.93
WW TC ON ROD 16,51 IN	1195.3	0.2	0.97
WW TC ON ROD 18,51 IN	1187.9	0.3	0.94
WW TC ON ROD 03,63 IN	1218.0	0.4	1.07
WW TC ON ROD 06,63 IN	1205.7	0.4	1.02
WW TC ON ROD 10,63 IN	1203.5	0.3	1.01
DUCT THERMOCOUPLES			
DUCT WALL TC,CH 38,19 IN(DEG F)	1119.9	0.2	0.66
DUCT WALL TC,CH 53,19 IN	1124.1	0.3	0.68
DUCT WALL TC,CH 28,21 IN	1152.1	0.2	0.79
DUCT WALL TC,CH 43,21 IN	1156.0	0.4	0.81
DUCT WALL TC,CH 44,21 IN	1152.1	0.2	0.79
TEST SECTION HOUSING THERMOCOUPLES			
TS SHELL-BOT(DEG F)	968.5	3.7	
TS GUARD HTR-BOT	911.9	0.6	
TS HTR-BOT	841.8	0.2	
TS SHELL-LOW CTR	1141.0	0.4	
TS GUARD HTR-LOW CTR	1101.8	0.2	
TS HTR-LOW CTR	975.7	0.4	
TS SHELL-UP CTR	1188.9	0.4	
TS GUARD HTR-UP CTR	1114.9	0.2	
TS HTR-UP CTR	1033.0	0.4	
TS SHELL-TOP	1198.4	0.7	
TS GUARD HTR-TOP	1139.2	0.5	
TS HTR-TOP	1060.2	0.4	
REFERENCE BOX THERMOCOUPLES			
150 DEG REF BOX 1(DEG F)	150.4	0.7	
150 DEG REF BOX 2	151.8	0.4	
150 DEG REF BOX 3	153.9	0.3	
150 DEG REF BOX 4	152.7	0.4	
150 DEG REF BOX 5	150.4	0.2	
MISCELLANEOUS			
SOD PUMP SPEED(RPM)	1723.8	36.5	
EXPANSION TANK LEVEL(% FULL)	70.2	0.1	

TEST SERIES 10(BUNDLE 3C); TEST 11 RUN 164 03/07/78 12 10 2

CONDITIONS:

TEST SECTION FLOW: 2.77 L/S (43.7 GPM)

TEST SECTION POWER

19 CENTRAL HEATERS: 248.8 KW (24.5 KW/M/ROD) (7.5 KW/FT/ROD)

12 EDGE HEATERS: 175.0 KW (27.3 KW/M/ROD) (8.3 KW/FT/ROD)

TOTAL(31 HEATERS): 423.8 KW

TEST SECTION INLET TEMPERATURE: 538 DEG C (1001 DEG F)

TEST SECTION OUTLET TEMPERATURE: 678 DEG C (1253 DEG F)

HEAT BALANCE:

HEAT INPUT FROM 31 FUEL PIN SIMULATORS: 423.8 KW

HEAT ABSORBED BY SODIUM=

FLOW X SP.HEAT X (TS OUT TEMP - TS IN TEMP) 402.1 KW

% OF INPUT HEAT ACCOUNTED FOR: 94.9 %

INSTRUMENT	20-SEC AVG	STD DEV
HEATER POWER-CENTRAL RODS(KW)		
HTR POWER IN ROD 1	13.1	0.0
HTR POWER IN RODS 8,9,10	39.1	0.0
HTR POWER IN RODS 14,15,16	39.2	0.0
HTR POWER IN RODS 2,3,11,19	52.3	0.0
HTR POWER IN RODS 5,6,13,17	52.5	0.0
HTR POWER IN RODS 4,7,12,18	52.5	0.0
HEATER POWER-EDGE RODS(KW)		
HTR POWER IN RODS 30,31	29.0	0.0
HTR POWER IN RODS 24,25,27,28	58.4	0.0
HTR POWER IN RODS 33,34	29.1	0.0
HTR POWER IN RODS 21,22,36,37	58.6	0.0
FLOWS		
TEST SECTION(TS) FLOW IN(GPM)	43.7	0.1
TS FLOW OUT(GPM)	44.8	0.2
TS BYPASS FLOW(GPM)	0.1	0.2
LOOP FLOW TOTAL(GPM)	43.0	0.3
RADIATOR AIR FLOW(CFM)	16.8	0.8
PRESSURES		
TS IN PRESS(PSIG)	40.4	0.1
TS OUT PRESS(PSIG)	7.1	0.1
PUMP OUT PRESS(PSIG)	36.5	0.1
TS LINE PRESS IN(PSIG)	39.9	0.1
EXP TANK ARGON PRESS(PSIG)	3.9	0.1
TS BYP LINE PRESS IN(PSIG)	41.3	0.1
TS BYP LINE PRESS OUT(PSIG)	7.8	0.1

Test 11, run 164 (continued)

INSTRUMENT	20-SEC AVG	STD DEV	NORMALIZED TEMP
LOOP THERMOCOUPLES			
TEST SECT INLET WELL(DEG F)	1001.6	0.6	
TEST SECT OUTLET WELL(DEG F)	1253.8	0.4	
PUMP IN PIPE WALL TC	996.3	3.6	
PUMP OUT PIPE WALL TC	995.7	0.4	
RAD IN PIPE WALL TC	1166.0	10.4	
RAD OUT PIPE WALL TC	997.3	4.4	
HEATER INTERNAL THERMOCOUPLES			
HTR TC IN HTR 08,12AB IN(DEG F)	1221.0	0.3	0.87
HTR TC IN HTR 13,12AB IN	1215.1	0.4	0.85
HTR TC IN HTR 18,12AB IN	1222.4	0.4	0.88
HTR TC IN HTR 22,12AB IN	1226.8	0.4	0.89
HTR TC IN HTR 08,12BC IN	1214.6	0.5	0.84
HTR TC IN HTR 13,12BC IN	1217.0	0.5	0.85
HTR TC IN HTR 18,12BC IN	1223.5	0.8	0.88
HTR TC IN HTR 22,12BC IN	1222.8	0.3	0.88
HTR TC IN HTR 09,15AB IN	1272.7	0.4	1.07
HTR TC IN HTR 10,15AB IN	1258.0	0.5	1.02
HTR TC IN HTR 16,15BC IN	1251.4	0.5	0.99
HTR TC IN HTR 25,15BC IN	1259.0	0.4	1.02
HTR TC IN HTR 02,15.1 IN	1307.1	0.6	1.21
HTR TC IN HTR 03,15.1 IN	1312.4	0.6	1.23
HTR TC IN HTR 06,15.1 IN	1331.1	0.8	1.31
HTR TC IN HTR 15,15.1 IN	1285.0	0.5	1.12
HTR TC IN HTR 24,15.1 IN	1273.2	0.4	1.08
HTR TC IN HTR 33,15.1 IN	1270.8	0.4	1.07
HTR TC IN HTR 36,15.1 IN	1265.4	0.6	1.05
HTR TC IN HTR 02,15.4 IN	1336.2	0.6	1.33
HTR TC IN HTR 03,15.4 IN	1312.4	0.6	1.23
HTR TC IN HTR 06,15.4 IN	1338.8	0.8	1.34
HTR TC IN HTR 15,15.4 IN	1272.8	0.4	1.08
HTR TC IN HTR 24,15.4 IN	1292.7	0.4	1.15
HTR TC IN HTR 33,15.4 IN	1273.0	0.3	1.08
HTR TC IN HTR 34,15.4 IN	1261.3	1.2	1.03
HTR TC IN HTR 36,15.4 IN	1262.4	0.4	1.03
HTR TC IN HTR 02,15.6 IN	1333.8	0.6	1.32
HTR TC IN HTR 03,15.6 IN	1302.9	0.7	1.19
HTR TC IN HTR 06,15.6 IN	1373.1	0.7	1.47
HTR TC IN HTR 15,15.6 IN	1267.1	0.4	1.05
HTR TC IN HTR 24,15.6 IN	1289.9	0.4	1.14
HTR TC IN HTR 33,15.6 IN	1268.6	0.2	1.06
HTR TC IN HTR 34,15.6 IN	1262.6	0.9	1.03
HTR TC IN HTR 36,15.6 IN	1251.5	0.4	0.99
HTR TC IN HTR 03,15.9 IN	1278.2	0.6	1.10
HTR TC IN HTR 06,15.9 IN	1393.1	0.8	1.55
HTR TC IN HTR 15,15.9 IN	1256.5	0.8	1.01
HTR TC IN HTR 24,15.9 IN	1292.3	0.4	1.15
HTR TC IN HTR 33,15.9 IN	1264.5	0.3	1.04

Test 11, run 164 (continued)

INSTRUMENT	20-SEC AVG	STD DEV	NORMALIZED TEMP
HTR TC IN HTR 34,15.9 IN	1255.5	0.5	1.01
HTR TC IN HTR 36,15.9 IN	1247.8	0.4	0.98
HTR TC IN HTR 04,16.1 IN	1312.1	0.6	1.23
HTR TC IN HTR 05,16.1 IN	1307.7	0.6	1.21
HTR TC IN HTR 07,16.1 IN	1318.0	1.0	1.25
HTR TC IN HTR 21,16.1 IN	1271.5	0.6	1.07
HTR TC IN HTR 27,16.1 IN	1287.3	0.4	1.13
HTR TC IN HTR 04,16.4 IN	1315.3	1.1	1.24
HTR TC IN HTR 05,16.4 IN	1311.3	0.6	1.23
HTR TC IN HTR 07,16.4 IN	1318.4	0.5	1.26
HTR TC IN HTR 21,16.4 IN	1275.4	0.5	1.09
HTR TC IN HTR 27,16.4 IN	1292.3	0.4	1.15
HTR TC IN HTR 04,16.6 IN	1312.6	0.5	1.23
HTR TC IN HTR 05,16.6 IN	1317.7	0.5	1.25
HTR TC IN HTR 07,16.6 IN	1315.3	0.8	1.24
HTR TC IN HTR 21,16.6 IN	1284.5	0.5	1.12
HTR TC IN HTR 27,16.6 IN	1289.0	0.4	1.14
HTR TC IN HTR 04,16.9 IN	1278.5	0.5	1.10
HTR TC IN HTR 07,16.9 IN	1314.9	0.6	1.24
HTR TC IN HTR 21,16.9 IN	1283.7	0.5	1.12
HTR TC IN HTR 27,16.9 IN	1282.7	0.6	1.11
HTR TC IN HTR 11,18AB IN	1316.7	0.5	1.25
HTR TC IN HTR 12,18AB IN	1297.8	0.5	1.17
HTR TC IN HTR 14,18AB IN	1252.4	0.6	0.99
HTR TC IN HTR 30,18AB IN	1896.0	0.0	3.55
HTR TC IN HTR 11,18BC IN	1316.0	0.5	1.25
HTR TC IN HTR 12,18BC IN	1295.9	0.8	1.17
HTR TC IN HTR 14,18BC IN	1256.5	1.0	1.01
HTR TC IN HTR 17,18BC IN	1312.8	0.6	1.23
HTR TC IN HTR 30,18BC IN	1896.0	0.0	3.55
WIRE WRAP THERMOCOUPLES			
WW TC ON HTR 12,-1 IN(DEG F)	1006.5	0.4	0.02
WW TC ON HTR 16,-1 IN	1005.1	0.3	0.01
WW TC ON HTR 12,01 IN	1025.8	18.7	0.10
WW TC ON HTR 16,09 IN	1133.3	0.6	0.52
WW TC ON HTR 04,11 IN	1167.6	0.5	0.66
WW TC ON HTR 05,11 IN	1155.6	0.4	0.61
WW TC ON HTR 13,11 IN	1161.3	0.6	0.63
WW TC ON HTR 17,11 IN	1160.3	0.4	0.63
WW TC ON HTR 28,11 IN	1149.6	0.7	0.59
WW TC ON HTR 31,11 IN	1158.3	0.4	0.62
WW TC ON HTR 03,13 IN	1175.4	0.1	0.69
WW TC ON HTR 11,13 IN	1190.5	0.4	0.75
WW TC ON HTR 13,13 IN	1184.5	0.5	0.73
WW TC ON HTR 15,13 IN	1188.5	0.4	0.74
WW TC ON HTR 17,13 IN	1189.1	0.5	0.74
WW TC ON HTR 22,13 IN	1185.8	0.5	0.73
WW TC ON HTR 01,15 IN	1219.1	0.5	0.86
WW TC ON HTR 03,15 IN	1215.9	0.6	0.85

Test 11, run 164 (continued)

INSTRUMENT	20-SEC AVG	STD DEV	NORMALIZED TEMP
WW TC ON HTR 08,15 IN	1206.1	0.3	0.81
WW TC ON HTR 10,15 IN	1208.2	0.4	0.82
WW TC ON HTR 15,15 IN	1214.5	0.4	0.84
WW TC ON HTR 19,15 IN	1208.8	0.4	0.82
WW TC ON HTR 25,15 IN	1176.7	0.5	0.69
WW TC ON HTR 36,15 IN	1159.9	0.5	0.63
WW TC ON HTR 01,17 IN	1256.2	0.9	1.01
WW TC AJ HTR 02,17 IN	1236.3	0.5	0.93
WW TC OP HTR 02,17 IN	1245.7	0.5	0.97
WW TC ON HTR 08,17 IN	1228.6	0.3	0.90
WW TC ON HTR 10,17 IN	1230.4	0.5	0.91
WW TC ON HTR 11,17 IN	1225.0	0.5	0.89
WW TC ON HTR 18,17 IN	1231.1	0.5	0.91
WW TC ON HTR 19,17 IN	1228.7	0.4	0.90
WW TC ON HTR 21,17 IN	1236.2	0.5	0.93
WW TC ON HTR 22,17 IN	1236.6	0.5	0.93
WW TC ON HTR 33,17 IN	1186.4	0.5	0.73
WW TC ON HTR 37,17 IN	1208.2	0.5	0.82
WW TC ON HTR 06,19 IN	1295.9	0.7	1.17
WW TC AJ HTR 07,19 IN	1272.2	0.6	1.07
WW TC OP HTR 07,19 IN	1278.6	0.6	1.10
WW TC ON HTR 09,19 IN	1270.9	0.5	1.07
WW TC ON HTR 14,19 IN	1238.7	0.5	0.94
WW TC ON HTR 18,19 IN	1253.2	0.5	1.00
WW TC ON HTR 27,19 IN	1196.4	0.4	0.77
WW TC ON HTR 30,19 IN	1211.2	0.4	0.83
WW TC ON HTR 34,19 IN	1247.1	0.5	0.97
WW TC ON HTR 36,19 IN	1239.9	0.4	0.94
WW TC ON HTR 37,19 IN	1208.4	0.5	0.82
WW TC ON HTR 05,21 IN	1305.6	0.7	1.21
WW TC ON HTR 06,21 IN	1315.0	0.6	1.24
WW TC ON HTR 21,21 IN	1238.5	0.4	0.94
WW TC ON HTR 24,21 IN	1226.8	0.4	0.89
WW TC ON HTR 25,21 IN	1210.0	1.0	0.83
WW TC ON HTR 27,21 IN	1236.5	0.5	0.93
WW TC ON HTR 30,21 IN	1262.1	0.5	1.03
WW TC ON HTR 33,21 IN	1274.2	0.5	1.08
WW TC ON HTR 34,21 IN	1241.7	0.4	0.95
WW TC ON HTR 04,23 IN	1307.1	0.6	1.21
WW TC ON HTR 09,23 IN	1273.7	0.5	1.08
WW TC ON HTR 14,23 IN	1266.1	0.5	1.05
WW TC ON HTR 24,23 IN	1227.2	0.5	0.89
WW TC ON HTR 28,23 IN	1247.7	0.5	0.98
WW TC ON HTR 31,23 IN	1227.7	0.4	0.90
WW TC ON ROD 01,25 IN	1299.1	0.6	1.18
WW TC ON ROD 02,25 IN	1263.0	0.4	1.04
WW TC ON ROD 05,25 IN	1274.1	0.4	1.08
WW TC ON ROD 08,25 IN	1223.4	0.4	0.88
WW TC ON ROD 14,25 IN	1239.3	0.3	0.94
WW TC ON ROD 04,27 IN	1269.0	0.5	1.06
WW TC ON ROD 07,27 IN	1284.3	0.4	1.12

Test 11, run 164 (continued)

INSTRUMENT	20-SEC AVG	STD DEV	NORMALIZED TEMP
WW TC ON ROD 12,27 IN	1236.0	0.3	0.93
WW TC ON ROD 16,27 IN	1222.2	0.5	0.87
WW TC ON ROD 18,27 IN	1241.6	0.4	0.95
WW TC ON ROD 03,29 IN	1286.1	0.6	1.13
WW TC ON ROD 06,29 IN	1276.1	0.4	1.09
WW TC ON ROD 10,29 IN	1241.9	0.2	0.95
WW TC ON ROD 01,37 IN	1281.6	0.4	1.11
WW TC ON ROD 02,37 IN	1251.3	0.4	0.99
WW TC ON ROD 08,37 IN	1235.3	0.3	0.93
WW TC ON ROD 14,37 IN	1257.0	0.3	1.01
WW TC ON ROD 04,51 IN	1262.9	0.4	1.04
WW TC ON ROD 07,51 IN	1267.4	0.4	1.05
WW TC ON ROD 12,51 IN	1243.3	0.4	0.96
WW TC ON ROD 16,51 IN	1248.1	0.4	0.98
WW TC ON ROD 18,51 IN	1241.5	0.4	0.95
WW TC ON ROD 03,63 IN	1267.8	0.4	1.06
WW TC ON ROD 06,63 IN	1257.9	0.3	1.02
WW TC ON ROD 10,63 IN	1256.1	0.5	1.01
DUCT THERMOCOUPLES			
DUCT WALL TC,CH 38,19 IN(DEG F)	1174.1	0.4	0.68
DUCT WALL TC,CH 53,19 IN	1178.5	0.4	0.70
DUCT WALL TC,CH 28,21 IN	1206.5	0.4	0.81
DUCT WALL TC,CH 43,21 IN	1214.5	0.4	0.84
DUCT WALL TC,CH 44,21 IN	1209.1	0.4	0.82
TEST SECTION HOUSING THERMOCOUPLES			
TS SHELL-BOT(DEG F)	1007.5	4.2	
TS GUARD HTR-BOT	937.5	1.2	
TS HTR-BOT	858.5	0.4	
TS SHELL-LOW CTR	1197.8	0.2	
TS GUARD HTR-LOW CTR	1145.5	0.2	
TS HTR-LOW CTR	1002.5	0.5	
TS SHELL-UP CTR	1243.1	0.5	
TS GUARD HTR-UP CTR	1150.7	0.6	
TS HTR-UP CTR	1057.5	0.5	
TS SHELL-TOP	1250.7	0.4	
TS GUARD HTR-TOP	1180.3	0.3	
TS HTR-TOP	1083.0	1.4	
REFERENCE BOX THERMOCOUPLES			
150 DEG REF BOX 1(DEG F)	150.4	0.3	
150 DEG REF BOX 2	152.1	0.3	
150 DEG REF BOX 3	154.0	0.5	
150 DEG REF BOX 4	152.8	0.3	
150 DEG REF BOX 5	150.1	0.4	
MISCELLANEOUS			
SOD PUMP SPEED(RPM)	1716.9	29.5	
EXPANSION TANK LEVEL(% FULL)	69.0	0.1	

TEST SERIES 10(BUNDLE 3C); TEST 12 RUN 101 03/13/78 9 55 48

CONDITIONS:

TEST SECTION FLOW: 0.92 L/S (14.5 GPM)

TEST SECTION POWER

19 CENTRAL HEATERS:	101.1 KW (10.0 KW/M/ROD)	(3.0 KW/FT/ROD)
12 EDGE HEATERS:	63.6 KW (9.9 KW/M/ROD)	(3.0 KW/FT/ROD)
TOTAL(31 HEATERS):	164.7 KW	

TEST SECTION INLET TEMPERATURE: 442 DEG C (828 DEG F)

TEST SECTION OUTLET TEMPERATURE: 600 DEG C (1112 DEG F)

HEAT BALANCE:

HEAT INPUT FROM 31 FUEL PIN SIMULATORS:	164.7 KW
HEAT ABSORBED BY SODIUM= FLOW X SP.HEAT X (TS OUT TEMP - TS IN TEMP)	154.3 KW
% OF INPUT HEAT ACCOUNTED FOR:	93.7 %

INSTRUMENT	20-SEC AVG	STD DEV
HEATER POWER-CENTRAL RODS(KW)		
HTR POWER IN ROD 1	5.4	0.0
HTR POWER IN RODS 8,9,10	15.9	0.0
HTR POWER IN RODS 14,15,16	16.0	0.0
HTR POWER IN RODS 2,3,11,19	21.2	0.0
HTR POWER IN RODS 5,6,13,17	21.2	0.0
HTR POWER IN RODS 4,7,12,18	21.3	0.0
HEATER POWER-EDGE RODS(KW)		
HTR POWER IN RODS 30,31	10.8	0.0
HTR POWER IN RODS 24,25,27,28	21.2	0.0
HTR POWER IN RODS 33,34	10.6	0.0
HTR POWER IN RODS 21,22,36,37	21.1	0.0
FLOWS		
TEST SECTION(TS) FLOW IN(GPM)	14.5	0.1
TS FLOW OUT(GPM)	15.1	0.1
TS BYPASS FLOW(GPM)	-0.9	0.1
LOOP FLOW TOTAL(GPM)	14.1	0.2
RADIATOR AIR FLOW(CFM)	1.4	0.0
PRESSURES		
TS IN PRESS(PSIG)	14.2	0.1
TS OUT PRESS(PSIG)	5.9	0.1
PUMP OUT PRESS(PSIG)	9.2	0.0
TS LINE PRESS IN(PSIG)	13.3	0.1
EXP TANK ARGON PRESS(PSIG)	2.5	0.1
TS BYP LINE PRESS IN(PSIG)	14.5	0.1
TS BYP LINE PRESS OUT(PSIG)	6.3	0.1

Test 12, run 101 (continued)

INSTRUMENT	20-SEC AVG	STD DEV	NORMALIZED TEMP
LOOP THERMOCOUPLES			
TEST SECT INLET WELL(DEG F)	828.8	1.2	
TEST SECT OUTLET WELL(DEG F)	1112.3	0.5	
PUMP IN PIPE WALL TC	823.5	0.2	
PUMP OUT PIPE WALL TC	820.2	0.2	
RAD IN PIPE WALL TC	1065.4	0.2	
RAD OUT PIPE WALL TC	823.1	0.4	
HEATER INTERNAL THERMOCOUPLES			
HTR TC IN HTR 08,12AB IN(DEG F)	1034.5	0.4	0.73
HTR TC IN HTR 13,12AB IN	1025.8	0.4	0.69
HTR TC IN HTR 18,12AB IN	1015.9	0.5	0.66
HTR TC IN HTR 22,12AB IN	1029.8	0.3	0.71
HTR TC IN HTR 08,12BC IN	1032.8	0.4	0.72
HTR TC IN HTR 13,12BC IN	1026.4	0.4	0.70
HTR TC IN HTR 18,12BC IN	1016.6	0.7	0.66
HTR TC IN HTR 22,12BC IN	1028.0	0.4	0.70
HTR TC IN HTR 09,15AB IN	1094.5	0.4	0.94
HTR TC IN HTR 10,15AB IN	1082.8	0.3	0.90
HTR TC IN HTR 16,15BC IN	1059.0	0.4	0.81
HTR TC IN HTR 25,15BC IN	1060.2	0.4	0.82
HTR TC IN HTR 02,15.1 IN	1117.4	0.4	1.02
HTR TC IN HTR 03,15.1 IN	1136.1	0.6	1.08
HTR TC IN HTR 06,15.1 IN	1143.3	0.5	1.11
HTR TC IN HTR 15,15.1 IN	1111.0	0.4	1.00
HTR TC IN HTR 24,15.1 IN	1076.6	0.4	0.87
HTR TC IN HTR 33,15.1 IN	1071.1	0.3	0.85
HTR TC IN HTR 36,15.1 IN	1056.7	0.5	0.80
HTR TC IN HTR 02,15.4 IN	1138.0	0.4	1.09
HTR TC IN HTR 03,15.4 IN	1142.7	0.7	1.11
HTR TC IN HTR 06,15.4 IN	1145.2	0.5	1.12
HTR TC IN HTR 15,15.4 IN	1103.1	0.4	0.97
HTR TC IN HTR 24,15.4 IN	1082.5	0.3	0.89
HTR TC IN HTR 33,15.4 IN	1072.7	0.3	0.86
HTR TC IN HTR 34,15.4 IN	1072.7	3.2	0.86
HTR TC IN HTR 36,15.4 IN	1055.7	0.4	0.80
HTR TC IN HTR 02,15.6 IN	1137.2	0.4	1.09
HTR TC IN HTR 03,15.6 IN	1138.6	1.0	1.09
HTR TC IN HTR 06,15.6 IN	1166.1	0.6	1.19
HTR TC IN HTR 15,15.6 IN	1100.5	0.4	0.96
HTR TC IN HTR 24,15.6 IN	1079.3	0.5	0.88
HTR TC IN HTR 33,15.6 IN	1075.0	0.5	0.87
HTR TC IN HTR 34,15.6 IN	1068.2	1.9	0.84
HTR TC IN HTR 36,15.6 IN	1049.8	0.3	0.78
HTR TC IN HTR 03,15.9 IN	1105.8	0.8	0.98
HTR TC IN HTR 06,15.9 IN	1163.2	0.9	1.18
HTR TC IN HTR 15,15.9 IN	1091.6	0.4	0.93
HTR TC IN HTR 24,15.9 IN	1078.8	0.4	0.88
HTR TC IN HTR 33,15.9 IN	1070.5	0.4	0.85

Test 12, run 101 (continued)

INSTRUMENT	20-SEC AVG	STD DEV	NORMALIZED TEMP
HTR TC IN HTR 34,15.9 IN	1061.5	1.0	0.82
HTR TC IN HTR 36,15.9 IN	1047.0	0.5	0.77
HTR TC IN HTR 04,16.1 IN	1149.6	0.6	1.13
HTR TC IN HTR 05,16.1 IN	1147.1	0.5	1.12
HTR TC IN HTR 07,16.1 IN	1139.5	0.4	1.10
HTR TC IN HTR 21,16.1 IN	1069.6	0.6	0.85
HTR TC IN HTR 27,16.1 IN	1079.4	0.3	0.88
HTR TC IN HTR 04,16.4 IN	1151.5	0.5	1.14
HTR TC IN HTR 05,16.4 IN	1148.7	0.4	1.13
HTR TC IN HTR 07,16.4 IN	1139.3	0.5	1.09
HTR TC IN HTR 21,16.4 IN	1072.4	0.5	0.86
HTR TC IN HTR 27,16.4 IN	1082.3	0.4	0.89
HTR TC IN HTR 04,16.6 IN	1143.7	0.6	1.11
HTR TC IN HTR 05,16.6 IN	1145.8	0.5	1.12
HTR TC IN HTR 07,16.6 IN	1130.1	0.4	1.06
HTR TC IN HTR 21,16.6 IN	1079.7	0.5	0.88
HTR TC IN HTR 27,16.6 IN	1077.8	0.3	0.88
HTR TC IN HTR 04,16.9 IN	1140.9	0.6	1.10
HTR TC IN HTR 07,16.9 IN	1128.5	0.9	1.06
HTR TC IN HTR 21,16.9 IN	1080.0	0.6	0.89
HTR TC IN HTR 27,16.9 IN	1074.7	0.4	0.87
HTR TC IN HTR 11,18AB IN	1138.0	0.4	1.09
HTR TC IN HTR 12,18AB IN	1118.4	0.5	1.02
HTR TC IN HTR 14,18AB IN	1075.6	0.5	0.87
HTR TC IN HTR 30,18AB IN	1113.3	0.2	1.00
HTR TC IN HTR 11,18BC IN	1137.7	0.5	1.09
HTR TC IN HTR 12,18BC IN	1117.2	0.5	1.02
HTR TC IN HTR 14,18BC IN	1076.9	0.4	0.88
HTR TC IN HTR 17,18BC IN	1128.7	0.5	1.06
HTR TC IN HTR 30,18BC IN	1111.6	1.6	1.00
WIRE WRAP THERMOCOUPLES			
WW TC ON HTR 12,-1 IN(DEG F)	831.0	0.4	0.01
WW TC ON HTR 16,-1 IN	833.3	0.4	0.02
WW TC ON HTR 12,01 IN	851.7	3.3	0.08
WW TC ON HTR 16,09 IN	971.8	0.5	0.50
WW TC ON HTR 04,11 IN	1017.4	0.6	0.67
WW TC ON HTR 05,11 IN	1011.6	0.4	0.64
WW TC ON HTR 13,11 IN	1009.4	0.5	0.64
WW TC ON HTR 17,11 IN	1001.0	0.3	0.61
WW TC ON HTR 28,11 IN	992.6	0.4	0.58
WW TC ON HTR 31,11 IN	983.9	0.4	0.55
WW TC ON HTR 03,13 IN	1040.0	0.4	0.74
WW TC ON HTR 11,13 IN	1041.0	0.4	0.75
WW TC ON HTR 13,13 IN	1033.0	0.4	0.72
WW TC ON HTR 15,13 IN	1035.6	0.3	0.73
WW TC ON HTR 17,13 IN	1029.6	0.4	0.71
WW TC ON HTR 22,13 IN	1015.6	1.0	0.66
WW TC ON HTR 01,15 IN	1085.9	0.5	0.91
WW TC ON HTR 03,15 IN	1082.2	0.4	0.89

Test 12, run 101 (continued)

INSTRUMENT	20-SEC AVG	STD DEV	NORMALIZED TEMP
WW TC ON HTR 08,15 IN	1047.8	0.4	0.77
WW TC ON HTR 10,15 IN	1064.1	0.4	0.83
WW TC ON HTR 15,15 IN	1061.3	0.3	0.82
WW TC ON HTR 19,15 IN	1064.1	0.4	0.83
WW TC ON HTR 25,15 IN	1023.8	0.5	0.69
WW TC ON HTR 36,15 IN	1003.9	0.5	0.62
WW TC ON HTR 01,17 IN	1132.1	0.5	1.07
WW TC AJ HTR 02,17 IN	1108.1	0.5	0.99
WW TC OP HTR 02,17 IN	1119.2	0.4	1.02
WW TC ON HTR 08,17 IN	1078.7	0.3	0.88
WW TC ON HTR 10,17 IN	1085.1	0.4	0.90
WW TC ON HTR 11,17 IN	1081.4	0.5	0.89
WW TC ON HTR 18,17 IN	1088.7	0.4	0.92
WW TC ON HTR 19,17 IN	1082.4	0.4	0.89
WW TC ON HTR 21,17 IN	1070.1	0.8	0.85
WW TC ON HTR 22,17 IN	1075.8	0.5	0.87
WW TC ON HTR 33,17 IN	1033.6	0.5	0.72
WW TC ON HTR 37,17 IN	1050.3	0.4	0.78
WW TC ON HTR 06,19 IN	1159.4	0.4	1.17
WW TC AJ HTR 07,19 IN	1124.9	0.5	1.04
WW TC OP HTR 07,19 IN	1137.0	0.4	1.09
WW TC ON HTR 09,19 IN	1109.2	0.2	0.99
WW TC ON HTR 14,19 IN	1088.7	0.4	0.92
WW TC ON HTR 18,19 IN	1105.4	0.5	0.98
WW TC ON HTR 27,19 IN	1052.1	0.3	0.79
WW TC ON HTR 30,19 IN	1066.8	0.4	0.84
WW TC ON HTR 34,19 IN	1095.0	0.4	0.94
WW TC ON HTR 36,19 IN	1080.3	0.4	0.89
WW TC ON HTR 37,19 IN	1065.4	0.4	0.83
WW TC ON HTR 05,21 IN	1184.0	0.4	1.25
WW TC ON HTR 06,21 IN	1178.6	0.4	1.23
WW TC ON HTR 21,21 IN	1088.2	0.5	0.91
WW TC ON HTR 24,21 IN	1085.0	0.4	0.90
WW TC ON HTR 25,21 IN	1082.1	0.5	0.89
WW TC ON HTR 27,21 IN	1090.6	0.4	0.92
WW TC ON HTR 30,21 IN	1116.8	0.4	1.02
WW TC ON HTR 33,21 IN	1114.6	0.4	1.01
WW TC ON HTR 34,21 IN	1093.2	0.4	0.93
WW TC ON HTR 04,23 IN	1179.3	0.4	1.24
WW TC ON HTR 09,23 IN	1115.6	0.4	1.01
WW TC ON HTR 14,23 IN	1132.7	0.5	1.07
WW TC ON HTR 24,23 IN	1095.1	0.2	0.94
WW TC ON HTR 28,23 IN	1100.9	0.4	0.96
WW TC ON HTR 31,23 IN	1093.4	0.2	0.93
WW TC ON ROD 01,25 IN	1168.4	0.4	1.20
WW TC ON ROD 02,25 IN	1134.9	0.3	1.08
WW TC ON ROD 05,25 IN	1147.9	0.4	1.13
WW TC ON ROD 08,25 IN	1090.3	0.3	0.92
WW TC ON ROD 14,25 IN	1106.7	0.3	0.98
WW TC ON ROD 04,27 IN	1133.0	0.4	1.07
WW TC ON ROD 07,27 IN	1156.7	0.4	1.16

Test 12, run 101 (continued)

INSTRUMENT	20-SEC AVG	STD DEV	NORMALIZED TEMP
WW TC ON ROD 12,27 IN	1099.2	0.4	0.95
WW TC ON ROD 16,27 IN	1094.0	0.4	0.94
WW TC ON ROD 18,27 IN	1101.7	0.2	0.96
WW TC ON ROD 03,29 IN	1146.3	0.2	1.12
WW TC ON ROD 06,29 IN	1151.3	0.2	1.14
WW TC ON ROD 10,29 IN	1105.4	0.4	0.98
WW TC ON ROD 01,37 IN	1148.9	0.2	1.13
WW TC ON ROD 02,37 IN	1124.1	0.3	1.04
WW TC ON ROD 08,37 IN	1097.1	0.5	0.95
WW TC ON ROD 14,37 IN	1121.7	0.4	1.03
WW TC ON ROD 04,51 IN	1127.4	0.3	1.05
WW TC ON ROD 07,51 IN	1131.3	0.3	1.07
WW TC ON ROD 12,51 IN	1110.8	0.2	0.99
WW TC ON ROD 16,51 IN	1111.6	0.2	1.00
WW TC ON ROD 18,51 IN	1109.1	0.2	0.99
WW TC ON ROD 03,63 IN	1128.6	0.4	1.06
WW TC ON ROD 06,63 IN	1122.7	0.4	1.04
WW TC ON ROD 10,63 IN	1119.3	0.4	1.02
DUCT THERMOCOUPLES			
DUCT WALL TC,CH 38,19 IN(DEG F)	1042.1	0.3	0.75
DUCT WALL TC,CH 53,19 IN	1043.3	0.4	0.76
DUCT WALL TC,CH 28,21 IN	1068.2	0.4	0.84
DUCT WALL TC,CH 43,21 IN	1076.2	0.3	0.87
DUCT WALL TC,CH 44,21 IN	1075.3	0.1	0.87
TEST SECTION HOUSING THERMOCOUPLES			
TS SHELL-BOT(DEG F)	836.1	5.2	
TS GUARD HTR-BOT	822.7	1.6	
TS HTR-BOT	781.1	0.7	
TS SHELL-LOW CTR	1067.7	0.3	
TS GUARD HTR-LOW CTR	1040.8	0.3	
TS HTR-LOW CTR	930.6	1.1	
TS SHELL-UP CTR	1109.8	0.5	
TS GUARD HTR-UP CTR	1052.2	0.3	
TS HTR-UP CTR	982.4	0.4	
TS SHELL-TOP	1116.7	0.4	
TS GUARD HTR-TOP	1067.8	0.4	
TS HTR-TOP	1007.1	0.4	
REFERENCE BOX THERMOCOUPLES			
150 DEG REF BOX 1(DEG F)	150.6	0.3	
150 DEG REF BOX 2	152.1	0.3	
150 DEG REF BOX 3	154.5	0.4	
150 DEG REF BOX 4	152.8	0.3	
150 DEG REF BOX 5	151.1	0.3	
MISCELLANEOUS			
SOD PUMP SPEED(RPM)	625.4	16.8	
EXPANSION TANK LEVEL(% FULL)	74.2	0.2	

TEST SERIES 10(BUNDLE 3C); TEST 12 RUN 102 03/13/78 11 6 8

CONDITIONS:

TEST SECTION FLOW: 1.29 L/S (20.3 GPM)

TEST SECTION POWER

19 CENTRAL HEATERS: 142.7 KW (14.1 KW/M/ROD) (4.3 KW/FT/ROD)

12 EDGE HEATERS: 90.0 KW (14.1 KW/M/ROD) (4.3 KW/FT/ROD)

TOTAL(31 HEATERS): 232.7 KW

TEST SECTION INLET TEMPERATURE: 442 DEG C (828 DEG F)

TEST SECTION OUTLET TEMPERATURE: 603 DEG C (1118 DEG F)

HEAT BALANCE:

HEAT INPUT FROM 31 FUEL PIN SIMULATORS: 232.7 KW

HEAT ABSORBED BY SODIUM=

FLOW X SP.HEAT X (TS OUT TEMP - TS IN TEMP) 222.1 KW

% OF INPUT HEAT ACCOUNTED FOR: 95.4 %

INSTRUMENT	20-SEC AVG	STD DEV
HEATER POWER-CENTRAL RODS(KW)		
HTR POWER IN ROD 1	7.5	0.0
HTR POWER IN RODS 8,9,10	22.7	0.0
HTR POWER IN RODS 14,15,16	22.5	0.0
HTR POWER IN RODS 2,3,11,19	29.9	0.0
HTR POWER IN RODS 5,6,13,17	30.0	0.0
HTR POWER IN RODS 4,7,12,18	30.2	0.0
HEATER POWER-EDGE RODS(KW)		
HTR POWER IN RODS 30,31	15.1	0.0
HTR POWER IN RODS 24,25,27,28	30.0	0.0
HTR POWER IN RODS 33,34	15.0	0.0
HTR POWER IN RODS 21,22,36,37	29.9	0.0
FLOWS		
TEST SECTION(TS) FLOW IN(GPM)	20.3	0.1
TS FLOW OUT(GPM)	21.0	0.1
TS BYPASS FLOW(GPM)	-0.1	0.1
LOOP FLOW TOTAL(GPM)	19.9	0.2
RADIATOR AIR FLOW(CFM)	3.4	0.2
PRESSURES		
TS IN PRESS(PSIG)	17.7	0.1
TS OUT PRESS(PSIG)	5.9	0.0
PUMP OUT PRESS(PSIG)	12.8	0.1
TS LINE PRESS IN(PSIG)	16.8	0.1
EXP TANK ARGON PRESS(PSIG)	2.5	0.1
TS BYP LINE PRESS IN(PSIG)	17.9	0.1
TS BYP LINE PRESS OUT(PSIG)	6.4	0.1

Test 12, run 102 (continued)

INSTRUMENT	20-SEC AVG	STD DEV	NORMALIZED TEMP
LOOP THERMOCOUPLES			
TEST SECT INLET WELL(DEG F)	828.1	1.1	
TEST SECT OUTLET WELL(DEG F)	1118.0	0.4	
PUMP IN PIPE WALL TC	825.1	0.2	
PUMP OUT PIPE WALL TC	821.2	0.3	
RAD IN PIPE WALL TC	1054.7	0.3	
RAD OUT PIPE WALL TC	822.3	0.4	
HEATER INTERNAL THERMOCOUPLES			
HTR TC IN HTR 08,12AB IN(DEG F)	1050.5	0.3	0.77
HTR TC IN HTR 13,12AB IN	1039.7	0.4	0.73
HTR TC IN HTR 18,12AB IN	1034.0	0.3	0.71
HTR TC IN HTR 22,12AB IN	1045.7	0.3	0.75
HTR TC IN HTR 08,12BC IN	1047.9	0.4	0.76
HTR TC IN HTR 13,12BC IN	1040.6	0.3	0.73
HTR TC IN HTR 18,12BC IN	1034.7	0.3	0.71
HTR TC IN HTR 22,12BC IN	1043.2	0.3	0.74
HTR TC IN HTR 09,15AB IN	1113.0	0.4	0.98
HTR TC IN HTR 10,15AB IN	1100.3	0.5	0.94
HTR TC IN HTR 16,15BC IN	1075.7	0.4	0.85
HTR TC IN HTR 25,15BC IN	1073.8	0.4	0.85
HTR TC IN HTR 02,15.1 IN	1132.0	0.5	1.05
HTR TC IN HTR 03,15.1 IN	1152.5	0.5	1.12
HTR TC IN HTR 06,15.1 IN	1166.1	0.6	1.17
HTR TC IN HTR 15,15.1 IN	1128.4	0.4	1.04
HTR TC IN HTR 24,15.1 IN	1093.4	0.2	0.92
HTR TC IN HTR 33,15.1 IN	1086.2	0.4	0.89
HTR TC IN HTR 36,15.1 IN	1072.2	0.5	0.84
HTR TC IN HTR 02,15.4 IN	1163.0	0.6	1.15
HTR TC IN HTR 03,15.4 IN	1175.3	0.3	1.20
HTR TC IN HTR 06,15.4 IN	1170.1	0.7	1.18
HTR TC IN HTR 15,15.4 IN	1119.9	0.4	1.01
HTR TC IN HTR 24,15.4 IN	1100.9	0.3	0.94
HTR TC IN HTR 33,15.4 IN	1088.4	0.2	0.90
HTR TC IN HTR 34,15.4 IN	1088.0	1.2	0.90
HTR TC IN HTR 36,15.4 IN	1070.4	0.6	0.84
HTR TC IN HTR 02,15.6 IN	1162.1	0.3	1.15
HTR TC IN HTR 03,15.6 IN	1169.3	0.5	1.18
HTR TC IN HTR 06,15.6 IN	1191.5	0.5	1.25
HTR TC IN HTR 15,15.6 IN	1117.9	0.5	1.00
HTR TC IN HTR 24,15.6 IN	1097.7	0.3	0.93
HTR TC IN HTR 33,15.6 IN	1090.7	0.4	0.91
HTR TC IN HTR 34,15.6 IN	1082.0	0.5	0.88
HTR TC IN HTR 36,15.6 IN	1063.4	0.4	0.81
HTR TC IN HTR 03,15.9 IN	1122.8	0.5	1.02
HTR TC IN HTR 06,15.9 IN	1192.5	0.5	1.26
HTR TC IN HTR 15,15.9 IN	1105.2	0.4	0.96
HTR TC IN HTR 24,15.9 IN	1097.4	0.3	0.93
HTR TC IN HTR 33,15.9 IN	1086.0	0.2	0.89

Test 12, run 102 (continued)

INSTRUMENT	20-SEC AVG	STD DEV	NORMALIZED TEMP
HTR TC IN HTR 34,15.9 IN	1076.6	0.5	0.86
HTR TC IN HTR 36,15.9 IN	1059.9	0.5	0.80
HTR TC IN HTR 04,16.1 IN	1165.5	0.3	1.16
HTR TC IN HTR 05,16.1 IN	1162.4	0.4	1.15
HTR TC IN HTR 07,16.1 IN	1160.5	0.4	1.15
HTR TC IN HTR 21,16.1 IN	1085.9	0.5	0.89
HTR TC IN HTR 27,16.1 IN	1095.1	0.3	0.92
HTR TC IN HTR 04,16.4 IN	1167.0	0.3	1.17
HTR TC IN HTR 05,16.4 IN	1164.7	0.4	1.16
HTR TC IN HTR 07,16.4 IN	1161.2	0.3	1.15
HTR TC IN HTR 21,16.4 IN	1090.2	0.3	0.90
HTR TC IN HTR 27,16.4 IN	1098.6	0.3	0.93
HTR TC IN HTR 04,16.6 IN	1160.2	0.4	1.15
HTR TC IN HTR 05,16.6 IN	1166.1	0.4	1.17
HTR TC IN HTR 07,16.6 IN	1148.9	0.3	1.11
HTR TC IN HTR 21,16.6 IN	1099.1	0.4	0.93
HTR TC IN HTR 27,16.6 IN	1094.2	0.4	0.92
HTR TC IN HTR 04,16.9 IN	1157.4	0.4	1.14
HTR TC IN HTR 07,16.9 IN	1148.8	0.2	1.11
HTR TC IN HTR 21,16.9 IN	1098.6	0.4	0.93
HTR TC IN HTR 27,16.9 IN	1090.2	0.3	0.90
HTR TC IN HTR 11,18AB IN	1155.7	0.4	1.13
HTR TC IN HTR 12,18AB IN	1135.5	0.3	1.06
HTR TC IN HTR 14,18AB IN	1085.8	0.4	0.89
HTR TC IN HTR 30,18AB IN	1130.5	0.4	1.04
HTR TC IN HTR 11,18BC IN	1156.1	0.4	1.13
HTR TC IN HTR 12,18BC IN	1134.7	0.3	1.06
HTR TC IN HTR 14,18BC IN	1087.4	0.7	0.89
HTR TC IN HTR 17,18BC IN	1143.5	0.4	1.09
HTR TC IN HTR 30,18BC IN	1127.6	0.4	1.03
WIRE WRAP THERMOCOUPLES			
WW TC ON HTR 12,-1 IN(DEG F)	831.0	0.3	0.01
WW TC ON HTR 16,-1 IN	833.2	0.4	0.02
WW TC ON HTR 12,01 IN	853.6	3.1	0.09
WW TC ON HTR 16,09 IN	977.0	0.3	0.51
WW TC ON HTR 04,11 IN	1021.6	0.5	0.67
WW TC ON HTR 05,11 IN	1013.6	0.5	0.64
WW TC ON HTR 13,11 IN	1013.3	0.6	0.64
WW TC ON HTR 17,11 IN	1006.3	0.4	0.61
WW TC ON HTR 28,11 IN	997.8	0.3	0.59
WW TC ON HTR 31,11 IN	989.5	0.3	0.56
WW TC ON HTR 03,13 IN	1043.0	0.3	0.74
WW TC ON HTR 11,13 IN	1047.5	0.5	0.76
WW TC ON HTR 13,13 IN	1038.1	0.3	0.72
WW TC ON HTR 15,13 IN	1041.5	0.4	0.74
WW TC ON HTR 17,13 IN	1036.3	0.4	0.72
WW TC ON HTR 22,13 IN	1023.4	0.5	0.67
WW TC ON HTR 01,15 IN	1090.6	0.6	0.91
WW TC ON HTR 03,15 IN	1087.2	0.5	0.89

Test 12, run 102 (continued)

INSTRUMENT	20-SEC AVG	STD DEV	NORMALIZED TEMP
WW TC ON HTR 08,15 IN	1056.1	0.4	0.79
WW TC ON HTR 10,15 IN	1071.6	0.5	0.84
WW TC ON HTR 15,15 IN	1067.4	0.4	0.83
WW TC ON HTR 19,15 IN	1069.4	0.3	0.83
WW TC ON HTR 25,15 IN	1024.0	0.5	0.68
WW TC ON HTR 36,15 IN	1000.9	0.3	0.60
WW TC ON HTR 01,17 IN	1135.7	0.3	1.06
WW TC AJ HTR 02,17 IN	1112.0	0.6	0.98
WW TC OP HTR 02,17 IN	1121.9	0.4	1.01
WW TC ON HTR 08,17 IN	1086.4	0.5	0.89
WW TC ON HTR 10,17 IN	1092.9	0.5	0.91
WW TC ON HTR 11,17 IN	1086.0	0.4	0.89
WW TC ON HTR 18,17 IN	1093.4	0.3	0.92
WW TC ON HTR 19,17 IN	1086.4	0.4	0.89
WW TC ON HTR 21,17 IN	1079.8	0.4	0.87
WW TC ON HTR 22,17 IN	1086.3	0.4	0.89
WW TC ON HTR 33,17 IN	1033.5	0.6	0.71
WW TC ON HTR 37,17 IN	1054.5	0.4	0.78
WW TC ON HTR 06,19 IN	1171.1	0.5	1.18
WW TC AJ HTR 07,19 IN	1128.5	0.5	1.04
WW TC OP HTR 07,19 IN	1143.6	0.5	1.09
WW TC ON HTR 09,19 IN	1120.3	0.5	1.01
WW TC ON HTR 14,19 IN	1092.6	0.4	0.91
WW TC ON HTR 18,19 IN	1110.5	0.4	0.97
WW TC ON HTR 27,19 IN	1049.8	0.3	0.76
WW TC ON HTR 30,19 IN	1064.5	0.3	0.82
WW TC ON HTR 34,19 IN	1100.8	0.4	0.94
WW TC ON HTR 36,19 IN	1084.8	0.4	0.89
WW TC ON HTR 37,19 IN	1068.4	0.4	0.83
WW TC ON HTR 05,21 IN	1192.8	0.5	1.26
WW TC ON HTR 06,21 IN	1190.9	0.5	1.25
WW TC ON HTR 21,21 IN	1093.9	0.4	0.92
WW TC ON HTR 24,21 IN	1083.6	0.5	0.88
WW TC ON HTR 25,21 IN	1077.8	0.5	0.86
WW TC ON HTR 27,21 IN	1091.1	0.5	0.91
WW TC ON HTR 30,21 IN	1121.0	0.5	1.01
WW TC ON HTR 33,21 IN	1123.9	0.5	1.02
WW TC ON HTR 34,21 IN	1093.6	0.3	0.92
WW TC ON HTR 04,23 IN	1189.9	0.6	1.25
WW TC ON HTR 09,23 IN	1124.8	0.4	1.02
WW TC ON HTR 14,23 IN	1136.5	0.6	1.06
WW TC ON HTR 24,23 IN	1093.2	0.5	0.91
WW TC ON HTR 28,23 IN	1100.9	0.4	0.94
WW TC ON HTR 31,23 IN	1091.2	0.4	0.91
WW TC ON ROD 01,25 IN	1178.6	0.3	1.21
WW TC ON ROD 02,25 IN	1138.7	0.4	1.07
WW TC ON ROD 05,25 IN	1152.2	0.3	1.12
WW TC ON ROD 08,25 IN	1089.7	0.4	0.90
WW TC ON ROD 14,25 IN	1105.8	0.6	0.96
WW TC ON ROD 04,27 IN	1138.5	0.4	1.07
WW TC ON ROD 07,27 IN	1166.1	0.5	1.17

Test 12, run 102 (continued)

INSTRUMENT	20-SEC AVG	STD DEV	NORMALIZED TEMP
WW TC ON ROD 12,27 IN	1099.1	0.6	0.93
WW TC ON ROD 16,27 IN	1091.8	0.2	0.91
WW TC ON ROD 18,27 IN	1101.9	0.3	0.94
WW TC ON ROD 03,29 IN	1156.6	0.4	1.13
WW TC ON ROD 06,29 IN	1156.5	0.3	1.13
WW TC ON ROD 10,29 IN	1107.9	0.5	0.96
WW TC ON ROD 01,37 IN	1158.5	0.4	1.14
WW TC ON ROD 02,37 IN	1128.6	0.4	1.04
WW TC ON ROD 08,37 IN	1098.9	0.4	0.93
WW TC ON ROD 14,37 IN	1124.5	0.4	1.02
WW TC ON ROD 04,51 IN	1132.9	0.4	1.05
WW TC ON ROD 07,51 IN	1136.6	0.6	1.06
WW TC ON ROD 12,51 IN	1110.6	1.2	0.97
WW TC ON ROD 16,51 IN	1113.3	0.2	0.98
WW TC ON ROD 18,51 IN	1108.4	0.3	0.97
WW TC ON ROD 03,63 IN	1135.7	0.3	1.06
WW TC ON ROD 06,63 IN	1126.6	0.2	1.03
WW TC ON ROD 10,63 IN	1123.3	0.8	1.02
DUCT THERMOCOUPLES			
DUCT WALL TC,CH 38,19 IN(DEG F)	1036.6	0.3	0.72
DUCT WALL TC,CH 53,19 IN	1038.7	0.4	0.73
DUCT WALL TC,CH 28,21 IN	1068.6	0.2	0.83
DUCT WALL TC,CH 43,21 IN	1072.1	0.3	0.84
DUCT WALL TC,CH 44,21 IN	1072.1	0.3	0.84
TEST SECTION HOUSING THERMOCOUPLES			
TS SHELL-BOT(DEG F)	836.5	5.8	
TS GUARD HTR-BOT	829.3	0.8	
TS HTR-BOT	789.2	0.6	
TS SHELL-LOW CTR	1059.4	0.3	
TS GUARD HTR-LOW CTR	1042.8	0.4	
TS HTR-LOW CTR	940.0	0.6	
TS SHELL-UP CTR	1109.4	0.4	
TS GUARD HTR-UP CTR	1067.0	0.1	
TS HTR-UP CTR	1005.3	0.3	
TS SHELL-TOP	1118.9	0.3	
TS GUARD HTR-TOP	1081.1	0.3	
TS HTR-TOP	1033.1	0.3	
REFERENCE BOX THERMOCOUPLES			
150 DEG REF BOX 1(DEG F)	150.4	0.2	
150 DEG REF BOX 2	151.6	0.4	
150 DEG REF BOX 3	154.4	0.4	
150 DEG REF BOX 4	152.8	0.4	
150 DEG REF BOX 5	151.0	0.4	
MISCELLANEOUS			
SOD PUMP SPEED(RPM)	853.1	7.3	
EXPANSION TANK LEVEL(% FULL)	73.5	0.2	

TEST SERIES 1C(BUNDLE 3C); TEST 12 RUN 103 03/13/78 12 15 6

CONDITIONS:

TEST SECTION FLOW: 1.70 L/S (26.8 GPM)

TEST SECTION POWER

19 CENTRAL HEATERS:	205.0 KW	(20.2 KW/M/ROD)	(6.2 KW/FT/ROD)
12 EDGE HEATERS:	128.3 KW	(20.0 KW/M/ROD)	(6.1 KW/FT/ROD)
TOTAL(31 HEATERS):	333.3 KW		

TEST SECTION INLET TEMPERATURE: 473 DEG C (883 DEG F)

TEST SECTION OUTLET TEMPERATURE: 649 DEG C (1201 DEG F)

HEAT BALANCE:

HEAT INPUT FROM 31 FUEL PIN SIMULATORS: 333.3 KW

HEAT ABSORBED BY SODIUM=
FLOW X SP.HEAT X (TS OUT TEMP - TS IN TEMP) 317.5 KW

% OF INPUT HEAT ACCOUNTED FOR: 95.3 %

INSTRUMENT	20-SEC AVG	STD DEV
HEATER POWER-CENTRAL RODS(KW)		
HTR POWER IN ROD 1	10.8	0.0
HTR POWER IN RODS 8,9,10	32.5	0.0
HTR POWER IN RODS 14,15,16	32.3	0.0
HTR POWER IN RODS 2,3,11,19	43.1	0.0
HTR POWER IN RODS 5,6,13,17	43.2	0.0
HTR POWER IN RODS 4,7,12,18	43.2	0.0
HEATER POWER-EDGE RODS(KW)		
HTR POWER IN RODS 30,31	21.1	0.0
HTR POWER IN RODS 24,25,27,28	42.5	0.0
HTR POWER IN RODS 33,34	21.5	0.0
HTR POWER IN RODS 21,22,36,37	43.2	0.0
FLOWS		
TEST SECTION(TS) FLOW IN(GPM)	26.8	0.1
TS FLOW OUT(GPM)	27.7	0.1
TS BYPASS FLOW(GPM)	-0.1	0.2
LOOP FLOW TOTAL(GPM)	26.3	0.3
RADIATOR AIR FLOW(CFM)	10.9	0.6
PRESSURES		
TS IN PRESS(PSIG)	22.1	0.1
TS OUT PRESS(PSIG)	6.1	0.1
PUMP OUT PRESS(PSIG)	17.3	0.0
TS LINE PRESS IN(PSIG)	21.2	0.1
EXP TANK ARGON PRESS(PSIG)	2.6	0.1
TS BYP LINE PRESS IN(PSIG)	22.5	0.1
TS BYP LINE PRESS OUT(PSIG)	6.6	0.1

Test 12, run 103 (continued)

INSTRUMENT	20-SEC AVG	STD DEV	NORMALIZED TEMP
LOOP THERMOCOUPLES			
TEST SECT INLET WELL(DEG F)	883.6	0.6	
TEST SECT OUTLET WELL(DEG F)	1201.2	0.3	
PUMP IN PIPE WALL TC	879.2	0.4	
PUMP OUT PIPE WALL TC	876.5	0.2	
RAD IN PIPE WALL TC	1117.5	0.3	
RAD OUT PIPE WALL TC	877.8	0.4	
HEATER INTERNAL THERMOCOUPLES			
HTR TC IN HTR 08,12AB IN(DEG F)	1140.2	0.4	0.81
HTR TC IN HTR 13,12AB IN	1127.2	0.4	0.77
HTR TC IN HTR 18,12AB IN	1126.7	0.4	0.77
HTR TC IN HTR 22,12AB IN	1135.4	0.3	0.79
HTR TC IN HTR 08,12BC IN	1135.3	0.4	0.79
HTR TC IN HTR 13,12BC IN	1128.6	0.4	0.77
HTR TC IN HTR 18,12BC IN	1127.7	0.4	0.77
HTR TC IN HTR 22,12BC IN	1132.2	0.3	0.78
HTR TC IN HTR 09,15AB IN	1208.8	0.5	1.02
HTR TC IN HTR 10,15AB IN	1194.5	0.4	0.98
HTR TC IN HTR 16,15BC IN	1170.1	0.5	0.90
HTR TC IN HTR 25,15BC IN	1165.3	0.4	0.89
HTR TC IN HTR 02,15.1 IN	1232.0	0.6	1.10
HTR TC IN HTR 03,15.1 IN	1274.6	0.7	1.23
HTR TC IN HTR 06,15.1 IN	1268.7	0.5	1.21
HTR TC IN HTR 15,15.1 IN	1224.3	0.4	1.07
HTR TC IN HTR 24,15.1 IN	1186.5	0.4	0.95
HTR TC IN HTR 33,15.1 IN	1179.5	0.2	0.93
HTR TC IN HTR 36,15.1 IN	1167.0	0.3	0.89
HTR TC IN HTR 02,15.4 IN	1285.2	0.5	1.26
HTR TC IN HTR 03,15.4 IN	1297.0	0.7	1.30
HTR TC IN HTR 06,15.4 IN	1273.3	0.7	1.23
HTR TC IN HTR 15,15.4 IN	1212.7	0.3	1.04
HTR TC IN HTR 24,15.4 IN	1198.8	0.4	0.99
HTR TC IN HTR 33,15.4 IN	1181.8	0.3	0.94
HTR TC IN HTR 34,15.4 IN	1179.1	1.0	0.93
HTR TC IN HTR 36,15.4 IN	1165.3	0.3	0.89
HTR TC IN HTR 02,15.6 IN	1287.6	0.5	1.27
HTR TC IN HTR 03,15.6 IN	1289.7	0.5	1.28
HTR TC IN HTR 06,15.6 IN	1303.8	0.6	1.32
HTR TC IN HTR 15,15.6 IN	1208.7	0.5	1.02
HTR TC IN HTR 24,15.6 IN	1193.8	0.3	0.98
HTR TC IN HTR 33,15.6 IN	1184.0	0.4	0.95
HTR TC IN HTR 34,15.6 IN	1175.5	0.6	0.92
HTR TC IN HTR 36,15.6 IN	1156.3	0.2	0.86
HTR TC IN HTR 03,15.9 IN	1221.2	0.5	1.06
HTR TC IN HTR 06,15.9 IN	1304.5	0.5	1.33
HTR TC IN HTR 15,15.9 IN	1198.6	0.5	0.99
HTR TC IN HTR 24,15.9 IN	1194.5	0.3	0.98
HTR TC IN HTR 33,15.9 IN	1179.3	0.4	0.93

Test 12, run 103 (continued)

INSTRUMENT	20-SEC AVG	STD DEV	NORMALIZED TEMP
HTR TC IN HTR 34,15.9 IN	1168.6	0.5	0.90
HTR TC IN HTR 36,15.9 IN	1152.3	0.4	0.85
HTR TC IN HTR 04,16.1 IN	1269.8	0.6	1.22
HTR TC IN HTR 05,16.1 IN	1262.9	0.6	1.19
HTR TC IN HTR 07,16.1 IN	1264.3	0.5	1.20
HTR TC IN HTR 21,16.1 IN	1180.4	0.4	0.93
HTR TC IN HTR 27,16.1 IN	1191.7	0.4	0.97
HTR TC IN HTR 04,16.4 IN	1272.9	0.3	1.23
HTR TC IN HTR 05,16.4 IN	1266.4	0.4	1.21
HTR TC IN HTR 07,16.4 IN	1264.8	0.6	1.20
HTR TC IN HTR 21,16.4 IN	1185.3	0.5	0.95
HTR TC IN HTR 27,16.4 IN	1196.6	0.4	0.99
HTR TC IN HTR 04,16.6 IN	1267.3	0.5	1.21
HTR TC IN HTR 05,16.6 IN	1266.7	0.5	1.21
HTR TC IN HTR 07,16.6 IN	1254.4	0.5	1.17
HTR TC IN HTR 21,16.6 IN	1200.3	0.4	1.00
HTR TC IN HTR 27,16.6 IN	1191.6	0.4	0.97
HTR TC IN HTR 04,16.9 IN	1263.7	0.5	1.20
HTR TC IN HTR 07,16.9 IN	1252.0	0.6	1.16
HTR TC IN HTR 21,16.9 IN	1198.9	0.4	0.99
HTR TC IN HTR 27,16.9 IN	1186.8	0.4	0.95
HTR TC IN HTR 11,18AB IN	1262.8	0.5	1.19
HTR TC IN HTR 12,18AB IN	1235.9	0.4	1.11
HTR TC IN HTR 14,18AB IN	1175.6	0.4	0.92
HTR TC IN HTR 30,18AB IN	1228.5	0.2	1.09
HTR TC IN HTR 11,18BC IN	1262.5	0.7	1.19
HTR TC IN HTR 12,18BC IN	1234.7	0.5	1.11
HTR TC IN HTR 14,18BC IN	1178.1	0.5	0.93
HTR TC IN HTR 17,18BC IN	1241.9	0.1	1.13
HTR TC IN HTR 30,18BC IN	1224.2	0.4	1.07
WIRE WRAP THERMOCOUPLES			
WW TC ON HTR 12,-1 IN(DEG F)	886.7	0.4	0.01
WW TC ON HTR 16,-1 IN	889.0	0.4	0.02
WW TC ON HTR 12,01 IN	912.0	11.9	0.09
WW TC ON HTR 16,09 IN	1049.7	0.3	0.52
WW TC ON HTR 04,11 IN	1098.4	0.5	0.68
WW TC ON HTR 05,11 IN	1086.6	0.4	0.64
WW TC ON HTR 13,11 IN	1088.8	0.4	0.65
WW TC ON HTR 17,11 IN	1081.4	0.4	0.62
WW TC ON HTR 28,11 IN	1072.5	0.4	0.59
WW TC ON HTR 31,11 IN	1063.5	0.4	0.57
WW TC ON HTR 03,13 IN	1122.7	0.5	0.75
WW TC ON HTR 11,13 IN	1127.4	0.6	0.77
WW TC ON HTR 13,13 IN	1115.6	0.3	0.73
WW TC ON HTR 15,13 IN	1121.0	0.5	0.75
WW TC ON HTR 17,13 IN	1115.0	0.4	0.73
WW TC ON HTR 22,13 IN	1099.4	0.6	0.68
WW TC ON HTR 01,15 IN	1172.6	0.5	0.91
WW TC ON HTR 03,15 IN	1170.1	0.5	0.90

Test 12, run 103 (continued)

INSTRUMENT	20-SEC AVG	STD DEV	NORMALIZED TEMP
WW TC ON HTR 08,15 IN	1139.7	0.4	0.81
WW TC ON HTR 10,15 IN	1153.0	0.6	0.85
WW TC ON HTR 15,15 IN	1148.2	0.4	0.83
WW TC ON HTR 19,15 IN	1150.9	0.4	0.84
WW TC ON HTR 25,15 IN	1098.4	0.2	0.68
WW TC ON HTR 36,15 IN	1070.8	0.4	0.59
WW TC ON HTR 01,17 IN	1224.8	0.5	1.07
WW TC AJ HTR 02,17 IN	1198.6	0.6	0.99
WW TC OP HTR 02,17 IN	1206.8	0.6	1.02
WW TC ON HTR 08,17 IN	1171.3	0.4	0.91
WW TC ON HTR 10,17 IN	1177.8	0.6	0.93
WW TC ON HTR 11,17 IN	1168.4	0.5	0.90
WW TC ON HTR 18,17 IN	1177.8	0.3	0.93
WW TC ON HTR 19,17 IN	1166.3	0.4	0.89
WW TC ON HTR 21,17 IN	1168.2	0.5	0.90
WW TC ON HTR 22,17 IN	1171.9	0.4	0.91
WW TC ON HTR 33,17 IN	1105.6	0.5	0.70
WW TC ON HTR 37,17 IN	1131.0	0.4	0.78
WW TC ON HTR 06,19 IN	1263.3	0.5	1.20
WW TC AJ HTR 07,19 IN	1214.0	0.7	1.04
WW TC OP HTR 07,19 IN	1234.7	0.5	1.11
WW TC ON HTR 09,19 IN	1208.1	0.4	1.02
WW TC ON HTR 14,19 IN	1175.8	0.4	0.92
WW TC ON HTR 18,19 IN	1199.2	0.4	0.99
WW TC ON HTR 27,19 IN	1117.0	0.4	0.74
WW TC ON HTR 30,19 IN	1137.5	0.5	0.80
WW TC ON HTR 34,19 IN	1185.9	0.4	0.95
WW TC ON HTR 36,19 IN	1172.3	0.4	0.91
WW TC ON HTR 37,19 IN	1142.2	0.3	0.81
WW TC ON HTR 05,21 IN	1286.1	0.3	1.27
WW TC ON HTR 06,21 IN	1286.7	0.5	1.27
WW TC ON HTR 21,21 IN	1175.8	0.5	0.92
WW TC ON HTR 24,21 IN	1158.1	0.3	0.86
WW TC ON HTR 25,21 IN	1151.1	0.4	0.84
WW TC ON HTR 27,21 IN	1167.2	0.4	0.89
WW TC ON HTR 30,21 IN	1204.9	0.5	1.01
WW TC ON HTR 33,21 IN	1212.8	0.4	1.04
WW TC ON HTR 34,21 IN	1175.0	0.4	0.92
WW TC ON HTR 04,23 IN	1287.6	0.5	1.27
WW TC ON HTR 09,23 IN	1215.4	0.4	1.04
WW TC ON HTR 14,23 IN	1222.7	0.4	1.07
WW TC ON HTR 24,23 IN	1166.9	0.4	0.89
WW TC ON HTR 28,23 IN	1179.6	0.4	0.93
WW TC ON HTR 31,23 IN	1166.7	0.4	0.89
WW TC ON ROD 01,25 IN	1271.0	0.3	1.22
WW TC ON ROD 02,25 IN	1226.3	0.4	1.08
WW TC ON ROD 05,25 IN	1238.3	0.4	1.12
WW TC ON ROD 08,25 IN	1168.8	0.2	0.90
WW TC ON ROD 14,25 IN	1182.0	0.3	0.94
WW TC ON ROD 04,27 IN	1223.1	0.4	1.07
WW TC ON ROD 07,27 IN	1257.6	0.4	1.18

Test 12, run 103 (continued)

INSTRUMENT	20-SEC AVG	STD DEV	NORMALIZED TEMP
WW TC ON ROD 12,27 IN	1176.5	0.4	0.92
WW TC ON ROD 16,27 IN	1165.5	0.3	0.89
WW TC ON ROD 18,27 IN	1181.1	0.3	0.94
WW TC ON ROD 03,29 IN	1247.7	0.4	1.15
WW TC ON ROD 06,29 IN	1242.6	0.5	1.13
WW TC ON ROD 10,29 IN	1188.6	0.2	0.96
WW TC ON ROD 01,37 IN	1250.5	0.4	1.16
WW TC ON ROD 02,37 IN	1214.1	0.4	1.04
WW TC ON ROD 08,37 IN	1178.0	0.3	0.93
WW TC ON ROD 14,37 IN	1206.4	0.4	1.02
WW TC ON ROD 04,51 IN	1217.7	0.2	1.05
WW TC ON ROD 07,51 IN	1224.5	0.3	1.07
WW TC ON ROD 12,51 IN	1188.6	0.2	0.96
WW TC ON ROD 16,51 IN	1194.5	0.2	0.98
WW TC ON ROD 18,51 IN	1188.5	0.3	0.96
WW TC ON ROD 03,63 IN	1224.2	0.4	1.07
WW TC ON ROD 06,63 IN	1211.0	0.3	1.03
WW TC ON ROD 10,63 IN	1207.1	0.4	1.02
DUCT THERMOCOUPLES			
DUCT WALL TC,CH 38,19 IN(DEG F)	1102.4	0.3	0.69
DUCT WALL TC,CH 53,19 IN	1107.4	0.2	0.70
DUCT WALL TC,CH 28,21 IN	1141.1	0.4	0.81
DUCT WALL TC,CH 43,21 IN	1144.2	0.4	0.82
DUCT WALL TC,CH 44,21 IN	1144.0	0.3	0.82
TEST SECTION HOUSING THERMOCOUPLES			
TS SHELL-BOT(DEG F)	890.7	5.5	
TS GUARD HTR-BOT	859.4	0.7	
TS HTR-BOT	804.5	0.3	
TS SHELL-LOW CTR	1120.6	0.3	
TS GUARD HTR-LOW CTR	1086.8	0.3	
TS HTR-LOW CTR	961.5	0.4	
TS SHELL-UP CTR	1185.7	0.5	
TS GUARD HTR-UP CTR	1111.5	0.3	
TS HTR-UP CTR	1029.9	0.1	
TS SHELL-TOP	1197.9	0.3	
TS GUARD HTR-TOP	1138.9	0.3	
TS HTR-TOP	1057.9	0.4	
REFERENCE BOX THERMOCOUPLES			
150 DEG REF BOX 1(DEG F)	150.5	0.2	
150 DEG REF BOX 2	152.2	0.3	
150 DEG REF BOX 3	154.4	0.4	
150 DEG REF BOX 4	152.7	0.4	
150 DEG REF BOX 5	151.0	0.4	
MISCELLANEOUS			
SOD PUMP SPEED(RPM)	1082.1	8.9	
EXPANSION TANK LEVEL(% FULL)	71.7	0.2	

TEST SERIES 10(BUNDLE 3C); TEST 12 RUN 104 03/14/78 9 18 50

CONDITIONS:

TEST SECTION FLOW: 2.71 L/S (42.7 GPM)

TEST SECTION POWER

19 CENTRAL HEATERS: 167.7 KW (16.5 KW/M/ROD) (5.0 KW/FT/ROD)

12 EDGE HEATERS: 104.9 KW (16.4 KW/M/ROD) (5.0 KW/FT/ROD)

TOTAL(31 HEATERS): 272.7 KW

TEST SECTION INLET TEMPERATURE: 446 DEG C (835 DEG F)

TEST SECTION OUTLET TEMPERATURE: 537 DEG C (999 DEG F)

HEAT BALANCE:

HEAT INPUT FROM 31 FUEL PIN SIMULATORS: 272.7 KW

HEAT ABSORBED BY SODIUM=

FLOW X SP.HEAT X (TS OUT TEMP - TS IN TEMP) 265.0 KW

% OF INPUT HEAT ACCOUNTED FOR: 97.2 %

INSTRUMENT	20-SEC AVG	STD DEV
HEATER POWER-CENTRAL RODS(KW)		
HTR POWER IN ROD 1	8.8	0.0
HTR POWER IN RODS 8,9,10	26.5	0.0
HTR POWER IN RODS 14,15,16	26.4	0.0
HTR POWER IN RODS 2,3,11,19	35.2	0.0
HTR POWER IN RODS 5,6,13,17	35.4	0.0
HTR POWER IN RODS 4,7,12,18	35.3	0.0
HEATER POWER-EDGE RODS(KW)		
HTR POWER IN RODS 30,31	17.2	0.0
HTR POWER IN RODS 24,25,27,28	34.8	0.0
HTR POWER IN RODS 33,34	17.6	0.0
HTR POWER IN RODS 21,22,36,37	35.4	0.0
FLOWS		
TEST SECTION(TS) FLOW IN(GPM)	42.7	0.1
TS FLOW OUT(GPM)	43.2	0.2
TS BYPASS FLOW(GPM)	-0.5	0.1
LOOP FLOW TOTAL(GPM)	42.0	0.3
RADIATOR AIR FLOW(CFM)	9.7	0.6
PRESSURES		
TS IN PRESS(PSIG)	40.6	0.1
TS OUT PRESS(PSIG)	6.0	0.1
PUMP OUT PRESS(PSIG)	36.0	0.1
TS LINE PRESS IN(PSIG)	40.0	0.1
EXP TANK ARGON PRESS(PSIG)	2.6	0.1
TS BYP LINE PRESS IN(PSIG)	40.7	0.1
TS BYP LINE PRESS OUT(PSIG)	6.5	0.1

Test 12, run 104 (continued)

INSTRUMENT	20-SEC AVG	STD DEV	NORMALIZED TEMP
LOOP THERMOCOUPLES			
TEST SECT INLET WELL(DEG F)	835.1	0.4	
TEST SECT OUTLET WELL(DEG F)	999.7	0.5	
PUMP IN PIPE WALL TC	833.3	0.3	
PUMP OUT PIPE WALL TC	829.9	0.4	
RAD IN PIPE WALL TC	934.3	0.2	
RAD OUT PIPE WALL TC	831.6	0.3	
HEATER INTERNAL THERMOCOUPLES			
HTR TC IN HTR 08,12AB IN(DEG F)	986.0	0.4	0.92
HTR TC IN HTR 13,12AB IN	980.0	0.4	0.88
HTR TC IN HTR 18,12AB IN	983.5	0.4	0.90
HTR TC IN HTR 22,12AB IN	982.4	0.4	0.89
HTR TC IN HTR 08,12BC IN	982.5	0.4	0.90
HTR TC IN HTR 13,12BC IN	981.4	0.4	0.89
HTR TC IN HTR 18,12BC IN	983.7	0.3	0.90
HTR TC IN HTR 22,12BC IN	980.3	0.4	0.88
HTR TC IN HTR 09,15AB IN	1019.7	0.4	1.12
HTR TC IN HTR 10,15AB IN	1009.8	0.4	1.06
HTR TC IN HTR 16,15BC IN	999.3	0.3	1.00
HTR TC IN HTR 25,15BC IN	997.7	0.3	0.99
HTR TC IN HTR 02,15.1 IN	1029.2	0.5	1.18
HTR TC IN HTR 03,15.1 IN	1038.8	0.5	1.24
HTR TC IN HTR 06,15.1 IN	1036.8	0.5	1.22
HTR TC IN HTR 15,15.1 IN	1027.4	0.3	1.17
HTR TC IN HTR 24,15.1 IN	1006.9	0.2	1.04
HTR TC IN HTR 33,15.1 IN	1005.7	0.4	1.04
HTR TC IN HTR 36,15.1 IN	1002.5	0.3	1.02
HTR TC IN HTR 02,15.4 IN	1045.4	0.4	1.28
HTR TC IN HTR 03,15.4 IN	1046.5	0.3	1.28
HTR TC IN HTR 06,15.4 IN	1040.1	0.4	1.25
HTR TC IN HTR 15,15.4 IN	1018.7	0.5	1.12
HTR TC IN HTR 24,15.4 IN	1015.9	0.1	1.10
HTR TC IN HTR 33,15.4 IN	1007.5	0.3	1.05
HTR TC IN HTR 34,15.4 IN	1005.8	0.7	1.04
HTR TC IN HTR 36,15.4 IN	1001.3	0.4	1.01
HTR TC IN HTR 02,15.6 IN	1044.8	0.4	1.27
HTR TC IN HTR 03,15.6 IN	1044.6	0.4	1.27
HTR TC IN HTR 06,15.6 IN	1053.1	0.3	1.32
HTR TC IN HTR 15,15.6 IN	1017.3	0.4	1.11
HTR TC IN HTR 24,15.6 IN	1014.2	0.1	1.09
HTR TC IN HTR 33,15.6 IN	1008.5	0.2	1.05
HTR TC IN HTR 34,15.6 IN	1003.5	0.5	1.02
HTR TC IN HTR 36,15.6 IN	994.4	0.1	0.97
HTR TC IN HTR 03,15.9 IN	1023.7	0.5	1.15
HTR TC IN HTR 06,15.9 IN	1058.7	0.3	1.36
HTR TC IN HTR 15,15.9 IN	1011.1	0.3	1.07
HTR TC IN HTR 24,15.9 IN	1014.3	0.2	1.09
HTR TC IN HTR 33,15.9 IN	1006.2	0.4	1.04

Test 12, run 104 (continued)

INSTRUMENT	20-SEC AVG	STD DEV	NORMALIZED TEMP
HTR TC IN HTR 34,15.9 IN	1001.1	0.3	1.01
HTR TC IN HTR 36,15.9 IN	992.2	0.4	0.95
HTR TC IN HTR 04,16.1 IN	1043.1	0.1	1.26
HTR TC IN HTR 05,16.1 IN	1042.5	0.3	1.26
HTR TC IN HTR C7,16.1 IN	1042.0	0.4	1.26
HTR TC IN HTR 21,16.1 IN	1007.5	0.3	1.05
HTR TC IN HTR 27,16.1 IN	1013.3	0.3	1.08
HTR TC IN HTR 04,16.4 IN	1044.6	0.3	1.27
HTR TC IN HTR C5,16.4 IN	1043.1	0.2	1.26
HTR TC IN HTR C7,16.4 IN	1041.6	0.4	1.25
HTR TC IN HTR 21,16.4 IN	1010.7	0.4	1.07
HTR TC IN HTR 27,16.4 IN	1016.8	0.3	1.10
HTR TC IN HTR C4,16.6 IN	1043.1	0.1	1.26
HTR TC IN HTR 05,16.6 IN	1043.1	0.2	1.26
HTR TC IN HTR 07,16.6 IN	1034.0	0.2	1.21
HTR TC IN HTR 21,16.6 IN	1011.3	0.4	1.07
HTR TC IN HTR 27,16.6 IN	1012.0	0.4	1.07
HTR TC IN HTR 04,16.9 IN	1040.8	0.4	1.25
HTR TC IN HTR C7,16.9 IN	1033.8	0.4	1.21
HTR TC IN HTR 21,16.9 IN	1010.8	0.3	1.07
HTR TC IN HTR 27,16.9 IN	1009.1	0.3	1.06
HTR TC IN HTR 11,18AB IN	1039.6	0.4	1.24
HTR TC IN HTR 12,18AB IN	1030.1	0.4	1.18
HTR TC IN HTR 14,18AB IN	1002.7	0.3	1.02
HTR TC IN HTR 30,18AB IN	1037.5	0.3	1.23
HTR TC IN HTR 11,18BC IN	1039.9	0.4	1.24
HTR TC IN HTR 12,18BC IN	1029.9	0.2	1.18
HTR TC IN HTR 14,18BC IN	1004.0	0.5	1.03
HTR TC IN HTR 17,18BC IN	1035.7	0.2	1.22
HTR TC IN HTR 30,18BC IN	1029.3	0.4	1.18
WIRE WRAP THERMOCOUPLES			
WW TC ON HTR 12,-1 IN(DEG F)	836.9	0.4	0.01
WW TC ON HTR 16,-1 IN	839.0	0.4	0.02
WW TC ON HTR 12,01 IN	852.3	1.7	0.10
WW TC ON HTR 16,09 IN	925.9	0.4	0.55
WW TC ON HTR 04,11 IN	949.8	0.4	0.70
WW TC ON HTR 05,11 IN	940.9	0.2	0.64
WW TC ON HTR 13,11 IN	943.5	0.4	0.66
WW TC ON HTR 17,11 IN	940.6	0.4	0.64
WW TC ON HTR 28,11 IN	931.8	0.2	0.59
WW TC ON HTR 31,11 IN	933.5	0.3	0.60
WW TC ON HTR C3,13 IN	957.6	0.4	0.74
WW TC ON HTR 11,13 IN	964.3	0.4	0.78
WW TC ON HTR 13,13 IN	958.1	0.3	0.75
WW TC ON HTR 15,13 IN	960.8	0.4	0.76
WW TC ON HTR 17,13 IN	958.1	0.2	0.75
WW TC ON HTR 22,13 IN	950.6	0.4	0.70
WW TC ON HTR C1,15 IN	986.4	0.4	0.92
WW TC ON HTR 03,15 IN	979.5	0.3	0.88

Test 12, run 104 (continued)

INSTRUMENT	20-SEC AVG	STD DEV	NORMALIZED TEMP
WW TC ON HTR 08,15 IN	972.9	0.3	0.84
WW TC ON HTR 10,15 IN	973.1	0.4	0.84
WW TC ON HTR 15,15 IN	975.6	0.4	0.85
WW TC ON HTR 19,15 IN	975.5	0.4	0.85
WW TC ON HTR 25,15 IN	949.0	0.3	0.69
WW TC ON HTR 36,15 IN	930.1	0.2	0.58
WW TC ON HTR 01,17 IN	1003.0	0.4	1.02
WW TC AJ HTR 02,17 IN	994.3	0.5	0.97
WW TC OP HTR 02,17 IN	998.4	0.4	0.99
WW TC ON HTR 08,17 IN	983.9	0.4	0.90
WW TC ON HTR 10,17 IN	982.1	0.5	0.89
WW TC ON HTR 11,17 IN	983.2	0.5	0.90
WW TC ON HTR 18,17 IN	986.1	0.3	0.92
WW TC ON HTR 19,17 IN	985.2	0.4	0.91
WW TC ON HTR 21,17 IN	978.2	0.6	0.87
WW TC ON HTR 22,17 IN	988.0	0.3	0.93
WW TC ON HTR 33,17 IN	949.1	0.5	0.69
WW TC ON HTR 37,17 IN	966.5	0.3	0.80
WW TC ON HTR 06,19 IN	1029.7	0.4	1.18
WW TC AJ HTR 07,19 IN	1003.8	0.5	1.02
WW TC OP HTR 07,19 IN	1012.5	0.4	1.08
WW TC ON HTR 09,19 IN	997.1	0.3	0.98
WW TC ON HTR 14,19 IN	988.4	0.4	0.93
WW TC ON HTR 18,19 IN	1001.0	0.2	1.01
WW TC ON HTR 27,19 IN	956.9	0.4	0.74
WW TC ON HTR 30,19 IN	966.5	0.3	0.80
WW TC ON HTR 34,19 IN	992.4	0.4	0.96
WW TC ON HTR 36,19 IN	987.3	0.4	0.92
WW TC ON HTR 37,19 IN	968.0	0.3	0.81
WW TC ON HTR 05,21 IN	1043.5	0.4	1.27
WW TC ON HTR 06,21 IN	1040.9	0.4	1.25
WW TC ON HTR 21,21 IN	985.8	0.4	0.92
WW TC ON HTR 24,21 IN	977.2	0.3	0.86
WW TC ON HTR 25,21 IN	970.7	0.4	0.82
WW TC ON HTR 27,21 IN	983.8	0.4	0.90
WW TC ON HTR 30,21 IN	1002.7	0.3	1.02
WW TC ON HTR 33,21 IN	1009.4	0.4	1.06
WW TC ON HTR 34,21 IN	989.5	0.2	0.94
WW TC ON HTR 04,23 IN	1031.3	0.5	1.19
WW TC ON HTR 09,23 IN	1007.7	0.3	1.05
WW TC ON HTR 14,23 IN	1011.9	0.4	1.07
WW TC ON HTR 24,23 IN	980.3	0.3	0.88
WW TC ON HTR 28,23 IN	990.6	0.4	0.94
WW TC ON HTR 31,23 IN	981.3	0.3	0.89
WW TC ON ROD 01,25 IN	1034.9	0.2	1.21
WW TC ON ROD 02,25 IN	1012.3	0.4	1.08
WW TC ON ROD 05,25 IN	1023.2	0.2	1.14
WW TC ON ROD 08,25 IN	981.0	0.4	0.89
WW TC ON ROD 14,25 IN	994.5	0.3	0.97
WW TC ON ROD 04,27 IN	1010.9	0.1	1.07
WW TC ON ROD 07,27 IN	1028.2	0.3	1.17

Test 12, run 104 (continued)

INSTRUMENT	20-SEC AVG	STD DEV	NORMALIZED TEMP
WW TC ON ROD 12,27 IN	989.4	0.2	0.94
WW TC ON ROD 16,27 IN	979.2	0.4	0.88
WW TC ON ROD 18,27 IN	988.2	0.4	0.93
WW TC ON ROD C3,29 IN	1019.9	0.3	1.12
WW TC ON ROD C6,29 IN	1024.8	0.3	1.15
WW TC ON ROD 10,29 IN	991.5	0.4	0.95
WW TC ON ROD C1,37 IN	1023.2	0.3	1.14
WW TC ON ROD C2,37 IN	1002.2	0.4	1.02
WW TC ON ROD C8,37 IN	987.9	0.1	0.93
WW TC ON ROD 14,37 IN	1008.6	0.3	1.05
WW TC ON ROD C4,51 IN	1009.6	0.4	1.06
WW TC ON ROD C7,51 IN	1011.8	0.3	1.07
WW TC ON ROD 12,51 IN	994.9	0.4	0.97
WW TC ON ROD 16,51 IN	996.9	0.2	0.98
WW TC ON ROD 18,51 IN	992.1	0.3	0.95
WW TC ON ROD C3,63 IN	1010.9	0.2	1.07
WW TC ON ROD C6,63 IN	1004.0	0.4	1.03
WW TC ON ROD 10,63 IN	1002.4	0.4	1.02
DUCT THERMOCOUPLES			
DUCT WALL TC,CH 38,19 IN(DEG F)	943.5	0.3	0.66
DUCT WALL TC,CH 53,19 IN	947.6	0.3	0.68
DUCT WALL TC,CH 28,21 IN	963.9	0.1	0.78
DUCT WALL TC,CH 43,21 IN	965.9	0.4	0.79
DUCT WALL TC,CH 44,21 IN	968.1	0.2	0.81
TEST SECTION HOUSING THERMOCOUPLES			
TS SHELL-BOT(DEG F)	843.1	2.7	
TS GUARD HTR-BOT	819.4	0.6	
TS HTR-BOT	776.1	0.2	
TS SHELL-LOW CTR	955.9	0.3	
TS GUARD HTR-LOW CTR	921.9	0.2	
TS HTR-LOW CTR	797.0	0.3	
TS SHELL-UP CTR	993.0	0.4	
TS GUARD HTR-UP CTR	929.2	0.3	
TS HTR-UP CTR	860.1	0.3	
TS SHELL-TOP	1000.3	0.3	
TS GUARD HTR-TOP	963.8	0.3	
TS HTR-TOP	861.6	0.3	
REFERENCE BOX THERMOCOUPLES			
150 DEG REF BOX 1(DEG F)	150.5	0.3	
150 DEG REF BOX 2	152.2	0.3	
150 DEG REF BOX 3	154.0	0.4	
150 DEG REF BOX 4	152.9	0.3	
150 DEG REF BOX 5	150.9	0.4	
MISCELLANEOUS			
SOD PUMP SPEED(RPM)	1712.2	14.2	
EXPANSION TANK LEVEL(% FULL)	76.6	0.1	

TEST SERIES 10(BUNDLE 3C); TEST 12 RUN 105 03/14/78 10 2 59

CONDITIONS:

TEST SECTION FLOW: 3.67 L/S (58.0 GPM)

TEST SECTION POWER

19 CENTRAL HEATERS: 168.0 KW (16.6 KW/M/ROD) (5.1 KW/FT/ROD)

12 EDGE HEATERS: 105.1 KW (16.4 KW/M/ROD) (5.0 KW/FT/ROD)

TOTAL(31 HEATERS): 273.1 KW

TEST SECTION INLET TEMPERATURE: 445 DEG C (833 DEG F)

TEST SECTION OUTLET TEMPERATURE: 513 DEG C (955 DEG F)

HEAT BALANCE:

HEAT INPUT FROM 31 FUEL PIN SIMULATORS: 273.1 KW

HEAT ABSORBED BY SODIUM=

FLOW X SP.HEAT X (TS OUT TEMP - TS IN TEMP) 267.8 KW

% OF INPUT HEAT ACCOUNTED FOR: 98.1 %

INSTRUMENT	20-SEC AVG	STD DEV
HEATER POWER-CENTRAL RODS(KW)		
HTR POWER IN ROD 1	8.8	0.0
HTR POWER IN RODS 8,9,10	26.6	0.0
HTR POWER IN RODS 14,15,16	26.5	0.0
HTR POWER IN RODS 2,3,11,19	35.3	0.0
HTR POWER IN RODS 5,6,13,17	35.5	0.0
HTR POWER IN RODS 4,7,12,18	35.4	0.0
HEATER POWER-EDGE RODS(KW)		
HTR POWER IN RODS 30,31	17.2	0.0
HTR POWER IN RODS 24,25,27,28	34.9	0.0
HTR POWER IN RODS 33,34	17.6	0.0
HTR POWER IN RODS 21,22,36,37	35.4	0.0
FLOWS		
TEST SECTION(TS) FLOW IN(GPM)	58.0	0.1
TS FLOW OUT(GPM)	58.6	0.2
TS BYPASS FLOW(GPM)	0.3	0.1
LOOP FLOW TOTAL(GPM)	57.1	0.4
RADIATOR AIR FLOW(CFM)	11.3	0.6
PRESSURES		
TS IN PRESS(PSIG)	65.0	0.1
TS OUT PRESS(PSIG)	6.5	0.1
PUMP OUT PRESS(PSIG)	61.0	0.1
TS LINE PRESS IN(PSIG)	65.0	0.1
EXP TANK ARGON PRESS(PSIG)	3.1	0.1
TS BYP LINE PRESS IN(PSIG)	65.6	0.1
TS BYP LINE PRESS OUT(PSIG)	7.2	0.1

Test 12, run 105 (continued)

INSTRUMENT	20-SEC AVG	STD DEV	NORMALIZED TEMP
LOOP THERMOCOUPLES			
TEST SECT INLET WELL(DEG F)	833.5	0.6	
TEST SECT OUTLET WELL(DEG F)	956.0	0.4	
PUMP IN PIPE WALL TC	831.4	0.4	
PUMP OUT PIPE WALL TC	828.6	0.4	
RAD IN PIPE WALL TC	889.8	0.3	
RAD OUT PIPE WALL TC	830.7	0.4	
HEATER INTERNAL THERMOCOUPLES			
HTR TC IN HTR 08,12AB IN(DEG F)	958.2	0.2	1.02
HTR TC IN HTR 13,12AB IN	951.4	0.4	0.96
HTR TC IN HTR 18,12AB IN	957.0	0.4	1.01
HTR TC IN HTR 22,12AB IN	954.8	0.3	0.99
HTR TC IN HTR C8,12BC IN	954.5	0.4	0.99
HTR TC IN HTR 13,12BC IN	953.2	0.3	0.98
HTR TC IN HTR 18,12BC IN	957.3	0.3	1.01
HTR TC IN HTR 22,12BC IN	952.7	0.4	0.97
HTR TC IN HTR C9,15AB IN	982.3	0.5	1.21
HTR TC IN HTR 10,15AB IN	973.8	0.4	1.15
HTR TC IN HTR 16,15BC IN	966.4	0.3	1.08
HTR TC IN HTR 25,15BC IN	965.6	0.3	1.08
HTR TC IN HTR 02,15.1 IN	990.0	0.5	1.28
HTR TC IN HTR 03,15.1 IN	994.8	0.6	1.32
HTR TC IN HTR 06,15.1 IN	993.6	0.5	1.31
HTR TC IN HTR 15,15.1 IN	986.1	0.3	1.25
HTR TC IN HTR 24,15.1 IN	972.3	0.3	1.13
HTR TC IN HTR 33,15.1 IN	972.1	0.3	1.13
HTR TC IN HTR 36,15.1 IN	969.7	0.2	1.11
HTR TC IN HTR 02,15.4 IN	997.1	0.4	1.34
HTR TC IN HTR 03,15.4 IN	999.4	0.3	1.35
HTR TC IN HTR C6,15.4 IN	996.9	0.4	1.33
HTR TC IN HTR 15,15.4 IN	978.4	0.5	1.18
HTR TC IN HTR 24,15.4 IN	981.1	0.4	1.20
HTR TC IN HTR 33,15.4 IN	973.7	0.3	1.14
HTR TC IN HTR 34,15.4 IN	970.4	0.7	1.12
HTR TC IN HTR 36,15.4 IN	968.9	0.3	1.11
HTR TC IN HTR 02,15.6 IN	997.0	0.4	1.34
HTR TC IN HTR 03,15.6 IN	996.0	0.4	1.33
HTR TC IN HTR 06,15.6 IN	1008.3	0.3	1.43
HTR TC IN HTR 15,15.6 IN	977.0	0.3	1.17
HTR TC IN HTR 24,15.6 IN	979.9	0.4	1.20
HTR TC IN HTR 33,15.6 IN	973.9	0.3	1.15
HTR TC IN HTR 34,15.6 IN	970.8	0.5	1.12
HTR TC IN HTR 36,15.6 IN	963.2	0.2	1.06
HTR TC IN HTR 03,15.9 IN	983.5	0.5	1.22
HTR TC IN HTR 06,15.9 IN	1009.9	0.5	1.44
HTR TC IN HTR 15,15.9 IN	973.1	0.3	1.14
HTR TC IN HTR 24,15.9 IN	980.2	0.4	1.20
HTR TC IN HTR 33,15.9 IN	971.7	0.4	1.13

Test 12, run 105 (continued)

INSTRUMENT	20-SEC AVG	STD DEV	NORMALIZED TEMP
HTR TC IN HTR 34,15.9 IN	968.6	0.4	1.10
HTR TC IN HTR 36,15.9 IN	961.3	0.3	1.04
HTR TC IN HTR 04,16.1 IN	998.5	0.3	1.35
HTR TC IN HTR 05,16.1 IN	997.5	0.4	1.34
HTR TC IN HTR 07,16.1 IN	997.6	0.3	1.34
HTR TC IN HTR 21,16.1 IN	974.1	0.5	1.15
HTR TC IN HTR 27,16.1 IN	978.5	0.5	1.18
HTR TC IN HTR 04,16.4 IN	1000.0	0.4	1.36
HTR TC IN HTR 05,16.4 IN	998.3	0.4	1.35
HTR TC IN HTR 07,16.4 IN	997.4	0.4	1.34
HTR TC IN HTR 21,16.4 IN	977.0	0.3	1.17
HTR TC IN HTR 27,16.4 IN	981.7	0.4	1.21
HTR TC IN HTR 04,16.6 IN	999.4	0.3	1.35
HTR TC IN HTR 05,16.6 IN	998.4	0.4	1.35
HTR TC IN HTR 07,16.6 IN	991.7	0.6	1.29
HTR TC IN HTR 21,16.6 IN	976.3	0.3	1.17
HTR TC IN HTR 27,16.6 IN	979.2	0.4	1.19
HTR TC IN HTR 04,16.9 IN	997.6	0.3	1.34
HTR TC IN HTR 07,16.9 IN	991.7	0.4	1.29
HTR TC IN HTR 21,16.9 IN	976.1	0.4	1.16
HTR TC IN HTR 27,16.9 IN	976.4	0.4	1.17
HTR TC IN HTR 11,18AB IN	995.1	0.5	1.32
HTR TC IN HTR 12,18AB IN	988.3	0.5	1.26
HTR TC IN HTR 14,18AB IN	969.8	0.4	1.11
HTR TC IN HTR 30,18AB IN	999.5	0.2	1.35
HTR TC IN HTR 11,18BC IN	995.2	0.5	1.32
HTR TC IN HTR 12,18BC IN	987.8	0.2	1.26
HTR TC IN HTR 14,18BC IN	971.1	0.4	1.12
HTR TC IN HTR 17,18BC IN	992.0	0.2	1.29
HTR TC IN HTR 30,18BC IN	989.9	0.4	1.28
WIRE WRAP THERMCCOUPLES			
WW TC ON HTR 12,-1 IN(DEG F)	834.6	0.6	0.01
WW TC ON HTR 16,-1 IN	836.7	0.4	0.03
WW TC ON HTR 12,01 IN	848.6	30.3	0.12
WW TC ON HTR 16,09 IN	903.7	0.3	0.57
WW TC ON HTR 04,11 IN	920.6	0.5	0.71
WW TC ON HTR 05,11 IN	911.6	0.4	0.64
WW TC ON HTR 13,11 IN	915.1	0.3	0.67
WW TC ON HTR 17,11 IN	913.6	0.2	0.65
WW TC ON HTR 28,11 IN	906.5	0.4	0.60
WW TC ON HTR 31,11 IN	910.1	0.4	0.63
WW TC ON HTR 03,13 IN	923.7	0.4	0.74
WW TC ON HTR 11,13 IN	930.8	0.5	0.79
WW TC ON HTR 13,13 IN	926.1	0.4	0.76
WW TC ON HTR 15,13 IN	928.4	0.4	0.77
WW TC ON HTR 17,13 IN	927.4	0.4	0.77
WW TC ON HTR 22,13 IN	921.7	0.4	0.72
WW TC ON HTR 01,15 IN	946.0	0.5	0.92
WW TC ON HTR 03,15 IN	940.8	0.4	0.88

Test 12, run 105 (continued)

INSTRUMENT	20-SEC AVG	STD DEV	NORMALIZED TEMP
WW TC ON HTR 08,15 IN	938.1	0.4	0.85
WW TC ON HTR 10,15 IN	936.1	0.4	0.84
WW TC ON HTR 15,15 IN	939.7	0.4	0.87
WW TC ON HTR 19,15 IN	939.4	0.4	0.86
WW TC ON HTR 25,15 IN	919.6	0.4	0.70
WW TC ON HTR 36,15 IN	902.3	0.4	0.56
WW TC ON HTR 01,17 IN	956.9	0.5	1.01
WW TC AJ HTR 02,17 IN	949.4	0.5	0.95
WW TC OP HTR 02,17 IN	953.0	0.4	0.98
WW TC ON HTR 08,17 IN	943.8	0.4	0.90
WW TC ON HTR 10,17 IN	941.1	0.4	0.88
WW TC ON HTR 11,17 IN	943.4	0.4	0.90
WW TC ON HTR 18,17 IN	946.5	0.3	0.92
WW TC ON HTR 19,17 IN	947.2	0.4	0.93
WW TC ON HTR 21,17 IN	943.7	0.4	0.90
WW TC ON HTR 22,17 IN	950.1	0.4	0.95
WW TC ON HTR 33,17 IN	916.0	0.5	0.67
WW TC ON HTR 37,17 IN	933.5	0.3	0.82
WW TC ON HTR 06,19 IN	975.7	0.4	1.16
WW TC AJ HTR 07,19 IN	958.1	0.5	1.02
WW TC OP HTR 07,19 IN	963.8	0.3	1.06
WW TC ON HTR 09,19 IN	952.4	0.3	0.97
WW TC ON HTR 14,19 IN	947.7	0.5	0.93
WW TC ON HTR 18,19 IN	957.6	0.4	1.01
WW TC ON HTR 27,19 IN	923.2	0.4	0.73
WW TC ON HTR 30,19 IN	930.1	0.3	0.79
WW TC ON HTR 34,19 IN	951.5	0.5	0.96
WW TC ON HTR 36,19 IN	949.7	0.4	0.95
WW TC ON HTR 37,19 IN	935.0	0.3	0.83
WW TC ON HTR 05,21 IN	989.0	0.4	1.27
WW TC ON HTR 06,21 IN	985.2	0.4	1.24
WW TC ON HTR 21,21 IN	947.8	0.4	0.93
WW TC ON HTR 24,21 IN	940.0	0.3	0.87
WW TC ON HTR 25,21 IN	933.3	0.4	0.82
WW TC ON HTR 27,21 IN	943.9	0.4	0.90
WW TC ON HTR 30,21 IN	958.0	0.4	1.02
WW TC ON HTR 33,21 IN	965.1	0.5	1.07
WW TC ON HTR 34,21 IN	949.9	0.2	0.95
WW TC ON HTR 04,23 IN	976.3	0.4	1.17
WW TC ON HTR 09,23 IN	959.8	0.3	1.03
WW TC ON HTR 14,23 IN	964.1	0.4	1.07
WW TC ON HTR 24,23 IN	941.6	0.2	0.88
WW TC ON HTR 28,23 IN	951.9	0.5	0.97
WW TC ON HTR 31,23 IN	940.9	0.3	0.88
WW TC ON ROD 01,25 IN	980.6	0.4	1.20
WW TC ON ROD 02,25 IN	964.8	0.3	1.07
WW TC ON ROD 05,25 IN	973.9	0.3	1.15
WW TC ON ROD 08,25 IN	942.7	0.4	0.89
WW TC ON ROD 14,25 IN	953.9	0.3	0.98
WW TC ON ROD 04,27 IN	964.0	0.2	1.07
WW TC ON ROD 07,27 IN	977.1	0.1	1.17

Test 12, run 105 (continued)

INSTRUMENT	20-SEC AVG	STD DEV	NORMALIZED TEMP
WW TC ON ROD 12,27 IN	949.2	0.3	0.94
WW TC ON ROD 16,27 IN	939.1	0.2	0.86
WW TC ON ROD 18,27 IN	947.9	0.4	0.93
WW TC ON ROD 03,29 IN	971.2	0.4	1.12
WW TC ON ROD 06,29 IN	974.8	0.3	1.15
WW TC ON ROD 10,29 IN	950.0	0.3	0.95
WW TC ON ROD 01,37 IN	972.0	0.3	1.13
WW TC ON ROD 02,37 IN	956.5	0.2	1.00
WW TC ON ROD 08,37 IN	946.7	0.3	0.92
WW TC ON ROD 14,37 IN	963.9	0.2	1.06
WW TC ON ROD 04,51 IN	963.1	0.1	1.06
WW TC ON ROD 07,51 IN	964.5	0.4	1.07
WW TC ON ROD 12,51 IN	952.2	0.4	0.97
WW TC ON ROD 16,51 IN	954.9	0.1	0.99
WW TC ON ROD 18,51 IN	950.0	0.2	0.95
WW TC ON ROD 03,63 IN	964.3	0.4	1.07
WW TC ON ROD 06,63 IN	959.7	0.3	1.03
WW TC ON ROD 10,63 IN	957.6	0.4	1.01
DUCT THERMOCOUPLES			
DUCT WALL TC,CH 38,19 IN(DEG F)	911.1	0.2	0.63
DUCT WALL TC,CH 53,19 IN	914.2	0.4	0.66
DUCT WALL TC,CH 28,21 IN	927.0	0.3	0.76
DUCT WALL TC,CH 43,21 IN	927.8	0.3	0.77
DUCT WALL TC,CH 44,21 IN	928.5	0.1	0.78
TEST SECTION HOUSING THERMOCOUPLES			
TS SHELL-BOT(DEG F)	841.2	1.7	
TS GUARD HTR-BOT	820.1	0.6	
TS HTR-BOT	776.9	0.3	
TS SHELL-LOW CTR	916.0	0.3	
TS GUARD HTR-LOW CTR	898.0	0.2	
TS HTR-LOW CTR	794.0	0.5	
TS SHELL-UP CTR	951.3	0.5	
TS GUARD HTR-UP CTR	917.3	0.4	
TS HTR-UP CTR	866.7	0.4	
TS SHELL-TOP	957.3	0.3	
TS GUARD HTR-TOP	941.8	0.4	
TS HTR-TOP	871.8	0.4	
REFERENCE BOX THERMOCOUPLES			
150 DEG REF BOX 1(DEG F)	150.5	0.3	
150 DEG REF BOX 2	151.5	0.4	
150 DEG REF BOX 3	154.4	0.4	
150 DEG REF BOX 4	152.7	0.4	
150 DEG REF BOX 5	151.3	0.1	
MISCELLANEOUS			
SOD PUMP SPEED(RPM)	2293.4	24.1	
EXPANSION TANK LEVEL(% FULL)	77.9	0.2	

TEST SERIES 10(BUNDLE 3C); TEST 12 RUN 107 03/15/78 9 47 50

CONDITIONS:

TEST SECTION FLOW: 3.77 L/S (59.5 GPM)

TEST SECTION POWER

19 CENTRAL HEATERS: 249.3 KW (24.6 KW/M/ROD) (7.5 KW/FT/ROD)

12 EDGE HEATERS: 156.1 KW (24.4 KW/M/ROD) (7.4 KW/FT/ROD)

TOTAL(31 HEATERS): 405.4 KW

TEST SECTION INLET TEMPERATURE: 537 DEG C (999 DEG F)

TEST SECTION OUTLET TEMPERATURE: 637 DEG C (1179 DEG F)

HEAT BALANCE:

HEAT INPUT FROM 31 FUEL PIN SIMULATORS: 405.4 KW

HEAT ABSORBED BY SODIUM=

FLOW X SP.HEAT X (TS OUT TEMP - TS IN TEMP) 391.0 KW

% OF INPUT HEAT ACCOUNTED FOR: 96.5 %

INSTRUMENT	20-SEC AVG	STD DEV
HEATER POWER-CENTRAL RODS(KW)		
HTR POWER IN ROD 1	13.1	0.0
HTR POWER IN RODS 8,9,10	39.5	0.0
HTR POWER IN RODS 14,15,16	39.2	0.0
HTR POWER IN RODS 2,3,11,19	52.5	0.0
HTR POWER IN RODS 5,6,13,17	52.4	0.0
HTR POWER IN RODS 4,7,12,18	52.5	0.0
HEATER POWER-EDGE RODS(KW)		
HTR POWER IN RODS 30,31	25.5	0.0
HTR POWER IN RODS 24,25,27,28	51.8	0.0
HTR POWER IN RODS 33,34	26.1	0.0
HTR POWER IN RODS 21,22,36,37	52.7	0.0
FLOWS		
TEST SECTION(TS) FLOW IN(GPM)	59.5	0.1
TS FLOW OUT(GPM)	60.5	0.2
TS BYPASS FLOW(GPM)	-0.8	0.2
LOOP FLOW TOTAL(GPM)	58.4	0.4
RADIATOR AIR FLOW(CFM)	16.9	0.7
PRESSURES		
TS IN PRESS(PSIG)	62.1	0.1
TS OUT PRESS(PSIG)	7.0	0.1
PUMP OUT PRESS(PSIG)	59.4	0.1
TS LINE PRESS IN(PSIG)	62.7	0.1
EXP TANK ARGON PRESS(PSIG)	3.3	0.0
TS BYP LINE PRESS IN(PSIG)	63.6	0.1
TS BYP LINE PRESS OUT(PSIG)	7.2	0.1

Test 12, run 107 (continued)

INSTRUMENT	20-SEC AVG	STD DEV	NORMALIZED TEMP
LOOP THERMOCOUPLES			
TEST SECT INLET WELL(DEG F)	999.2	0.5	
TEST SECT OUTLET WELL(DEG F)	1179.3	0.4	
PUMP IN PIPE WALL TC	994.4	0.1	
PUMP OUT PIPE WALL TC	992.9	0.3	
RAD IN PIPE WALL TC	1086.9	0.2	
RAD OUT PIPE WALL TC	996.0	0.2	
HEATER INTERNAL THERMOCOUPLES			
HTR TC IN HTR 08,12AB IN(DEG F)	1180.4	0.3	1.01
HTR TC IN HTR 13,12AB IN	1169.3	0.4	0.94
HTR TC IN HTR 18,12AB IN	1182.2	0.3	1.02
HTR TC IN HTR 22,12AB IN	1175.2	0.3	0.98
HTR TC IN HTR 08,12BC IN	1173.8	0.3	0.97
HTR TC IN HTR 13,12BC IN	1171.1	0.3	0.95
HTR TC IN HTR 18,12BC IN	1183.0	0.3	1.02
HTR TC IN HTR 22,12BC IN	1172.2	0.3	0.96
HTR TC IN HTR 09,15AB IN	1215.5	0.4	1.20
HTR TC IN HTR 10,15AB IN	1207.0	0.4	1.15
HTR TC IN HTR 16,15BC IN	1196.6	0.4	1.10
HTR TC IN HTR 25,15BC IN	1193.1	0.4	1.08
HTR TC IN HTR 02,15.1 IN	1234.3	0.6	1.31
HTR TC IN HTR 03,15.1 IN	1239.3	0.6	1.33
HTR TC IN HTR 06,15.1 IN	1236.2	0.4	1.32
HTR TC IN HTR 15,15.1 IN	1225.1	0.4	1.25
HTR TC IN HTR 24,15.1 IN	1201.7	0.4	1.12
HTR TC IN HTR 33,15.1 IN	1201.3	0.3	1.12
HTR TC IN HTR 36,15.1 IN	1199.4	0.3	1.11
HTR TC IN HTR 02,15.4 IN	1240.3	0.4	1.34
HTR TC IN HTR 03,15.4 IN	1236.2	0.4	1.32
HTR TC IN HTR 06,15.4 IN	1241.1	0.3	1.34
HTR TC IN HTR 15,15.4 IN	1213.7	0.3	1.19
HTR TC IN HTR 24,15.4 IN	1216.9	0.1	1.21
HTR TC IN HTR 33,15.4 IN	1203.1	0.4	1.13
HTR TC IN HTR 34,15.4 IN	1198.1	0.7	1.10
HTR TC IN HTR 36,15.4 IN	1197.7	0.3	1.10
HTR TC IN HTR 02,15.6 IN	1240.1	0.5	1.34
HTR TC IN HTR 03,15.6 IN	1230.9	0.5	1.29
HTR TC IN HTR 06,15.6 IN	1253.5	0.3	1.41
HTR TC IN HTR 15,15.6 IN	1211.2	0.3	1.18
HTR TC IN HTR 24,15.6 IN	1213.6	0.2	1.19
HTR TC IN HTR 33,15.6 IN	1203.6	0.3	1.13
HTR TC IN HTR 34,15.6 IN	1198.9	0.4	1.11
HTR TC IN HTR 36,15.6 IN	1188.7	0.1	1.05
HTR TC IN HTR 03,15.9 IN	1221.9	0.6	1.24
HTR TC IN HTR 06,15.9 IN	1253.2	0.4	1.41
HTR TC IN HTR 15,15.9 IN	1206.2	0.3	1.15
HTR TC IN HTR 24,15.9 IN	1215.2	0.3	1.20
HTR TC IN HTR 33,15.9 IN	1199.5	0.2	1.11

Test 12, run 107 (continued)

INSTRUMENT	20-SEC AVG	STD DEV	NORMALIZED TEMP
HTR TC IN HTR 34,15.9 IN	1195.4	0.4	1.09
HTR TC IN HTR 36,15.9 IN	1185.6	0.4	1.03
HTR TC IN HTR 04,16.1 IN	1238.7	0.3	1.33
HTR TC IN HTR 05,16.1 IN	1239.6	0.4	1.33
HTR TC IN HTR 07,16.1 IN	1241.3	0.5	1.34
HTR TC IN HTR 21,16.1 IN	1207.3	0.5	1.16
HTR TC IN HTR 27,16.1 IN	1212.8	0.3	1.19
HTR TC IN HTR 04,16.4 IN	1241.1	0.3	1.34
HTR TC IN HTR 05,16.4 IN	1241.2	0.3	1.34
HTR TC IN HTR 07,16.4 IN	1241.9	0.2	1.35
HTR TC IN HTR 21,16.4 IN	1212.8	0.2	1.19
HTR TC IN HTR 27,16.4 IN	1217.8	0.2	1.21
HTR TC IN HTR 04,16.6 IN	1237.5	0.4	1.32
HTR TC IN HTR 05,16.6 IN	1240.2	0.3	1.34
HTR TC IN HTR 07,16.6 IN	1230.7	0.4	1.29
HTR TC IN HTR 21,16.6 IN	1214.5	0.3	1.20
HTR TC IN HTR 27,16.6 IN	1212.8	0.2	1.19
HTR TC IN HTR 04,16.9 IN	1235.0	0.4	1.31
HTR TC IN HTR 07,16.9 IN	1230.9	0.4	1.29
HTR TC IN HTR 21,16.9 IN	1212.6	0.4	1.18
HTR TC IN HTR 27,16.9 IN	1208.2	0.4	1.16
HTR TC IN HTR 11,18AB IN	1239.3	0.5	1.33
HTR TC IN HTR 12,18AB IN	1227.9	0.4	1.27
HTR TC IN HTR 14,18AB IN	1201.4	0.4	1.12
HTR TC IN HTR 30,18AB IN	1241.1	0.1	1.34
HTR TC IN HTR 11,18BC IN	1239.8	0.5	1.34
HTR TC IN HTR 12,18BC IN	1227.8	0.4	1.27
HTR TC IN HTR 14,18BC IN	1203.4	0.5	1.13
HTR TC IN HTR 17,18BC IN	1234.2	0.4	1.30
HTR TC IN HTR 30,18BC IN	1229.2	0.4	1.28
WIRE WRAP THERMCCOUPLES			
WW TC ON HTR 12,-1 IN(DEG F)	1001.1	0.4	0.01
WW TC ON HTR 16,-1 IN	1003.7	0.4	0.02
WW TC ON HTR 12,01 IN	1021.0	17.7	0.12
WW TC ON HTR 16,09 IN	1101.7	0.3	0.57
WW TC ON HTR 04,11 IN	1128.1	0.4	0.72
WW TC ON HTR 05,11 IN	1114.9	0.2	0.64
WW TC ON HTR 13,11 IN	1121.2	0.4	0.68
WW TC ON HTR 17,11 IN	1117.8	0.4	0.66
WW TC ON HTR 28,11 IN	1111.5	0.3	0.62
WW TC ON HTR 31,11 IN	1113.1	0.3	0.63
WW TC ON HTR 03,13 IN	1140.1	0.5	0.78
WW TC ON HTR 11,13 IN	1143.7	0.6	0.80
WW TC ON HTR 13,13 IN	1138.1	0.2	0.77
WW TC ON HTR 15,13 IN	1139.5	0.4	0.78
WW TC ON HTR 17,13 IN	1138.8	0.4	0.77
WW TC ON HTR 22,13 IN	1130.7	0.6	0.73
WW TC ON HTR 01,15 IN	1162.1	0.2	0.90
WW TC ON HTR 03,15 IN	1158.8	0.5	0.89

Test 12, run 107 (continued)

INSTRUMENT	20-SEC AVG	STD DEV	NORMALIZED TEMP
WW TC ON HTR 08,15 IN	1154.4	0.4	0.86
WW TC ON HTR 10,15 IN	1152.4	0.5	0.85
WW TC ON HTR 15,15 IN	1157.1	0.3	0.88
WW TC ON HTR 19,15 IN	1155.7	0.4	0.87
WW TC ON HTR 25,15 IN	1129.2	0.4	0.72
WW TC ON HTR 36,15 IN	1100.6	0.4	0.56
WW TC ON HTR 01,17 IN	1179.5	0.5	1.00
WW TC AJ HTR 02,17 IN	1171.8	0.6	0.96
WW TC OP HTR 02,17 IN	1178.7	0.4	1.00
WW TC ON HTR 08,17 IN	1165.1	0.4	0.92
WW TC ON HTR 10,17 IN	1161.4	0.5	0.90
WW TC ON HTR 11,17 IN	1162.8	0.6	0.91
WW TC ON HTR 18,17 IN	1168.8	0.3	0.94
WW TC ON HTR 19,17 IN	1169.7	0.4	0.95
WW TC ON HTR 21,17 IN	1168.2	0.5	0.94
WW TC ON HTR 22,17 IN	1171.4	0.4	0.96
WW TC ON HTR 33,17 IN	1121.8	0.5	0.68
WW TC ON HTR 37,17 IN	1147.0	0.4	0.82
WW TC ON HTR 06,19 IN	1216.8	0.4	1.21
WW TC AJ HTR 07,19 IN	1187.4	0.6	1.04
WW TC OP HTR 07,19 IN	1196.8	0.5	1.10
WW TC ON HTR 09,19 IN	1179.1	0.4	1.00
WW TC ON HTR 14,19 IN	1172.7	0.3	0.96
WW TC ON HTR 18,19 IN	1183.9	0.4	1.03
WW TC ON HTR 27,19 IN	1128.2	0.2	0.72
WW TC ON HTR 30,19 IN	1141.2	0.4	0.79
WW TC ON HTR 34,19 IN	1173.1	0.4	0.97
WW TC ON HTR 36,19 IN	1167.7	0.4	0.94
WW TC ON HTR 37,19 IN	1141.8	0.4	0.79
WW TC ON HTR 05,21 IN	1228.6	0.2	1.27
WW TC ON HTR 06,21 IN	1228.4	0.4	1.27
WW TC ON HTR 21,21 IN	1166.7	0.4	0.93
WW TC ON HTR 24,21 IN	1153.8	0.3	0.86
WW TC ON HTR 25,21 IN	1146.5	0.4	0.82
WW TC ON HTR 27,21 IN	1162.1	0.2	0.90
WW TC ON HTR 30,21 IN	1185.4	0.4	1.03
WW TC ON HTR 33,21 IN	1193.7	0.5	1.08
WW TC ON HTR 34,21 IN	1170.9	0.4	0.95
WW TC ON HTR 04,23 IN	1214.0	0.5	1.19
WW TC ON HTR 09,23 IN	1192.0	0.3	1.07
WW TC ON HTR 14,23 IN	1192.5	0.4	1.07
WW TC ON HTR 24,23 IN	1155.7	0.4	0.87
WW TC ON HTR 28,23 IN	1174.5	0.2	0.97
WW TC ON HTR 31,23 IN	1155.7	0.4	0.87
WW TC ON ROD 01,25 IN	1219.5	0.2	1.22
WW TC ON ROD 02,25 IN	1191.2	0.4	1.07
WW TC ON ROD 05,25 IN	1202.0	0.1	1.13
WW TC ON ROD 08,25 IN	1154.6	0.3	0.86
WW TC ON ROD 14,25 IN	1172.1	0.3	0.96
WW TC ON ROD 04,27 IN	1192.0	0.2	1.07
WW TC ON ROD 07,27 IN	1213.7	0.3	1.19

Test 12, run 107 (continued)

INSTRUMENT	20-SEC AVG	STD DEV	NORMALIZED TEMP
WW TC ON ROD 12,27 IN	1168.3	0.4	0.94
WW TC ON ROD 16,27 IN	1153.4	0.4	0.86
WW TC ON ROD 18,27 IN	1166.7	0.4	0.93
WW TC ON ROD 03,29 IN	1202.4	0.4	1.13
WW TC ON ROD 06,29 IN	1204.3	0.3	1.14
WW TC ON ROD 10,29 IN	1168.8	0.3	0.94
WW TC ON ROD 01,37 IN	1207.2	0.4	1.15
WW TC ON ROD 02,37 IN	1179.8	0.4	1.00
WW TC ON ROD 08,37 IN	1165.8	0.4	0.92
WW TC ON ROD 14,37 IN	1188.1	0.4	1.05
WW TC ON ROD 04,51 IN	1188.8	0.3	1.05
WW TC ON ROD 07,51 IN	1194.6	0.3	1.08
WW TC ON ROD 12,51 IN	1172.6	0.4	0.96
WW TC ON ROD 16,51 IN	1175.5	0.3	0.98
WW TC ON ROD 18,51 IN	1170.5	0.3	0.95
WW TC ON ROD 03,63 IN	1192.0	0.3	1.07
WW TC ON ROD 06,63 IN	1184.5	0.2	1.03
WW TC ON ROD 10,63 IN	1182.0	0.2	1.01
DUCT THERMOCOUPLES			
DUCT WALL TC,CH 38,19 IN(DEG F)	1114.5	0.4	0.64
DUCT WALL TC,CH 53,19 IN	1118.5	0.4	0.66
DUCT WALL TC,CH 28,21 IN	1137.3	0.2	0.77
DUCT WALL TC,CH 43,21 IN	1139.8	0.2	0.78
DUCT WALL TC,CH 44,21 IN	1137.2	0.3	0.77
TEST SECTION HOUSING THERMOCOUPLES			
TS SHELL-BOT(DEG F)	1006.2	3.0	
TS GUARD HTR-BOT	929.5	0.7	
TS HTR-BOT	846.4	0.5	
TS SHELL-LOW CTR	1108.4	0.2	
TS GUARD HTR-LOW CTR	1069.4	0.2	
TS HTR-LOW CTR	946.3	0.7	
TS SHELL-UP CTR	1167.3	0.4	
TS GUARD HTR-UP CTR	1082.3	0.4	
TS HTR-UP CTR	995.2	0.3	
TS SHELL-TOP	1176.7	0.4	
TS GUARD HTR-TOP	1109.2	0.2	
TS HTR-TOP	1020.9	0.3	
REFERENCE BOX THERMOCOUPLES			
150 DEG REF BOX 1(DEG F)	150.4	0.2	
150 DEG REF BOX 2	151.9	0.4	
150 DEG REF BOX 3	154.1	0.4	
150 DEG REF BOX 4	152.4	0.4	
150 DEG REF BOX 5	149.9	0.4	
MISCELLANEOUS			
SOD PUMP SPEED(RPM)	2270.1	30.7	
EXPANSION TANK LEVEL(% FULL)	73.4	0.1	

TEST SERIES 10(BUNDLE 3C); TEST 12 RUN 109 03/15/78 10 56 18

CONDITIONS:

TEST SECTION FLOW: 3.77 L/S (59.6 GPM)

TEST SECTION POWER

19 CENTRAL HEATERS: 285.3 KW (28.1 KW/M/ROD) (8.6 KW/FT/ROD)

12 EDGE HEATERS: 178.6 KW (27.9 KW/M/ROD) (8.5 KW/FT/ROD)

TOTAL(31 HEATERS): 464.0 KW

TEST SECTION INLET TEMPERATURE: 595 DEG C (1102 DEG F)

TEST SECTION OUTLET TEMPERATURE: 710 DEG C (1310 DEG F)

HEAT BALANCE:

HEAT INPUT FROM 31 FUEL PIN SIMULATORS: 464.0 KW

HEAT ABSORBED BY SODIUM=

FLOW X SP.HEAT X (TS OUT TEMP - TS IN TEMP) 443.5 KW

% OF INPUT HEAT ACCOUNTED FOR: 95.6 %

INSTRUMENT	20-SEC AVG	STD DEV
HEATER POWER-CENTRAL RODS(KW)		
HTR POWER IN ROD 1	15.0	0.0
HTR POWER IN RODS 8,9,10	45.3	0.0
HTR POWER IN RODS 14,15,16	44.9	0.0
HTR POWER IN RODS 2,3,11,19	60.1	0.0
HTR POWER IN RODS 5,6,13,17	60.0	0.0
HTR POWER IN RODS 4,7,12,18	60.0	0.0
HEATER POWER-EDGE RODS(KW)		
HTR POWER IN RODS 30,31	29.3	0.0
HTR POWER IN RODS 24,25,27,28	59.2	0.0
HTR POWER IN RODS 33,34	29.9	0.0
HTR POWER IN RODS 21,22,36,37	60.3	0.0
FLOWS		
TEST SECTION(TS) FLOW IN(GPM)	59.6	0.1
TS FLOW OUT(GPM)	60.9	0.2
TS BYPASS FLOW(GPM)	-0.5	0.1
LOOP FLOW TOTAL(GPM)	58.7	0.4
RADIATOR AIR FLOW(CFM)	16.6	0.8
PRESSURES		
TS IN PRESS(PSIG)	58.3	0.1
TS OUT PRESS(PSIG)	7.0	0.1
PUMP OUT PRESS(PSIG)	55.7	0.1
TS LINE PRESS IN(PSIG)	58.9	0.1
EXP TANK ARGON PRESS(PSIG)	3.5	0.1
TS BYP LINE PRESS IN(PSIG)	59.9	0.1
TS BYP LINE PRESS OUT(PSIG)	7.2	0.1

Test 12, run 109 (continued)

INSTRUMENT	20-SEC AVG	STD DEV	NORMALIZED TEMP
LOOP THERMOCOUPLES			
TEST SECT INLET WELL(DEG F)	1103.0	0.6	
TEST SECT OUTLET WELL(DEG F)	1310.3	0.4	
PUMP IN PIPE WALL TC	1098.2	0.4	
PUMP OUT PIPE WALL TC	1095.9	0.1	
RAD IN PIPE WALL TC	1208.0	0.4	
RAD OUT PIPE WALL TC	1099.1	0.3	
HEATER INTERNAL THERMOCOUPLES			
HTR TC IN HTR 08,12AB IN(DEG F)	1310.2	0.4	1.00
HTR TC IN HTR 13,12AB IN	1298.5	0.4	0.94
HTR TC IN HTR 18,12AB IN	1313.9	0.4	1.02
HTR TC IN HTR 22,12AB IN	1303.9	0.4	0.97
HTR TC IN HTR 08,12BC IN	1301.7	0.4	0.96
HTR TC IN HTR 13,12BC IN	1300.6	0.4	0.95
HTR TC IN HTR 18,12BC IN	1315.1	0.4	1.02
HTR TC IN HTR 22,12BC IN	1300.4	0.3	0.95
HTR TC IN HTR 09,15AB IN	1351.0	0.5	1.20
HTR TC IN HTR 10,15AB IN	1340.1	0.4	1.14
HTR TC IN HTR 16,15BC IN	1331.0	0.5	1.10
HTR TC IN HTR 25,15BC IN	1324.9	0.3	1.07
HTR TC IN HTR 02,15.1 IN	1376.5	0.6	1.32
HTR TC IN HTR 03,15.1 IN	1378.7	0.6	1.33
HTR TC IN HTR 06,15.1 IN	1376.1	0.4	1.32
HTR TC IN HTR 15,15.1 IN	1363.1	0.4	1.25
HTR TC IN HTR 24,15.1 IN	1335.3	0.4	1.12
HTR TC IN HTR 33,15.1 IN	1336.5	0.4	1.13
HTR TC IN HTR 36,15.1 IN	1334.2	0.4	1.12
HTR TC IN HTR 02,15.4 IN	1390.9	0.5	1.39
HTR TC IN HTR 03,15.4 IN	1373.1	0.6	1.30
HTR TC IN HTR 06,15.4 IN	1381.9	0.6	1.35
HTR TC IN HTR 15,15.4 IN	1348.9	0.5	1.19
HTR TC IN HTR 24,15.4 IN	1354.8	0.4	1.21
HTR TC IN HTR 33,15.4 IN	1338.9	0.4	1.14
HTR TC IN HTR 34,15.4 IN	1331.4	0.9	1.10
HTR TC IN HTR 36,15.4 IN	1332.7	0.4	1.11
HTR TC IN HTR 02,15.6 IN	1389.6	0.5	1.38
HTR TC IN HTR 03,15.6 IN	1367.4	0.6	1.28
HTR TC IN HTR 06,15.6 IN	1402.1	0.5	1.44
HTR TC IN HTR 15,15.6 IN	1345.2	0.3	1.17
HTR TC IN HTR 24,15.6 IN	1349.6	0.5	1.19
HTR TC IN HTR 33,15.6 IN	1338.2	0.3	1.13
HTR TC IN HTR 34,15.6 IN	1333.4	0.5	1.11
HTR TC IN HTR 36,15.6 IN	1322.3	0.1	1.06
HTR TC IN HTR 03,15.9 IN	1355.9	0.6	1.22
HTR TC IN HTR 06,15.9 IN	1401.1	0.4	1.44
HTR TC IN HTR 15,15.9 IN	1340.9	0.4	1.15
HTR TC IN HTR 24,15.9 IN	1352.8	0.3	1.21
HTR TC IN HTR 33,15.9 IN	1333.6	0.4	1.11

Test 12, run 109 (continued)

INSTRUMENT	20-SEC AVG	STD DEV	NORMALIZED TEMP
HTR TC IN HTR 34,15.9 IN	1329.2	0.5	1.09
HTR TC IN HTR 36,15.9 IN	1318.4	0.4	1.04
HTR TC IN HTR 04,16.1 IN	1380.5	0.3	1.34
HTR TC IN HTR 05,16.1 IN	1378.9	0.3	1.33
HTR TC IN HTR 07,16.1 IN	1383.5	0.7	1.35
HTR TC IN HTR 21,16.1 IN	1343.4	0.4	1.16
HTR TC IN HTR 27,16.1 IN	1349.4	0.2	1.19
HTR TC IN HTR 04,16.4 IN	1383.5	0.4	1.35
HTR TC IN HTR 05,16.4 IN	1380.7	0.3	1.34
HTR TC IN HTR 07,16.4 IN	1383.7	0.5	1.35
HTR TC IN HTR 21,16.4 IN	1349.3	0.1	1.19
HTR TC IN HTR 27,16.4 IN	1355.2	0.3	1.22
HTR TC IN HTR 04,16.6 IN	1378.0	0.6	1.33
HTR TC IN HTR 05,16.6 IN	1380.2	0.4	1.34
HTR TC IN HTR 07,16.6 IN	1370.4	0.3	1.29
HTR TC IN HTR 21,16.6 IN	1349.4	0.3	1.19
HTR TC IN HTR 27,16.6 IN	1347.3	0.4	1.18
HTR TC IN HTR 04,16.9 IN	1375.2	0.4	1.31
HTR TC IN HTR 07,16.9 IN	1370.0	0.5	1.29
HTR TC IN HTR 21,16.9 IN	1346.8	0.3	1.18
HTR TC IN HTR 27,16.9 IN	1341.7	0.2	1.15
HTR TC IN HTR 11,18AB IN	1379.9	0.5	1.34
HTR TC IN HTR 12,18AB IN	1366.8	0.4	1.27
HTR TC IN HTR 14,18AB IN	1338.5	0.4	1.14
HTR TC IN HTR 30,18AB IN	1379.9	0.3	1.34
HTR TC IN HTR 11,18BC IN	1380.1	0.5	1.34
HTR TC IN HTR 12,18BC IN	1366.7	0.5	1.27
HTR TC IN HTR 14,18BC IN	1341.0	0.5	1.15
HTR TC IN HTR 17,18BC IN	1373.6	0.4	1.31
HTR TC IN HTR 30,18BC IN	1368.3	0.4	1.28
WIRE WRAP THERMOCOUPLES			
WW TC ON HTR 12,-1 IN(DEG F)	1105.6	0.4	0.01
WW TC ON HTR 16,-1 IN	1108.1	0.4	0.02
WW TC ON HTR 12,01 IN	1125.1	0.4	0.11
WW TC ON HTR 16,09 IN	1220.6	0.4	0.57
WW TC ON HTR 04,11 IN	1251.1	0.4	0.71
WW TC ON HTR 05,11 IN	1234.5	0.2	0.63
WW TC ON HTR 13,11 IN	1243.1	0.6	0.68
WW TC ON HTR 17,11 IN	1238.7	0.3	0.65
WW TC ON HTR 28,11 IN	1230.0	0.4	0.61
WW TC ON HTR 31,11 IN	1232.6	0.3	0.63
WW TC ON HTR 03,13 IN	1263.4	0.5	0.77
WW TC ON HTR 11,13 IN	1268.7	0.5	0.80
WW TC ON HTR 13,13 IN	1262.2	0.4	0.77
WW TC ON HTR 15,13 IN	1265.4	0.4	0.78
WW TC ON HTR 17,13 IN	1263.2	0.4	0.77
WW TC ON HTR 22,13 IN	1253.9	0.6	0.73
WW TC ON HTR 01,15 IN	1289.7	0.3	0.90
WW TC ON HTR 03,15 IN	1285.8	0.5	0.88

Test 12, run 109 (continued)

INSTRUMENT	20-SEC AVG	STD DEV	NORMALIZED TEMP
WW TC ON HTR 08,15 IN	1280.0	0.5	0.85
WW TC ON HTR 10,15 IN	1279.6	0.5	0.85
WW TC ON HTR 15,15 IN	1285.1	0.4	0.88
WW TC ON HTR 19,15 IN	1282.3	0.4	0.87
WW TC ON HTR 25,15 IN	1252.3	0.4	0.72
WW TC ON HTR 36,15 IN	1217.0	0.4	0.55
WW TC ON HTR 01,17 IN	1313.6	0.4	1.02
WW TC AJ HTR 02,17 IN	1303.2	0.5	0.97
WW TC OP HTR 02,17 IN	1311.7	0.4	1.01
WW TC ON HTR 08,17 IN	1294.7	0.4	0.92
WW TC ON HTR 10,17 IN	1289.9	0.5	0.90
WW TC ON HTR 11,17 IN	1291.7	0.5	0.91
WW TC ON HTR 18,17 IN	1295.8	0.4	0.93
WW TC ON HTR 19,17 IN	1297.6	0.5	0.94
WW TC ON HTR 21,17 IN	1294.9	0.6	0.93
WW TC ON HTR 22,17 IN	1299.1	0.4	0.95
WW TC ON HTR 33,17 IN	1244.1	0.5	0.68
WW TC ON HTR 37,17 IN	1271.8	0.4	0.81
WW TC ON HTR 06,19 IN	1354.8	0.5	1.21
WW TC AJ HTR 07,19 IN	1322.8	0.7	1.06
WW TC OP HTR 07,19 IN	1335.4	0.4	1.12
WW TC ON HTR 09,19 IN	1313.7	0.5	1.02
WW TC ON HTR 14,19 IN	1301.8	0.5	0.96
WW TC ON HTR 18,19 IN	1314.0	0.4	1.02
WW TC ON HTR 27,19 IN	1245.9	0.4	0.69
WW TC ON HTR 30,19 IN	1264.2	0.4	0.78
WW TC ON HTR 34,19 IN	1304.2	0.4	0.97
WW TC ON HTR 36,19 IN	1295.3	0.3	0.93
WW TC ON HTR 37,19 IN	1265.8	0.4	0.79
WW TC ON HTR 05,21 IN	1368.5	0.4	1.28
WW TC ON HTR 06,21 IN	1367.8	0.4	1.28
WW TC ON HTR 21,21 IN	1293.2	0.4	0.92
WW TC ON HTR 24,21 IN	1277.2	0.4	0.84
WW TC ON HTR 25,21 IN	1268.9	0.5	0.80
WW TC ON HTR 27,21 IN	1291.5	0.4	0.91
WW TC ON HTR 30,21 IN	1316.9	0.4	1.03
WW TC ON HTR 33,21 IN	1328.9	0.5	1.09
WW TC ON HTR 34,21 IN	1301.9	0.4	0.96
WW TC ON HTR 04,23 IN	1354.7	0.5	1.21
WW TC ON HTR 09,23 IN	1329.1	0.4	1.09
WW TC ON HTR 14,23 IN	1326.4	0.4	1.08
WW TC ON HTR 24,23 IN	1281.2	0.2	0.86
WW TC ON HTR 28,23 IN	1299.3	0.5	0.95
WW TC ON HTR 31,23 IN	1281.2	0.3	0.86
WW TC ON ROD 01,25 IN	1357.7	0.4	1.23
WW TC ON ROD 02,25 IN	1322.2	0.3	1.06
WW TC ON ROD 05,25 IN	1335.8	0.1	1.12
WW TC ON ROD 08,25 IN	1282.0	0.2	0.86
WW TC ON ROD 14,25 IN	1299.5	0.4	0.95
WW TC ON ROD 04,27 IN	1326.0	0.4	1.08
WW TC ON ROD 07,27 IN	1348.5	0.2	1.18

Test 12, run 109 (continued)

INSTRUMENT	20-SEC AVG	STD DEV	NORMALIZED TEMP
WW TC ON ROD 12,27 IN	1295.5	0.1	0.93
WW TC ON ROD 16,27 IN	1280.2	0.3	0.85
WW TC ON ROD 18,27 IN	1295.3	0.3	0.93
WW TC ON ROD 03,29 IN	1339.4	0.4	1.14
WW TC ON ROD 06,29 IN	1337.7	0.3	1.13
WW TC ON ROD 10,29 IN	1295.9	0.5	0.93
WW TC ON ROD 01,37 IN	1344.4	0.4	1.16
WW TC ON ROD 02,37 IN	1312.4	0.4	1.01
WW TC ON ROD 08,37 IN	1295.9	0.5	0.93
WW TC ON ROD 14,37 IN	1315.6	0.3	1.03
WW TC ON ROD 04,51 IN	1321.0	0.4	1.05
WW TC ON ROD 07,51 IN	1328.4	0.3	1.09
WW TC ON ROD 12,51 IN	1300.4	0.3	0.95
WW TC ON ROD 16,51 IN	1307.0	0.4	0.98
WW TC ON ROD 18,51 IN	1301.6	0.4	0.96
WW TC ON ROD 03,63 IN	1327.1	0.5	1.08
WW TC ON ROD 06,63 IN	1317.3	0.3	1.03
WW TC ON ROD 10,63 IN	1312.7	0.4	1.01
DUCT THERMOCOUPLES			
DUCT WALL TC,CH 38,19 IN(DEG F)	1233.0	0.4	0.63
DUCT WALL TC,CH 53,19 IN	1241.1	0.2	0.67
DUCT WALL TC,CH 28,21 IN	1261.8	0.3	0.77
DUCT WALL TC,CH 43,21 IN	1264.0	0.4	0.78
DUCT WALL TC,CH 44,21 IN	1259.6	0.3	0.76
TEST SECTION HOUSING THERMOCOUPLES			
TS SHELL-BOT(DEG F)	1109.3	3.9	
TS GUARD HTR-BOT	1001.7	0.8	
TS HTR-BOT	900.8	0.5	
TS SHELL-LOW CTR	1222.2	0.4	
TS GUARD HTR-LOW CTR	1162.4	0.4	
TS HTR-LOW CTR	1011.9	0.6	
TS SHELL-UP CTR	1293.7	0.3	
TS GUARD HTR-UP CTR	1175.1	0.4	
TS HTR-UP CTR	1065.5	0.3	
TS SHELL-TOP	1305.0	0.4	
TS GUARD HTR-TOP	1214.8	0.4	
TS HTR-TOP	1090.9	0.4	
REFERENCE BOX THERMOCOUPLES			
150 DEG REF BOX 1(DEG F)	150.4	0.3	
150 DEG REF BOX 2	152.2	0.3	
150 DEG REF BOX 3	154.0	0.4	
150 DEG REF BOX 4	152.4	0.4	
150 DEG REF BOX 5	151.3	0.1	
MISCELLANEOUS			
SOD PUMP SPEED(RPM)	2205.9	32.7	
EXPANSION TANK LEVEL(% FULL)	69.9	0.1	

TEST SERIES 10(BUNDLE 3C); TEST 12 RUN 203 03/16/78 11 48 26

CONDITIONS:

TEST SECTION FLOW: 1.67 L/S (26.4 GPM)

TEST SECTION POWER

19 CENTRAL HEATERS:	205.4 KW	(20.3 KW/M/ROD)	(6.2 KW/FT/ROD)
12 EDGE HEATERS:	128.6 KW	(20.1 KW/M/ROD)	(6.1 KW/FT/ROD)
TOTAL(31 HEATERS):	334.0 KW		

TEST SECTION INLET TEMPERATURE: 476 DEG C (889 DEG F)

TEST SECTION OUTLET TEMPERATURE: 655 DEG C (1211 DEG F)

HEAT BALANCE:

HEAT INPUT FROM 31 FUEL PIN SIMULATORS: 334.0 KW

HEAT ABSORBED BY SODIUM=

FLOW X SP.HEAT X (TS OUT TEMP - TS IN TEMP) 317.0 KW

% OF INPUT HEAT ACCOUNTED FOR: 94.9 %

INSTRUMENT	20-SEC AVG	STD DEV
HEATER POWER-CENTRAL RODS(KW)		
HTR POWER IN ROD 1	10.8	0.0
HTR POWER IN RODS 8,9,10	32.5	0.0
HTR POWER IN RODS 14,15,16	32.4	0.0
HTR POWER IN RODS 2,3,11,19	43.1	0.0
HTR POWER IN RODS 5,6,13,17	43.3	0.0
HTR POWER IN RODS 4,7,12,18	43.2	0.0
HEATER POWER-EDGE RODS(KW)		
HTR POWER IN RODS 30,31	21.1	0.0
HTR POWER IN RODS 24,25,27,28	42.7	0.0
HTR POWER IN RODS 33,34	21.5	0.0
HTR POWER IN RODS 21,22,36,37	43.3	0.0
FLOWS		
TEST SECTION(TS) FLOW IN(GPM)	26.4	0.1
TS FLOW OUT(GPM)	27.5	0.1
TS BYPASS FLOW(GPM)	-1.0	0.2
LOOP FLOW TOTAL(GPM)	25.9	0.2
RADIATOR AIR FLOW(CFM)	10.2	0.4
PRESSURES		
TS IN PRESS(PSIG)	22.1	0.1
TS OUT PRESS(PSIG)	6.6	0.0
PUMP OUT PRESS(PSIG)	17.3	0.0
TS LINE PRESS IN(PSIG)	21.2	0.1
EXP TANK ARGON PRESS(PSIG)	3.1	0.1
TS BYP LINE PRESS IN(PSIG)	22.4	0.1
TS BYP LINE PRESS OUT(PSIG)	7.3	0.1

Test 12, run 203 (continued)

INSTRUMENT	20-SEC AVG	STD DEV	NORMALIZED TEMP
LOOP THERMOCOUPLES			
TEST SECT INLET WELL(DEG F)	889.6	0.6	
TEST SECT OUTLET WELL(DEG F)	1211.8	0.3	
PUMP IN PIPE WALL TC	885.9	0.4	
PUMP OUT PIPE WALL TC	883.2	0.3	
RAD IN PIPE WALL TC	1122.4	0.0	
RAD OUT PIPE WALL TC	884.3	0.4	
HEATER INTERNAL THERMOCOUPLES			
HTR TC IN HTR 08,12AB IN(DEG F)	1148.5	0.5	0.80
HTR TC IN HTR 13,12AB IN	1134.8	0.3	0.76
HTR TC IN HTR 18,12AB IN	1137.2	0.2	0.77
HTR TC IN HTR 22,12AB IN	1143.8	0.3	0.79
HTR TC IN HTR 08,12BC IN	1144.1	0.6	0.79
HTR TC IN HTR 13,12BC IN	1135.8	0.4	0.76
HTR TC IN HTR 18,12BC IN	1137.4	0.4	0.77
HTR TC IN HTR 22,12BC IN	1140.8	0.4	0.78
HTR TC IN HTR 09,15AB IN	1219.4	0.4	1.02
HTR TC IN HTR 10,15AB IN	1203.3	0.5	0.97
HTR TC IN HTR 16,15BC IN	1180.9	0.4	0.90
HTR TC IN HTR 25,15BC IN	1173.1	0.3	0.88
HTR TC IN HTR 02,15.1 IN	1250.1	0.6	1.12
HTR TC IN HTR 03,15.1 IN	1265.2	0.8	1.17
HTR TC IN HTR 06,15.1 IN	1280.1	0.5	1.21
HTR TC IN HTR 15,15.1 IN	1231.9	0.4	1.06
HTR TC IN HTR 24,15.1 IN	1194.5	0.3	0.95
HTR TC IN HTR 33,15.1 IN	1190.6	0.4	0.93
HTR TC IN HTR 36,15.1 IN	1179.0	0.4	0.90
HTR TC IN HTR 02,15.4 IN	1271.6	0.5	1.19
HTR TC IN HTR 03,15.4 IN	1263.4	0.5	1.16
HTR TC IN HTR 06,15.4 IN	1285.5	0.8	1.23
HTR TC IN HTR 15,15.4 IN	1220.8	0.4	1.03
HTR TC IN HTR 24,15.4 IN	1207.0	0.4	0.98
HTR TC IN HTR 33,15.4 IN	1193.2	0.4	0.94
HTR TC IN HTR 34,15.4 IN	1193.0	0.8	0.94
HTR TC IN HTR 36,15.4 IN	1177.0	0.4	0.89
HTR TC IN HTR 02,15.6 IN	1270.7	0.5	1.18
HTR TC IN HTR 03,15.6 IN	1255.4	0.3	1.14
HTR TC IN HTR 06,15.6 IN	1306.4	0.6	1.29
HTR TC IN HTR 15,15.6 IN	1216.6	0.5	1.01
HTR TC IN HTR 24,15.6 IN	1202.0	0.2	0.97
HTR TC IN HTR 33,15.6 IN	1195.5	0.4	0.95
HTR TC IN HTR 34,15.6 IN	1186.7	0.5	0.92
HTR TC IN HTR 36,15.6 IN	1166.6	0.4	0.86
HTR TC IN HTR 03,15.9 IN	1227.9	0.4	1.05
HTR TC IN HTR 06,15.9 IN	1305.0	0.4	1.29
HTR TC IN HTR 15,15.9 IN	1209.0	0.5	0.99
HTR TC IN HTR 24,15.9 IN	1202.5	0.5	0.97
HTR TC IN HTR 33,15.9 IN	1191.0	0.3	0.94

Test 12, run 203 (continued)

INSTRUMENT	20-SEC AVG	STD DEV	NORMALIZED TEMP
HTR TC IN HTR 34,15.9 IN	1181.1	0.5	0.90
HTR TC IN HTR 36,15.9 IN	1162.2	0.3	0.85
HTR TC IN HTR 04,16.1 IN	1279.4	0.5	1.21
HTR TC IN HTR 05,16.1 IN	1274.0	0.5	1.19
HTR TC IN HTR 07,16.1 IN	1277.0	0.5	1.20
HTR TC IN HTR 21,16.1 IN	1198.3	0.5	0.96
HTR TC IN HTR 27,16.1 IN	1204.4	0.3	0.98
HTR TC IN HTR 04,16.4 IN	1280.9	0.5	1.21
HTR TC IN HTR 05,16.4 IN	1276.3	0.4	1.20
HTR TC IN HTR 07,16.4 IN	1277.3	0.7	1.20
HTR TC IN HTR 21,16.4 IN	1202.1	0.4	0.97
HTR TC IN HTR 27,16.4 IN	1209.4	0.2	0.99
HTR TC IN HTR 04,16.6 IN	1268.7	0.2	1.18
HTR TC IN HTR 05,16.6 IN	1275.5	0.4	1.20
HTR TC IN HTR 07,16.6 IN	1260.4	0.4	1.15
HTR TC IN HTR 21,16.6 IN	1198.5	0.3	0.96
HTR TC IN HTR 27,16.6 IN	1201.2	0.3	0.97
HTR TC IN HTR 04,16.9 IN	1263.4	0.5	1.16
HTR TC IN HTR 07,16.9 IN	1259.3	0.7	1.15
HTR TC IN HTR 21,16.9 IN	1197.0	0.4	0.95
HTR TC IN HTR 27,16.9 IN	1195.7	0.4	0.95
HTR TC IN HTR 11,18AB IN	1268.1	0.4	1.17
HTR TC IN HTR 12,18AB IN	1247.8	0.4	1.11
HTR TC IN HTR 14,18AB IN	1188.7	0.3	0.93
HTR TC IN HTR 30,18AB IN	1240.8	0.4	1.09
HTR TC IN HTR 11,18BC IN	1268.0	0.6	1.17
HTR TC IN HTR 12,18BC IN	1246.5	0.5	1.11
HTR TC IN HTR 14,18BC IN	1191.6	0.5	0.94
HTR TC IN HTR 17,18BC IN	1261.8	0.3	1.15
HTR TC IN HTR 30,18BC IN	1236.1	0.2	1.08
WIRE WRAP THERMOCOUPLES			
WW TC ON HTR 12,-1 IN(DEG F)	892.3	0.4	0.01
WW TC ON HTR 16,-1 IN	895.1	0.5	0.02
WW TC ON HTR 12,01 IN	918.5	0.3	0.09
WW TC ON HTR 16,09 IN	1059.4	0.4	0.53
WW TC ON HTR 04,11 IN	1109.2	0.4	0.68
WW TC ON HTR 05,11 IN	1095.9	0.1	0.64
WW TC ON HTR 13,11 IN	1099.2	0.4	0.65
WW TC ON HTR 17,11 IN	1092.1	0.4	0.63
WW TC ON HTR 28,11 IN	1082.5	0.3	0.60
WW TC ON HTR 31,11 IN	1072.0	0.3	0.57
WW TC ON HTR 03,13 IN	1128.1	0.5	0.74
WW TC ON HTR 11,13 IN	1138.1	0.6	0.77
WW TC ON HTR 13,13 IN	1126.7	0.4	0.74
WW TC ON HTR 15,13 IN	1131.9	0.4	0.75
WW TC ON HTR 17,13 IN	1126.0	0.5	0.73
WW TC ON HTR 22,13 IN	1109.1	0.5	0.68
WW TC ON HTR 01,15 IN	1181.0	0.4	0.90
WW TC ON HTR 03,15 IN	1179.7	0.5	0.90

Test 12, run 203 (continued)

INSTRUMENT	20-SEC AVG	STD DEV	NORMALIZED TEMP
WW TC ON HTR 08,15 IN	1150.2	0.5	0.81
WW TC ON HTR 10,15 IN	1162.3	0.5	0.85
WW TC ON HTR 15,15 IN	1160.1	0.4	0.84
WW TC ON HTR 19,15 IN	1161.9	0.4	0.85
WW TC ON HTR 25,15 IN	1101.6	0.3	0.66
WW TC ON HTR 36,15 IN	1080.5	0.4	0.59
WW TC ON HTR 01,17 IN	1229.6	0.6	1.06
WW TC AJ HTR 02,17 IN	1208.2	0.6	0.99
WW TC OP HTR 02,17 IN	1221.6	0.5	1.03
WW TC ON HTR 08,17 IN	1178.8	0.4	0.90
WW TC ON HTR 10,17 IN	1186.1	0.6	0.92
WW TC ON HTR 11,17 IN	1176.5	0.5	0.89
WW TC ON HTR 18,17 IN	1191.4	0.4	0.94
WW TC ON HTR 19,17 IN	1189.1	0.5	0.93
WW TC ON HTR 21,17 IN	1151.9	0.6	0.81
WW TC ON HTR 22,17 IN	1180.0	0.5	0.90
WW TC ON HTR 33,17 IN	1115.8	0.5	0.70
WW TC ON HTR 37,17 IN	1140.0	0.4	0.78
WW TC ON HTR 06,19 IN	1274.1	0.5	1.19
WW TC AJ HTR 07,19 IN	1238.7	0.9	1.08
WW TC OP HTR 07,19 IN	1255.8	0.6	1.14
WW TC ON HTR 09,19 IN	1233.9	0.5	1.07
WW TC ON HTR 14,19 IN	1191.3	0.4	0.94
WW TC ON HTR 18,19 IN	1214.6	0.4	1.01
WW TC ON HTR 27,19 IN	1128.9	0.3	0.74
WW TC ON HTR 30,19 IN	1147.6	0.4	0.80
WW TC ON HTR 34,19 IN	1195.4	0.3	0.95
WW TC ON HTR 36,19 IN	1183.3	0.4	0.91
WW TC ON HTR 37,19 IN	1147.2	0.3	0.80
WW TC ON HTR 05,21 IN	1297.9	0.3	1.27
WW TC ON HTR 06,21 IN	1299.6	0.4	1.27
WW TC ON HTR 21,21 IN	1182.2	0.4	0.91
WW TC ON HTR 24,21 IN	1170.4	0.4	0.87
WW TC ON HTR 25,21 IN	1158.6	0.5	0.83
WW TC ON HTR 27,21 IN	1179.9	0.5	0.90
WW TC ON HTR 30,21 IN	1216.7	0.4	1.02
WW TC ON HTR 33,21 IN	1226.7	0.5	1.05
WW TC ON HTR 34,21 IN	1186.4	0.4	0.92
WW TC ON HTR 04,23 IN	1297.5	0.5	1.27
WW TC ON HTR 09,23 IN	1233.0	0.4	1.07
WW TC ON HTR 14,23 IN	1233.0	0.4	1.07
WW TC ON HTR 24,23 IN	1177.9	0.3	0.89
WW TC ON HTR 28,23 IN	1194.5	0.3	0.95
WW TC ON HTR 31,23 IN	1174.2	0.4	0.88
WW TC ON ROD 01,25 IN	1285.4	0.4	1.23
WW TC ON ROD 02,25 IN	1234.3	0.3	1.07
WW TC ON ROD 05,25 IN	1249.4	0.4	1.12
WW TC ON ROD 08,25 IN	1178.7	0.3	0.90
WW TC ON ROD 14,25 IN	1193.9	0.4	0.94
WW TC ON ROD 04,27 IN	1236.7	0.4	1.08
WW TC ON ROD 07,27 IN	1268.7	0.3	1.18

Test 12, run 203 (continued)

INSTRUMENT	20-SEC AVG	STD DEV	NORMALIZED TEMP
WW TC ON ROD 12,27 IN	1188.0	0.4	0.93
WW TC ON ROD 16,27 IN	1174.2	0.4	0.88
WW TC ON ROD 18,27 IN	1191.6	0.4	0.94
WW TC ON ROD 03,29 IN	1260.4	0.4	1.15
WW TC ON ROD 06,29 IN	1253.7	0.3	1.13
WW TC ON ROD 10,29 IN	1200.2	0.5	0.96
WW TC ON ROD 01,37 IN	1263.7	0.3	1.16
WW TC ON ROD 02,37 IN	1224.5	0.3	1.04
WW TC ON ROD 08,37 IN	1191.2	0.3	0.94
WW TC ON ROD 14,37 IN	1215.8	0.5	1.01
WW TC ON ROD 04,51 IN	1228.7	0.2	1.05
WW TC ON ROD 07,51 IN	1237.1	0.4	1.08
WW TC ON ROD 12,51 IN	1197.7	0.3	0.96
WW TC ON ROD 16,51 IN	1203.5	0.3	0.97
WW TC ON ROD 18,51 IN	1201.0	0.3	0.97
WW TC ON ROD 03,63 IN	1237.1	0.4	1.08
WW TC ON ROD 06,63 IN	1221.4	0.4	1.03
WW TC ON ROD 10,63 IN	1219.5	0.3	1.02
DUCT THERMOCOUPLES			
DUCT WALL TC,CH 38,19 IN(DEG F)	1112.4	0.3	0.69
DUCT WALL TC,CH 53,19 IN	1114.9	0.2	0.70
DUCT WALL TC,CH 28,21 IN	1152.9	0.3	0.82
DUCT WALL TC,CH 43,21 IN	1154.7	0.3	0.82
DUCT WALL TC,CH 44,21 IN	1152.2	0.3	0.82
TEST SECTION HOUSING THERMOCOUPLES			
TS SHELL-BOT(DEG F)	897.4	6.1	
TS GUARD HTR-BOT	845.3	0.6	
TS HTR-BOT	785.4	0.3	
TS SHELL-LOW CTR	1121.7	0.3	
TS GUARD HTR-LOW CTR	1045.5	0.3	
TS HTR-LOW CTR	858.3	0.3	
TS SHELL-UP CTR	1192.9	0.4	
TS GUARD HTR-UP CTR	1050.5	0.2	
TS HTR-UP CTR	928.1	0.4	
TS SHELL-TOP	1207.8	0.2	
TS GUARD HTR-TOP	1114.2	0.3	
TS HTR-TOP	924.7	0.5	
REFERENCE BOX THERMOCOUPLES			
150 DEG REF BOX 1(DEG F)	150.5	0.2	
150 DEG REF BOX 2	151.3	0.2	
150 DEG REF BOX 3	154.3	0.4	
150 DEG REF BOX 4	152.8	0.4	
150 DEG REF BOX 5	151.3	0.2	
MISCELLANEOUS			
SOD PUMP SPEED(RPM)	1055.7	17.4	
EXPANSION TANK LEVEL(% FULL)	70.7	0.2	

TEST SERIES 10(BUNDLE 3C); TEST 12 RUN 207 03/16/78 9 35 57

CONDITIONS:

TEST SECTION FLOW: 3.74 L/S (59.1 GPM)

TEST SECTION POWER

19 CENTRAL HEATERS: 246.7 KW (24.3 KW/M/ROD) (7.4 KW/FT/ROD)

12 EDGE HEATERS: 154.5 KW (24.1 KW/M/ROD) (7.4 KW/FT/ROD)

TOTAL(31 HEATERS): 401.2 KW

TEST SECTION INLET TEMPERATURE: 534 DEG C (994 DEG F)

TEST SECTION OUTLET TEMPERATURE: 633 DEG C (1172 DEG F)

HEAT BALANCE:

HEAT INPUT FROM 31 FUEL PIN SIMULATORS: 401.2 KW

HEAT ABSORBED BY SODIUM=

FLOW X SP.HEAT X (TS OUT TEMP - TS IN TEMP) 385.6 KW

% OF INPUT HEAT ACCOUNTED FOR: 96.1 %

INSTRUMENT	20-SEC AVG	STD DEV
HEATER POWER-CENTRAL RODS(KW)		
HTR POWER IN ROD 1	13.0	0.0
HTR POWER IN RODS 8,9,10	39.1	0.0
HTR POWER IN RODS 14,15,16	38.9	0.0
HTR POWER IN RODS 2,3,11,19	52.0	0.0
HTR POWER IN RODS 5,6,13,17	51.9	0.0
HTR POWER IN RODS 4,7,12,18	52.0	0.0
HEATER POWER-EDGE RODS(KW)		
HTR POWER IN RODS 30,31	25.3	0.0
HTR POWER IN RODS 24,25,27,28	51.3	0.0
HTR POWER IN RODS 33,34	25.8	0.0
HTR POWER IN RODS 21,22,36,37	52.1	0.0
FLOWS		
TEST SECTION(TS) FLOW IN(GPM)	59.1	0.1
TS FLOW OUT(GPM)	60.2	0.2
TS BYPASS FLOW(GPM)	-0.9	0.2
LOOP FLOW TOTAL(GPM)	58.1	0.4
RADIATOR AIR FLOW(CFM)	17.1	0.8
PRESSURES		
TS IN PRESS(PSIG)	61.6	0.2
TS OUT PRESS(PSIG)	7.7	0.1
PUMP OUT PRESS(PSIG)	58.6	0.1
TS LINE PRESS IN(PSIG)	62.0	0.1
EXP TANK ARGON PRESS(PSIG)	4.3	0.1
TS BYP LINE PRESS IN(PSIG)	62.9	0.1
TS BYP LINE PRESS OUT(PSIG)	8.0	0.1

Test 12, run 207 (continued)

INSTRUMENT	20-SEC AVG	STD DEV	NORMALIZED TEMP
LOOP THERMOCOUPLES			
TEST SECT INLET WELL(DEG F)	994.3	0.6	
TEST SECT OUTLET WELL(DEG F)	1172.9	0.3	
PUMP IN PIPE WALL TC	989.0	5.1	
PUMP OUT PIPE WALL TC	987.9	0.3	
RAD IN PIPE WALL TC	1075.8	5.5	
RAD OUT PIPE WALL TC	989.9	1.6	
HEATER INTERNAL THERMOCOUPLES			
HTR TC IN HTR 08,12AB IN(DEG F)	1173.3	0.4	1.00
HTR TC IN HTR 13,12AB IN	1164.4	0.4	0.95
HTR TC IN HTR 18,12AB IN	1175.4	0.1	1.01
HTR TC IN HTR 22,12AB IN	1169.0	0.4	0.98
HTR TC IN HTR 08,12BC IN	1166.3	0.4	0.96
HTR TC IN HTR 13,12BC IN	1166.2	0.3	0.96
HTR TC IN HTR 18,12BC IN	1176.3	0.4	1.02
HTR TC IN HTR 22,12BC IN	1166.0	0.4	0.96
HTR TC IN HTR 09,15AB IN	1209.9	0.5	1.21
HTR TC IN HTR 10,15AB IN	1199.9	0.5	1.15
HTR TC IN HTR 16,15BC IN	1190.4	0.4	1.10
HTR TC IN HTR 25,15BC IN	1187.0	0.3	1.08
HTR TC IN HTR 02,15.1 IN	1228.6	0.5	1.31
HTR TC IN HTR 03,15.1 IN	1238.2	0.6	1.37
HTR TC IN HTR 06,15.1 IN	1234.7	0.6	1.35
HTR TC IN HTR 15,15.1 IN	1218.1	0.4	1.25
HTR TC IN HTR 24,15.1 IN	1195.5	0.3	1.13
HTR TC IN HTR 33,15.1 IN	1194.6	0.3	1.12
HTR TC IN HTR 36,15.1 IN	1192.1	0.4	1.11
HTR TC IN HTR 02,15.4 IN	1236.3	0.4	1.35
HTR TC IN HTR 03,15.4 IN	1230.0	0.6	1.32
HTR TC IN HTR 06,15.4 IN	1239.3	0.5	1.37
HTR TC IN HTR 15,15.4 IN	1206.6	0.5	1.19
HTR TC IN HTR 24,15.4 IN	1210.4	0.3	1.21
HTR TC IN HTR 33,15.4 IN	1196.3	0.3	1.13
HTR TC IN HTR 34,15.4 IN	1190.1	1.1	1.10
HTR TC IN HTR 36,15.4 IN	1191.1	0.3	1.10
HTR TC IN HTR 02,15.6 IN	1237.0	0.5	1.36
HTR TC IN HTR 03,15.6 IN	1225.4	0.6	1.29
HTR TC IN HTR 06,15.6 IN	1258.3	0.5	1.48
HTR TC IN HTR 15,15.6 IN	1203.7	0.3	1.17
HTR TC IN HTR 24,15.6 IN	1207.9	0.3	1.20
HTR TC IN HTR 33,15.6 IN	1197.2	0.4	1.14
HTR TC IN HTR 34,15.6 IN	1193.3	0.7	1.11
HTR TC IN HTR 36,15.6 IN	1182.2	0.4	1.05
HTR TC IN HTR 03,15.9 IN	1212.3	0.6	1.22
HTR TC IN HTR 06,15.9 IN	1257.5	0.4	1.47
HTR TC IN HTR 15,15.9 IN	1198.9	0.4	1.15
HTR TC IN HTR 24,15.9 IN	1209.6	0.3	1.21
HTR TC IN HTR 33,15.9 IN	1192.9	0.3	1.11

Test 12, run 207 (continued)

INSTRUMENT	20-SEC AVG	STD DEV	NORMALIZED TEMP
HTR TC IN HTR 34,15.9 IN	1188.6	0.3	1.09
HTR TC IN HTR 36,15.9 IN	1178.9	0.4	1.03
HTR TC IN HTR 04,16.1 IN	1235.9	0.3	1.35
HTR TC IN HTR 05,16.1 IN	1235.1	0.4	1.35
HTR TC IN HTR 07,16.1 IN	1235.8	0.5	1.35
HTR TC IN HTR 21,16.1 IN	1202.9	0.7	1.17
HTR TC IN HTR 27,16.1 IN	1210.3	0.3	1.21
HTR TC IN HTR 04,16.4 IN	1238.7	0.4	1.37
HTR TC IN HTR 05,16.4 IN	1237.1	0.4	1.36
HTR TC IN HTR 07,16.4 IN	1236.3	0.6	1.35
HTR TC IN HTR 21,16.4 IN	1207.2	0.4	1.19
HTR TC IN HTR 27,16.4 IN	1214.7	0.4	1.23
HTR TC IN HTR 04,16.6 IN	1234.0	0.4	1.34
HTR TC IN HTR 05,16.6 IN	1236.4	0.4	1.36
HTR TC IN HTR 07,16.6 IN	1225.9	0.6	1.30
HTR TC IN HTR 21,16.6 IN	1198.7	0.3	1.14
HTR TC IN HTR 27,16.6 IN	1209.0	0.4	1.20
HTR TC IN HTR 04,16.9 IN	1231.7	0.4	1.33
HTR TC IN HTR 07,16.9 IN	1225.2	0.5	1.29
HTR TC IN HTR 21,16.9 IN	1197.5	0.4	1.14
HTR TC IN HTR 27,16.9 IN	1204.4	0.2	1.18
HTR TC IN HTR 11,18AB IN	1233.3	0.5	1.34
HTR TC IN HTR 12,18AB IN	1223.1	0.5	1.28
HTR TC IN HTR 14,18AB IN	1196.0	0.3	1.13
HTR TC IN HTR 30,18AB IN	1234.8	0.4	1.35
HTR TC IN HTR 11,18BC IN	1233.4	0.5	1.34
HTR TC IN HTR 12,18BC IN	1222.9	0.4	1.28
HTR TC IN HTR 14,18BC IN	1197.8	0.4	1.14
HTR TC IN HTR 17,18BC IN	1227.8	0.2	1.31
HTR TC IN HTR 30,18BC IN	1223.4	0.3	1.28
WIRE WRAP THERMOCOUPLES			
WW TC ON HTR 12,-1 IN(DEG F)	996.4	0.5	0.01
WW TC ON HTR 16,-1 IN	998.9	0.5	0.03
WW TC ON HTR 12,01 IN	1013.3	0.3	0.11
WW TC ON HTR 16,09 IN	1096.4	0.5	0.57
WW TC ON HTR 04,11 IN	1122.1	0.4	0.72
WW TC ON HTR 05,11 IN	1108.8	0.4	0.64
WW TC ON HTR 13,11 IN	1115.8	0.3	0.68
WW TC ON HTR 17,11 IN	1111.1	0.4	0.65
WW TC ON HTR 28,11 IN	1103.3	0.3	0.61
WW TC ON HTR 31,11 IN	1106.9	0.4	0.63
WW TC ON HTR 03,13 IN	1121.7	0.4	0.71
WW TC ON HTR 11,13 IN	1136.0	0.6	0.79
WW TC ON HTR 13,13 IN	1131.3	0.3	0.77
WW TC ON HTR 15,13 IN	1134.8	0.3	0.79
WW TC ON HTR 17,13 IN	1132.1	0.4	0.77
WW TC ON HTR 22,13 IN	1122.9	0.6	0.72
WW TC ON HTR 01,15 IN	1156.2	0.4	0.91
WW TC ON HTR 03,15 IN	1151.5	0.4	0.88

Test 12, run 207 (continued)

INSTRUMENT	20-SEC AVG	STD DEV	NORMALIZED TEMP
WW TC ON HTR 08,15 IN	1147.9	0.3	0.86
WW TC ON HTR 10,15 IN	1147.0	0.5	0.86
WW TC ON HTR 15,15 IN	1151.7	0.4	0.88
WW TC ON HTR 19,15 IN	1149.1	0.4	0.87
WW TC ON HTR 25,15 IN	1117.2	0.4	0.69
WW TC ON HTR 36,15 IN	1094.6	0.4	0.56
WW TC ON HTR 01,17 IN	1176.6	0.5	1.02
WW TC AJ HTR 02,17 IN	1167.7	0.5	0.97
WW TC OP HTR 02,17 IN	1175.2	0.3	1.01
WW TC ON HTR 08,17 IN	1156.9	0.4	0.91
WW TC ON HTR 10,17 IN	1155.7	0.5	0.90
WW TC ON HTR 11,17 IN	1155.2	0.5	0.90
WW TC ON HTR 18,17 IN	1160.7	0.5	0.93
WW TC ON HTR 19,17 IN	1162.0	0.3	0.94
WW TC ON HTR 21,17 IN	1140.6	0.5	0.82
WW TC ON HTR 22,17 IN	1163.7	0.4	0.95
WW TC ON HTR 33,17 IN	1115.9	0.5	0.68
WW TC ON HTR 37,17 IN	1140.6	0.3	0.82
WW TC ON HTR 06,19 IN	1210.2	0.4	1.21
WW TC AJ HTR 07,19 IN	1182.2	0.6	1.05
WW TC OP HTR 07,19 IN	1192.0	0.5	1.11
WW TC ON HTR 09,19 IN	1178.8	0.4	1.03
WW TC ON HTR 14,19 IN	1165.9	0.5	0.96
WW TC ON HTR 18,19 IN	1177.3	0.4	1.02
WW TC ON HTR 27,19 IN	1120.6	0.3	0.71
WW TC ON HTR 30,19 IN	1133.6	0.4	0.78
WW TC ON HTR 34,19 IN	1165.7	0.4	0.96
WW TC ON HTR 36,19 IN	1161.1	0.4	0.93
WW TC ON HTR 37,19 IN	1137.9	0.3	0.80
WW TC ON HTR 05,21 IN	1222.7	0.2	1.28
WW TC ON HTR 06,21 IN	1222.1	0.4	1.27
WW TC ON HTR 21,21 IN	1156.7	0.4	0.91
WW TC ON HTR 24,21 IN	1147.0	0.4	0.85
WW TC ON HTR 25,21 IN	1135.0	0.5	0.79
WW TC ON HTR 27,21 IN	1156.1	0.4	0.91
WW TC ON HTR 30,21 IN	1178.3	0.5	1.03
WW TC ON HTR 33,21 IN	1187.6	0.4	1.08
WW TC ON HTR 34,21 IN	1164.3	0.4	0.95
WW TC ON HTR 04,23 IN	1213.1	0.5	1.22
WW TC ON HTR 09,23 IN	1183.6	0.4	1.06
WW TC ON HTR 14,23 IN	1187.1	0.5	1.08
WW TC ON HTR 24,23 IN	1149.1	0.4	0.87
WW TC ON HTR 28,23 IN	1164.8	0.4	0.95
WW TC ON HTR 31,23 IN	1149.4	0.6	0.87
WW TC ON ROD 01,25 IN	1213.0	0.4	1.22
WW TC ON ROD 02,25 IN	1183.8	0.3	1.06
WW TC ON ROD 05,25 IN	1196.2	0.2	1.13
WW TC ON ROD 08,25 IN	1148.8	0.2	0.86
WW TC ON ROD 14,25 IN	1163.1	0.6	0.94
WW TC ON ROD 04,27 IN	1186.8	0.4	1.08
WW TC ON ROD 07,27 IN	1206.6	0.4	1.19

Test 12, run 207 (continued)

INSTRUMENT	20-SEC AVG	STD DEV	NORMALIZED TEMP
WW TC ON ROD 12,27 IN	1162.1	0.2	0.94
WW TC ON ROD 16,27 IN	1147.1	0.3	0.86
WW TC ON ROD 18,27 IN	1160.8	0.4	0.93
WW TC ON ROD 03,29 IN	1198.1	0.4	1.14
WW TC ON ROD 06,29 IN	1198.1	0.4	1.14
WW TC ON ROD 10,29 IN	1162.2	0.3	0.94
WW TC ON ROD 01,37 IN	1201.3	0.4	1.16
WW TC ON ROD 02,37 IN	1174.2	0.4	1.01
WW TC ON ROD 08,37 IN	1161.3	0.2	0.93
WW TC ON ROD 14,37 IN	1179.6	0.3	1.04
WW TC ON ROD 04,51 IN	1183.0	0.3	1.06
WW TC ON ROD 07,51 IN	1188.0	0.3	1.08
WW TC ON ROD 12,51 IN	1165.3	0.3	0.96
WW TC ON ROD 16,51 IN	1169.6	0.2	0.98
WW TC ON ROD 18,51 IN	1164.1	0.4	0.95
WW TC ON ROD 03,63 IN	1187.0	0.3	1.08
WW TC ON ROD 06,63 IN	1178.3	0.4	1.03
WW TC ON ROD 10,63 IN	1175.7	0.4	1.02
DUCT THERMOCOUPLES			
DUCT WALL TC,CH 38,19 IN(DEG F)	1106.7	0.2	0.63
DUCT WALL TC,CH 53,19 IN	1112.3	0.3	0.66
DUCT WALL TC,CH 28,21 IN	1129.8	0.2	0.76
DUCT WALL TC,CH 43,21 IN	1133.6	0.4	0.78
DUCT WALL TC,CH 44,21 IN	1129.8	0.1	0.76
TEST SECTION HOUSING THERMOCOUPLES			
TS SHELL-BOT(DEG F)	1000.7	2.8	
TS GUARD HTR-BOT	915.7	0.6	
TS HTR-BOT	832.8	0.5	
TS SHELL-LOW CTR	1097.4	0.3	
TS GUARD HTR-LOW CTR	1029.9	0.1	
TS HTR-LOW CTR	861.6	0.5	
TS SHELL-UP CTR	1159.3	0.5	
TS GUARD HTR-UP CTR	1037.5	0.4	
TS HTR-UP CTR	929.9	0.4	
TS SHELL-TOP	1170.0	0.4	
TS GUARD HTR-TOP	1091.1	0.3	
TS HTR-TOP	927.7	0.3	
REFERENCE BOX THERMOCOUPLES			
150 DEG REF BOX 1(DEG F)	150.6	0.4	
150 DEG REF BOX 2	152.1	0.3	
150 DEG REF BOX 3	154.4	0.4	
150 DEG REF BOX 4	152.7	0.4	
150 DEG REF BOX 5	150.8	0.4	
MISCELLANEOUS			
SOD PUMP SPEED(RPM)	2235.6	25.9	
EXPANSION TANK LEVEL(% FULL)	72.4	0.1	

ORNL/TM-6498
Dist. Category UC-79,
-79e, -79p

Internal Distribution

1. A. H. Anderson
2. N. E. Clapp
3. C. W. Collins
4. W. B. Cottrell
5. J. F. Dearing
6. G. F. Flanagan
7-16. M. H. Fontana
17. D. N. Fry
18. P. W. Garrison
19. P. A. Gnadt
20. A. G. Grindell
21. J. T. Han
22. N. Hanus
23. W. O. Harms
24. H. W. Hoffman
25. T. L. Hudson
26. M. A. Karnitz
27. G. A. Klein
28. T. S. Kress
29. W. H. Leavell
30. M. Levenson
31. R. E. MacPherson
32. C. D. Martin
33. R. W. McCulloch
34. B. H. Montgomery
35. R. L. Moore
36. R. H. Morris
37. F. R. Mynatt
38. W. R. Nelson
39. L. C. Oakes
40. L. F. Parsly
41. P. Patriarca
42. H. Postma
43. R. J. Ribando
44. M. R. Sheldon
45. W. H. Sides
46. M. J. Skinner
47. I. Spiewak
48. R. S. Stone
49. R. H. Thornton
50. E. T. Tomlinson
51. H. E. Trammell
52. D. B. Trauger
53. J. L. Wantland
54. G. D. Whitman
55. A. L. Wright
56-57. Central Research Library
58. Y-12 Document Reference Section
59-61. Laboratory Records Department
62. Laboratory Records (RC)

External Distribution

63. Assistant Administrator, Nuclear Energy, Department of Energy, Washington, DC 20545
64-65. Director, Division of Reactor Research and Technology, Department of Energy, Washington, DC 20545
66. Director, Reactor Division, DOE-ORO
67. Office of Assistant Manager, Energy Research and Development, DOE-ORO
68-305. For distribution as shown in TID-4500 under categories UC-79, -79e, -79p

☆U.S. GOVERNMENT PRINTING OFFICE: 1979-748-189/402