OAK RIDGE NATIONAL LABORATORY LIBRARIES
3 4456 0550545 0

ORNL/TM-6138

cy. 21

Preliminary Report on the Promise of Accelerator-Driven Natural-Uranium-Fueled Light-Water-Moderated Breeding Power Reactors

Shud Greenspan

OAK RIDGE NATIONAL LABORATORY
CENTRAL RESEARCH LIBRARY
DOCUMENT COLLECTION
LIBRARY LOAN COPY
DO NOT TRANSFER TO ANOTHER PERSON
If you wish someone else to see this document, send in name with document and the library will arrange a loan.

OAK RIDGE NATIONAL LABORATORY
OPERATED BY UNION CARBIDE CORPORATION - FOR THE DEPARTMENT OF ENERGY

C-78

[illegible] of the United [illegible] nor [illegible] makes any warranty [illegible] responsibility for any third party [illegible] apparatus, product or process [illegible] that its use by such third party would not infringe [illegible] rights.

ORNL/TM-6138

Contract No. W-7405-eng-26

Neutron Physics Division

PRELIMINARY REPORT ON THE PROMISE OF ACCELERATOR-DRIVEN NATURAL-URANIUM-FUELED LIGHT-WATER-MODERATED BREEDING POWER REACTORS

Ehud Greenspan*

Manuscript Completed: July 1977

Date Published - February 1978

*On leave from the Nuclear Research Center-Negev and the Ben-Gurion University of the Negev, Israel

NOTICE This document contains information of a preliminary nature. It is subject to revision or correction and therefore does not represent a final report.

OAK RIDGE NATIONAL LABORATORY
Oak Ridge, Tennessee 37830
operated by
UNION CARBIDE CORPORATION
for the
DEPARTMENT OF ENERGY

CONTENTS

Page

ABSTRACT ix

1. INTRODUCTION 1

2. SPALLATION NEUTRON SOURCES 4

3. GENERAL LAYOUT OF ADLWRs 8
   3.1 General Considerations 8
   3.2 Spherical Configuration 8
   3.3 Cylindrical Configuration 10
   3.4 Parallelepiped Configuration 12
   3.5 Blanket Layout 12
   3.6 Target-Assembly Considerations 16

4. ADLWR PERFORMANCE EVALUATION 18
   4.1 Lattice Properties 18
   4.2 Blanket Performance 22
      4.2.1 Maximum permissible power density 22
      4.2.2 Maximum permissible flux of source neutrons . . . 24
   4.3 Global ADLWR Characteristics 24
      4.3.1 Reactor energetics and blanket radius 24
      4.3.2 Blanket length 32
      4.3.3 Power density and specific power 33
   4.4 On the ADLWR Fuel Cycle 35
      4.4.1 The ^{238}U-Pu fuel cycle 35
      4.4.2 Use of depleted uranium 41
      4.4.3 On the thorium and denatured fuel cycle 44

5. DISCUSSION 46
   5.1 Economical Considerations 46
   5.2 Alternative Neutron Sources 47
   5.3 Plant Efficiencies 47
   5.4 Excess Neutrons 49
   5.5 Safety and Environmental Considerations 50
   5.6 Operational Flexibility 51
   5.7 ADLWR for Fuel Production 51
   5.8 Alternative Blanket Concepts 52

6. SUMMARY AND CONCLUSIONS 56

ACKNOWLEDGMENT 61

REFERENCES 62

OAK RIDGE NATIONAL LABORATORY LIBRARIES

3 4456 0550545 0

LIST OF TABLES

Tables		Page
1.	Global parameters of a 1000-MWe ADLWR	26
2.	Global parameters of a 1000-MWe ADLWR with a lead target; sensitivity to input assumptions	28
3.	Annular cylindrical blanket length-to-diameter ratio and axial average-to-maximum power density as a function of the blanket coverage efficiency	33
4.	Comparison of power densities and specific powers of ADLWRs with those of LWRs and HWRs	34

LIST OF FIGURES

Figure		Page
1.	Dependence of the spallation neutron yield on the proton beam energy and target element (taken from Ref. 9)	5
2.	Spectrum of the spallation neutron source at 90° from a 1-GeV proton beam impinging on a Pb-Bi target (taken from Ref. 9)	7
3.	A schematic layout of a spherical ADLWR	9
4.	A schematic layout of a cylindrical ADLWR	11
5.	A schematic layout of a parallelepiped-shaped ADLWR	13
6.	Schematic layouts of ADLWR blankets having a pressure tube design	14
7.	Lattice multiplication [m = k/(1-k)] and initial conversion ratio (ICR) for natural uranium oxide rods in light-water lattices. Fuel is cladded with 0.6 mm Zircaloy. Lattices are clean and hot ($\overline{T}_{H_2O}$ = 290°C; $\overline{T}_{fuel}$ = 1000°C)	19
8.	Infinite multiplication constant (k_∞), fast fission effect (β) and energy generation ability (B) of light-water lattices fueled with UO_2 or U_3Si fuel rods 0.5 cm in radius and clad with 0.6 mm Zircaloy. Lattices are clean and hot ($\overline{T}_{H_2O}$ = 290°C; $\overline{T}_{fuel}$ = 1000°C)	20
9.	Fission-rate distribution across a UO_2-fueled light-water blanket driven by a 14-MeV neutron source. Water-to-fuel volume ratio is 1.5	23
10.	Sensitivity of a 1000-MWe accelerator-driven power reactor characteristics to blanket energy generation. Target is of lead, providing 22 neutrons per 1-GeV proton	29
11.	The sensitivity of selected characteristics of an accelerator-driven power reactor to thermal efficiency. Target is of lead, providing 22 neutrons per 1-GeV proton	31
12.	Variation of the fissile-fuel content of several light-water lattices with burnup. Fuel rods are 0.5 cm in radius clad with 0.6 mm Zircaloy. Water-to-fuel volume ratio is (a) 1.5, (b) 0.5, and (c) 0.5	36

Figure | Page

13. Variation of the infinite multiplication constant of U_3Si-H_2O lattices (moderator-to-fuel volume ratio is 2.0) with burnup, for first three consecutive irradiation cycles. Fission products are extracted in between irradiation cycles 39

14. A schematic description of a fuel-cycle for a nuclear power economy based on the fuel-self-sufficient ADLWR compared with the fuel cycle for conventional LWRs 40

15. The variation of the effective multiplication constant of depleted-uranium (UO_2) fueled light-water lattices with burnup. Fuel is 0.5 cm in radius and clad with 0.6 mm Zircaloy; $V_m/V_f = 1.5$; geometric buckling = 0.0004 m^{-2} 43

16. Variation of the infinite multiplication constant and fissile fuel content of U_3Si-H_2O working in tandem with LWRs 53

17. A schematic description of tandem or triplet fuel cycles supported by a fissile-fuel-producer ADLWR 54

ABSTRACT

A new concept for a power breeder reactor that consists of an accelerator-driven subcritical thermal fission system is proposed. In this system an accelerator provides a high-energy proton beam which interacts with a heavy-element target to produce, via spallation reactions, an intense source of neutrons. This source then drives a natural-uranium-fueled, light-water-moderated and -cooled subcritical blanket which both breeds new fuel and generates heat that can be converted to electrical power. This report presents a general layout of the resulting Accelerator Driven Light Water Reactor (ADLWR), evaluates its performance, discusses its fuel cycle characteristics, and identifies the potential contributions to the nuclear energy economy this type of power reactor might make.

A light-water thermal fission system is found to provide an attractive feature when designed to be source-driven: The equilibrium fissile fuel content that gives the highest energy multiplication is approximately equal to the content of ^{235}U in natural uranium. Consequently, natural-uranium-fueled ADLWRs that are designed to have the highest energy generation per source neutron are also fuel-self-sufficient; that is, their fissile fuel content remains constant with burnup. This feature allows the development of a nuclear energy system that is based on the most highly developed fission technology available (the light water reactor technology) and yet has a simple and safe fuel cycle. ADLWRs will breed on natural uranium, have no doubling time limitation, and be free from the need for uranium enrichment or for the separation of plutonium.

It appears that ADLWRs could also be efficiently operated with thorium fuel cycles and with denatured fuel cycles. In addition, fissile-fuel-producing ADLWRs might work in tandem with LWRs to provide a nuclear power system that is fuel-self-sufficient and is free from the need for uranium enrichment or plutonium separation. It may also be possible to fuel ADLWRs with depleted uranium.

This preliminary evaluation of the performance of ADLWRs indicates that the net overall efficiency for the conversion of the fission energy into electricity of a power system that is based on ADLWRs might be comparable to that of a power system based on the symbiosis of accelerator-driven fuel factories and conventional LWRs but smaller than that of a power system based on the symbiosis of accelerator fuel factories and advanced converter reactors. Compared with the blankets of other accelerator-driven fission systems, the blankets of ADLWRs will have significantly lower radiation damage rates, lower power density gradients, and lower rates of variation of energy multiplication with burnup.

It is concluded that it is possible, but quite uncertain at this point, that ADLWRs could be developed to provide viable power reactors. The major uncertainties are associated with the successful development of the accelerator and target assemblies, as well as with the attainment of a high enough overall plant efficiency. In view of the attractive fuel cycle characteristics offered by the ADLWRs and the useful options they may provide for the development of the nuclear energy economy, it is recommended that the feasibility of source-driven subcritical thermal power breeder reactors be thoroughly investigated.

1. INTRODUCTION

Recently there has been an increased interest in the use of high-energy particle accelerators for the conversion of fertile fuel into fissile fuel.[1-5] The basic idea is to use a highly accelerated proton beam (in the GeV range) to produce neutrons in a heavy-element target by the spallation process and then to utilize the neutrons to convert the fertile isotopes ^{238}U or ^{232}Th into the fissile isotopes ^{239}Pu or ^{233}U respectively. Fission energy will be generated as a byproduct at a rate that can supply part or all of the power required for operating the system. The resulting "electrically" produced fissile fuel would then be used as makeup fuel for nonbreeding fission reactors. In other words, accelerator-driven fissile-fuel factories are being proposed as alternatives or supplements to breeding reactors to support a nuclear power system that is based on thermal (non-breeding) reactors.

In the work described in this report the feasibility of using an accelerator-produced neutron source to drive a subcritical fission system for the primary purpose of generating power is examined.
The rationale behind this approach is that the performance of currently designed fission power reactors is limited by the fact that they must operate in the critical mode. In the case of light-water reactors, this means that the uranium must be enriched. Heavy-water reactors can use natural uranium, but only to a low burnup level (about 7500 MWD/T). And in neither system is there an excess of neutrons for breeding. If, however, an independent and very intense source of neutrons were available to drive a subcritical system, then the criticality constraint would be removed, and the performance of the system could be improved by alleviating some of the problems inherent in current fission reactor technology, the most basic one perhaps being poor utilization of nuclear fuel. In fact, it is the search for a solution to this problem that provided the primary incentive for the earlier proposals[1-5] for "accelerator breeders" that would supply the fuel for fission power reactors. It should be possible, however, to design such systems so that they not only breed but also are viable power reactors themselves with attractive fuel cycle characteristics.

The assessment of the potential of accelerator-driven subcritical breeding power reactors is done here by considering, in some detail, a single type of fission system: a light-water thermal reactor (LWR). One reason for the selection of this fission system for examination is that the technology of LWRs is the most developed fission reactor technology available. Another is that it has recently been found[6-9] that light-water fission systems fueled with natural uranium can make efficient blankets for power-generating fission-fusion hybrid reactors. The resulting Light Water Hybrid Reactor (LWHR) possesses a number of useful features: (a) It can breed with natural uranium (thus it would have no doubling time limitation); and (b) the fuel cycle needed to support a LWHR-based power economy is free from the need for uranium enrichment or for plutonium separation.[8] The primary function of the fusion device of a LWHR (and of many other fusion-fission hybrid reactor concepts) is to provide an intense source of neutrons (usually 14.1-MeV neutrons originating from the D-T fusion reaction) to drive the subcritical fission system. An accelerator-produced neutron source could serve the same purpose. Thus we have the concept of an Accelerator-Driven Light-Water Reactor (ADLWR) described in the following sections.

Section 2 summarizes the properties of accelerator neutron sources that are relevant to the concept of ADLWRs and compares them against the properties of the neutron sources provided by D-T fusion devices. Section 3 describes the layout of the ADLWRs, and Section 4 presents an evaluation of the performance expected from them. Finally, Section 5 discusses a variety of considerations related to the performance and practicality of the ADLWR concept.

In this report the fuel cycle characteristics of the ADLWRs is dealt with in some length (in Section 4.4), as it is here that the proposed concept offers several novel and interesting features. The reference fuel cycle used for evaluating the characteristics of the ADLWR is the ^{238}U-Pu cycle, but the feasibility of running the ADLWR with a Th-^{233}U cycle and with a denatured fuel cycle is also briefly examined.

It should be emphasized that this work summarizes the results of a preliminary evaluation. The emphasis is on the ADLWR neutron and energy balance considerations, and no attempt is made to address the difficult and important questions regarding the accelerator and target design and operating characteristics (except for the source of neutrons they provide per given energy investment). Rather, the availability of an intense neutron source is assumed, and the question asked is: what effect could such a source have on the nuclear energy program if it were used to drive power reactors? In attempting to answer this question, the requirements for the neutron source (that is, the accelerator and target systems) for the application under consideration are defined.

2. SPALLATION NEUTRON SOURCES

Most of the spallation-based intense neutron sources that have been proposed[1–5] call for the use of accelerated proton beams. Figure 1 (taken from Refs. 4 or 10) shows the dependence of the neutron yield from proton-induced spallation reactions on the proton kinetic energy and on the target material. It is observed that the neutron yield strongly depends on the target material and has a linear dependence, in the energy range considered, on the proton energy. The proton beam energy required for generating a spallation neutron in uranium and lead targets is approximately 25 MeV and 55 MeV respectively. This is to be compared with 2×10^5 MeV of deuteron energy required per neutron produced by the D-T reaction in conventional neutron generators using solid titanium targets containing tritium and with 2×10^3 MeV required for advanced designs of accelerator-based neutron sources using a tritium gas target. On the other hand, D-T fusion devices are expected[11] to provide an intense source of 14-MeV neutrons with an investment of the order of 10 MeV per neutron. However, to support the operation of a D-T fusion device, the device must breed tritium, and this requirement has two important implications: (a) the production of tritium consumes neutrons, thus reducing the effective intensity of a D-T neutron source as compared with its actual intensity; and (b) the necessity of incorporating lithium in the blanket (for the tritium production) would complicate its design and present some safety-related issues (associated with lithium and tritium handling). These differences between the characteristics of the spallation and D-T fusion neutron sources, along with the fact that these two neutron sources rely upon completely different technologies (and require further development before being commercial), justify the examination of both approaches for providing the neutrons for source-driven subcritical fission system applications.

For the following analysis we shall assume[1,2,10] that a 1-GeV proton produces, on the average, 17.5 and 42 neutrons in lead and uranium

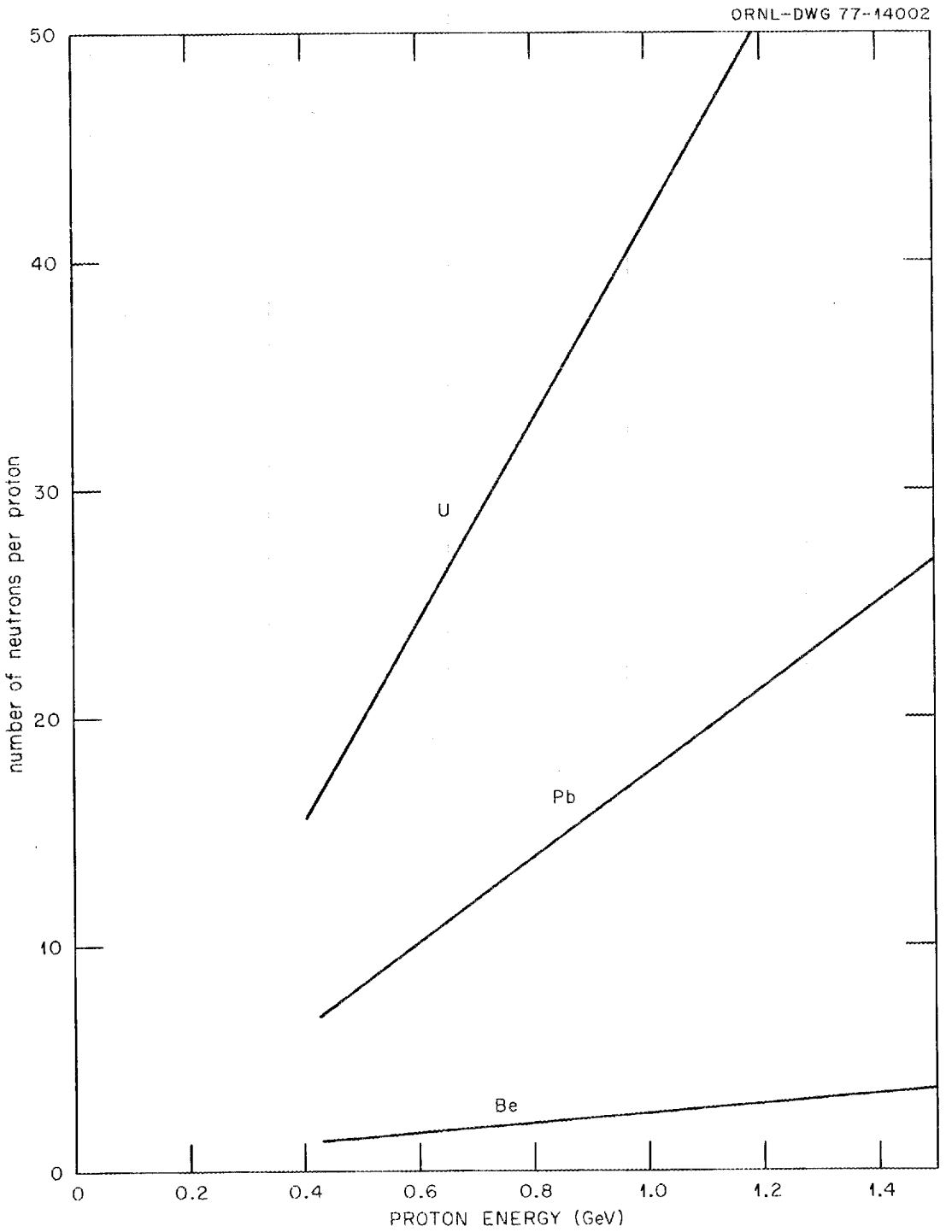

Fig. 1. Dependence of the spallation neutron yield on the proton beam energy and target element (taken from Ref. 10).

targets respectively. The energy deposited in the respective targets is 1 GeV and 4 GeV per 1-GeV proton. These neutron production figures pertain to thin targets 10 cm in diameter. A 20-cm-diam lead target can provide about 22 neutrons per 1-GeV proton;[4,10] however, for the reference case it is assumed that it provides only 17.5 neutrons per proton in order to be on the conservative side.

Figure 2 shows the spectrum of the spallation neutrons emitted at 90° from a beam of 1-GeV protons impinging on a Pb-Bi target.[10] It is observed that the spallation neutron source has a tail of very high energy neutrons. These energetic neutrons are expected[12] to be quite effective in causing fast fissions and other neutron multiplying reactions in the ^{238}U (of the blanket). The calculation of the fast-fission effect of the neutrons coming off the accelerator target in the light-water-moderated blanket under consideration is beyond the scope of this work. Instead we shall make what we think to be a conservative assumption - that the effectiveness of an average neutron from an accelerator neutron source for producing a fast fission is only one-half that of a 14-MeV neutron.

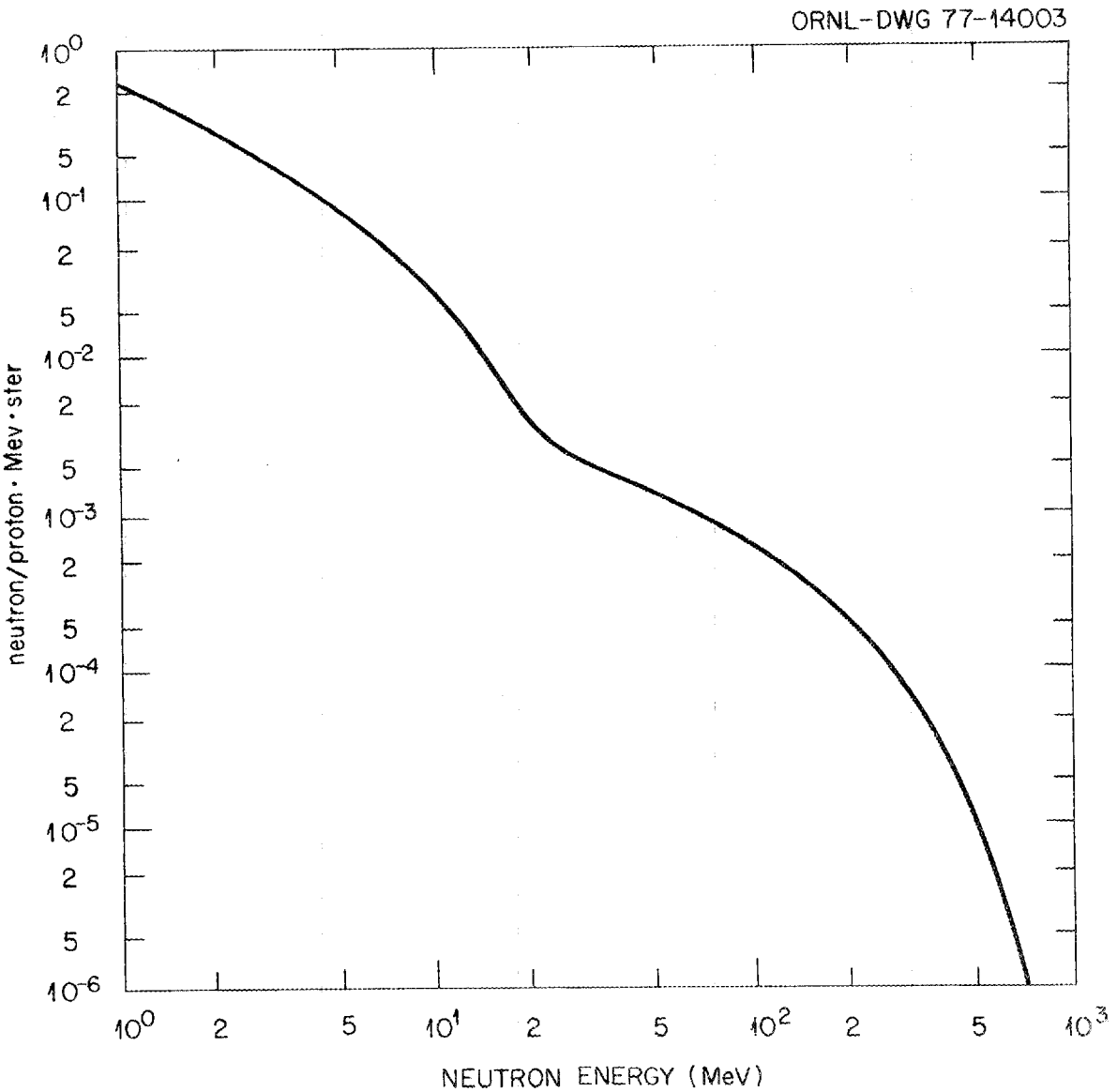

Fig. 2. Spectrum of the spallation neutron source at 90° from a 1-GeV proton beam impinging on a Pb-Bi target (taken from Ref. 10).

3. GENERAL LAYOUT OF ADLWRs

3.1 General Considerations

The volume of the target required to stop a 1 GeV proton beam and provide the spallation neutron source can, in principle, be quite small; a typical target size considered for the Intense Neutron Generator[10] is 10 cm in diameter and 50 cm in length. Heat removal considerations, however, may dictate a larger volume for the spallation neutron source. Nevertheless, the spallation neutron source may be considered as a "point source" when compared, for example, with the volume of an equal intensity fusion neutron source from magnetically confined plasmas.

There is a limit, however, on the flux of source neutrons reaching the subcritical blanket that is imposed by thermal-hydraulic considerations. The blanket (for a power reactor) is designed to have as high an energy generation per source neutron as possible. A given energy generation per neutron and a given permissible blanket power density (due to heat removal capability) dictate the maximum flux of source neutrons that is permitted to reach the blanket. Consequently, there is an upper limit to the fission power that can be generated per unit blanket surface area facing the neutron source. Therefore, the total power output the reactor is to be designed for determines the minimum total blanket surface area as well as the total intensity of the neutron source. The design variable that is at our disposal for accommodating the requirement for the neutron source intensity and the constraint on the maximum flux of neutrons incident on the wall is the distance between the source and the blanket.

3.2 Spherical Configuration

The considerations given above have a cardinal effect on the overall dimensions and geometry of the ADLWR. To illustrate this point, let us examine an hypothetical spherical reactor depicted schematically in Fig. 3. Suppose we would like the reactor to generate a power of 5000 MW (thermal).

ORNL-DWG 77-14004

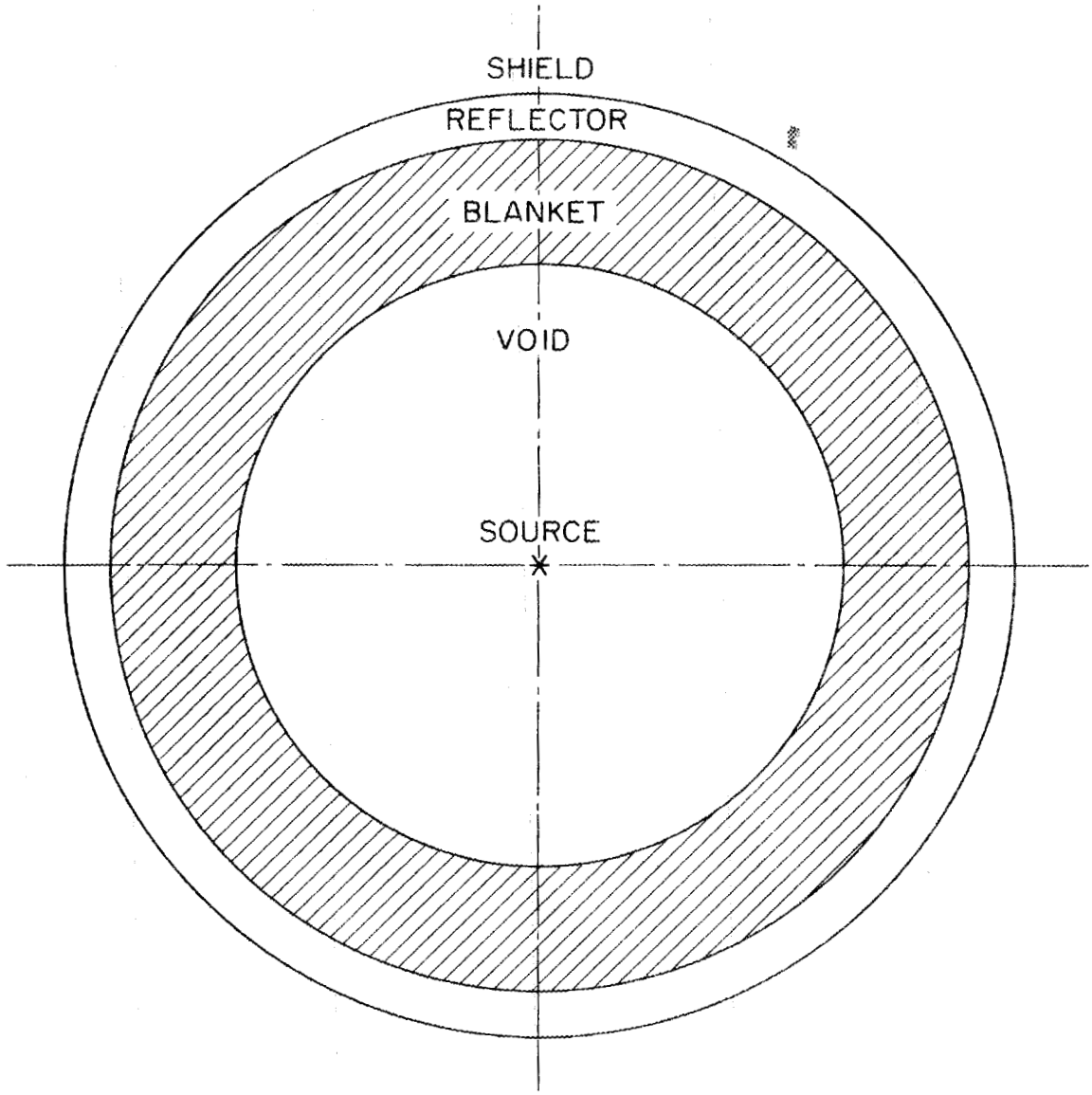

Fig. 3. A schematic layout of a spherical ADLWR.

The natural-uranium light-water blanket we propose for the ADLWR can provide (see next section) for a maximum power generation of about 4.4 kW per square centimeter of the blanket wall. To obtain this power output the blanket is to be driven by a neutron source flux of less than 4×10^{13} n/cm^2·sec. To obtain a total power output of 5000 MW the inner radius of the blanket of Fig. 3 should be at least 277 cm and the total source intensity 3.8×10^{19} n/sec.

3.3 Cylindrical Configuration

The spherical geometry shown in Fig. 3 is not a practical geometry for an ADLWR as it is not suitable for the incorporation of the light-water lattices nor does it provide a convenient access for the target assembly. A convenient geometry for the blanket is the cylindrical geometry shown in Fig. 4. This geometry can conveniently incorporate fuel rods vertically located. It also provides for a convenient access for the neutron source target assembly. A drawback of this cylindrical arrangement is that it enables neutrons to leak through the bases of the cylinder.

The larger the blanket height-to-diameter ratio, the larger is the source coverage efficiency (i.e., the fraction of the total number of source neutrons that reach the blanket). Cylindrical blankets having a high H/D ratio seems to be practical for low-power reactors, and they may also provide an attractive geometry for an ADLWR if the spallation neutron source could be designed to be elongated. For cylindrical blankets in which $H/D \gtrsim 1$, it might be possible to design blanket sections for the bases that would allow for an adequate access for the target-beam assembly. Such a solution appears to be complicated for the light-water system under consideration, however, since the bases would have a large diameter and a small thickness. The overall thickness that is necessary for a light-water blanket[7] is about 0.5 meter.

ORNL-DWG 77-14009

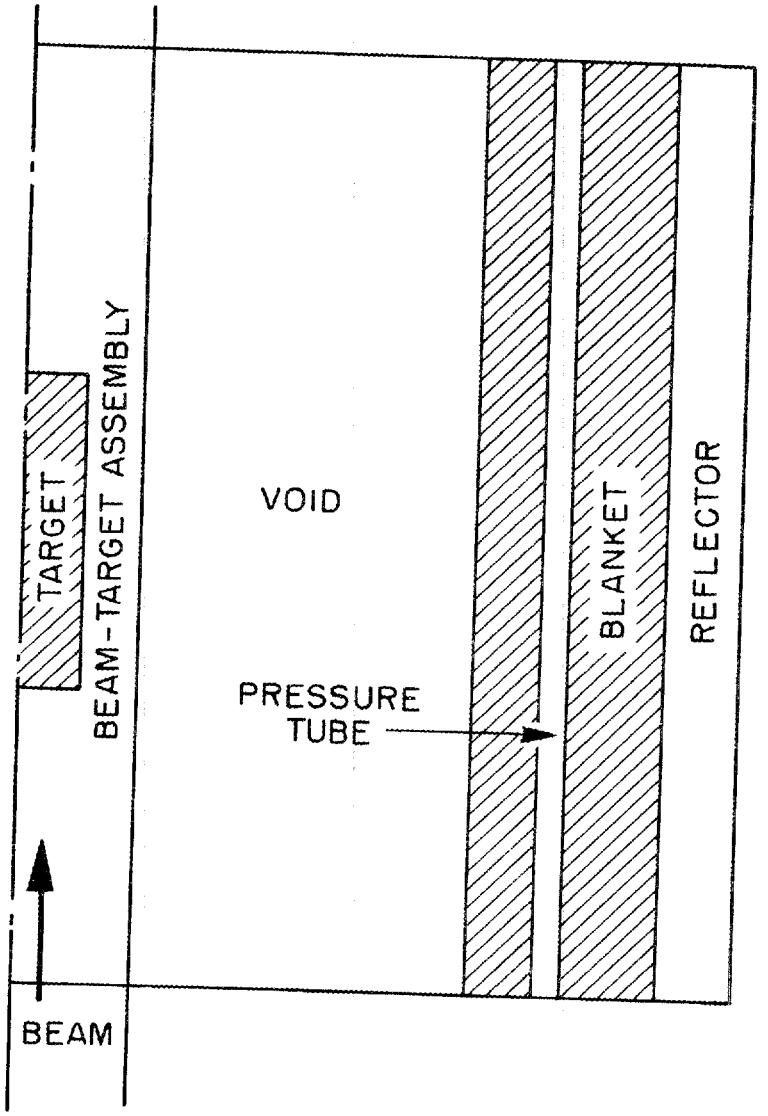

Fig. 4. A schematic layout of a cylindrical ADLWR.

3.4 Parallelepiped Configuration

An alternative parallelepiped geometry is shown schematically in Fig. 5. The advantage of this geometry is that the source is almost completely surrounded with parallelepiped-shaped blanket modules that can incorporate long fuel rods of a standard design. The details of the target assembly and beam penetration are not shown, but a parallelepiped-shaped ADLWR can probably be designed with an adequate access for the beam and target assemblies such that at least 80% of the source neutrons will be fully utilized for driving the blanket. Of the six blanket sections composing the parallelepiped reactor of Fig. 5, four are visualized to have the fuel rods vertically aligned, whereas the other two (top and bottom) are visualized to have horizontally aligned rods.

3.5 Blanket Layout

The blanket modules (or sections) can be either of a pressure vessel design or of a pressure tube design. A pressure tube design seems to be considerably more suitable for the present application for several reasons: (1) The wall of a pressure vessel separating the neutron source and the fission lattice would impair the neutron balance by capturing some of the source neutrons and degrading the average energy of the rest of them. (2) Radiation damage problems would be expected to be more severe for pressure vessels. (3) A pressure vessel design is likely to be more expensive for the ADLWR blanket geometry, which is characterized by a large surface-to-volume ratio.

It is possible to incorporate pressure tubes in the blanket in a variety of designs. Figure 6 illustrates two basic design approaches. One of the designs (Fig. 6a) uses separate water systems for the moderator and for the coolant. To accommodate the two water systems, the blanket has a calandria vessel that contains low-pressure low-temperature water for the moderator and,possibly, also for the reflector. The calandria wall has to withstand only hydrostatic pressures and can be of a small

ORNL-DWG 77-14005

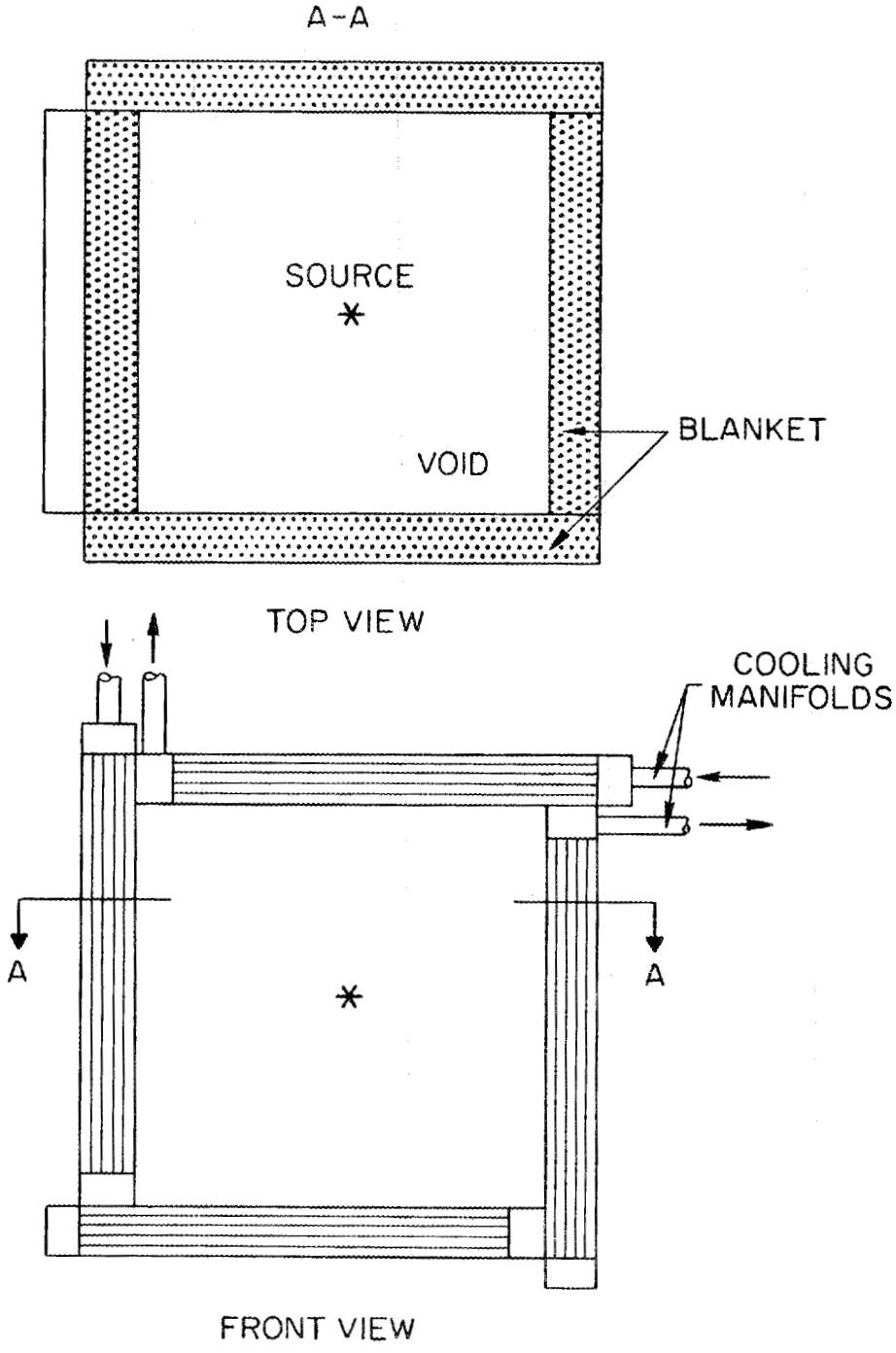

Fig. 5. A schematic layout of a parallelepiped-shaped ADLWR.

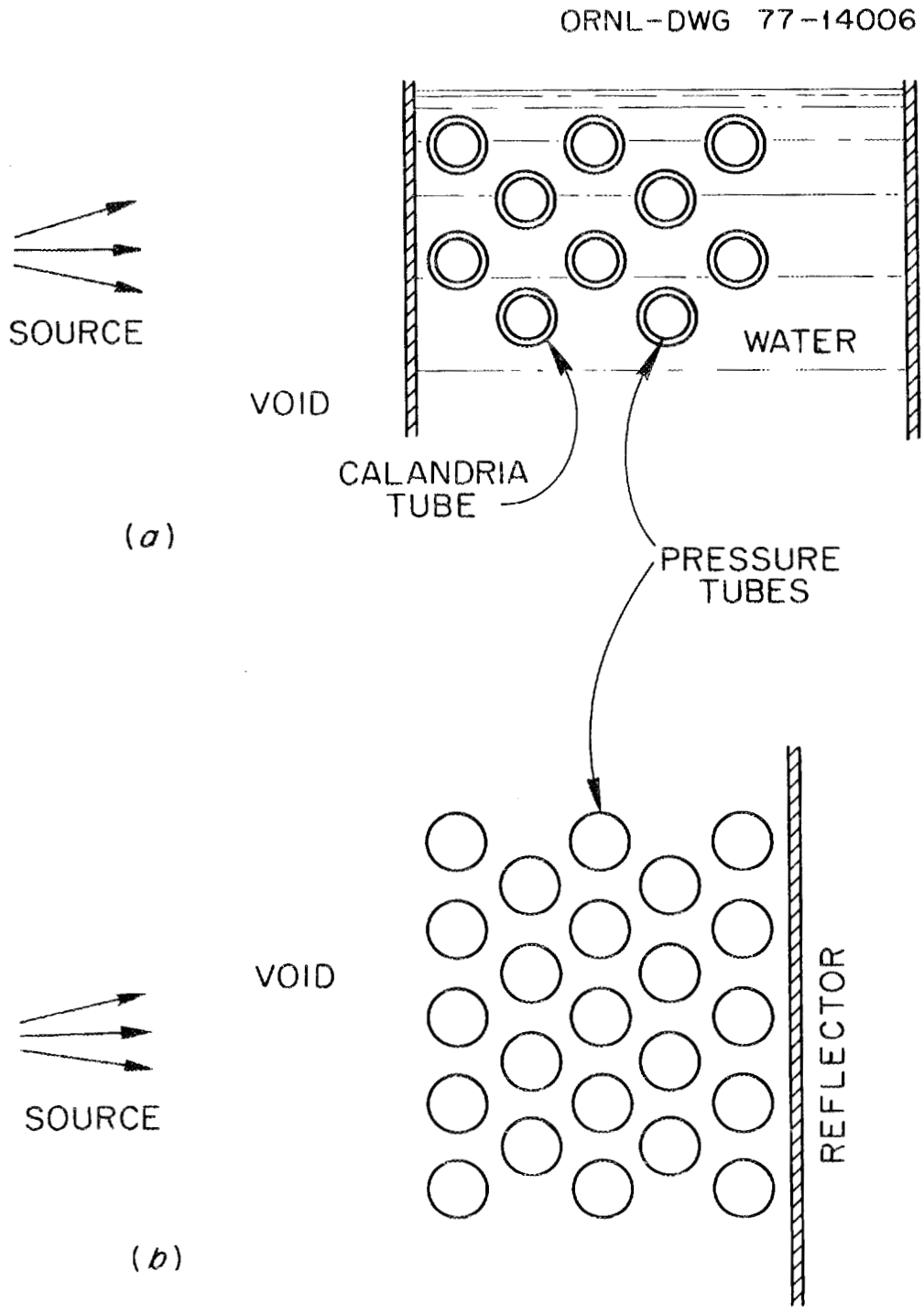

Fig. 6. Schematic layouts of ADLWR blankets having a pressure tube design.

thickness. The pressure tubes contain, in addition to the fuel, high-pressure high-temperature water. To reduce the loss of heat from the hot coolant to the cold moderator, the pressure tubes are separated from the moderator by gas gaps provided by the calandria tubes. Such an arrangement is borrowed from the design of contemporary heavy water reactors.

An alternate, more simple, design is illustrated in Fig. 6b. Here a single water system serves both the moderation and cooling functions and is incorporated within the pressure tubes. This way both the calandria vessel and the calandria tubes can be eliminated. A water reflector can be accommodated in special tanks behind the blanket or, alternatively, solid reflectors, such as graphite, can be used. The single water system pressure tube blanket design is possible because of the relatively small water-to-fuel volume ratio required for the natural-uranium light-water fission system (and especially when it is designed to be subcritical). This ratio is about 2 for the ADLWR — less than an order of magnitude from the corresponding ratio in HWRs. A possible drawback of this design is that it provides for neutron streaming paths (i.e., it is leaky).

The natural-uranium fuel for the ADLWR blanket can be designed in a variety of compositions and geometrical forms. Of the several fuel compositions examined,[9] U_3Si was found to provide a significantly better physical performance than UO_2, only slightly short of uranium metal. Metallic fuel is not compatible with a water environment and high burnup operation. Uranium silicide, on the other hand, is being developed by Canada for its heavy-water reactors. It has also been proposed to fuel certain hybrid reactors.[13] Consequently we shall evaluate the potential of the ADLWR assuming that it is fueled with U_3Si. As for the fuel geometry, it may be a single rod or a cluster of rods within a pressure tube. A cluster arrangement appears more suitable for our purpose since, among other things, it allows the structural material-to-fuel volume ratio to be reduced, as well as the number of pressure tubes per unit power output. A typical cluster may contain 37 fuel rods, such as in the heavy-water reactors of the CANDU type. The fuel cladding is assumed to be of zircaloy.

3.6 Target — Assembly Considerations

Target design questions are out of the scope of the present work. Following are several observations that might be helpful in assessing the potential of ADLWRs.

The ADLWR blanket design considerations (see Section 3.2) dictate that the blanket be significantly displaced from the target. For an ADLWR having a net power output of 1000 MWe, a typical dimension for this central cavity is of the order of 6 meters. Consequently there is plenty of space, in the ADLWR concept, for designing target assemblies that will be coupled to the blanket only via the target neutrons and the blanket will not be endangered with respect to radiation damage or heat deposition.

If efficient target designs that provide tolerable levels of radiation damage rates to the target assembly could not be found, the ADLWR configuration promises to provide relatively easy access to the target assembly to replace those assembly components that will have to function in high radiation rate areas.

With the large central cavity of the ADLWR, it is possible, and might be desirable, to design a large volume (low density) target over which the proton beam is dispersed. Another version deserving consideration is a multiplicity of targets, each designed to take a fraction of the total beam. Out of this cluster, one or more could be kept as a standby in case one (or more) unit has to go out of operation for maintenance.

Another option for the design of ADLWRs is to use a source of thermal neutrons to drive the blanket. The thermal source can be obtained by surrounding the target with a good moderator. An example for such a thermal source is the ING thermal neutron facility[10] in which a 120 cm radius heavy water moderator tank surrounds the target. The target moderator tank can also provide, in the ADLWR concept, an efficient inner reflector for the fission blanket. Another advantage that can be drawn from the inclusion of a moderator between the target and the blanket is shaping of the spatial distribution of source neutrons that reach the blanket so as to make it more uniform. Disadvantages of the moderator concept include a reduction in the blanket energy generation per source neutron (due to the elimination of the fast fission effect) and the introduction of a new element to the radiation damage problem — the radiation damage to the inner wall of the moderator tank (or to the solid moderator, if used). The first problem may be alleviated by the use of good neutron multiplying materials such as beryllium (which may serve, at the same time, as the moderator). To relieve radiation damage and cooling difficulties, and also to provide an efficient reflector, the beryllium layer could be placed adjacent to the blanket on the neutron source side.

In the following analysis it is assumed that the neutron source that drives the ADLWR is a point source located at the center of the reactor.

4. ADLWR PERFORMANCE EVALUATION

The evaluation of the performance expected from ADLWR is based on lattice and blanket neutronic studies performed in conjunction with the LWHR work.[6-9] Details of these calculations, and the assumptions used in them, can be found in the references.

4.1 Lattice Properties

Figures 7 and 8 show several neutronic properties of infinite lattices composed of natural-uranium fuel rods, 0.5 cm (or 1 cm) in radius, clad with zircaloy 6 mm in thickness. The lattices are clean (i.e., have zero burnup) and hot (the average water and fuel temperatures are, respectively, 290°C and 1000°C).

An estimation of the fission energy that can be generated in the blanket per source neutron can be obtained from the expression[9]

$$B(\mathrm{MeV}) = 200\ F = 200 \left[\frac{(1+\beta)}{2\nu} \frac{k_{eff}}{(1-k_{eff})} + \frac{\gamma}{2} \right] , \qquad (1)$$

where F is the number of fissions induced by one source neutron, β is the number of neutrons produced directly by a 14 MeV neutron while it slows down until it becomes equivalent (in its ability to induce fast fissions) to an average fission neutron, and γ is the corresponding average number of fast fissions. The lattice multiplication constant, k, was calculated with the WIMS[14] lattice code and associated cross-section library. The parameters β and γ were calculated with ANISN for homogenized blankets having the same water-to-fuel volume fraction as the lattices considered.

The results of Fig. 7 show that the UO_2 lattices provide the highest multiplication constant k (measured by m) when the water-to-fuel volume ratio is between 1.5 to 2. The contribution of the fast-fission effect (β and γ) to the blanket multiplication properties will tend to only slightly reduce the optimal water-to-fuel volume ratio. Another important

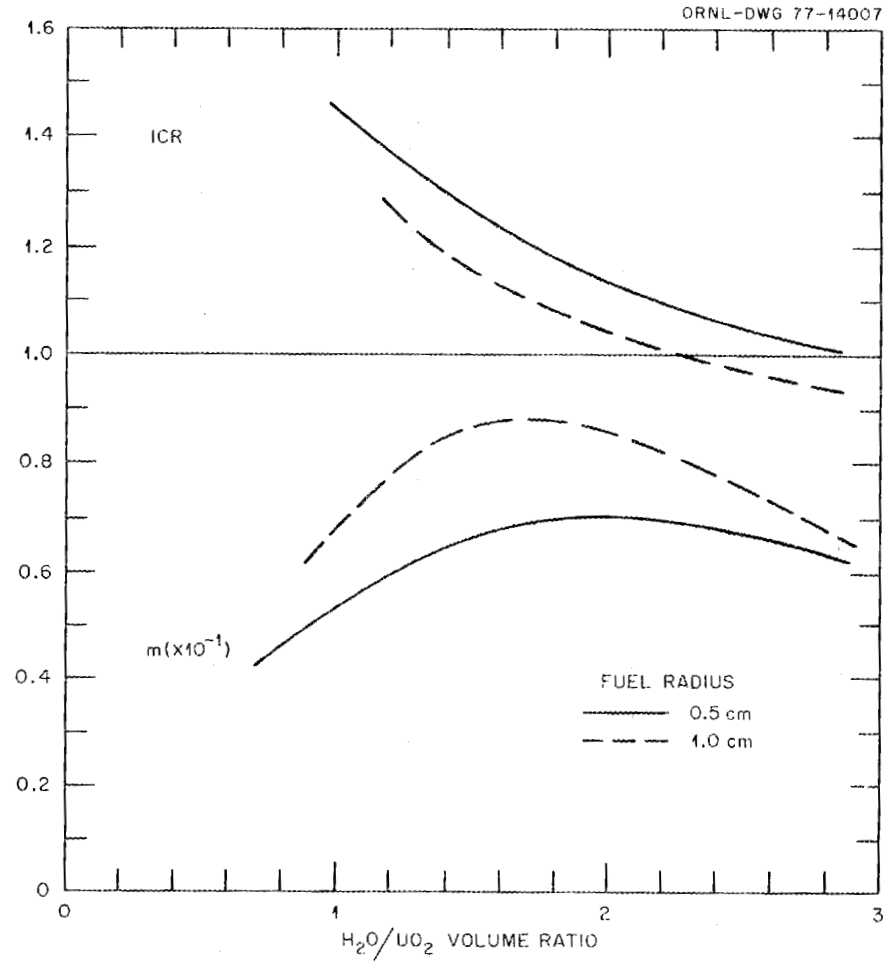

Fig. 7. Lattice multiplication [m = k/(1-k)] and initial conversion ratio (ICR) for natural uranium oxide rods in light-water lattices. Fuel is clad with 0.6 mm Zircaloy. Lattices are clean and hot ($\overline{T}_{H_2O}$ = 290°C; $\overline{T}_{fuel}$ = 1000°C).

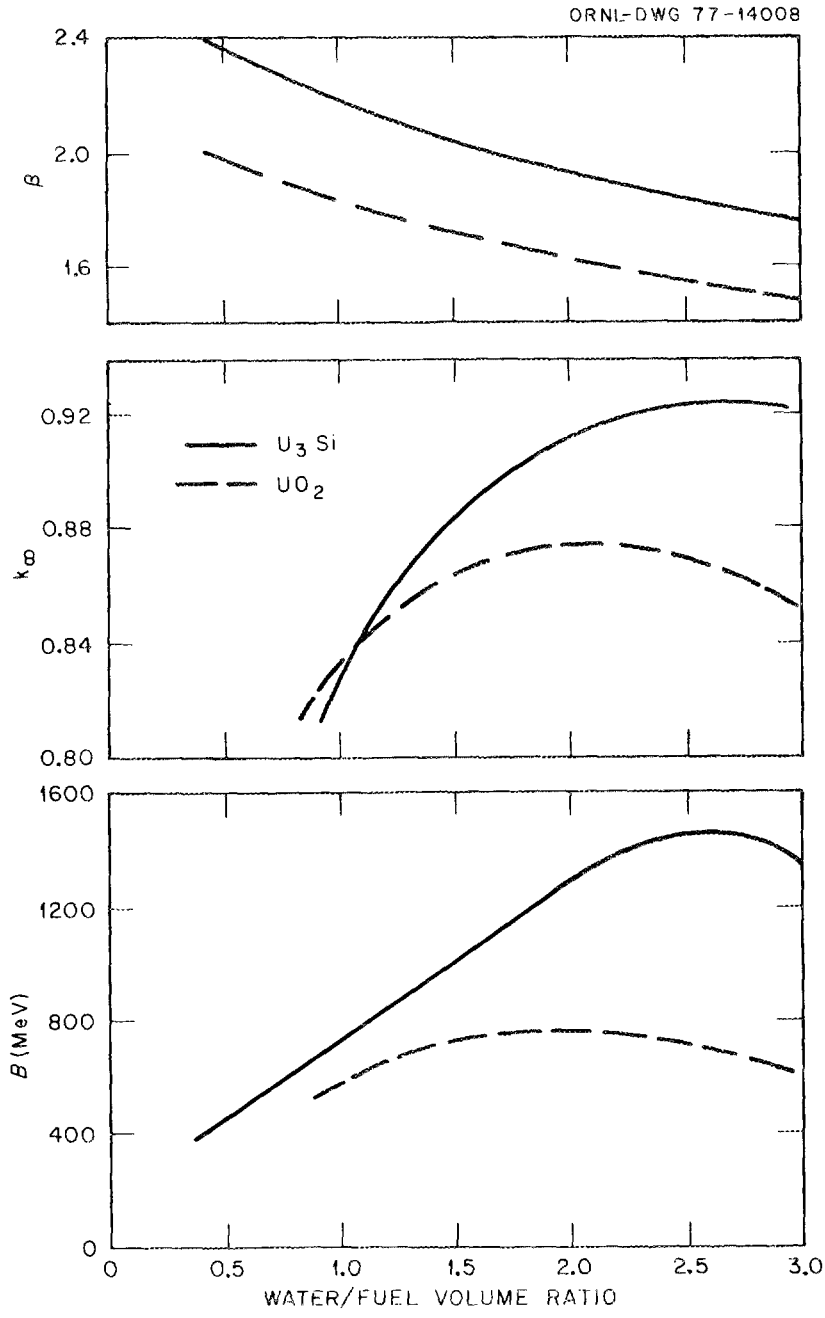

Fig. 8. Infinite multiplication constant (k_∞), fast fission effect (β) and energy generation ability (B) of light-water lattices fueled with UO_2 or U_3Si fuel rods 0.5 cm in radius and clad with 0.6 mm Zircaloy. Lattices are clean and hot ($\bar{T}_{H_2O}$ = 290°C; $\bar{T}_{fuel}$ = 1000°C).

observation is that the light-water lattice which provides the highest multiplication has an initial conversion ratio that exceeds unity. That is, we are dealing here with natural-uranium light-water systems that can breed! The question now is whether the energy multiplication provided by such lattices can be high enough to provide the basis for a viable power reactor.

LWHR blanket studies[9] have shown that the maximum multiplication of the light-water blankets is quite sensitive to the fuel material and density: the higher the fuel density and the less diluted the uranium, the higher the multiplication attainable. Figure 8 compares the multiplication properties of U_3Si and UO_2 fuel in light-water lattices. It is observed that the U_3Si fuel provides for a higher k and β, giving an overall value for B significantly higher than that of UO_2 fuel. The optimal water-to-fuel volume ratio for the U_3Si lattice providing the highest multiplication is about 2.5. We shall use this U_3Si lattice (fuel rod radius of 0.5 cm; water-to-fuel volume ratio of 2.5) for the following evaluation of the ADLWR performance.

The blanket energy generation results shown in Fig. 8 pertain to zero-leakage and clean (zero burnup) lattices. The accumulation of fission products causes a slight decline in the lattice multiplication constant with burnup. The value of the multiplication constant averaged over an irradiation cycle of 30,000 MWD/T is found to be 0.89 versus 0.92 of the clean lattice. Allowing for neutron losses not taken into account in the lattice calculations (mostly due to leakage) we estimate[9] an average blanket k_{eff} of 0.86. The corresponding values of β and γ are, respectively, 1.85 and 0.24. These give $F \approx 3.75$ fissions and B = 750 MeV per average source neutron that reaches the blanket.

It should be emphasized that 750 MeV/ neutron is not necessarily the highest energy multiplication that can be obtained from natural-uranium light-water lattices. Two ways to increase the energy multiplication are to use thicker fuel rods (like 1 cm in radius; see Fig. 7) and to reduce the effective fuel burnup to less than 30,000 MWD/T. The use

of variable water-to-fuel volume fraction blanket designs may also enable improving the blanket energy multiplication. Moreover, had we assumed that the effectiveness of an average spallation neutron in causing fast fissions is similar to that of a 14-MeV neutron (which might be even too conservative[12]), the blanket energy multiplication would have been about 50% higher than that of the reference case.

4.2 Blanket Performance

4.2.1 Maximum permissible power density

Thermal hydraulic considerations impose a constraint on the amount of power that can be removed per unit length of a fuel rod. The design linear heat rating is 530 watts/cm for HWRs of the CANDU type and 580 watts/cm for typical PWR designs. The thermal conductivity of U_3Si is superior to that of UO_2 thus enabling a higher linear heat rating. To be conservative, we shall assume for the ADLWR a maximum permissible linear heat rating of 580 W/cm. For 0.5-cm radius fuel rods this implies 740 watts per cm^3 of fuel, or 210 watts per cm^3 of the blanket (having $V_m/V_f = 2.5$).

The fission rate distribution across a water-reflected, 50-cm-thick subcritical blanket driven by a 14-MeV neutron source is shown in Fig. 9. This distribution was calculated[7] for a natural UO_2 fuel with water-to-fuel volume ratio of 1.5. It is observed that the fission density drops quite rapidly with the distance from the inner surface of the blanket, reaching a level of about 15% of the maximum. The average-to-maximum fission-rate density in this blanket is approximately 0.42. Taking this value to represent the average-to-maximum power density in the blanket (it is actually an underestimate), we find that the average blanket power density can be as high as 88 watts/cm^3. The corresponding total power generated in the blanket per unit blanket surface area is 4.4 kW/cm^2.

The average-to-maximum power density ratio across the light-water blanket (0.42) is significantly higher than similar ratios obtained for

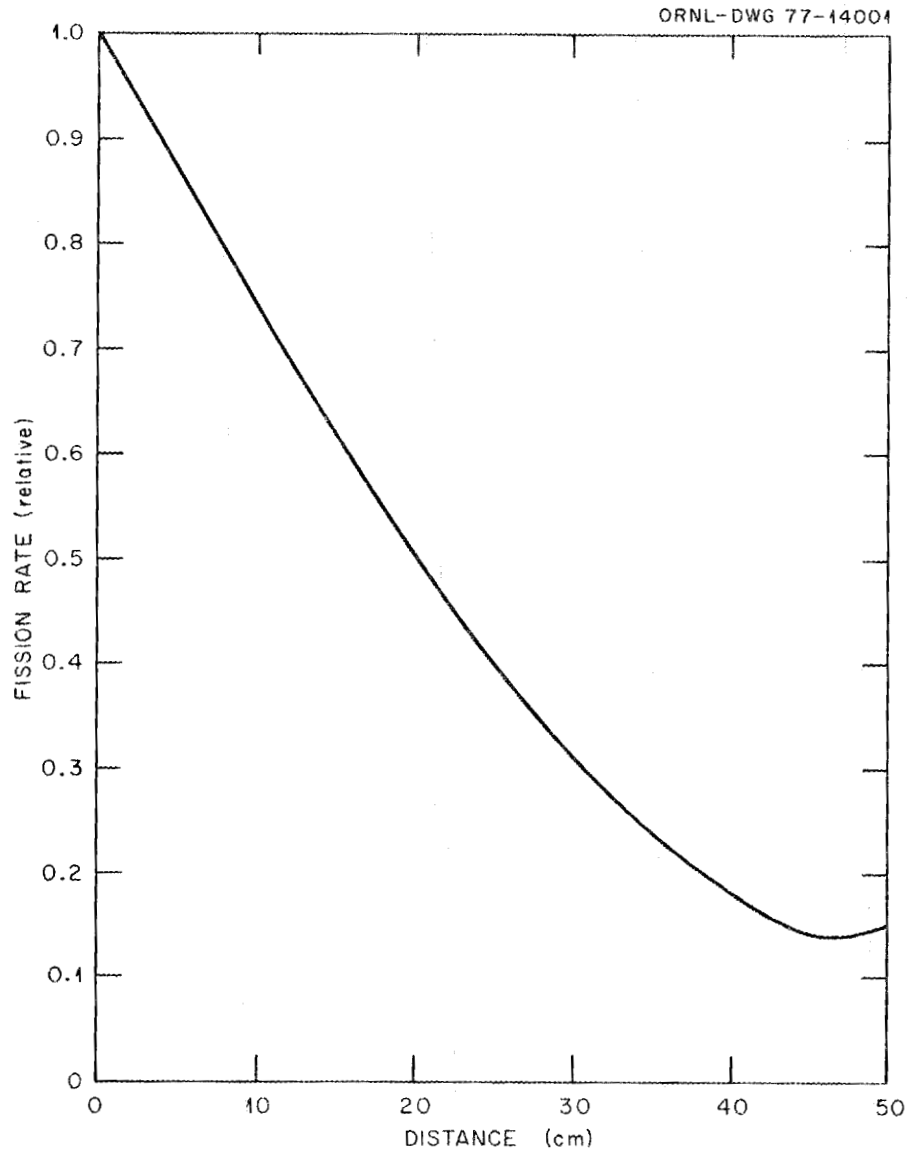

Fig. 9. Fission-rate distribution across a UO_2-fueled light-water blanket driven by a 14-MeV neutron source. Water-to-fuel volume ratio is 1.5.

several fast blankets. This is partially due to the high multiplication of the light-water blanket. It is likely that practical blankets could be designed with a somewhat higher average-to-maximum power density. The pressure tube design enables adjustment (appropriate orificing) of the water flow rate such that the coolant outlet temperature across the blanket will be similar.

4.2.2 Maximum permissible flux of source neutrons

With 750 MeV generated in the blanket per source neutron, the constraint of 4.4 kW/cm^2 of blanket wall imposes an upper limit of 3.7×10^{13} source neutrons that are allowed to reach a square centimeter of the blanket surface.

4.3 Global ADLWR Characteristics

4.3.1 Reactor energetics and blanket radius

Let us define the following symbols:

P_n [MW] — Net electrical power output the ADLWR is to supply.
P_{th} [MW] — Blanket thermal power output.
P_b [MW] — Proton beam power.
η_{th} — Net efficiency for the conversion of thermal-to-electrical energy, not including accelerator power consumption.
η_b — Efficiency for converting accelerator (electrical) power input to proton kinetic energy.
η_p — Net plant efficiency for converting the nuclear energy (including target fission energy, if any) into electricity.
m_t — Target multiplication of beam energy.
E_p [GeV] — Beam proton energy.
I_p [mA] — Beam current.
Q — Number of source neutrons produced by a beam proton.
S [n/sec] — Neutron source intensity.

S'' $[\frac{n}{sec \cdot cm^2}]$ — Maximum permissible flux of source neutrons arriving at the blanket.

P'' $[\frac{kW}{cm^2}]$ — Maximum power that can be generated per unit blanket surface area.

ε_b — Fraction of the source neutrons that reach the blanket.

R [m] — Inner radius of cylindrical blanket.

The net electrical power output is calculated from

$$P_n = \eta_{th} (P_{th} + m_t P_b) - P_b/\eta_b \tag{2}$$

where

$$P_{th} = 3.2 \times 10^{14} \varepsilon_b S F \tag{3}$$

$$P_b = E_p I_p , \tag{4}$$

and

$$I_p = 1.6 \times 10^{-16} S/Q. \tag{5}$$

The minimum inner radius of the blanket is found from the relation

$$S'' = S/[4\pi R^2 \times 10^4]. \tag{6}$$

Given the desired net power output, the above relations define S,

$$S = 3.1 \times 10^{16} P_n/[\eta_{th} \varepsilon_b F + 5 (\eta_{th} m_t - \eta_b^{-1}) E_p/Q], \tag{7}$$

from which R and the other beam and blanket parameters can be deduced.

Table 1 summarizes global parameters of a 1000-MWe ADLWR evaluated from the above expressions, using the following input assumptions:

$\eta_{th} = 0.3$ $\quad$ $F = 3.75$

$\eta_b = 0.5$ $\quad$ $E_p = 1$

$\varepsilon_b = 0.75$ $\quad$ $S'' = 3.7 \times 10^{13}$

m_t = 1 for Pb and 4 for U target.

Q = 17.5 for Pb and 42 for U target.

Table 1. Global parameters of a 1000-MWe ADLWR

Parameter		Type of target	
		Pb	U
S	(n/sec)	8.7×10^{19}	4.1×10^{19}
I_p	(mA)	790	160
P_{th}	(MW)	7785	3725
η_p	(%)	13	24
R	(m)	4.3	3.0

All the parameters of Table 1 scale linearly with the net electrical power output (under the set of assumptions used for calculating these parameters), with the exception of R, which scales like the square root of P_n. Following are several observations:

1. Uranium targets can provide for a significantly better performance of the ADLWR than a lead target. This is due both to the larger number of neutrons generated per invested beam energy and to the extra fission energy generated in the uranium target. As a matter of fact, the uranium target has a high enough self-energy multiplication to support 60% of its own power requirements.

2. The overall characteristics of the uranium-target-driven ADLWR appear to be quite reasonable. The accelerator beam current requirement is in the low range considered for accelerator-driven systems,[1-5] the efficiency for conversion of the total thermal

(nuclear) energy to electricity for sale is 80% of the thermal efficiency, and the blanket is of reasonable size — 7 meters in outer diameter (blanket thickness is 0.5 meter). Unfortunately, it might be extremely difficult to design practical targets made of uranium.

3. The performance of the Pb-target-driven ADLWR is, however, very poor. The net plant efficiency is too low to be of practical interest for electricity production. The above conclusion strongly depends on the input assumptions used. Table 2 shows the sensitivity of the performance characteristics of a Pb-target-driven 1000-MWe ADLWR to several of these assumptions. Following is a description of the cases considered:

   (a) The effective source strength of the lead target is Q = 22 neutrons per 1-GeV proton (see Sect. 2). The lead target design of Ref. 4 provides as many as 25 neutrons per 1 GeV proton.

   (b) The blanket provides 50% more energy per source neutron; i.e., B = 1125 MeV. It is possible that this energy generation capability would be provided by the reference blanket design, when the fast-fission effects of the spallation neutrons are accurately accounted for (see Sect. 4.1). Additional improvement in the blanket energy multiplication is expected by optimizing the blanket design.

   (c) The combination of assumptions (a) and (b).

   (d) In addition to (c), the beam injection efficiency is $\eta_b = 0.7$. This was the estimated efficiency of the Canadians.[2]

   (e) In addition to (d), the thermal efficiency is assumed to be $\eta_{th} = 0.35$. With the ADLWR not being limited by the

Table 2. Global parameters of a 1000-MWe ADLWR with a lead target; sensitivity to input assumptions

Parameter		Case number				
		a	b	c	d	e
S	(n/sec)	6.8×10^{19}	4.0×10^{19}	3.5×10^{19}	3.1×10^{19}	2.5×10^{19}
I_p	(mA)	490	360	260	220	180
P_{th}	(MW)	6090	5370	4760	4140	3400
η_p	(%)	16	19	21	24	29
R	(m)	3.8	3.6	3.4	3.1	2.9

criticality constraint, it might be possible to use somewhat thicker pressure tubes and increase the pressure of the primary cooling system, and consequently, the water temperature and thermal efficiency.

Of the different cases considered, the set of assumptions of Case c appears to us to be the most realistic, with cases d and e being on the optimistic side. The net plant efficiency predicted for case c is, perhaps, already in the range of interest for electrical power production (for further discussion see Sect. 5.3). The proton beam current requirement for Case c is also within the range considered[1-5] for fuel breeding applications.

Another approach for assessing the potential of accelerator-driven subcritical power reactors designed with a lead target is provided in Fig. 10. Given a lead target that provides 22 neutrons per 1-GeV proton we ask what should be the blanket energy generated per source neutron (that reaches the blanket) so as to provide a given overall net plant efficiency. Whether one could design useful blankets to provide such an energy multiplication is a question that has to be checked. In principle, one could design thermal blankets with as high an energy multiplication as desired (in the limit of a critical reactor one gets an infinite multiplication).

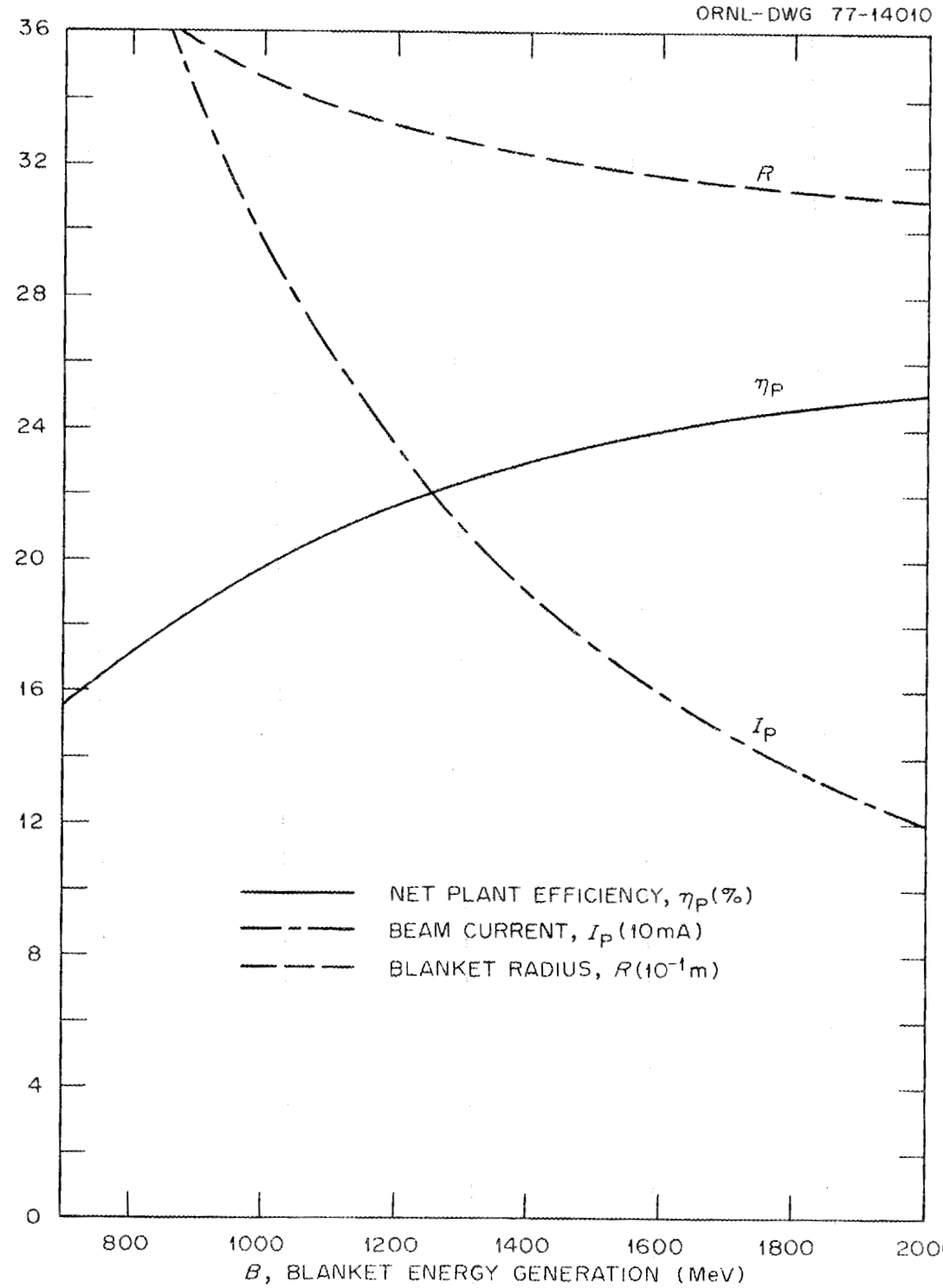

Fig. 10. Sensitivity of a 1000-MWe accelerator-driven power reactor characteristics to blanket energy generation. Target is of lead, providing 22 neutrons per 1-GeV proton.

The question is what blanket design could provide both a high energy generation rate and an attractive fuel cycle (including breeding). There is at least one thermal fission system that is known to be able to provide both requirements: that of the molten salt breeder reactor. The domain of subcritical thermal systems has to be thoroughly explored before the potential of accelerator-driven thermal power reactors could be reliably assessed.

Extending the consideration, for a moment, to blanket concepts that use thermal fission systems other than the light-water system, it might be useful to consider the effect of the system thermal efficiency on certain characteristics expected from accelerator-driven power reactors. Figure 11 shows the sensitivity of two such characteristics: the relative net plant efficiency, η_p/η_{th}, and the relative accelerator beam current. The latter is normalized to the beam current required to drive a 1000-MWe ADLWR having a $\eta_{th} = 0.3$ and $Q = 22$ (Case a of Table 2). All the input assumptions used for calculating the data of Fig. 11 are those used for Table 1 with the exception of $Q = 22$ and the values of η_{th} and B as indicated in the figure.

It is not possible to define a minimum η_p/η_{th} value beyond which accelerator-driven power reactors become useful without performing a detailed economical analysis of these reactors with the auxiliary systems (like the fuel cycle) associated with them. It is likely, however, that accelerator-driven power reactors will not become competitive with other types of power reactors when $\eta_p/\eta_{th} < 0.7$. Focusing our attention to the $\eta_p/\eta_{th} \geq 0.7$ range, we observe, from the results of Fig. 11, that the combination of thermal efficiencies and blanket energy generation that can bring us to the η_p/η_{th} range of interest is likely to be achievable with thermal fission systems of developed technologies (for further discussion, see Sect. 5.8).

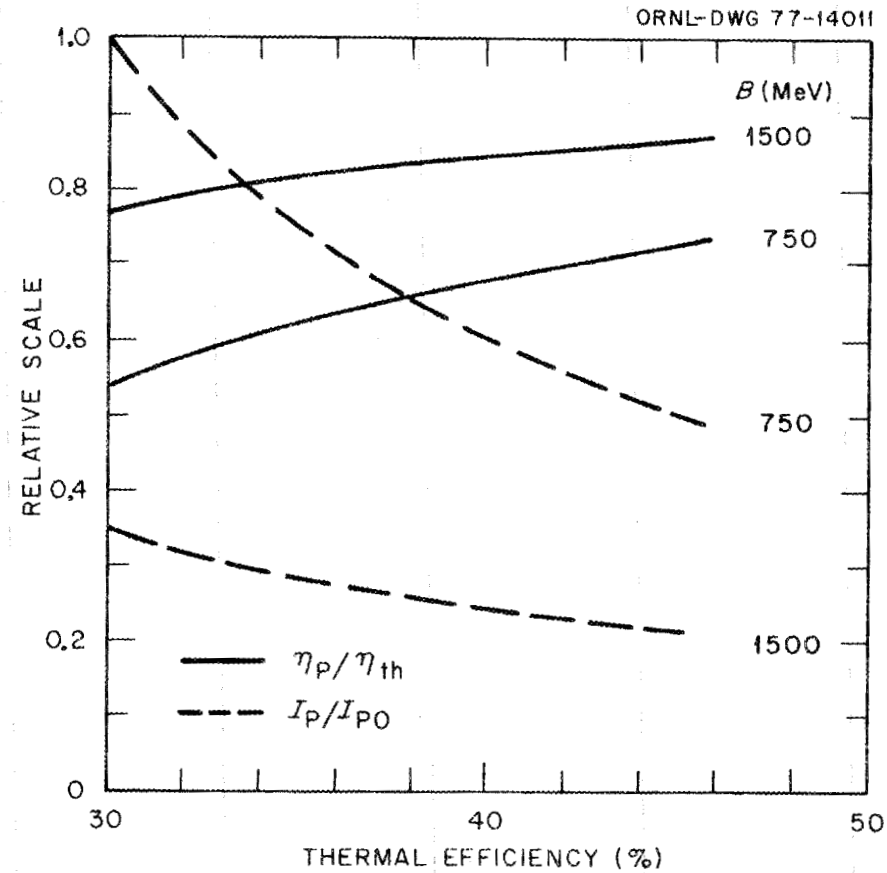

Fig. 11. The sensitivity of selected characteristics of an accelerator-driven power reactor to thermal efficiency. Target is of lead, providing 22 neutrons per 1-GeV proton.

4.3.2 Blanket length

One of the assumptions used for the calculation of all the performance characteristics of accelerator-driven power reactors is that 75% of the neutrons emanating from the target reach the blanket. We shall now briefly check the validity of this assumption and its implication. Consider a point isotropic source in the center (axis of symmetry and half-height) of a cylindrical cavity having a diameter D (corresponding to the diameter of the inner surface of the blanket). The neutrons leaving the source in the direction of the bases of the cylinder are lost (as far as the blanket is concerned). For ε_b to be 0.75, the solid angle spanned by the blanket, as viewed from the source location, should be 3π. For this to be the case the blanket length-to-diameter ratio should be 1.13. A typical blanket diameter for a 1000-MWe ADLWR is between 6 to 7 meters (see Tables 1 and 2). Consequently, the blanket length required to provide ε_b of 0.75 is of the order of 7 meters. This is a reasonable length for accommodating the pressure-tube design proposed for the blanket.

The length of the blanket determines, to a large extent, its axial average-to-maximum power distribution. For the blanket considered above (ε_b = 0.75), the average-to-maximum flux of source neutrons reaching it is 0.66. The axial average-to-maximum power density in the blanket is expected to be similar, although in real designs the neutron source will be elongated (rather than a point source) so it might be possible to optimize the ADLWR to have an even higher average-to-maximum power density.

Table 3 summarizes the values of the blanket length-to-diameter ratios required to provide a specified blanket coverage efficiency for a central isotropic point source (i.e., the fractional solid angle around the source covered by the blanket), along with the corresponding average-to-maximum axial power density. To design cylindrical shaped ADLWR blankets having a coverage efficiency exceeding 0.75 it might be desirable to reduce the designed capacity of the ADLWR so as not to have blankets too long for being practical. Thus, for example, the 7-meter-long

Table 3. Annular cylindrical blanket length-to-diameter ratio and axial average-to-maximum power density as a function of the blanket coverage efficiency

Coverage efficiency	Length / Diameter	Average/maximum axial power density
0.7	0.98	0.72
0.75	1.13	0.66
0.8	1.33	0.60
0.85	1.61	0.53
0.9	2.06	0.44

pressure tubes (and fuel) called for in the previous example considered (for a reference 1000 MWe ADLWR) can provide the modules for the blanket of a 500 MWe ADLWR having a coverage efficiency of about 0.85 (and L/D of about 1.6).

Throughout this work we have ignored the leakage of neutrons from the inner side of the blanket out through the bases of the cylindrical cavity. To cope with this problem it might be necessary to design the blanket to have a L/D ratio approaching 2 and/or to use inner reflectors. A layer of beryllium might provide for a useful inner reflector.

4.3.3 Power density and specific power

Having defined the design power density (Sect. 4.2) and the radial as well as axial average-to-maximum blanket power densities, we can compare now the average power densities and specific powers expected from ADLWRs with those obtained by conventional aqueous fission reactors. Table 4 provides such a comparison, with the ADLWR used for the reference is Case c of Table 2. The values quoted for the fission reactors are performance (or design) parameters of representative reactors of each type (taken from the IAEA Directory of Nuclear Reactors).

Table 4. Comparison of power density and specific power of ADLWR with those of LWRs and HWRs

Property	Reactor type			
	ADLWR	HWR	BWR	PWR
Average power density (kW/ℓ)				
Net[a]	140	9	45	85
Gross[b]	27			
Effective[c]	5.4	2.6	14.4	27.2
Average specific power (kW/kg^{235}U)				
Gross	5180	2640	1000	1400
Effective	1088	766	320	448

[a]Pertaining to the blanket power and volume.

[b]Pertaining to the thermal power generated in the blanket and the target and to the volume of the cylinder defined by the outer boundary of the blanket.

[c]Similar to *b* but related to the net electrical plant power output.

The "net" power density in the table is the ADLWR blanket power averaged over the actual blanket volume whereas the "gross" power density pertains to the total volume encompassed by the outer boundary of the blanket (including the central cavity with the target assembly). The latter provides an indication on the total size of the power source (the volume that has to be enclosed by the reactor shield) of the different reactors normalized to the same thermal power output. The "effective" average power density, as well as the effective average specific power, pertains to the net electrical power output. In estimating the effective values we assumed overall plant efficiencies of 0.21, 0.29, and 0.32 for, respectively, the ADLWR, HWR, and LWRs.

It is observed that the overall volume required for an ADLWR core (blanket + target assembly) is only about half of the volume of the core

of HWR for the same net electrical power output (or of any fission-only power reactor type fueled with natural uranium). It is three to five times larger than that required for LWRs. Had we used the more optimistic ADLWR parameters of Case e, Table 2, we would have obtained an effective average power density of 8.4 kWe/ℓ. This is three times higher than that of an HWR and less than a factor of two smaller than that of a BWR.

The high net average ADLWR power density is due to the smaller moderator-to-fuel volume ratio required for the ADLWR lattice. The maximum design power per unit volume of the fuel for the ADLWR (and consequently also the design linear heat rating and heat fluxes) was taken to be the same as for the LWRs. The safety aspects of the ADLWR blanket, as far as loss-of-coolant accidents are concerned (the ADLWR can never have a criticality accident), are expected to be comparable to those of pressure tube fission reactors, such as the HWRs; the coolant-to-fuel volume ratio in HWRs is about 0.5. The ADLWR blanket design could provide for a higher coolant-to-fuel volume ratio (up to 2.5:1) if so desired.

The effective average specific power of the ADLWR is expected to be higher than that of all fission-only reactors considered (see Table 4); it would be 1/3 to 1/2 of the effective average specific power of LWRs and significantly smaller than that of fission-only breeding reactors.

4.4 On the ADLWR Fuel Cycle

4.4.1 The ^{238}U–Pu fuel cycle

The variation, with burnup, of the fissile fuel content of several of the light-water lattices considered above is shown in Fig. 12. (All of the burnup calculations were performed with the lattice code WIMS[14].) Even though the calculations pertain to an infinite lattice and do not take into account the direct effects of the source neutrons, nor spatial effects, we expect that the results of Fig. 12 are indicative of the average behavior of the ADLWR fuel with burnup.

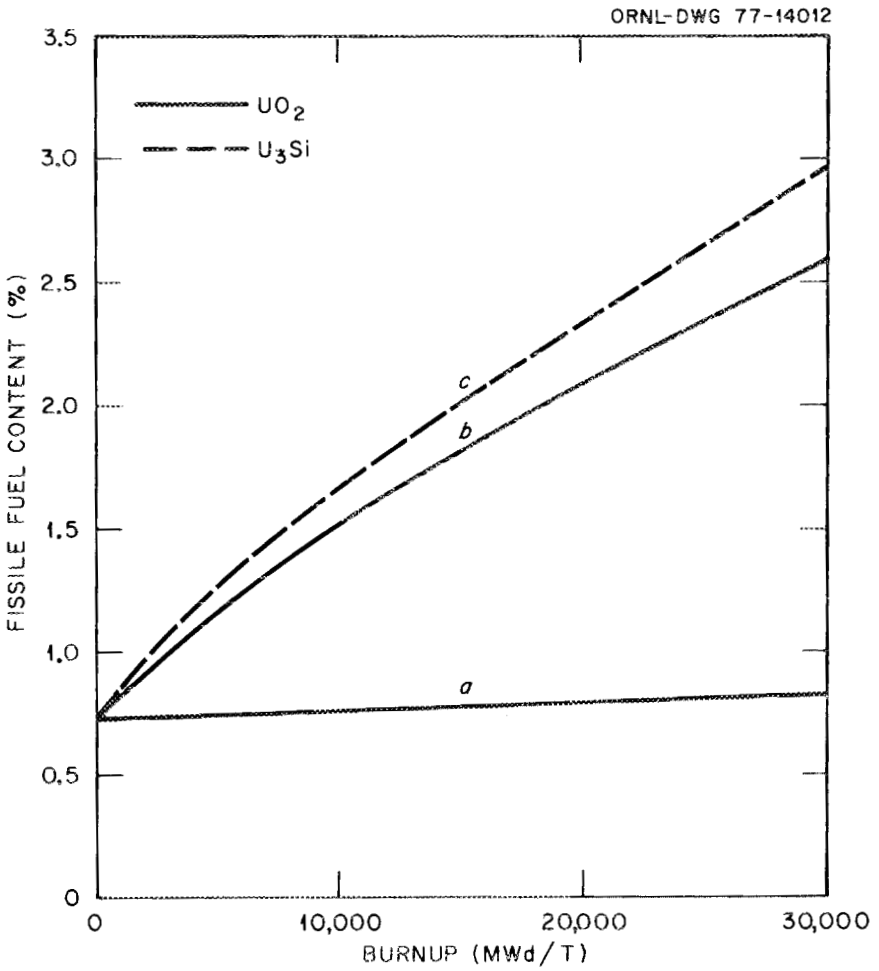

Fig. 12. Variation of the fissile-fuel content of several light-water lattices with burnup. Fuel rods are 0.5 cm in radius and clad with 0.6 mm Zircaloy. Water-to-fuel volume ratio is (a) 1.5, (b) 0.5, and (c) 0.5.

It is observed that the fissile fuel content of the UO_2-H_2O lattices having the highest multiplication remains, essentially, constant throughout an irradiation cycle (assumed to be limited, by mechanical and metallurgical consideration, to 30,000 MWD/T, as for LWRs). In other words, the light-water natural-uranium system possesses a particularly interesting feature: the equilibrium fissile-fuel content of light-water lattices that provide the highest multiplication is just about the ^{235}U content of natural uranium. A similar behavior is expected for the U_3Si-fueled light-water lattices. By varying the water-to-fuel volume ratio, it is possible to adjust the equilibrium fissile-fuel content. Figure 12 provides an example of two lattices having a water-to-fuel volume ratio of 0.5. It is seen that the fissile fuel content keeps increasing with irradiation, approaching 3% (and not leveling, yet) for burnup of 30,000 MWD/T. In the following we shall concentrate on the light-water lattices in which the equilibrium fissile fuel content is that of ^{235}U in natural uranium (i.e., the lattices providing for the highest multiplication considered in Sects. 4.2 and 4.3). These lattices enable the design of particularly interesting fission systems: Fuel-Self-Sufficient (FSS) power reactors.

FSS-ADLWRs have an average breeding ratio of unity. However, since they are fueled with natural uranium, they have no doubling-time limitation on the rate of introduction of the ADLWRs into the power system.

These FSS-ADLWRs require a very simple fuel cycle to support them. Starting with natural uranium, the fuel is irradiated in the blanket until it reaches (perhaps after several shufflings) the burnup limit of 30,000 MWD/T. After an adequate cooling period the fuel undergoes partial reprocessing to extract the fission products that contribute the most to the parasitic neutron capture. The actinides and some of the fission products can be left with the fuel. The mixed uranium-plutonium fuel (with some natural uranium makeup) is then refabricated into a new fuel loading for FSS-ADLWRs. This sequence of functions can, in principle, be repeated indefinitely, thus providing for the full utilization

(excluding losses during fabrication, and due to transmutations) of the energy content of the uranium ore.

The variation of the multiplication constant with irradiation in the FSS-ADLWR mode of operation described above is shown in Fig. 13 for three consecutive irradiation cycles. The only change in composition between the end of one cycle and the beginning of a new cycle is the removal of the fission products. We find that the evolution of the multiplication constant during the third and following cycles is almost identical to its evolution during the second cycle. The value of k averaged over the second (and following) cycles is very similar to the first cycle k average. The isotopic composition of the plutonium reaches equilibrium with a relatively high concentration of the non-fissile isotopes. The physical performance of the FSS-ADLWR with fuel that has undergone a large number of irradiation cycles (leading to the accumulation of the transplutonium isotopes) will have to be carefully examined. The results of the present study (Fig. 13) indicate that the energetics of the FSS-ADLWR is, on the average, independent of the irradiation cycle. In other words, an FSS-ADLWR designed to provide a given power output when fueled with natural uranium, will provide the same power when fueled (using the same geometry and spacing of fuel rods) with fuel that has undergone irradiation in the same type of reactor. By partial refueling and/or fuel shuffling operations it will be possible to reduce the maximum-to-average multiplication of the fuel during an irradiation cycle and to maintain a close to constant power output without resorting to parasitic neutron absorption or variation of the accelerator neutron source intensity.

Figure 14 shows, schematically, the fuel cycle that is required to support a nuclear power economy that is based on the FSS-ADLWRs described above and compares it with the fuel cycle for a power economy based on LWRs. Following is a summary of fuel-cycle-related features of FSS-ADLWRs:

(1) The FSS-ADLWR enables a full utilization of the uranium resources (as good as any "pure" fission breeder).

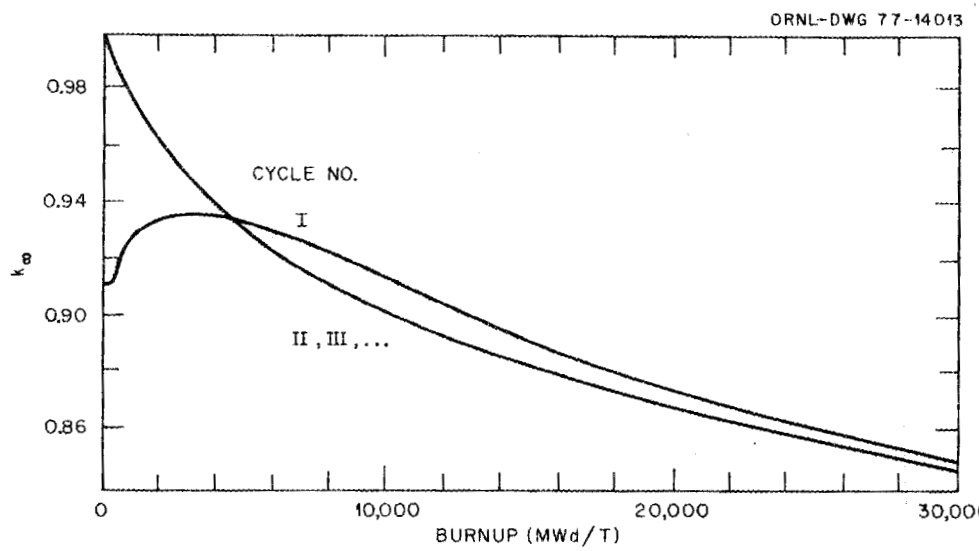

Fig. 13. Variation of the infinite multiplication constant of U_3Si-H_2O lattices (moderator-to-fuel volume ratio is 2.0) with burnup, for first three consecutive irradiation cycles. Fission products are extracted in between irradiation cycles.

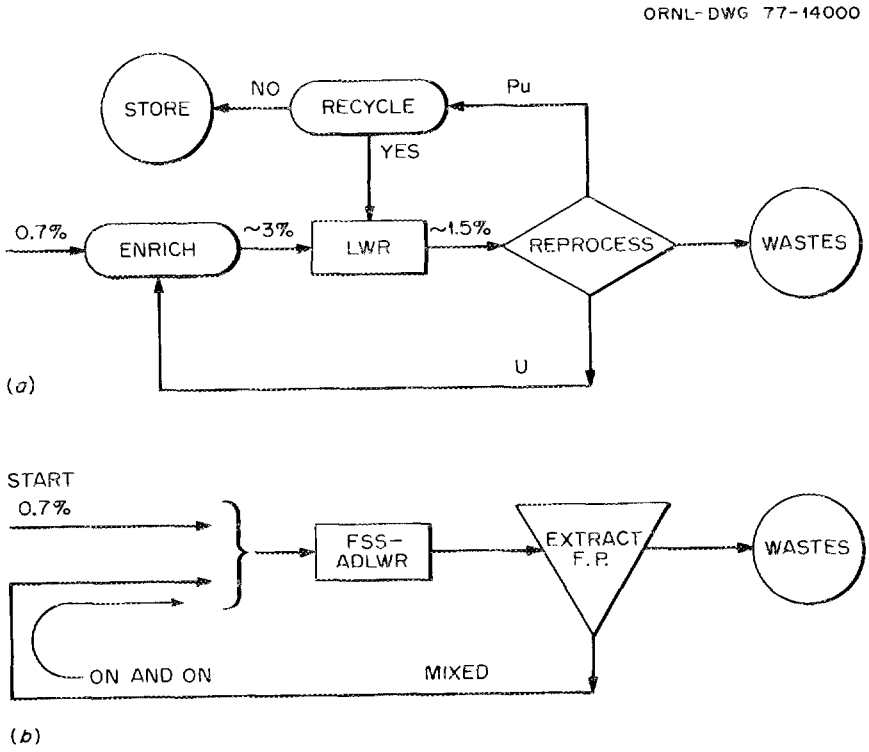

Fig. 14. A schematic description of a fuel-cycle for a nuclear power economy based on the fuel-self-sufficient ADLWR compared with the fuel cycle for conventional LWRs.

(2) It relies on the most developed fission reactor technology — that of LWRs and HWRs.

(3) The fuel cycle needed to support FSS-ADLWRs is simple and safe, as explained in points (1) - (2):

(4) It enables the utilization of all the plutonium generated in the fuel without the need to separate the plutonium (by using co-processing), to accumulate plutonium, or to handle plutonium at high concentrations.

(5) It is free from the need for uranium enrichment. Points (4) and (5) imply that in the FSS-ADLWR system envisioned, there is no need to generate or to handle fissile fuel at concentrations higher than the concentration of ^{235}U in natural uranium.

Therefore:

(6) It is amenable to an effective safeguards control system.

(7) Under no credible circumstances can there be a criticality accident in the FSS-ADLWR or in its fuel cycle (the effective multiplication constant of natural-uranium-like fuel with light water cannot reach unity in any combination).

(8) The hazards of plutonium toxicity accidents is reduced.

4.4.2 On the use of depleted uranium

Is it possible to utilize depleted uranium (huge stockpiles of which have already been accumulated) directly in the FSS-ADLWR? In principle all source-driven reactors can be fueled with depleted uranium. The energy multiplication of the depleted-uranium-fueled reactor will initially be pretty low (relative, say, to that obtained from the natural-uranium light-water blankets). With operation, the plutonium content in the fuel

will build up and the blanket energy multiplication will correspondingly increase. Different blanket concepts vary with respect to the initial energy multiplication they provide when fueled with depleted uranium, the level of the equilibrium fissile fuel content and the corresponding energy multiplication, and the rate of buildup of the fissile fuel content.

Figure 15 shows the variation with burnup of the effective multiplication constant (leakage is taken into account by assuming a geometric buckling of 0.0004 m^2 in the lattice calculations) of depleted-uranium-fueled light-water lattices (in the form of UO_2 rods, 0.5 cm in radius, with a water-to-fuel volume ratio of 1.5) with burnup. It is observed that k_{eff} reaches an asymptotic level of about 0.81, which is just about (see Fig. 15) the k_{eff} value at the end of the irradiation cycle (30,000 MWD/T) of the same blanket fueled with natural uranium. This asymptotic value is approached already at low burnup levels (e.g., at 4000 MWD/T, k_{eff} already assumes the end-of-cycle value of 0.81). This phenomenon is another reflection of the distinguishing property of subcritical light-water thermal systems - that of having a low equilibrium fissile-fuel content.

The equilibrium fissile-fuel contents of different fast-fission systems are about an order of magnitude higher than that of our light-water system. When fueled with depleted uranium, the fissile fuel content of these fast blankets will keep increasing throughout the life of the fuel, causing the power output to increase correspondingly.[13] Such a behavior causes several practical difficulties: either one needs to install a large capacity (corresponding to the end-of-life power generation ability) of heat removal and energy conversion equipment which will be only partly utilized throughout most of the cycle, or one will have to operate the system with frequent partial refueling so as to maintain relatively small fluctuations (of k_{eff} and B) around the average.[4] In addition, the plutonium content in these systems can build itself to above critical concentrations.

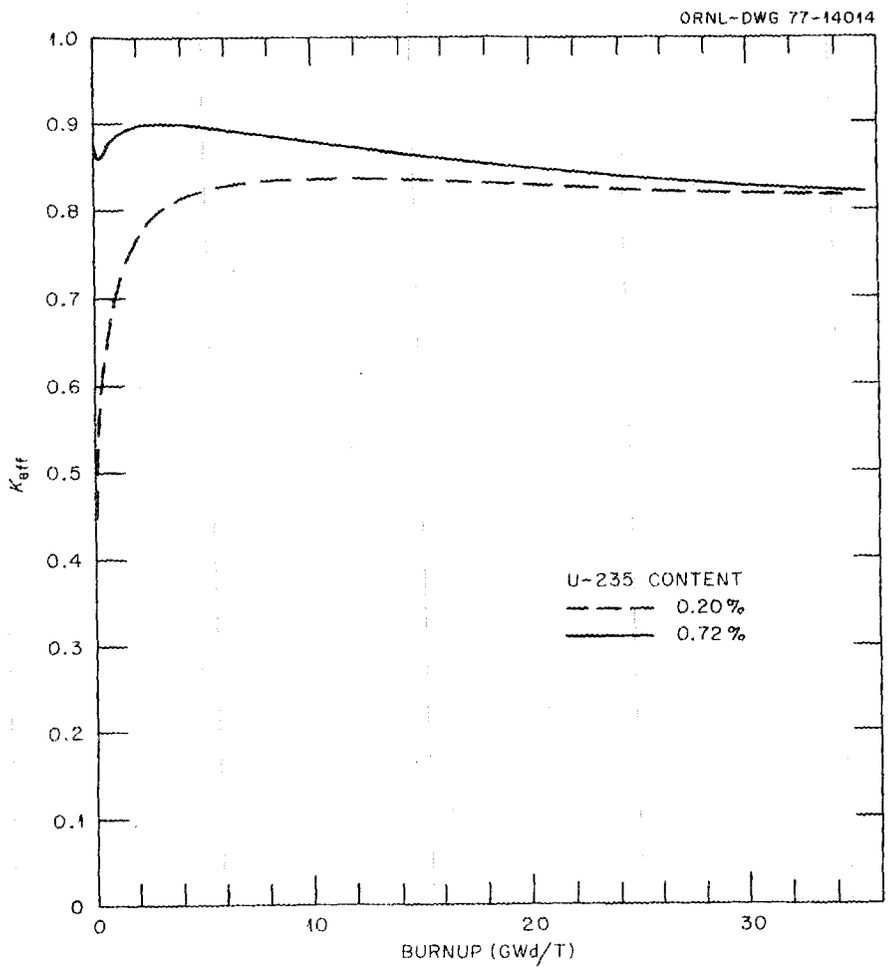

Fig. 15. The variation of the effective multiplication constant of depleted-uranium (UO_2) fueled light-water lattices with burnup. Fuel is 0.5 cm in radius and clad with 0.6 mm Zircaloy; V_m/V_f = 1.5; geometric buckling = 0.0004 m^{-2}.

Another approach for the utilization of depleted uranium in an FSS-ADLWR is to use it for the makeup fuel; suppose the blanket is loaded, initially, with natural uranium. During the first irradiation cycle about 3% of the fuel is being consumed and some (of the order of another 1%) is being lost during reprocessing and refabrication. Using depleted uranium for the fuel makeup is not expected to hurt the reactor performance. On the contrary – it might be beneficially used to reduce the relatively high multiplication constant at the beginning-of-life of the FSS-ADLWR blanket that is loaded with recycled fuel (see Fig. 13, cycles II and III). Different combinations of the two approaches described for the use of depleted uranium are of course possible and may provide the optimum performance.

4.4.3 On the thorium and denatured fuel cycle

Recently there is an increased interest in the possiblilty of using the thorium fuel cycle, or the "denatured" version of this cycle, for (a) improving the nuclear fuel utilization, and (b) reducing the hazard of diversion of fissile fuel for weapons applications. What performance characteristics may be provided by FSS-ADLWRs that use thorium fuel cycles? Detailed numerical calculations are required for reliably answering this question. These are beyond the scope of the present work. Following, nevertheless, are some qualitative expectations based on general reactor physics considerations.

A critical LWR based on the Th-^{233}U fuel cycle is known (see, for example, reference 15) to have a higher conversion ratio than a corresponding LWR that is based on the ^{238}U-Pu fuel cycle. This is due to the higher η (for thermal neutrons) of ^{233}U relative to ^{239}Pu (as well as to ^{235}U). To make a light water system to be fuel-self-sufficient (i.e., CR=1), one needs to increase the probability for neutron absorption in the fertile isotopes relative to the fissile ones. Such a change in the relative absorption probability leads to a reduction in k_∞. The closer the critical reactor CR is to unity, the smaller will be the reduction in k_∞. Consequently, we expect that k_∞ of a fuel self-sufficient ADLWR blanket based on the Th-^{233}U fuel cycle will be higher than that of an ADLWR blanket that uses the ^{238}U-Pu fuel cycle. The probability that the

energetic source neutrons will induce fast fissions (and other neutron multiplying reactions) while they slow down to fission-neutron-like energies will, however, be smaller for thorium systems as compared with uranium systems. As the thermal blanket under consideration does not rely heavily on this direct fast fission effect (in contradiction to the fast blankets[13]), it is not unlikely that the over all energy that can be generated per source neutron in a ADLWR blanket using the Th-^{233}U fuel cycle will be comparable to that generated with natural uranium.

The ADLWR concept is expected to provide an interesting system for the denatured fuel cycle. In this cycle ^{238}U is added to the fuel to provide a given (less than 20%[15]) ratio of ^{233}U/^{238}U. The equilibrium ^{233}U content in the fuel of the ADLWR is expected to be lower than the ^{233}U content of LWRs. Therefore, the ^{238}U/Th ratio in ADLWRs will also be lower than in LWRs and so will be the rate of production of ^{239}Pu (or the rate of production of ^{239}Pu/^{233}U). Moreover, the plutonium concentration in the ADLWR blanket will establish an equilibrium level which is expected to be pretty low - even lower than the plutonium concentration in FSS-ADLWRs that use the ^{238}U-Pu fuel cycle.

In conclusion, a nuclear power system consisting of FSS-ADLWRs that use a thorium fuel cycle promises to provide an interesting combination of features and therefore deserves a close examination.

5. DISCUSSION

5.1 Economical Considerations

The ultimate criterion to judge the viability of the ADLWR with is the economical criterion. It is premature to perform an economical analysis before completing a more thorough feasibility study or, more desirably, a conceptual design of an ADLWR power plant. The major unknowns for an economical analysis are associated with the cost of the neutron source, including the accelerator, target assembly and associated auxiliary systems (s.a. target cooling system). It might be instructive, nevertheless, to compare, qualitatively, several cost components of the ADLWR with those of HWR. Both reactor types are fueled with natural uranium and use a pressure-tube design.

For a given power output, the overall size of the ADLWR core (i.e., blanket outer dimensions) was estimated to be smaller than that of a HWR (by about a factor of two, see Sect. 4.3.3). Consequently, the capital investment in the ADLWR excluding the accelerator and target assembly is expected to be smaller than that of the capital investment in a HWR, excluding the cost of the heavy-water inventory. The latter provides an additional saving component in the capital investment of ADLWRs.

Consider next the fuel cycle costs. Here also the ADLWR has economical advantages associated with two factors: In the ADLWR it is possible to extract (1) four times as much energy per fuel rod in one irradiation cycle (this is about the burnup ratio), and (2) over 50 times more energy per unit weight of natural uranium mined (not considering the possibility for the utilization of depleted uranium). Even though at present the overall savings in the fuel cycle cost is not large compared with the savings in the capital cost, the fuel cycle cost component is expected to become of much significance when the cost of uranium ore increases (with the forecasted depletion of rich uranium mines).

Could the combined savings in the capital cost and fuel cycle cost of an ADLWR, relative to a HWR, compensate for the extra expenses associated with the construction and operation of the neutron source required to drive the ADLWR? At the present state of our knowledge it is not apparent that the answer is negative. Considering the benefits potentially provided by the FSS-ADLWR, it appears to be justified to embark upon a thorough feasibility study of this reactor concept. One of the outcomes of such a study might be a determination of the combination of performance parameters and accelerator and target assembly designs that can provide for an economically attractive ADLWR. This information can provide a useful guide for the development of adequate neutron sources for ADLWR applications.

5.2 Alternative Neutron Sources

The attractive fuel cycle characteristics offered by the FSS-ADLWR can become available, in principle, by neutron sources of an origin other than high energy accelerators. Fusion devices may provide useful alternative neutron sources. The prospects of natural-uranium light-water fusion-fission hybrid reactors were found[6-8] to be very interesting. Each of the neutron sources, that of accelerator origin and that of fusion origin, has its own advantages and disadvantages (see Sect. 2). We shall not make here a detailed comparison of the two types of neutron sources for the application under consideration. Suffice it to say that the potential availability of an alternative type of neutron source adds to the justification for early consideration of source-driven fission power reactor concepts as one of the possible alternatives for the breeding fission reactors of the future.

5.3 Plant Efficiencies

One of the potential drawbacks of all accelerator driven fission systems is their smaller value of plant efficiencies, compared with those of the corresponding fission-only reactors. The reduction in plant efficiencies results from the power that has to be invested for operating

the accelerator. The consequences of a reduced plant efficiency are primarily economical and environmental thermal-pollution issues.

The development of uranium targets (that provide for the lowest beam energy investment per source neutron produced) could make an important contribution to the reduction of the accelerator energy requirement. This might be a "mission impossible," but deserving consideration. Additional effective means for increasing the plant-to-thermal efficiency ratio (η_p/η_{th}) are the design of blankets that can provide for high energy generation per source neutron and/or higher thermal efficiencies, as well as the development of accelerators having an electrical-to-beam energy conversion efficiency of $\eta_b > 0.5$.

Another implication of the reduced plant efficiencies of accelerator-driven systems as compared with critical systems is that it might be economically attractive to design the former as dual-purpose power reactors (providing both electricity and process heat) or, perhaps, even to design them primarily for process heat.

In comparing the overall energy balance of a power system based on FSS-ADLWR with that of other power systems one should take into account the energy that has to be invested in the fuel cycle and even in the construction of the facilities of the power system. Consider, for illustration, two examples — a power system based on current LWRs and a power system based on the symbiosis of Accelerator Driven Fuel Factories (ADFF) and conventional LWRs.

Compared with the ADLWR fuel cycle, the LWR fuel cycle has an extra energy investment primarily in the mining through the enrichment stages. As for the symbiosis system, consider, for example, a power system consisting of the ADFF considered in Ref. 4 and LWRs of conventional design being run on the ^{238}U-Pu fuel cycle. Carrying out the total energy balance for a system being supported by, say, a 300 mA 1 GeV proton accelerator, one finds that the overall efficiency for the conversion of the fission energy into electricity is about 14% or 19%

when the ADFF is based on the LMFBR blanket of reference 4 (reference case) when the accompanying LWRs are being run, respectively, without recycling and with recycling. The corresponding numbers for an ADFF based on the GCFR blanket[4] are 22% and 25%. These efficiencies are to be compared with a plant efficiency of about 21% which we expect to be attainable from a FSS-ADLWR that uses a lead target (Case c of Table 2). Taking into account the extra energy that one has to invest in the fuel cycle of the symbiotic system (as it has more stages as compared with the FSS-ADLWR fuel cycle), as well as in the construction of the symbiotic power system (that is likely to have more redundancy in components and equipment relative to a system consisting of accelerator-driven power reactors), will make the energy balance of the FSS-ADLWR even more favorable than that of the symbiosis considered.

The above comparison will do injustice to the symbiotic approach without mentioning the fact that one can conceive of symbiotic power systems[4] based on the same ADFF considered but on high-conversion ratio fission power reactors, the overall energy balance of which is considerably more favorable than that of the systems considered above.

5.4 Excess Neutrons

In the cylindrical-blanket ADLWRs conceived, about 25% of the accelerator-produced neutrons do not reach the blanket. It might be possible to utilize part of the excess neutrons (that will, otherwise, reach the bases of the central cylindrical cavity) for a variety of industrial applications that could improve the overall economics of the ADLWRs.

One of the potential applications for the excess neutrons is the transmutation of the long-lived fission products and actinides.[16] (From the ADLWR and, possibly, other fission reactors). The very high neutron fluxes available near the target assembly and the relatively easy excess to and ample space near the target may be very useful for

such an application. It ought be emphasized that this application will not interfere at all with the ADLWR blanket performance.

5.5 Safety and Environmental Considerations

As far as criticality is concerned, the ADLWR is absolutely free from the hazard of criticality accidents (see Sect. 4.4.1). Being of a pressure-tube design, the ADLWRs are also free from the hazards of pressure vessel breakdown. With regards to loss-of-coolant accidents, the safety of ADLWRs is comparable with that of other pressure tube designs much as HWRs and SGHWRs.

The neutron source system of the ADLWR adds its own safety issues. These are associated with the very high power densities in the accelerator beam and in the target. The safety problems associated with these high power densities are expected to pose mainly local, maintenance-type problems. This is true for the ADLWR concept in which the target assembly is physically separated from the fission system.

From the points of view of plutonium toxicity and proliferation, the FSS-ADLWR promises to significantly alleviate the difficulties encountered by the nuclear energy technology that are related to these issues (for details see Sect. 4.4). Since the ADLWRs will be thermal breeders, their actinide wastes are expected[17] to be several magnitudes lower than those from fast fission systems (the "reference" breeders). Moreover, by keeping the actinides with the recycled fuel, and/or by irradiating the actinides, as well as the long-lived fission products, in the "free" sectors around the target (for details see Sect. 5.4), it might be possible to significantly reduce the magnitude of the radioactive waste problem.

If operated with the thorium fuel cycle the actinide waste problem of the ADLWR is expected[4] to be about six orders of magnitude lower than that with the U-Pu fuel cycle (an inherent feature of the thorium fuel cycle).

5.6 Operational Flexibility

Being free from the criticality constraint, the ADLWRs (as other source-driven systems) will have considerably better xenon override capability, load following capability, and also stretchout capability as compared with critical fission reactors.

Being of a pressure tube design, the ADLWRs may provide also for operational flexibility as far as the in-core fuel management is considered. It might be impractical, however, to realize this flexibility because of the relatively small distance in between the pressure tubes, making it difficult to design adequate machines for on-line refueling.

An important question concerning the viability of the ADLWR is the reliability of the accelerator-target systems. The reliability of high-energy accelerators developed for research applications is too low for viable power reactor applications. Highly reliable accelerators will have to be developed if they are to drive power reactors.

5.7 ADLWR For Fuel Production

By the time FSS-ADLWRs can become commercial, the nuclear energy system will consist of a large capacity of LWRs which will require fissile fuel supply. It might be possible to design ADLWRs that will breed extra fuel to support the needs of the LWRs.

Examining the results in Fig. 12 it is realized that the fissile fuel content of ADLWR blankets designed with a water-to-fuel volume ratio of 0.5 reaches about 3% (for the U_3Si fuel) by the end of the irradiation cycle. This is just about the fissile fuel content required for fueling LWRs. Thus we can conceive of a system in which the Fissile-Fuel Producing (FFP) ADLWRs described above work in tandem with LWRs to provide a combined system that is fuel-self-sufficient, free from the need for uranium enrichment as well as for the separation of plutonium.

Figure 16 shows the variation of the fissile fuel content (calculated with WIMS[8]) during two irradiation cycles in the tandem fuel cycle proposed. Starting with natural uranium in a FFP-ADLWR, the fissile fuel content builds itself to about 2.5% by the end of the irradiation cycle No. I. The irradiated fuel is partially reprocessed (after an adequate cooling period) only to extract the fission products. The co-processed fuel is refabricated into fuel rods and loaded into a LWR where it undergoes the second irradiation cycle. At the end of irradiation cycle No. II the fissile fuel content in the fuel drops to about 1.4%. If this fuel is used, after partial reprocessing and fuel rod fabrication, in the FFP-ADLWR it will improve the average multiplication of this reactor blanket (compare the evolution of k during cycles I and III, Fig. 16). After another irradiation cycle the tandem fuel cycle will approach a quasi-equilibrium state in which the fissile fuel content at each point in the cycle will be about constant.

Alternatively, the 1.4% enriched fuel extracted from the LWR could be used after co-processing and refabrication to fuel HWRs. The fuel coming out of these HWRs will have a fissile fuel content similar to that of natural uranium. It can be used to fuel the FFP-ADLWR, thus closing a triplet fuel cycle. Figure 17 shows, very schematically, the tandem and triplet fuel cycles described above.

5.8 Alternative Blanket Concepts

Many other concepts of fission systems may be considered for the blanket of a source-driven power reactor. We shall restrict our consideration to thermal fission systems that promise to provide a high energy multiplication and breeding, while using fuel with a low fissile fuel content (similar to the content of ^{235}U in natural uranium).

Of the thermal systems, the gas-cooled graphite-moderated ones appear to be particularly interesting. For one, they promise to provide high thermal efficiencies — a very important ingredient for the economical

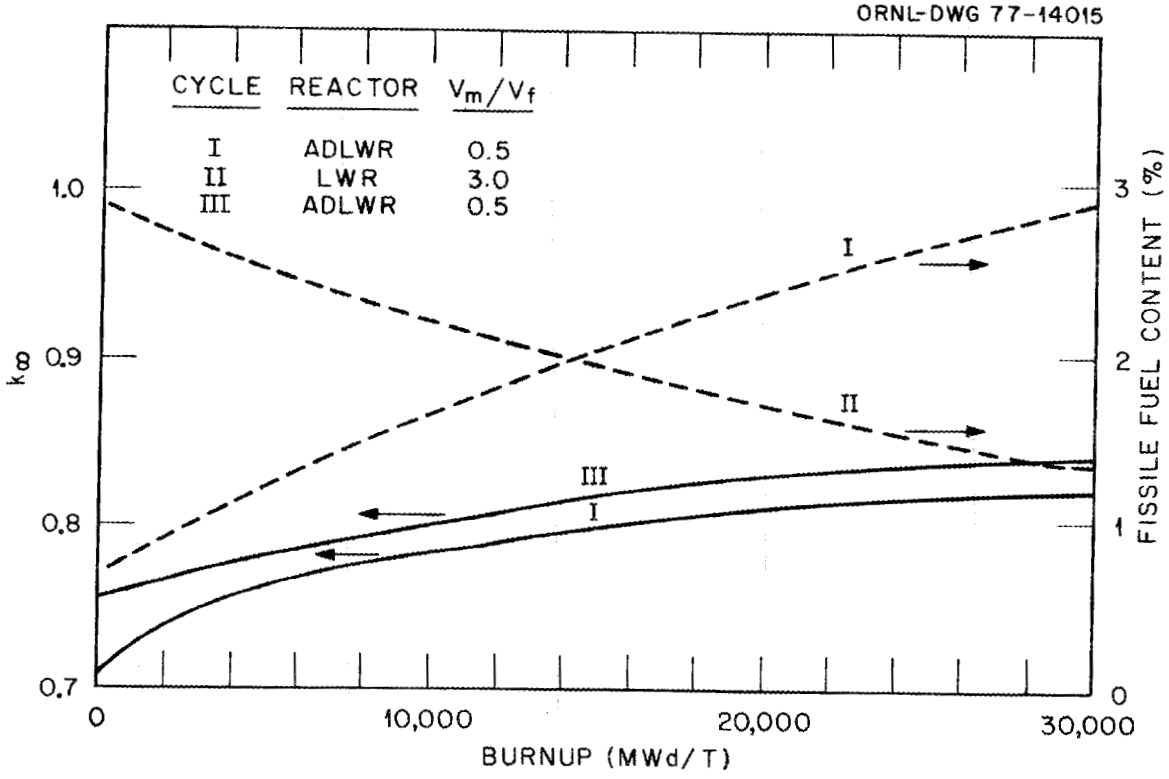

Fig. 16. Variation of the infinite multiplication constant and fissile fuel content of U_3Si-H_2O working in tandem with LWRs.

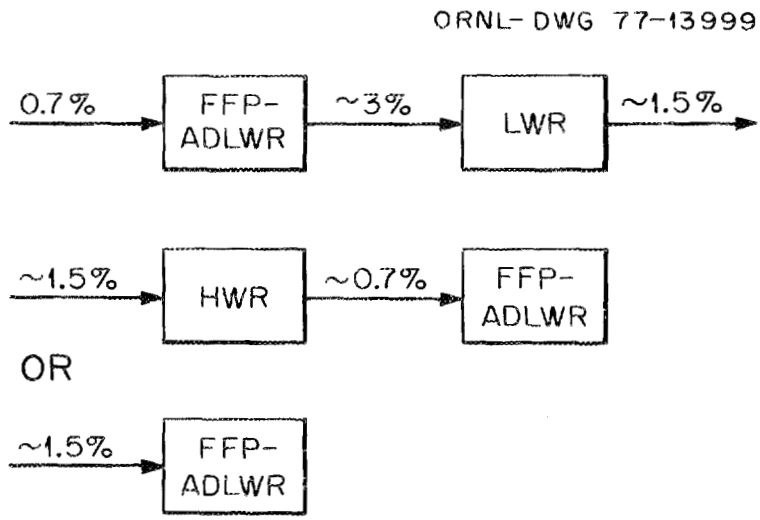

Fig. 17. A schematic description of tandem or triplet fuel cycles supported by a fissile-fuel-producer ADLWR.

viability of accelerator driven systems. Particularly useful features are provided, in addition, by the pebble-bed concept of gas-cooled graphite systems. A blanket based on the pebble-bed concept could be designed in a spherical configuration (with adequate access provided for the accelerator beam and target assemblies) to provide a higher efficiency for the utilization of the source neutrons. The on-line refueling capability of the pebble-bed concept can provide for high operational flexibility and uniform fuel exposure. The high burn-up levels the pebble-bed fuel can withstand is another useful feature. The question is whether the pebble-bed concept could be adopted for a subcritical mode of operation (having a relatively small moderator-to-fuel volume fraction) to provide a high enough energy generation per source neutron and breeding, while using a low enrichment fuel. Similar advantages could perhaps be provided by the molten salt concept.

6. SUMMARY AND CONCLUSIONS

The combination of a spallation neutron source provided by a high-energy proton accelerator (having the beam energy and current typical of those considered for fuel breeding applications) and a subcritical light-water fission system can provide for a useful power reactor. Following is a summary of features of the resulting Accelerator Driven Light Water Reactor (ADLWR):

(1) Our lower limit estimation of the average energy that can be generated in the natural-uranium (U_3Si fuel) light-water blanket of the ADLWR is about 750 MeV per spallation neutron that reaches the blanket.

(2) With this energy generation ability, the design limit (imposed by blanket thermal-hydraulic constraints) on the flux of source neutrons that can reach the blanket is about 3.7×10^{13} neutrons per second per square centimeter of the blanket surface area.

(3) The total neutron source intensity required to drive an ADLWR of a net capacity of 1000 MWe is of the order of 3.5×10^{19} neutrons per second.

(4) Requirements (2) and (3) imply that the blanket of a 1000 MWe ADLWR has to be at least 3 to 3.5 meters away from the center of the source. A thickness of 0.5 m is found to be sufficient for the type of blanket considered.

(5) A pressure-tube blanket design appears to be most suitable for the ADLWR. The fuel is conceived to be in the form of a cluster of rods per pressure tube. The blanket geometry considered for the reference evaluation is in the form of a cylindrical annulus.

(6) The average-to-maximum power density across the blanket considered is about 0.42.

(7) The volume of the core (defined by the outer boundaries of the blanket) of an ADLWR for a 1000 MWe net power output can be about half of the volume of the core of a HWR for the same power output, and 3 to 5 times larger than the volume of LWR cores. The active part (blanket) of the ADLWR core is, however, smaller than the volume of LWR cores.

(8) The effective (referred to the same net electrical power output) average specific power of an ADLWR can be 2 to 3 times that of LWRs and about 40% higher than that of HWRs.

(9) The large cavity in the ADLWR provides ample space for the location of the target assembly and for maintaining it. There is no need for physical coupling between the blanket and the target; the only coupling is provided by the source neutrons.

(10) Radiation damage rates and power densities (per unit volume of the fuel) in the blanket of the ADLWR are not expected to be significantly different from those in critical fission reactors. (In view of the relatively low flux of source neutrons that reach the blanket, see point No. 2).

The ADLWR is a breeding reactor that is fueled with natural uranium and based (as far as the fission system is concerned) on the most developed fission technology — that of LWRs and HWRs. The natural-uranium light-water system that provides for the highest energy multiplication is found to breed with an average breeding ratio of unity. In other words, the equilibrium fissile fuel content of the highest multiplying light-water uranium system is just about the content of ^{235}U in natural uranium. This distinguishing feature can provide the basis for a nuclear power economy that is based on Fuel-Self-Sufficient (FSS) ADLWRs and possesses a collection of attractive fuel-cycle characteristics, including:

(1) Breeding.

(2) No doubling time limitation on the rate of introduction of FSS-ADLWRs into the power system.

(3) No need for uranium enrichment.

(4) No need for the separation of plutonium from the fuel. A co-processing mode of operation is envisioned in which only the fission products (and, perhaps only part of them) are separated from the fuel.

(5) the fissile fuel content throughout the fuel cycle is similar to that of ^{235}U in natural uranium.

Consequently,

(6) Under no credible circumstances can there be a criticality accident in the reactor and in the out-of-core fuel cycle.

Following is a list of additional fuel-cycle related characteristics of FSS-ADLWRs:

(7) They could utilize depleted uranium without sacrificing significantly on their performance as power reactors.

(8) They may be efficiently operated with the thorium fuel cycle.

(9) It is likely that the plutonium production rate and equilibirum concentration in FSS-ADLWRs operated with the denatured fuel cycle will be lower than those of any breeding critical fission reactor .

The collection of fuel cycle related features listed above can, potentially, alleviate (simultaneously) many difficulties encountered by the nuclear energy technology by:

(a) Improving the utilization of the nuclear fuel reserves.
(b) Reducing the probability for the diversion of fissile fuel.
(c) Reducing the hazards of plutonium toxicity accidents.
(d) Alleviating the magnitude of the radioactive waste problem.

In summary, the relief of the criticality constraint on the design of fission reactors that could become possible when neutron sources from high-energy accelerators (of the type and intensity being considered for fissile fuel production) are available can be beneficially utilized to design fission power systems having significant improvements in the fuel cycle characteristics. The resulting source-driven power reactors may provide interesting new options for the development of nuclear energy systems.

These options include:

(a) A nuclear energy system that is based on fuel-self-sufficient power reactors (described above). The fuel cycle needed to support such a system is a simple "single-loop" cycle: The fissile fuel is produced and consumed in the same type of reactors without increasing the fissile fuel content.

(b) A nuclear energy system in which fissile-fuel-producing accelerator-driven power reactors (producing less power than the fuel-self-sufficient reactors of "a") operate in tandem with LWRs (or with LWRs and HWRs) to provide an overall fuel-self-sufficient power economy: Fueled with natural uranium, a fissile-fuel-producing ADLWR (designed with a water-to-fuel volume ratio of about 0.5, as compared with about 2.0 for the FSS-ADLWR) increases the fissile fuel content to about 3% by the end of the irradiation cycle. This fuel is then used, after co-processing, to fuel the LWR from which it goes (after co-processing) to fuel the ADLWR and so on and so forth. This power system is free from the need for uranium enrichment and for the separation of plutonium.

A drawback of the ADLWRs (which is common to all accelerator-driven systems) is a reduced overall plant efficiency as compared to the net efficiency of critical reactors based on the same fission system. The overall energy balance of a power system based on FSS-ADLWRs is found, however, to be comparable to that of a power system based on the symbiosis of accelerator-driven "fuel factories" and conventional LWRs (but less favorable than the energy balance of a symbiosis of accelerator-driven fuel factories and high-conversion fission reactors). To reduce the magnitude of the thermal pollution resulting from the reduced net plant efficiency (i.e., due to the power consumption of the accelerator) and to improve the ADLWR economics, it might be desirable to design these reactors for the dual purpose of supplying electricity and process heat.

The realization of the attractive options offered by the ADLWRs depends on:

(1) The demonstration (at first, by calculation) that the range of system performance parameters that appear to be prerequisites for an economically viable power source is accessible with sound design practices.
(2) The successful development of a reliable accelerator and target assembly to provide the neutron source characteristics required.
(3) Obtaining favorable results from economic analyses of nuclear power systems based on ADLWRs as compared with other types of nuclear power systems.

The preliminary evaluation of the performance expected from FSS-ADLWRs carried out in this work does not provide a conclusive demonstration of the fulfillment of requirement number 1. Using a set of conservative (as far as neutron and energy balance considerations are concerned) assumptions, we calculated a net overall plant efficiency that was too low when a lead target is used. With a uranium target, the plant efficiency of the same FSS-ADLWR was in the range of practical interest; however, it is very doubtful whether a uranium target could be developed for such an application. Sensitivity analyses of the ADLWR plant efficiency for a range of input assumptions (that is, various assumptions for the neutron yield from lead targets, blanket energy generation per source neutron, blanket coverage efficiency, thermal efficiency and accelerator beam injection efficiency) indicates that it is likely that ADLWRs could be designed to provide high enough plant efficiencies (even when using a lead target). This conclusion, along with the important contributions to the development of a nuclear power economy that might be provided by the source-driven power reactors considered, justify a thorough feasibility study of ADLWRs. It is also desirable to examine source-driven power reactors that are based on other promising concepts of thermal-fission systems, such as gas-cooled ones. In evaluating the feasibility of source-driven power reactors, one should bear in mind the fact that it is not unlikely that suitable fusion neutron sources may become available in due time, thus providing another option for the drivers of subcritical reactors.

ACKNOWLEDGEMENTS

Useful correspondence with Dr. D. L. Jassby and useful discussions with Drs. R. G. Alsmiller, D. E. Bartine, J. R. Engel and F. R. Mynatt are acknowledged. The lattice calculations were performed by A. Schneider.

REFERENCES

1. J. S. Fraser, "High Power Accelerators for Spallation Breeders of Fissile Material," *Bull. Amer. Phys. Soc.* 22: 158 (1977).

2. J. S. Fraser, C. R. J. Hoffmann and P. R. Tunnicliffe, "The Role of Electrically Produced Neutrons in Nuclear Power Generation," *Atomic Energy of Canada Report* AECL-4658 (1973).

3. Meyer Steinberg et al., "The Brookhaven Accelerator Reactor Breeder (BARB)," *Trans. Amer. Nucl. Soc.* 24: 471 (1976).

4. F. R. Mynatt et al., "Preliminary Report on the Promise of Accelerator Breeding and Converter Reactor Symbiosis (ABACS) as an Alternative Energy System," ORNL/TM-5750 (1977).

5. C. M. Van Atta, J. D. Lee and W. Heckrotte, "The Electronuclear Conversion of Fertile to Fissile Material," UCRL-52199 (1976).

6. E. Greenspan, "Prospects for Natural-Uranium Light-Water Breeding Hybrid Reactor," *Trans. Isr. Nucl. Soc.* 4: 35 (1976).

7. E. Greenspan, A. Schneider, D. Gilai and P. Levin, "Natural-Uranium Light-Water Breeding Hybrid Reactors," *Proc. Second Topical Meeting Tech. Nucl. Fusion*, Richland, Sept. 1976.

8. E. Greenspan, A. Schneider and A. Misolovin, *Trans. Amer. Nucl. Soc.* 26: 305 (1977).

9. E. Greenspan, A. Schneider, A. Misolovin and D. Gilai, *Trans. Amer. Nucl. Soc.* 26: 511 (1977).

10. "The AECL Study for an Intense Neutron Generator," Atomic Energy of Canada Limited Report AECL-2750 (1967).

11. D. L. Jassby, Nucl. Fusion 17: 309 (1977).

12. R. G. Alsmiller, private communication.

13. D. J. Bender et al., *Trans. Amer. Nucl. Soc.* 26: 55 (1977) see also J. D. Lee, Ed., "Mirror Hybrid Reactor Studies — July 1975 through September 1976," UCRL-50043-1 (1976).

14. J. R. Askew, E. J. Fayers and P. B. Kemshell, "General Description of the Lattice Code WIMS," *J. Brit. Nucl. Soc.* 5: 56 (1966).

15. P. R. Kasten et al., " Assessment of the Thorium Fuel Cycle in Power Reactors," ORNL/TM-5565 (1977).

16. M. Steinberg, H. Takahashi, H. Ludewig and J. Powell, *Trans. Amer. Nucl. Soc.* 26: 293 (1977).

17. F. Girardi and G. Bertozzi, "Long-Term Alpha-Hazard of High Activity Waste From Nuclear Fuel Reprocessing," EUR 5214e (1975).

Internal Distribution

1-3. L. S. Abbott
4. R. G. Alsmiller, Jr.
5. D. E. Bartine
6. T. J. Burns
7. G. F. Flanagan
8. H. Goldstein (Consultant)
9. F. C. Maienschein
10. B. F. Maskewitz
11. R. W. Peelle
12. D. K. Trubey
13. C. R. Weisbin
14. G. E. Whitesides
15. D. B. Trauger
16. A. Zucker
17. P. Greebler (Consultant)
18. W. W. Havens, Jr. (Consultant)
19. A. F. Henry (Consultant)
20. R. E. Uhrig (Consultant)
21-22. Central Research Library
23. ORNL Y-12 Technical Library
Document Reference Section
24. Laboratory Records Department
25. Laboratory Records, ORNL R.C.
26. ORNL Patent Office

External Distribution

27-51. E. Greenspan, Nuclear Research Center-Negev, P.O.B. 9001, Beer-Sheva 84190, Israel
52-78. Technical Information Center (TIC)
79. Department of Energy, Research and Technical Support Division, P. O. Box E, Oak Ridge, TN 37830: Director