DATE ISSUED AUG 21 1978

ORNL/TM-6264

770126

Partial Thermal Denitration of Uranyl Nitrate Solutions in a Screw Denitrator

Helmut D. Ringel
P. A. Haas

OAK RIDGE NATIONAL LABORATORY
OPERATED BY UNION CARBIDE CORPORATION · FOR THE DEPARTMENT OF ENERGY

Printed in the United States of America. Available from
National Technical Information Service
U.S. Department of Commerce
5285 Port Royal Road, Springfield, Virginia 22161
Price: Printed Copy $4.50; Microfiche $3.00

This report was prepared as an account of work sponsored by an agency of the United States Government. Neither the United States Government nor any agency thereof, nor any of their employees, contractors, subcontractors, or their employees, makes any warranty, express or implied, nor assumes any legal liability or responsibility for any third party's use or the results of such use of any information, apparatus, product or process disclosed in this report, nor represents that its use by such third party would not infringe privately owned rights.

ORNL/TM-6264
Dist. Category UC-77

Contract No. W-7405-eng-26

CHEMICAL TECHNOLOGY DIVISION

HTGR Fuel Recycle Development Program (189a OH 045)
Reprocessing Development (Task 300)

PARTIAL THERMAL DENITRATION OF URANYL NITRATE SOLUTIONS IN A SCREW DENITRATOR

Helmut D. Ringel* and P. A. Haas

Date Published: August 1978

*Guest scientist from KFA Jülich, West Germany.

OAK RIDGE NATIONAL LABORATORY
Oak Ridge, Tennessee 37830
operated by
UNION CARBIDE CORPORATION
for the
DEPARTMENT OF ENERGY

CONTENTS

Page

ABSTRACT. 1

1. INTRODUCTION. 1

2. PROCESSES FOR PREPARATION OF ACID-DEFICIENT URANIUM NITRATE SOLUTIONS 2

2.1 Partial Neutralization of NO_3^- in Uranium Nitrate Solutions. 2

2.2 Removal of HNO_3 from Uranium Nitrate Solutions 3

3. THE $UO_2(NO_3)_2$-HNO_3-H_2O SYSTEM 4

4. PRINCIPAL FLOWSHEET FOR THERMAL DENITRATION IN CONNECTION WITH RESIN LOADING. 6

5. EXPERIMENTAL EQUIPMENT. 11

6. EXPERIMENTAL RESULTS FOR THERMAL DENITRATION. 14

6.1 Experiments for Preparation of Acid-Deficient Uranyl Nitrate Solution. 14

6.2 Experiments for Preparation of Uranium Oxide Solid . . . 19

7. DISSOLUTION OF THE SOLID. 23

8. CONCLUSION AND RESULTING PROCESS CHANGES. 23

8.1 Flowsheet Changes. 23

8.2 Proposed Improved Screw Denitrator and Dissolver Design 28

9. SUMMARY 30

10. REFERENCES. 31

PARTIAL THERMAL DENITRATION OF URANYL NITRATE SOLUTIONS IN A SCREW DENITRATOR

H. D. Ringel and P. A. Haas

ABSTRACT

Weak-acid ion exchange resin is loaded with uranium by acid-deficient uranyl nitrate solutions that have a nitrate uranium ratio of about 1.6. Processing this solution from an acid-excess uranyl nitrate solution by thermal denitration in a screw denitrator is described in this report. Direct processing of this solution resulted in an insufficient acid deficiency of about $C_N/C_U = 1.8$. Therefore, the process was modified; a highly denitrated UO_3 solid was processed with $C_N/C_U = 0.2$, and this solid was subsequently dissolved to prepare acid-deficient uranyl nitrate solution or slurry. A detailed flowsheet for this process is given. The proposed combined screw denitrator-dissolver unit may meet the process requirements with improved efficiency.

---

1. INTRODUCTION

Fuel kernels for High-Temperature Gas-Cooled Reactors (HTGRs) can be prepared from uranium-loaded carboxylic acid cation exchange resins.[1] An acid-deficient uranyl nitrate (ADUN) solution is required for loading the weak-acid ion exchange resin (WAR) with uranium. For recycle HTGR fuel, the source of uranium is $^{233}UO_2(NO_3)_2$ solution from a fuel element reprocessing plant. Typically, this solution will have a uranium concentration of 0.4 mole/liter with some excess acid of $C_N/C_U = 2.2$. For the resin loading process, this nitrate uranium ratio must be reduced below the stoichiometric value of 2.0 down to about 1.6

so that the ADUN solution composition is equivalent to $UO_2(OH)_{0.4}(NO_3)_{1.6}$. This acid deficiency is necessary to achieve full loading of WAR with uranium. The objective of this study was to determine the practicality of partial thermal denitration in a screw calciner for preparation of ADUN solution.

2. PROCESSES FOR PREPARATION OF ACID-DEFICIENT URANIUM NITRATE SOLUTIONS

In principle, the uranyl nitrate solutions may be made acid deficient by:

1. no removal of nitrate, but partial neutralization of the solution by addition of a base, preferably NH_4OH because it introduces no metallic cations;
2. partial removal of the nitrate by means of solvent extraction, dialysis, or thermal decomposition;
3. complete removal of the nitrate by precipitation or thermal processes and redissolution of the resulting UO_3 in uranyl nitrate solution or dilute nitric acid so that an acid deficiency results.

2.1 Partial Neutralization of NO_3^- in Uranium Nitrate Solutions

Partial neutralization of NO_3^- by addition of NH_4OH, which does not require elaborate equipment, should be carried out stepwise during the uranium loading in a countercurrent loading cascade.[2] Using this procedure, the uranium in a given solution can be completely loaded onto the resin so that the effluent solution is uranium free. The principal

disadvantage of this process is the NH_4NO_3 in the effluent solution, which is a radioactive waste. In addition, some ammonium-form resin might be present in the uranium-loaded product, so the kernels could end up with a higher nitrogen content. The reaction representing partial neutralization is

$$2UO_2(NO_3)_2 + NH_4OH \rightarrow 2UO_2(OH)_{0.5}(NO_3)_{1.5} + NH_4NO_3 \ .$$

2.2 Removal of HNO_3 from Uranium Nitrate Solutions

Solvent extraction. Technical experience exists for nitrate removal by solvent extraction with amine.[3] By this process the solution can be easily adjusted to the necessary C_N/C_U ratio. The disadvantages are that an organic liquid must be handled and the waste will be an ammonium nitrate solution. The overall reaction that represents the formation of ADUN, where X_2NH stands for the secondary amine, is

$$2UO_2(NO_3)_2 + H_2O + X_2NH \rightarrow 2UO_2(OH)_{0.5}(NO_3)_{1.5} + X_2NH_2NO_3 \ .$$

Thermal denitration. The thermal process to effect total removal of NO_3^- has been studied extensively and is well known.[4] The complete thermal decomposition of uranyl nitrate is described by the equation

$$UO_2(NO_3)_2 \cdot xH_2O \xrightarrow{\text{heat}} UO_3 + 2NO_2 + 0.5O_2 + xH_2O \ .$$

The product of this process (UO_3) can be used for preparing ADUN solution for resin loading.[5] The corresponding equation is

$$3UO_2(NO_3)_2 + UO_3 + H_2O \rightarrow 4UO_2(OH)_{0.5}(NO_3)_{1.5} \ .$$

With this procedure, the waste is reusable nitric acid. However, the product is denitrated more than is actually necessary; the UO_3 must be redissolved with uranyl nitrate solution or dilute nitric acid. Therefore, partial thermal removal of nitrate from uranium nitrate solution or uranyl nitrate hexahydrate has been attempted.[6,7,8] In principle, this partial denitration may be described by

$$2UO_2(NO_3)_2 + H_2O \xrightarrow{\text{heat}} 2UO_2(OH)_{0.5}(NO_3)_{1.5} + HNO_3\uparrow .$$

Although some nitrate can be removed with this process, those experiments have not shown efficient NO_3^- removal necessary for a practical process. Experimental results indicate that, for denitration with steam stripping or at temperatures up to 200°C, either precipitation is difficult to avoid or the denitration rate is too small.

3. THE $UO_2(NO_3)_2$-HNO_3-H_2O SYSTEM

The pure solution and solution-solid phases of the $UO_2(NO_3)_2$-HNO_3-H_2O system are generally well known,[9] but the vapor compositions above these solution-solid phases at different temperatures are not known. These data would be valuable for understanding and predicting results for a steam stripping of nitrate or the decomposition of $UO_2(NO_3)_2 \cdot xH_2O$ at high temperatures. A three-composition diagram,[10] which is shown in Fig. 1, gives the boiling point isotherms of the $UO_2(NO_3)_2$-HNO_3-H_2O system. According to this diagram, an excess acid $UO_2(NO_3)_2$ solution will not become acid deficient until the temperature is above 188°C. At 188°C the composition is equivalent to $UO_2(NO_3) \cdot 2H_2O$; below 188°C

ORNL-DWG 78-2161

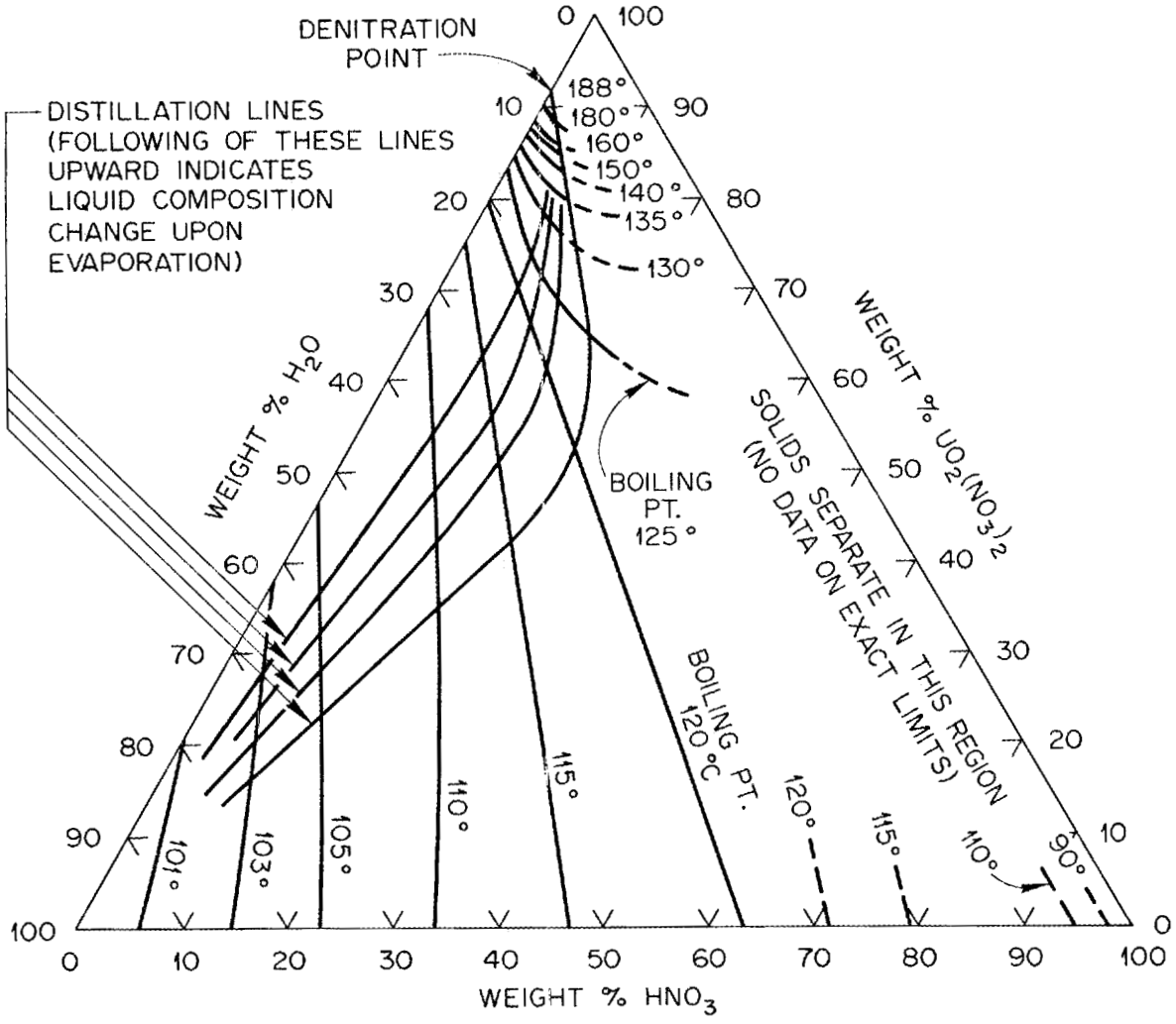

Fig. 1. Boiling point isotherms of the system $UO_2(NO_3)_2$-HNO_3-H_2O.

Source: A. G. Krigens, A Compilation of Physical and Chemical Properties of Materials and Streams Encountered in the Chemical Processing Department, ARH-724 ADD, Atlantic Richfield Hanford Co., Richland, Wash. (July 1968).

only excess HNO_3 is driven off. Even if this might be not precise equilibrium data, it seems to be applicable for predicting the denitration behavior.

Some observations from heating uranyl nitrate hexahydrate in a stainless steel beaker are summarized in Table 1. The results of other experiments[6] for thermal denitration of $UO_2(NO_3)_2 \cdot 6H_2O$ are given in Fig. 2; this figure shows how the achieved acid deficiency depends on the temperature.

Further information on typical behavior of $UO_2(NO_3)_2 \cdot 6H_2O$ when heated under different conditions can be obtained by thermogravimetric analyses. Decomposition curves for three different conditions are given in Fig. 3. These curves indicate slight denitration at temperatures above 150°C (curves B and C), but a practical efficiency of denitration results only at temperatures above 250°C (curve A).

4. PRINCIPAL FLOWSHEET FOR THERMAL DENITRATION IN CONNECTION WITH RESIN LOADING

Figure 4 is a mass flowsheet for loading 1 kg of uranium onto WAR with typical process parameters. The loading could be either batchwise or continuous. Any thermal denitration has to meet these process parameters. For loading 1 kg of uranium, the thermal denitration typically accepts 8.4 liters of uranium nitrate solution with excess acid from reprocessing and 33 liters of uranium nitrate solution of about stoichiometric acid concentration from the loading process. The output at the denitration process must be 28 liters of solution with an acid deficiency of $C_N/C_U = 1.6$ and 13.4 liters of dilute nitric acid.

Table 1. Results from heating of uranyl nitrate hexahydrate in a stainless steel beaker

Temperature (°C)	Probable chemical action	Observed behavior
100-125	Loss of H_2O and HNO_3. Conversion of $UO_2(NO_3)_2 \cdot 6H_2O$ to di- or tri-hydrate.	Surface evaporation with slow rate of heating.
125-175	Conversion mainly to $UO_2(NO_3)_2 \cdot 2H_2O$.	Surface boiling even with slow rate of heating. Danger of spattering and loss of material.
175-220	Some loss of NO_x. Some conversion to UO_3.	Some precipitation of UO_3 begins.
220-250	Copious generation of NO_x with total conversion to UO_3.	Precipitation and/or solidification.

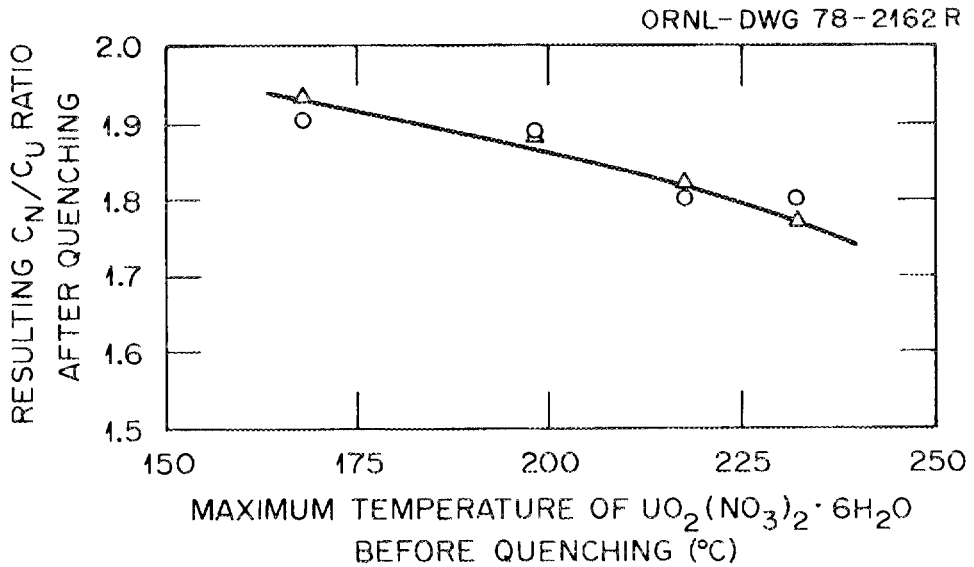

Fig. 2. Acid deficiency of uranyl nitrate solution achieved by heating $UO_2(NO_3)_2 \cdot 6H_2O$ and quenching the melt with water.

Source: K. J. Notz, Partial Thermal Denitration of UNH: Preliminary Experiments, GCR: 74-16 (July 1974), internal memorandum.

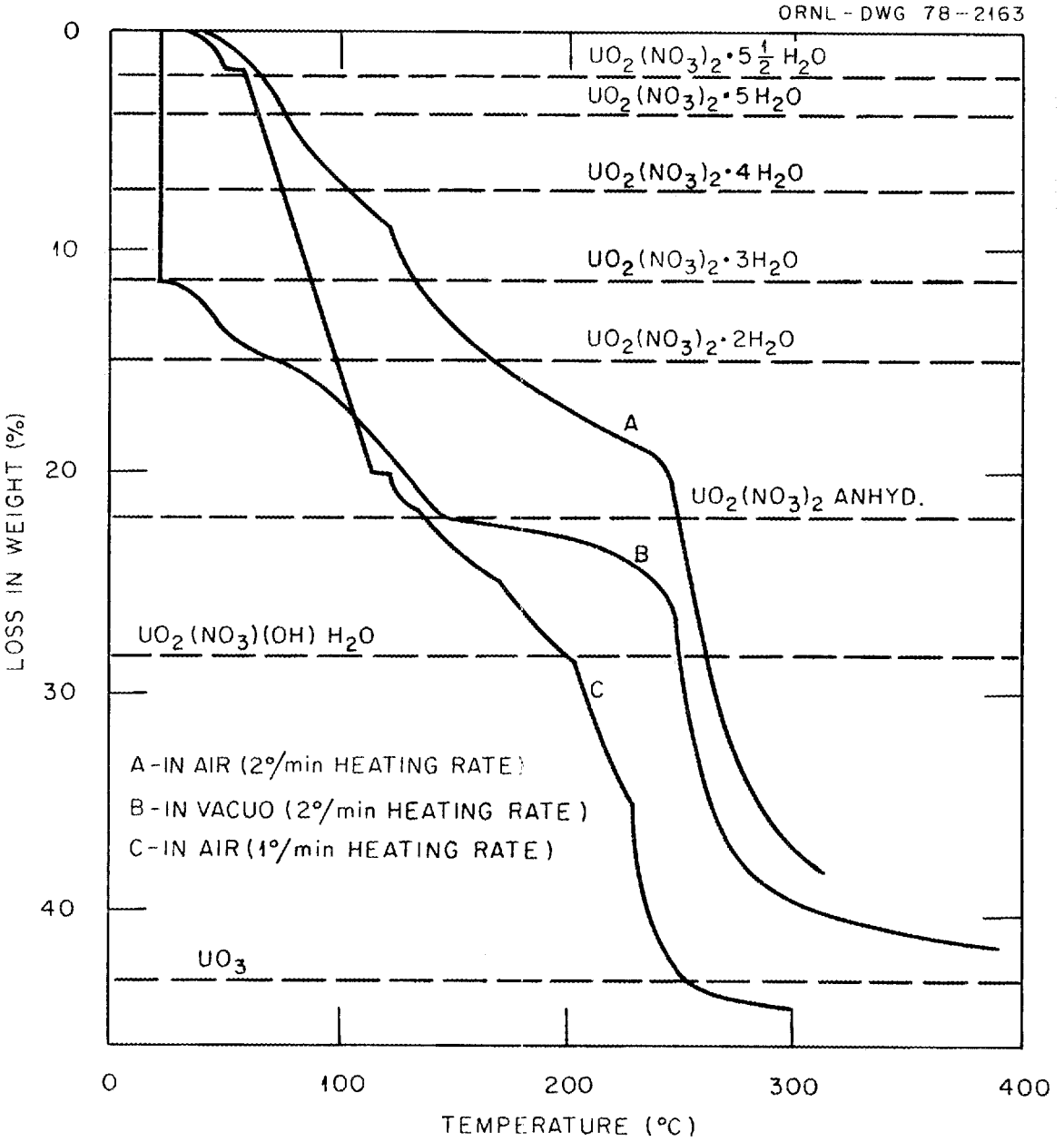

Fig. 3. Thermogravimetric curves for the decomposition of uranyl nitrate hexahydrate.

Source: C. D. Harrington and A. E. Ruehle, Uranium Production Technology, Van Nostrand, Princeton, 1959.

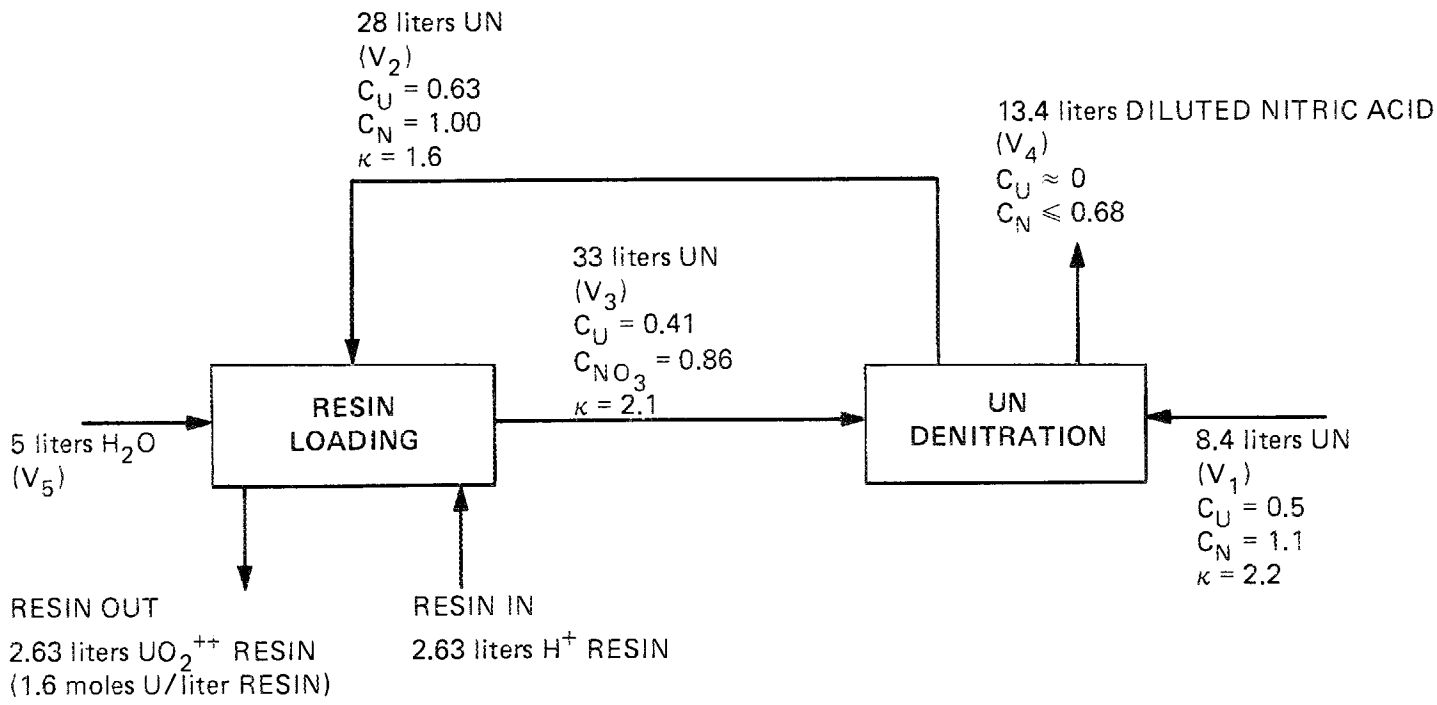

UN = URANYL NITRATE SOLUTION

C_U = URANIUM CONCENTRATION (moles UO_2^{++}/liter)

C_N = NITRATE CONCENTRATION (moles NO_3^- / liter)

κ = MOLE RATIO (mole NO_3^-/mole UO_2^{++}) = (C_N/C_U)

Fig. 4. Principal flowsheet for resin loading together with denitration. Values given are for a throughput of 1 kg of uranium.

5. EXPERIMENTAL EQUIPMENT

The main component of the experimental setup for thermal denitration of uranyl nitrate solution was an electrically heated screw conveyor. Figure 5 is a flowsheet of the facility which was intended to produce an acid-deficient solution or slurry. (The function of this facility was later changed to produce UO_3 solid.) The uranyl nitrate solution was pumped by a centrifugal pump from the solution tank to the screw conveyor. A small amount of this flow entered the screw conveyor for denitration, but most of the flow was used to flush the exit of the conveyor. Flushing the conveyor exit prevented plugging by solid UO_3 which might leave the denitrator. Furthermore, the flushing solution dilutes and transfers the slurry back to the solution tank. The water vapor, together with gaseous nitric components and air, was sucked out of the conveyor through a pipe header on the conveyor cover. This vapor was condensed by a condenser which regains some of the nitric acid, and the condensate (dilute nitric acid) was collected in a tank. A large amount of the gaseous nitric components probably left the system with the H_2O-air off-gas. Although no attempts were made to recover this nitric acid during the experiments, procedures for recovery of this acid are well known.

The screw conveyor was similar to a unit used by Felt[11] for calcination of plutonium nitrate. It consisted mainly of a U-shaped trough and a screw 75 mm in diameter, 900 mm long, and 50 mm pitch. The unit, fabricated of 304 L stainless steel, is shown in Fig. 6. The bottom clearance between the screw and trough before the experiment was about 2 mm, and the space between the screw and trough cover was about 30 mm.

ORNL-DWG 78-2165

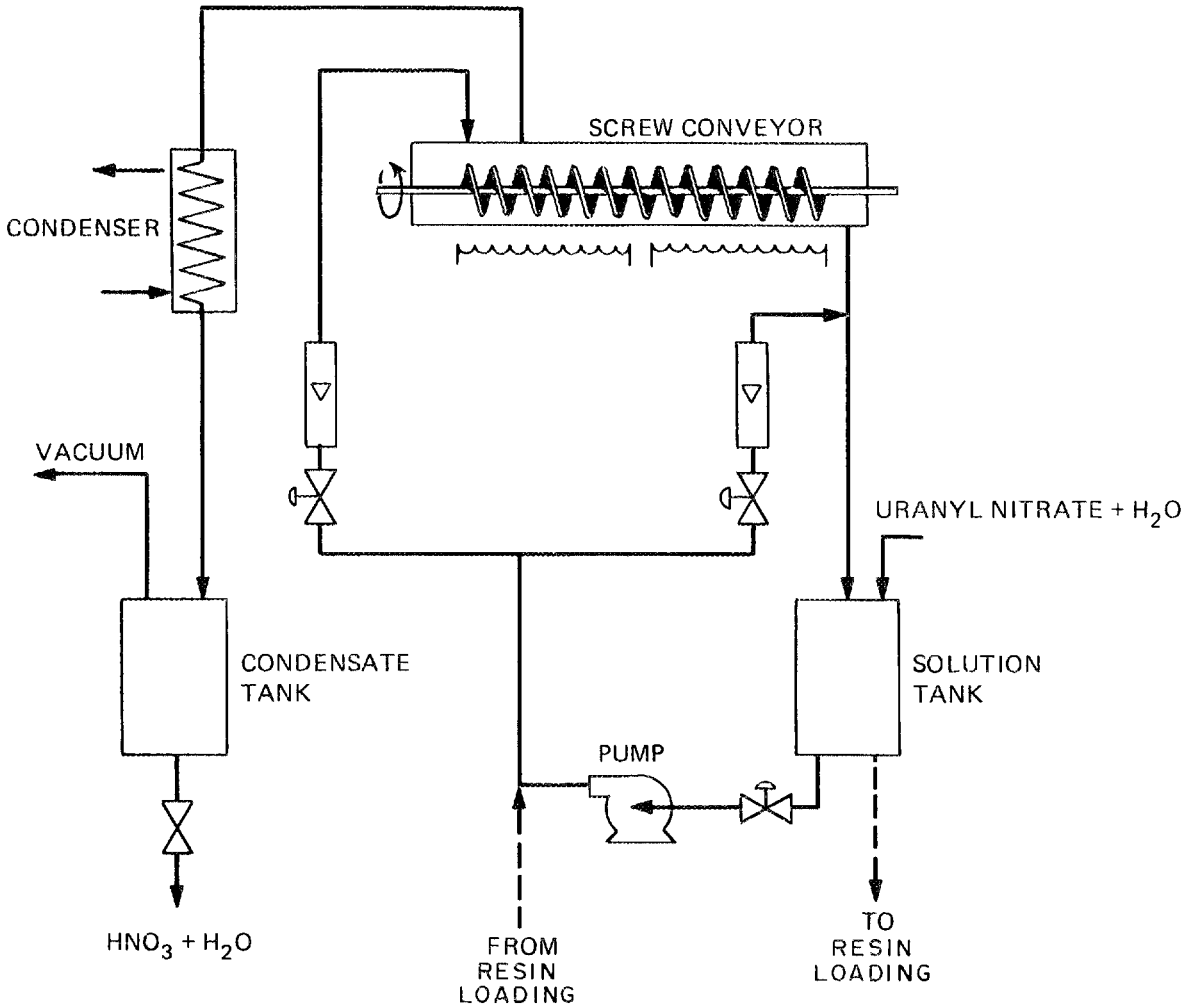

Fig. 5. Flowsheet of the thermal denitration facility.

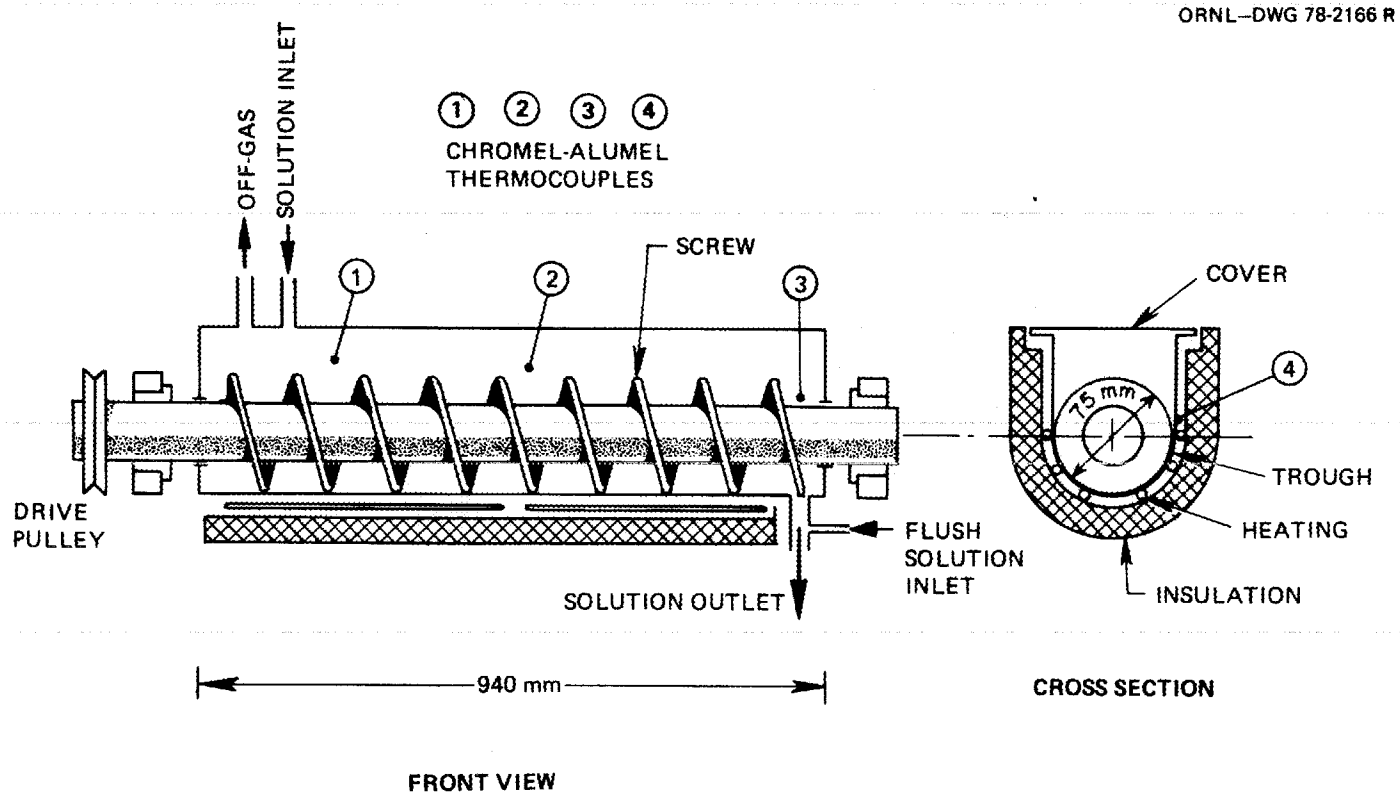

Fig. 6. Sketch of screw conveyor for denitration.

Because the trough was asymmetrically heated, it bent several millimeters when heated; therefore, the bottom clearance varied with time and position. The problem of jams between screw and trough during operation could be solved only by loosening the bearing blocks. Therefore, the bottom clearance and the thickness of the uranium solid layer during operation was unknown but was probably more than 2 mm. The screw was driven by an air motor via a V-belt drive of 6:1 reduction. Therefore, the screw speed was adjustable in a wide range, but with a motor torque of only 4 N·m (36 lb_f·in.), at 550 kPa (80 psi) air pressure and at 100 rpm, the speed was very dependent on the screw friction. The screw speed was monitored by a tachometer and was recorded. The lower part of the trough was electrically heated, and the heating area was divided into two sections. The heat input to each section was controlled by manual adjustment of one 1000-W variable voltage transformers. The trough was insulated with 25 mm of calcium silicate insulation. Three Chromel-Alumel thermocouples were located inside the top of the trough, and one thermocouple was attached to the outside trough wall (Fig. 6). Figure 7 is a photograph of the experimental setup.

6. EXPERIMENTAL RESULTS FOR THERMAL DENITRATION

6.1 Experiments for Preparation of Acid-Deficient Uranyl Nitrate Solution

Several runs were attempted with conditions intended to discharge acid-deficient uranyl nitrate solution. In these experiments, the main parameters that varied were the solution feed rate, the heating power, and therefore the temperatures. The experiments were carried out with

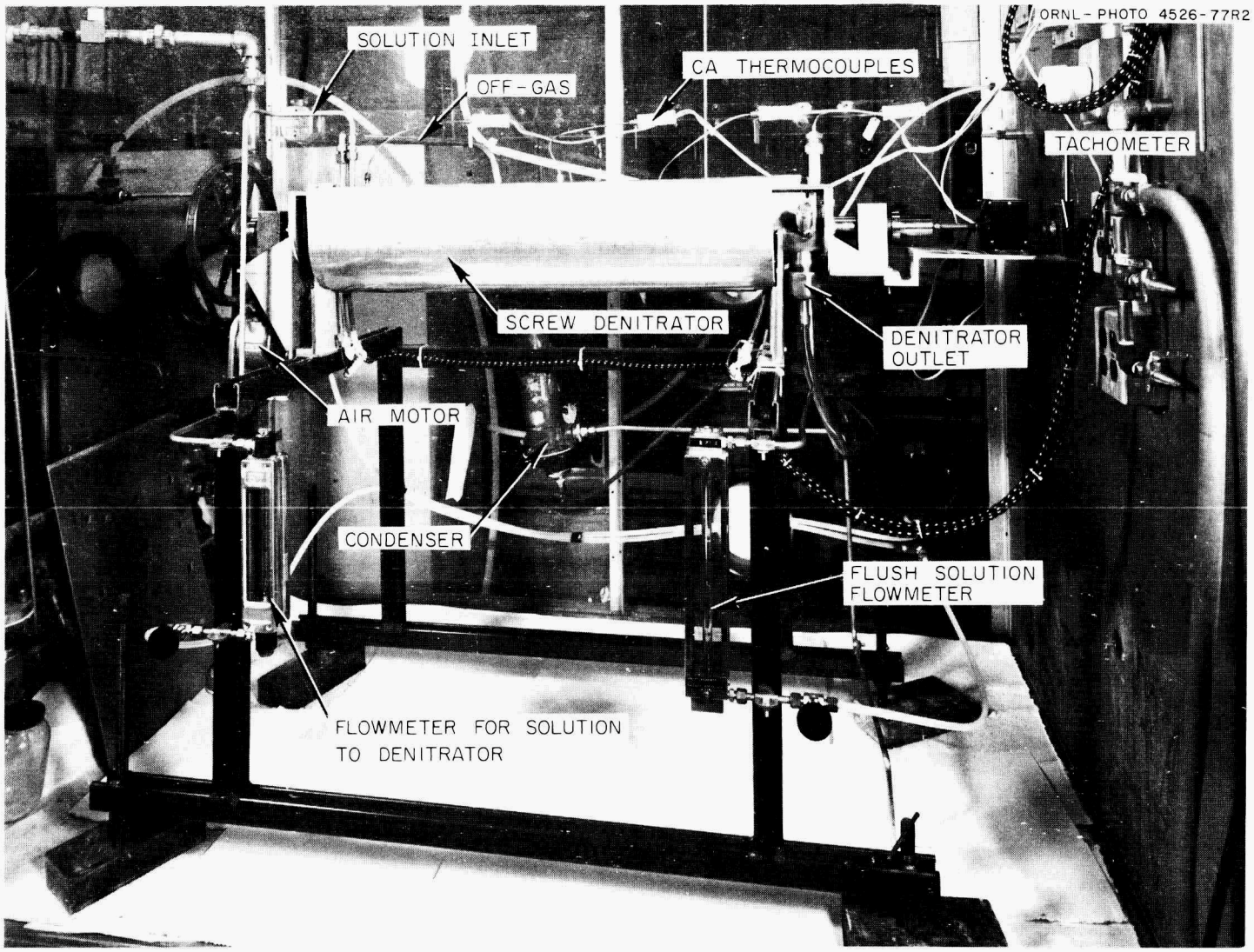

Fig. 7. Experimental setup for ADUN solution or slurry preparation.

a continuous flow of solution through the denitrator. For each run, the contents of the solution tank were recycled through the denitrator until the volume or concentration reached a prescribed value. During this operation, the acid content of the solution was monitored by sampling. Samples were taken from the solution tank and their density and pH value measured, the density with hydrometers and the pH with electrodes. The uranium concentrations, C_U, and C_N/C_U ratios were determined using the correlations for ADUN solutions as shown in ref. 3.

Table 2 summarizes the experimental conditions and results of five runs, which are described separately below. Figure 8 shows, for these runs, the change of the C_N/C_U ratio in the solution from the beginning to the end of each experiment. Each point given in the diagram represents one measurement of pH value and uranium concentration of the solution in the tank.

The average screw speed for all runs was 20 rpm, but fluctuations were great for reasons already mentioned. Therefore, the nominal denitration residence time was about 1 min.

Run 1. Operation at low uranium concentration and medium temperature resulted in no acid deficiency, although a small amount of precipitate could be observed for short periods (Fig. 8, curve 1). The C_N/C_U ratio was constant, even though some nitrate was driven off because a corresponding amount of uranium solidified and therefore was held up in the evaporator.

Run 2. At high uranium concentration, precipitation occurred throughout the experiment. The C_N/C_U ratio did reach 1.92. Curve 2 of Fig. 8 shows the decrease of the C_N/C_U ratio during the experiment.

Table 2. Summary of five runs for ADUN solution production

	Run number				
	1	2	3	4	5
Solution volume start, liters[a]	5.9	3.0	3.0	5.6	9.0
Uranium conc., moles/liter	0.19	2.8	0.61	0.67	0.68
Solution volume end, liters	3.2	0	1.3	1.35	0.2
Uranium conc., mole/liter	0.28	1.0	1.2	0.92	3.6
Condensate volume, liters	2.5	2.9		4.3	8.2
HNO_3 conc., mole/liter	0.1	0.2			0.13
Flow entering denitrator, ml/min	120	60-100	100-150	40-80	100-220
Heat power, kW	1.5	1.8	0.5-1.5	1.7	2.0
Average evaporation rate, cm^3/min	32	30	12	15	67
Temperatures, °C[b]					
Position 1 (top solution inlet	135	120-130	130-170	150	115
Position 2 (top middle)	150	130-160	150-210	150-240	125
Position 3 (air inlet)	70	55	50-70	50	45
Position 4 (outside wall)	200	230-300	200-400	350-500	225
Maximum acid deficiency achieved in solution, moles N/moles U	2.31	1.92	1.94	1.7	2.0

[a]Add 0.4 liter for total solution volume in system.

[b]See Fig. 6 for position of thermocouple.

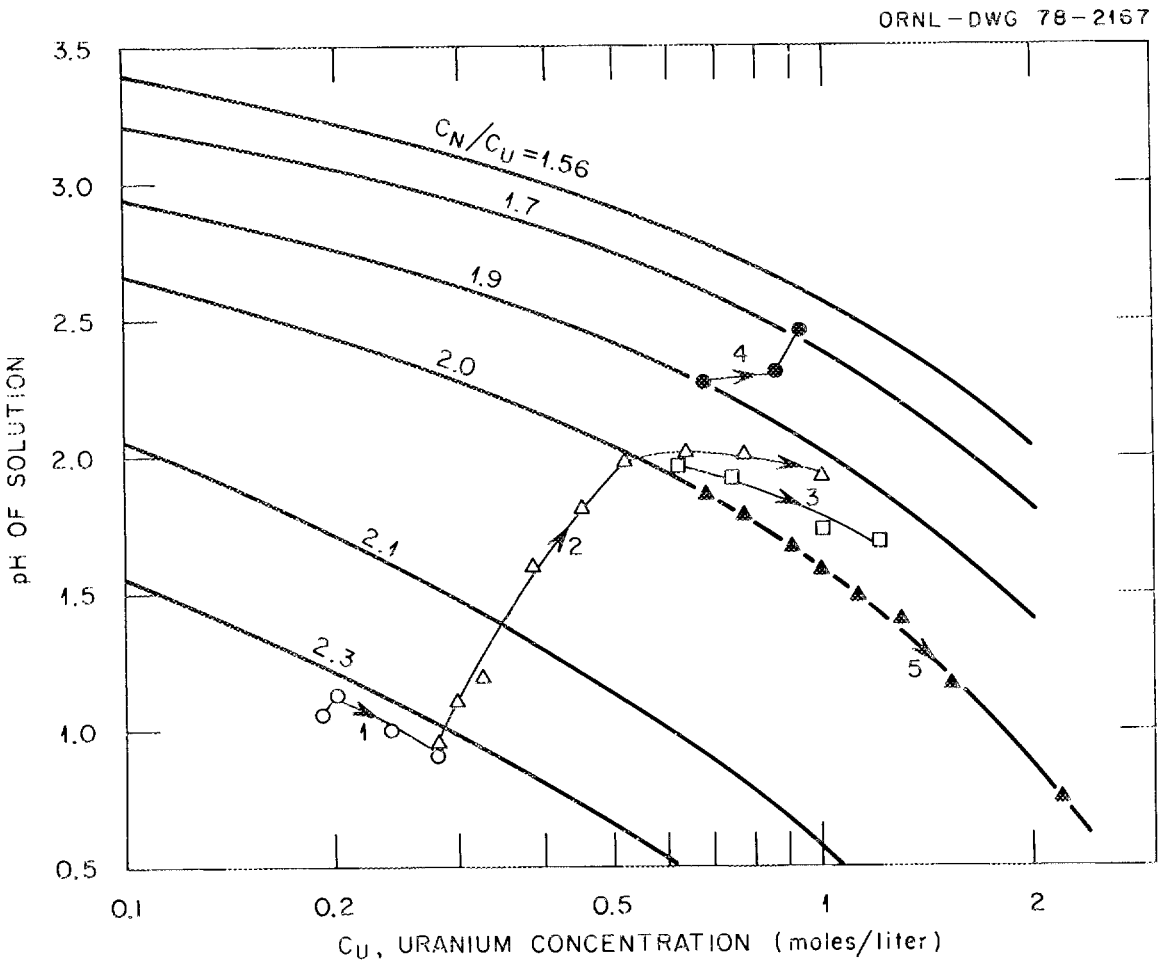

Fig. 8. Changes in pH and uranium concentration of the solution for five runs.

Run 3. Continued operation starting with a slightly acid-deficient solution of $C_N/C_U = 1.98$ did not achieve any greater acid deficiency (Fig. 8, curve 3).

Run 4. At high heating power and small solution feed rate, the resulting maximum acid deficiency in the solution tank was 1.7 moles NO_3^-/mole U (Fig. 8, curve 4). The operation was not really continuous because for an intervening period only solid was discharged from the denitrator. The acid deficiency was reached after some solid uranium oxide from the screw conveyor redissolved in the tank. At a power supply of 1.7 kW, the uranium output was only 60 g/hr, starting with a slightly acid-deficient solution of 1.9 moles NO_3^-/mole U.

Run 5. At high heating power and high rate of flow, the acid/uranium ratio remained constant even though the solution was concentrated to above 3 moles of uranium per liter (Fig. 8, curve 5). The solution was concentrated to molten uranyl nitrate hexahydrate, which solidified after cooling.

6.2 Experiments for Preparation of Uranium Oxide Solid

Because the experiments with recycle of acid-deficient solution or slurry did not achieve the intended result, the facility was modified so that solid uranium could be continuously produced. The principal changes were (1) enlarging the outlet pipe to 50 mm ID, and (2) removing or replacing gaskets to allow higher temperatures. With the modified facility (Fig. 9), highly concentrated uranyl nitrate solution was continuously processed to solid uranium oxide. Experimental parameters and the results for one typical run are listed below.

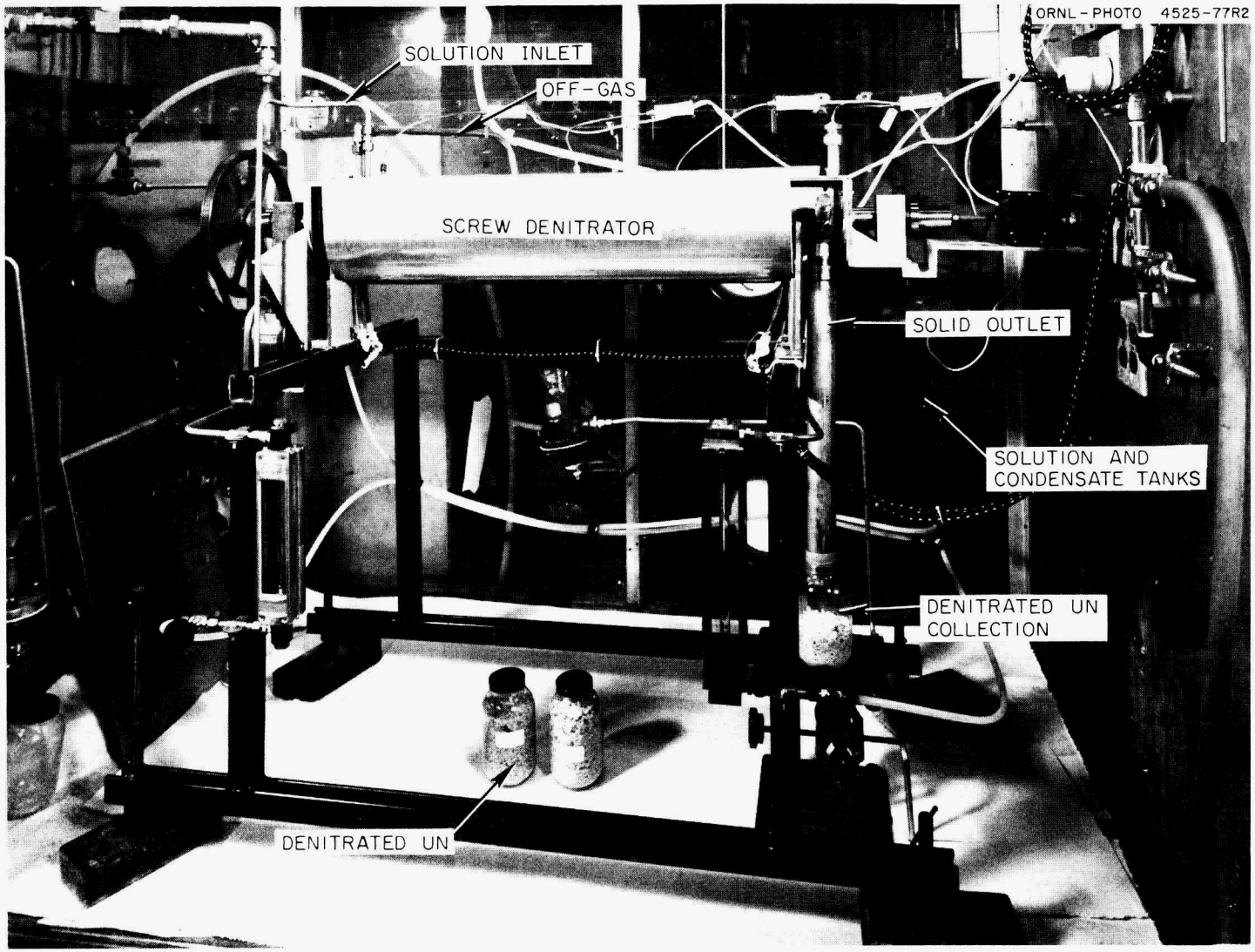

Fig. 9. Experimental setup for UO_3-solid preparation.

Starting solution - 7.3 liters of uranyl nitrate solution with 2.83 moles of uranium per liter

Flow into denitrators - 50-75 cm^3/min

Heating - 2 kW

Temperatures on thermocouples (Fig. 6) - No. 1, 140-170°C; No. 2, 240-300°C; No. 3, 100-110°C; No. 4, 480-550°C

Screw speed - 10-20 rpm

Product - 4 kg of UO_3 solid, including NO_3^- and H_2O residue; average composition: 78 wt % uranium, 5.0 wt % NO_3^-, 0.2 mole NO_3^-/mole U

Condensate - 5.2 liters with 2.84 moles of HNO_3 per liter

Achieved capacity - 2 kg of uranium per hour.

No problems were encountered during operation of the facility. In order to achieve a good solid discharge, the uranium melt should solidify, and therefore be chipped by the screw, before it reaches the opening. If the melt solidifies at the opening, it can be become plugged. Corrosion of the denitrator was not noticed. An analysis of the product showed only 122 ppm iron. Figure 10 is a photograph of the open screw denitrator after the experiment. The deposit at screw and cover indicates that in a section of the conveyor shortly behind the solution entrance, the solution boiled heavily and, therefore, solid splattered onto the cover and screwshaft. In the last third of the trough, the molten uranyl nitrate hexahydrate was further dehydrated, and most of the nitrate was driven off.

In the region of the last three screw flights, the melt solidified because of further decomposition and cooling induced mainly by the air

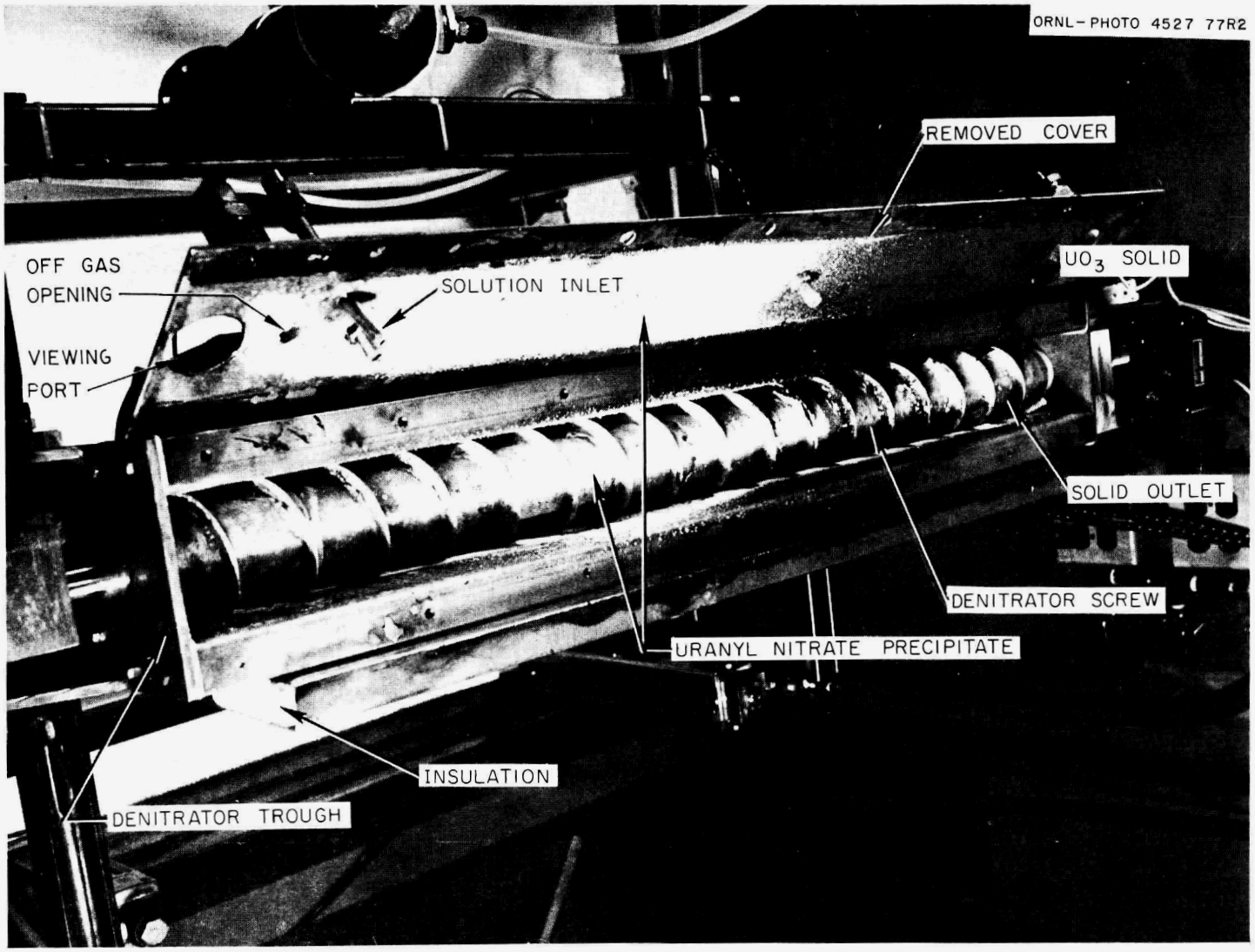

Fig. 10. Open screw denitrator after experiments.

suction through the outlet into the conveyor. The solid crumbled under the action of the screw movement into chiplike particles, and these discharged via the outlet pipe into a glass bottle. The particle size of the solid was mainly in the range 1 to 10 mm, although a small amount of dust was noticed. Figure 11 is a photograph of the product.

7. DISSOLUTION OF THE SOLID

Only limited and preliminary redissolving experiments were carried out. Some solid was dissolved in a beaker with distilled water at various temperatures and with a slight mixing action. At 25°C the nitrate/uranium ratio of the resulting solution was 1.5 moles NO_3^-/mole U, and the uranium concentration was 0.5 mole/liter. With increasing temperature, the acid deficiency decreased to $C_N/C_U = 1.7$ at 95°C. This value corresponds roughly with the data of Marshall et al.[12]

Rates of dissolution were not measured. At the above-mentioned acid deficiency, some residual fine solid remained in the beaker even at a very long dissolving time. Therefore, it can be assumed that a resin loading facility in connection with this thermal denitration process has to take care of some uranium slurry in order to achieve reasonable throughput. A previous study[13] showed that this condition did not lead to any problems.

8. CONCLUSION AND RESULTING PROCESS CHANGES

8.1 Flowsheet Changes

Because reasonable thermal denitration degree and rates are only achievable by going through the solid state, a dissolution step must be

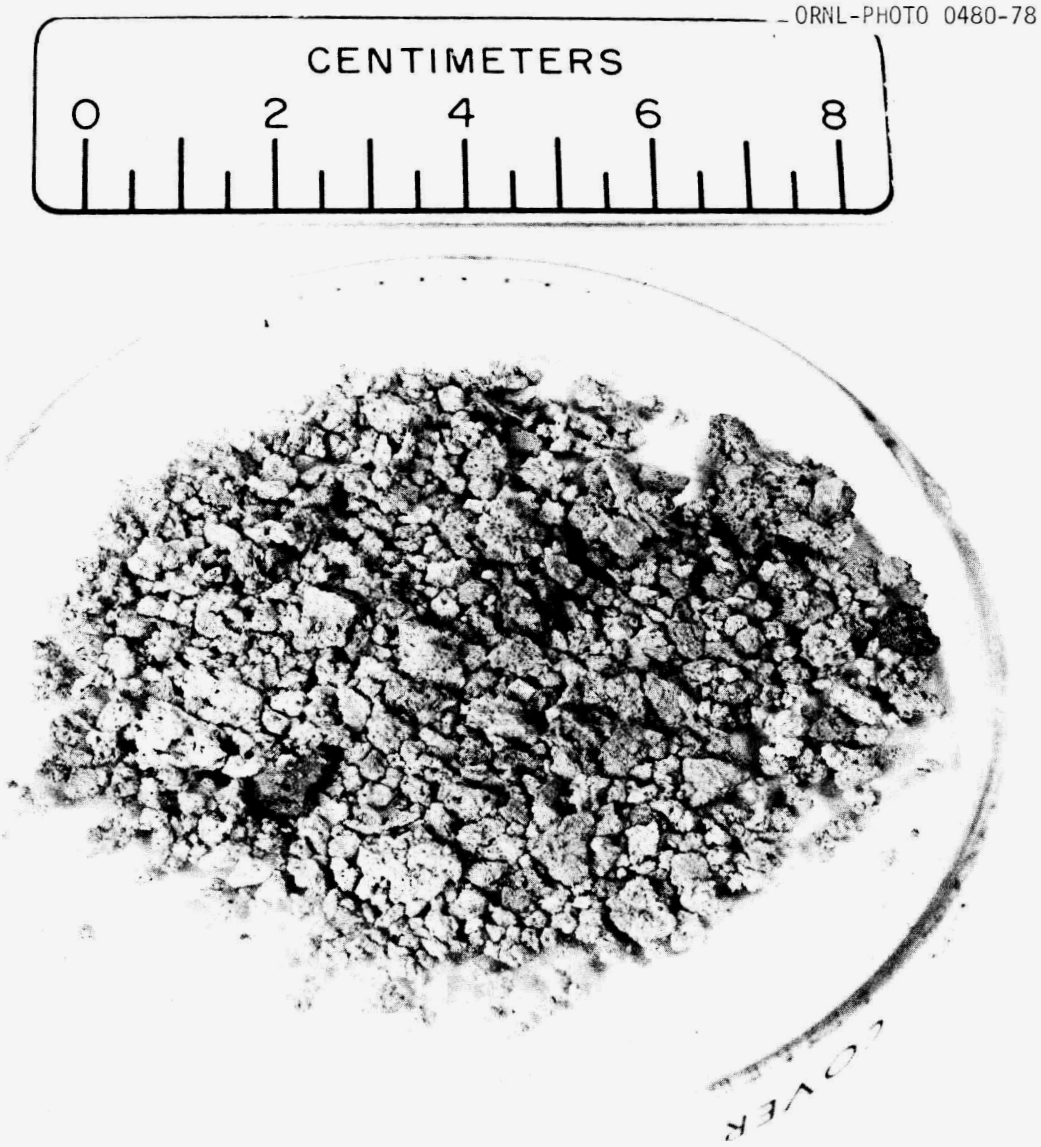

Fig. 11. Solid $UO_3 \cdot xH_2O$ produced by the screw denitrator.

inserted into the overall flowsheet for ADUN solution preparation and resin loading. Such a proposed flowsheet is shown in Fig. 12. Uranium nitrate solution (typically of 0.5 mole of uranium per liter, C_N/C_U = 2.2) is pumped into a holdup tank (TANK 1) with excess solution from the loading section. The resulting solution is transferred in an evaporator and concentrated to about 3 moles U/liter. The concentrate is fed into the screw conveyor for thermal denitration. The nitrogen oxides together with the vaporized water leaving this denitrator are condensed and collected in the condensate tank as dilute nitric acid. The solid from the denitrator (mostly UO_3) drops into a dissolver. In the dissolver most of the solid is redissolved under the action of a mechanical mixer. The resulting solution (C_U = 0.5 mole/liter; C_N/C_U = 1.6) and some slurry flow to the second holdup tank (TANK 2). From there the solution is pumped to the resin loading facility. The solution leaving the loading step, which has a typical composition of C_U = 0.4 mole/liter and C_N/C_U = 2.1, is recycled back to the dissolver.

If water is added for particle washing, the solution volume within this loading loop must be controlled. This may be accomplished by using a second evaporator or by recycling some solution back to the first holdup tank (TANK 1) as shown in the flowsheet.

Because the solid from the denitrator may be rather highly denitrated and because nitrate leaves the loop due to the solution volume control of the loading loop, a deficiency of nitrate in the loop is expected. The most efficient way of adding this nitrate is by transferring some concentrated solution from the evaporator effluent directly to the dissolver;

ORNL–DWG 78-2168 R

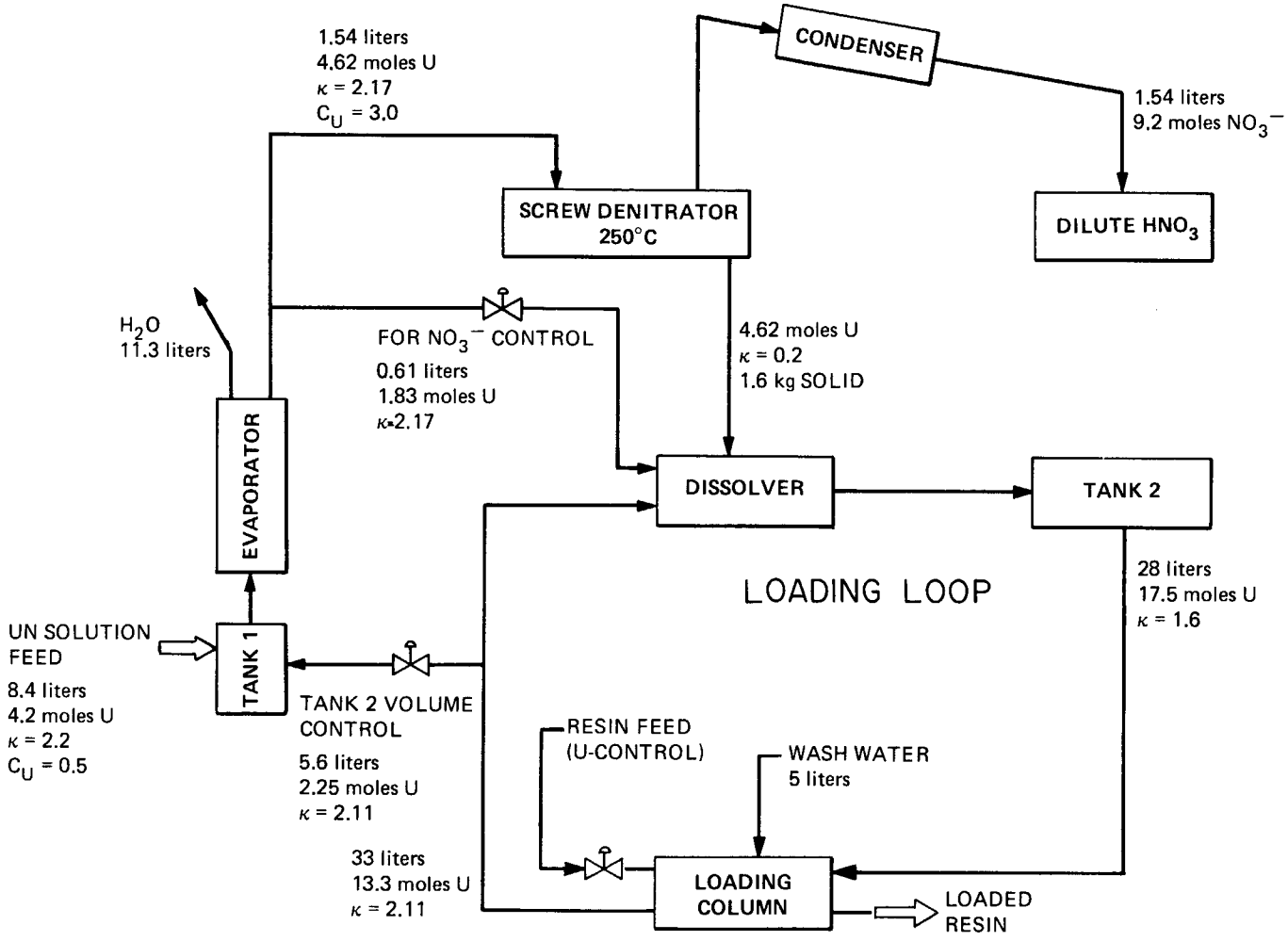

Fig. 12. Flowsheet for denitration and loading process under high denitration of the uranyl nitrate in the screw denitrator. Data given are for loading of 1 kg of uranium (κ = moles NO_3^-/mole U).

the accompanying uranium need not be processed in the denitrator. The uranium in the loading loop is controlled by adjusting the resin feed.

An advantage of high denitration of uranium nitrate over any possible low denitration, such as that achieved by steam stripping, is that less material is recycled in the process for nearly complete denitration than for partial denitration. The flowsheet in Fig. 12 shows that, for any nitrate which enters the loading loop from the denitrator, a corresponding amount of solution has to leave the loading loop and must be recycled through the denitrator.

From a nitrate and uranium balance of the loading and denitration process as shown in the principal flowsheet of Fig. 4, the following equation can be derived:

$$n_{U_{rec}} = \frac{\kappa_{den}}{\kappa_{rec} - \kappa_{den}} n_{U_{lod}} ,$$

where

$n_{U_{rec}}$ = moles of uranium recycled from resin loading to denitration,

$n_{U_{lod}}$ = moles of uranium loaded on resin,

κ_{den} = mole ratio of nitrate to uranium in the denitrated solution from the denitrator ($\kappa \equiv C_N/C_U$),

κ_{rec} = mole ratio of nitrate to uranium in the recycled solution from resin loading to denitration.

Solving the equation for $\kappa_{den} = 1.6$ and $\kappa_{rec} = 2.1$, the recycled uranium is 3.2 times the uranium loaded. This value decreases to 0.11 if κ_{den} equals 0.2 at constant κ_{rec} of 2.1. The process, as shown in Fig. 12, takes advantage of this fact. The denitration of the UO_3 solid leaving the denitrator is high (for example, $\kappa = 0.2$); even the uranyl nitrate solution entering the resin loading has the required denitration of $\kappa = 1.6$.

8.2 Proposed Improved Screw Denitrator and Dissolver Design

Based on the operation experience with the screw denitrator, the following improved screw denitrator with an added solid dissolver and holdup tank is suggested. Figure 13 is a sketch of this equipment. The diameter of the screw denitrator is relatively large compared to the screw length. The trough is heated on all sides. This design should provide a large heating surface and eliminate screw blocking due to screw shaft and trough bending; this bending caused by thermal expansion has given some operating problems with the existing design. Only the section of the trough at the discharge end is not heated; it may even be air cooled so that the melt cools and solidifies for trouble-free discharge. An equally spaced clearance of about 2 mm exists between the screw and the inside trough surface. The screw itself has a paddle-like design to achieve a mixing effect and to ensure that the originating gases can easily pass the screw to the gas outlet. The solid is discharged directly into a dissolver unit that consists of a vessel with a built-in turbine mixer for rapid solid dispersion and dissolution. The outlet of the dissolver is a settling tube with baffles and leads directly into a holdup tank.

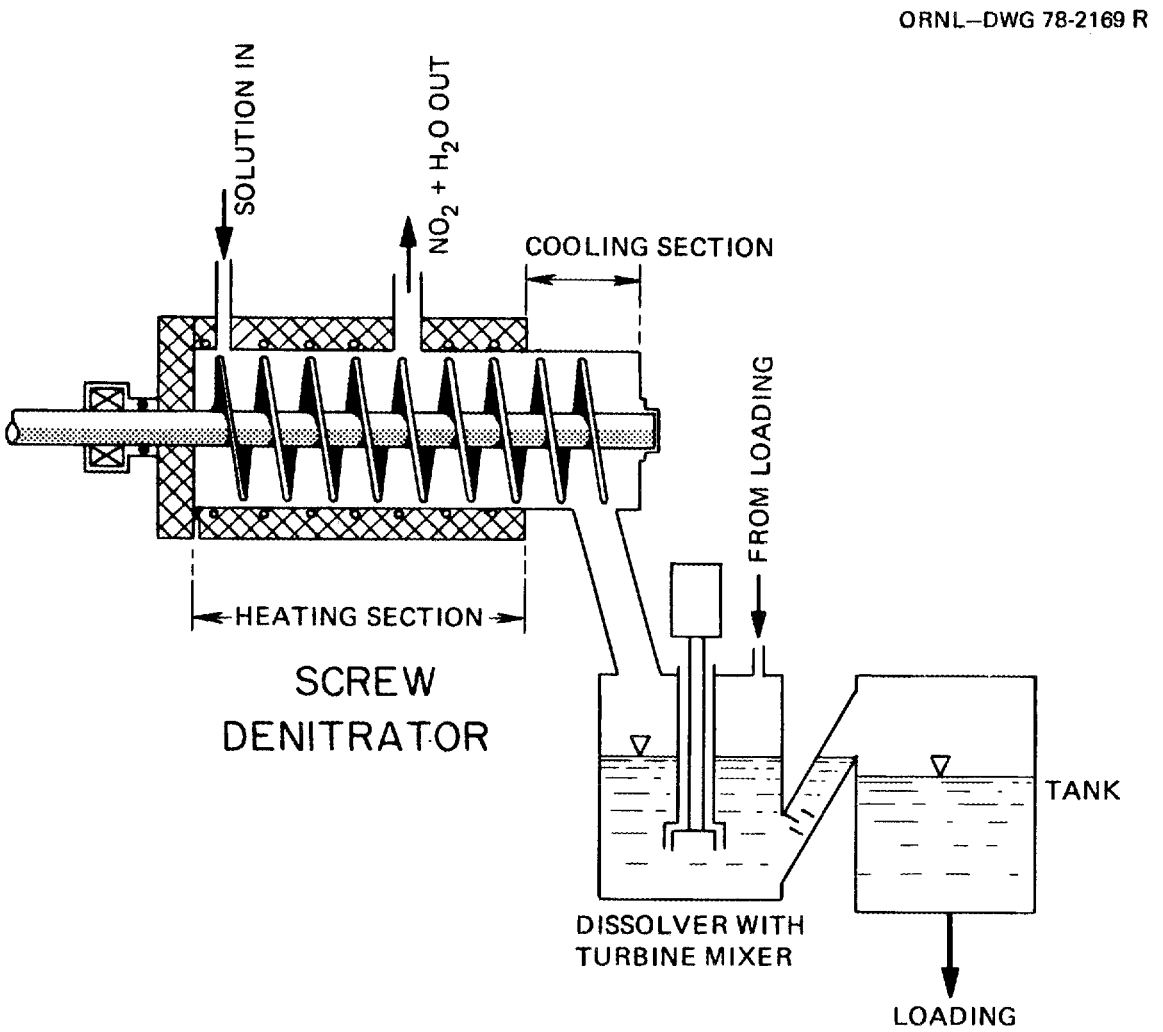

Fig. 13. Sketch of thermal denitration facility with improved screw denitrator and dissolver.

9. SUMMARY

Production of a denitrated solution or slurry by the proposed thermal denitration, which is similar to a steam stripping denitration, is not promising for three reasons:

1. It is not practical to achieve a nitrate-to-uranium mole ratio of 1.6 and still discharge a liquid solution or slurry; that is, the process material becomes solid before enough nitrate is removed to give the 1.6 ratio.
2. The rate of nitrate removal is low; therefore, the heat transfer requirements and equipment size would be excessive.
3. Operation to give a product with $C_N/C_U = 1.6$ results in recycle of excessive uranium through the denitration step. This is inefficient as compared to a more complete denitration.

Therefore, the thermal denitration should be accomplished by producing a highly denitrated but still easily dissolvable ($UO_3 + xH_2O$) solid. With the existing screw denitrator, UO_3 solid has been produced with a nitrate-to-uranium mole ratio of 0.2 at a rate of 2 kg UO_3/hr and a power consumption of 2 kW. The solid has to be redissolved to achieve an acid-deficient uranium nitrate solution for WAR loading. A new design of the screw denitrator in connection with a dissolver could improve the process efficiency.

10. REFERENCES

1. J. D. Sease and A. L. Lotts, Development of Processes and Equipment for the Refabrication of HTGR Fuels, ORNL/TM-5334 (June 1976).
2. N. Abd El Monem, Verfahren zur Herstellung von Uranbrennstoff-Partikeln über die Beladung von Ionenaustauscherharzen, Jül-1494, KFA Jülich, West Germany, (March 1978).
3. P. A. Haas, Resin-Based Preparation of HTGR Fuels: Operation of an Engineering-Scale Uranium Loading System, ORNL-5300 (October 1977).
4. E. L. Youngblood et al., Laboratory and Pilot-Plant Studies on the Conversion of Uranyl Nitrate Hexahydrate to UF_6 by Fluidized-Bed Processes, ORNL/TM-5913 (June 1977).
5. P. A. Haas, HTGR Fuel Development: Use of UO_3 to Load Cation Exchange Resin for Microsphere Preparation, ORNL/TM-3817 (September 1972).
6. K. J. Notz, Partial Thermal Denitration of UNH: Preliminary Experiments, GCR: 74-16 (July 1974), internal memorandum.*
7. P. A. Haas, HTGR Fuel Development: Preparation of Acid-Deficient Uranyl Nitrate by Steam Stripping of Nitric Acid from Molten Uranyl Nitrate, GCR: 75-2 (March 1975), internal memorandum.*
8. R. H. Rainey, Denitration of Uranyl Nitrate Solutions by Steam Stripping, GCR: 74-17 (September 1975), internal memorandum.*
9. C. D. Harrington and A. E. Ruehle, Uranium Production Technology, Van Nostrand, Princeton, N.J., 1959.

*Available only to HTGR Program personnel.

10. A. G. Krigens, A Compilation of Physical and Chemical Properties of Materials and Streams Encountered in the Chemical Processing Department, ARH-724, Atlantic Richfield Hanford Co., Richland, Wash. (July 1968).

11. R. E. Felt, Fluorination Reactivity of Plutonium Dioxide Prepared by Direct Calcination of Plutonium Nitrate in a Screw Calciner, RL-SEP-675, Hanford Atomic Products Operation, Richland, Wash. (December 1965).

12. W. L. Marshall and R. Slusher, "The Solubility of UO_3 Hydrates in HNO_3-H_2O Solutions," J. Inorg. Nucl. Chem. 25, 283-90 (1963).

13. K. J. Notz et al., Slurry Loading of Weak-Acid Resin with Uranium in a Continuous Column, GCR-76/25 (November 1976), internal memorandum.*

*Available only to HTGR Program personnel.

ORNL/TM-6264
Dist. Category UC-77

INTERNAL DISTRIBUTION

1. P. Angelini
2. B. J. Baxter
3. R. L. Beatty
4. R. J. Beaver
5. R. A. Bradley
6. A. J. Caputo
7. J. A. Carpenter
8. W. L. Carter
9. D. A. Costanzo
10. B. F. Crump
11. F. L. Daley
12. R. G. Donnelly
13. W. P. Eatherly
14. D. E. Ferguson
15-19. P. A. Haas
20. F. E. Harrington
21. C. C. Haws
22. R. F. Hibbs
23. R. M. Hill
24. F. J. Homan
25. J. D. Jenkins
26. D. R. Johnson
27-36. P. R. Kasten
37. J. J. Kurtz
38. W. J. Lackey
39. R. E. Leuze
40. K. H. Lin
41. T. B. Lindemer
42. E. L. Long, Jr.
43-44. A. L. Lotts
45. A. P. Malinauskas
46. L. E. McNeese
47. F. H. Neill
48-49. K. J. Notz
50. A. R. Olsen
51. H. Postma
52. R. H. Rainey
53. D. P. Reid
54-57. H. D. Ringel
58. A. D. Ryon
59. T. F. Scanlan
60. C. D. Scott
61. J. H. Shaffer
62. W. D. Simpson
63. J. W. Snider
64. R. D. Spence
65. P. E. Stein
66. D. P. Stinton
67. R. R. Suchomel
68. T. N. Tiegs
69. D. B. Trauger
70. V. C. A. Vaughen
71. J. R. Weir
72-73. R. G. Wymer
74-75. Central Research Library
76. Laboratory Records, R.C.
77-78. Laboratory Records
79. Document Reference Section
80. ORNL Patent Section
81. G. R. Choppin (consultant)
82. L. J. Colby, Jr. (consultant)
83. E. L. Gaden, Jr. (consultant)
84. L. E. Swabb, Jr. (consultant)
85. K. D. Timmerhaus (consultant)

EXTERNAL DISTRIBUTION

86. Research and Technical Support Division, DOE, ORO, P. O. Box E, Oak Ridge, TN 37830
87. Director, Reactor Division, DOE, ORO, P. O. Box E, Oak Ridge, TN 37830
88-89. Director, Nuclear Power Development Division, DOE, Washington, D. C. 20545
90-266. Given distribution as shown in TID-4500 under Gas-Cooled Reactor Technology Category (25 copies - NTIS)

☆U.S. GOVERNMENT PRINTING OFFICE: 1978-740-190/157