OAK RIDGE NATIONAL LABORATORY LIBRARIES

3 4456 0551011 3

ORNL/TM-5726
(Vol. 2 of ORNL/TM-5725)

Cy. 47

ORNL Fission Counter FC-3 Quality Assurance Report, Vol. 2: Fission Counter Specifications and Assembly/Testing Procedures

W. T. Clay
J. T. De Lorenzo
V. K. Paré
G. C. Guerrant

[redacted]

OAK RIDGE NATIONAL LABORATORY
CENTRAL RESEARCH LIBRARY
DOCUMENT COLLECTION
LIBRARY LOAN COPY
DO NOT TRANSFER TO ANOTHER PERSON
If you wish someone else to see this document, send in name with document and the library will arrange a loan.
UCN-7969
(3 3-67)

OAK RIDGE NATIONAL LABORATORY
OPERATED BY UNION CARBIDE CORPORATION FOR THE ENERGY RESEARCH AND DEVELOPMENT ADMINISTRATION

Printed in the United States of America. Available from
the Energy Research and Development Administration,
Technical Information Center
P. O. Box 62, Oak Ridge, Tennessee 37830
Price: Printed Copy $4.50; Microfiche $3.00

This report was prepared as an account of work sponsored by the United States Government. Neither the United States nor the Energy Research and Development Administration/United States Nuclear Regulatory Commission, nor any of their employees, nor any of their contractors, subcontractors, or their employees, makes any warranty, express or implied, or assumes any legal liability or responsibility for the accuracy, completeness or usefulness of any information, apparatus, product or process disclosed, or represents that its use would not infringe privately owned rights.

ORNL/TM-5726
(Vol. 2 of ORNL/TM-5725)
Dist. Category
UC-79 and -79m

Contract No. W-7405-eng-26

INSTRUMENTATION AND CONTROLS DIVISION

ORNL FISSION COUNTER FC-3 QUALITY ASSURANCE REPORT, VOL. 2: FISSION COUNTER SPECIFICATIONS AND ASSEMBLY/TESTING PROCEDURES

W. T. Clay
J. T. De Lorenzo V. K. Paré G. C. Guerrant

Date Published - March 1977

NOTICE: This document contains information of preliminary nature. It is subject to revision or correction and therefore does not represent a final report

OAK RIDGE NATIONAL LABORATORY
Oak Ridge, Tennessee 37830
operated by
UNION CARBIDE CORPORATION
for the
ENERGY RESEARCH AND DEVELOPMENT ADMINISTRATION

OAK RIDGE NATIONAL LABORATORY LIBRARIES
3 4456 0551011 3

Reports in this series are as follows:

ORNL/TM-5725	ORNL Fission Counter FC-3 Quality Assurance Report, Vol. 1: Fission Counter Development
ORNL/TM-5726	ORNL Fission Counter FC-3 Quality Assurance Report, Vol. 2: Fission Counter Specifications and Assembly/Testing Procedures

ABSTRACT

The ORNL fission counter FC-3 was developed as the first step toward an advanced neutron detection system for the use in LMFBRs. This counter has a neutron sensitivity of 0.77 count sec^{-1} $[nv(th)]^{-1}$ when operated at 400°C (750°F) in a 10^6 R/hr gamma background. The pulse electronics for signal processing were designed so that the overall performance of the entire detection system would be near optimum. This document describes specifications and the assembly and testing procedures for the FC-3 fission counter. This information is given in compliance with the requirements of the ORNL quality assurance program.

PREFACE

The *ORNL Fission Counter FC-3 Quality Assurance Report* consists of two volumes:

Vol. 1: Fission Counter Development, ORNL/TM-5725

Vol. 2: Fission Counter Specifications and Assembly/Testing Procedures, ORNL/TM-5726.

Volume 1 is a general description of the entire development program. Volume 2 contains specific information such as specifications, assembly procedures, and testing procedures that were developed as part of this program and would be essential for fabrication of another counter.

In these two documents, mention of a product brand neither endorses the product nor implies a preference over other products for the same purpose.

CONTENTS

Page

1. INTRODUCTION 1

2. MATERIAL SPECIFICATIONS, CERTIFICATION AND VENDORS 1

2.1 Zirconium . . . . . .

2.2 Stainless Steel Pipe 2

2.3 Stainless Steel Tubing 2

2.4 Other Stainless Steel 2

2.5 Nickel Tube 2

2.6 Alumina 2

2.7 MI Cable 3

2.8 Cable End-Seals 3

2.9 Uranium Coating 3

2.10 Counting Gas 4

3. MI CABLE ASSEMBLY PROCEDURES 4

3.1 Cold-End Subassembly 4

3.2 Hot-End Subassembly 6

4. DIAGRAMS FOR INSTRUMENTATION TEST SET-UPS 9

5. FISSION COUNTER FC-3 ASSEMBLY PROCEDURE 18

6. HELIUM LEAK TEST PROCEDURE 23

7. HEAT TREATMENT PROCEDURE 24

8. VACUUM BAKE PROCEDURE 24

9. ELECTROPOLISHING PROCEDURE 25

9.1 Preparation and Cleaning 25

9.2 Electropolishing 25

9.3 Posttreatment 26

10. SPOT-WELDING PROCEDURES 26

10.1 SWP-1: Wire to Electrode 26

10.2 SWP-2: Wire to Cable Hot-End Seal 27

10.3 SWP-3: Wire to Cable Cold-End Seal 27

Page

11. WELDING PROCEDURES 28
    11.1 WP-1 Welding Parameters 29
    11.2 WP-2 Welding Parameters 30
    11.3 WP-4 Welding Parameters 31
    11.4 WP-5 Welding Parameters 32
    11.5 WP-6 Welding Parameters 33
    11.6 WP-7 Welding Parameters 34

12. ELECTRONIC CALIBRATION 35

13. COMPARISON OF INTEGRAL PULSE HEIGHT DISTRIBUTION CURVES 37

14. FISSION COUNTER TEMPERATURE TESTING PROCEDURE 39

15. REFERENCES 41

1. INTRODUCTION

The authors prepared this and a companion document (Vol. 1, ref. 1) to record the development of a fission counter (FC-3) for reactor in-core service so that its faithful reproduction in any subsequent fabrication will be ensured and that its expected performance will be duplicated. The principal objective of this work was to develop a neutron sensor that would operate as a low-level flux monitor (LLFM) during reactor startup and as a subcriticality monitor at extremely high temperatures and in high gamma backgrounds experienced in-core in a liquid-metal fast breeder reactor (LMFBR). This document and its companion Volume 1 were prepared in response to the quality assurance program at Oak Ridge National Laboratory (ORNL). The principal objective of this program is that it shall provide a means for the establishment, control, and verification of the required quality of design, development, procurement, fabrication, construction, inspection, installation, operation, and maintenance of all experimental or conventional operational and test facilities and systems.

2. MATERIAL SPECIFICATIONS, CERTIFICATION, AND VENDORS

Specific information concerning the materials used in the construction of FC-3 are listed in this section. Five ORNL drawings (Q-5419) comprise the complete set of drawings for the fission counter assembly. When reference is made to a specific part in the remainder of this report, the part numbers on these four drawings will be used.

2.1 Zirconium

The gamma shield was fabricated from zirconium depleted in hafnium to 100 ppm. The shield was purchased from the Teledyne Corp., Wah Chang Division, P.O. Box 460-T, Albany, Oregon.

2.2 Stainless Steel Pipe

The stainless steel (304L) pipe used for fabricating part 7-3 was purchased from ORNL Stores. It was specified in RDT Standards M7-3T and F3-3T, Level L-2, and also in ASTM A-479.

2.3 Stainless Steel Tubing

The thin-wall tubes for the three electrodes (part numbers 14-4, 15-4, and 16-4) were formed from AISI, type 304 annealed, stainless steel, cold-rolled, flat sheet. The seams were TIG welded and x-ray inspected. The tubes were roller forged to the desired wall thickness, degreased, annealed, sized, cleaned, inspected, packed to preserve cleanliness, and finally boxed for shipment. The tube tolerances were as follows: length, ±0.127 mm (±0.005 in.); wall thickness, ±0.0508 mm (±0.002 in.); and maximum out of round, 0.762 mm (0.030 in.). The tubes were purchased from the Western Pneumatic Tube Company, P.O. Box W, Kirkland, Washington.

2.4 Other Stainless Steel

Stainless steel (304L) for fabrication of all other stainless steel parts in the fission counter was purchased from ORNL Stores. It was specified in Y-MS-107 as well as ASTM A-312, A-269, A-380, and A-262 Practice C.

2.5 Nickel Tube

The nickel tube used for fabricating part 20-4 was purchased from ORNL Stores. It was specified in ASTM B 161-61.

2.6 Alumina

The alumina (99.5% Al_2O_3) for fabrication of the step insulators (parts 17-4 and 18-4) was ALSIMAG-753. They were purchased preground according to the drawings from the American Lava Corp., Chattanooga, Tennessee.

2.7 MI Cable

The mineral-insulated (MI) coaxial cable (part 22-4) was Thermocoax $1Z_5A_cCA_c40$. It is a laminated (stainless steel-copper-stainless steel) coaxial cable, 4 mm OD. The 99.6% pure MgO dielectric was compacted to ⩾ 90%. The cable was back filled with nitrogen, and both ends were sealed with waterproof, plastic, heat-shrinkable tubing. The insulation resistance was ⩾ 10^{13} Ω/m at room temperature and ⩾ 10^{9} Ω/m at 500°C (930°F). The characteristic impedance was 50 Ω, and the capacitance was 185 pf/m max. It was purchased from Sodern, 10 rue de la Passerelle, Suresnes (Seine), France.

2.8 Cable End-Seals

2.8.1 Hot-End Seal

The seal on the high-temperature end of the cable located inside the fission counter (part 21-4) is a metal-to-ceramic seal. It is a variation of the standard CE-1170 seal sold by Quartex, 19 Rue Poliveau, Paris 5e, France.

2.8.2 Cold-End Seal

The cold-end seal (part 1-26) connects the high temperature cable to the instrumentation, and is located in a nonhostile environment. The seal is a metal-to-ceramic, weldable hermetic connector. It is a modification of the standard 804B5230-1 sold by Ceramaseal Corp., New Lebanon Center, New York.

2.9 Uranium Coating

The three cylindrical electrodes (parts 14-4, 15-4, and 16-4) were electroplated with a total of 2.3163 g (5% safety factor) enriched (>99.9%) $^{235}U_3O_8$ by Reuter-Stokes, Inc., 18530 S. Miles Parkway, Cleveland, Ohio. The coating thickness is 2.0 ± 0.1 mg/cm^2, and the uniformity is within ±15%. The coatings were applied as follows:

1. One on the outside of the tube, 4.674 cm (1.840 in.) OD, 0.508 mm (0.020 in.) thick wall, and 17.780 cm (7.000 in.) long.

2. One each on the outside and the inside of the tube, 5.080 cm (2.00 in.) OD, 0.508 mm thick wall, and 17.463 cm (6.875 in.) long.

3. One on the inside of the tube, 5.486 cm (2.160 in.) OD, 0.508 mm thick wall, and 17.145 cm (6.875 in.) long.

Up to 0.318 cm (0.125 in.) on each end of the tubes was left uncoated.

Prior to the ^{235}U electroplating, the tubes were vacuum baked at 870°C (1600°F), and afterward at >590°C so that the coatings would not flake or crack from the surfaces. The electrodes were handled carefully because some of the coating material could be rubbed from the surfaces.

The three uncoated tubes were shipped to Reuter-Stokes in a helium-leak-checked, reusable metal container filled with pure argon to a pressure of 1520 torr (2 atm abs). The coated tubes were returned to ORNL in the same container filled with pure argon to a pressure of 1520 torr.

Records were kept of all metallic impurities used under the electrodeposited U_3O_8 . The thickness of the U_3O_8 coating plus the metallic impurity coating did not exceed 0.050 mm.

2.10 Counting Gas

The fission counter was filled with a mixture of 90% argon (99.9995% pure) and 10% nitrogen (99.998% pure). The gases were purchased separately and mixed when the fission counter was filled.

3. MI CABLE ASSEMBLY PROCEDURES

Both ends of the MI cable assembly for the fission counter were fabricated, assembled, and tested according to the following procedures. The cold-end subassembly connects to the instruments and the hot-end subassembly is located inside the fission counter.

3.1 Cold-End Subassembly

The procedure for fabricating the cold-end subassembly was as follows:

1. Silver solder part 23-4 into the back of part 24-4. Wash all parts in hot water to remove excess flux.

2. Electropolish all cold-end parts except the cable (part 22-4) and connector (part 26-1) according to the "Electropolishing Procedure," Sect. 9.

3. Clean all parts to be assembled in acetone and then alcohol in an ultrasonic cleaner for 15 min in each solution. Store the parts in plastic bags until needed.

4. Remove the heat shrinkable cover from one end of the cable and put this end into the metal-sheath stripper. Cut back the metal sheath to expose 1.27 cm (0.5 in.) of center wire. Remove any burrs.

5. Carefully clean the center wire with a glass brush.

6. Slip a 3.81-cm-long (1.5 in.) piece of heat shrinkable tubing onto the cable.

7. Slip part 24-4 onto the cable.

8. Spot weld the cable center-wire to the connector pin [leave 0.64 cm (0.25 in.) between the cable and the connector pin] as described in "Spot-Welding Procedures," Sect. 10.3, "Wire to Cable Cold-End Seal."

9. Carefully push part 24-4 to mate with the connector (keep the center wire slightly snug). Tack weld part 24-4 to the cable as described in "Welding Procedures," Sect. 11, "WP-7 Welding Parameters."

10. Remove the heat shrinkable cover from the other end of the cable. Check the electrical continuity through the cable and connector. If it is $\leqslant 1.5\ \Omega/m$, replace the heat shrinkable cover.

11. Weld part 24-4 to the cable; then weld the connector to part 24-4 as described in "Welding Procedures," Sect. 11, "WP-7 Welding Parameters" and "WP-5 Welding Parameters."

12. Helium leak test the cold-end subassembly through the 1/16 in. evacuation tube. Follow the "Helium Leak Test Procedure," Sect. 6.

13. Repeat step 10.

14. Place the subassembly on the vacuum system and apply heat occasionally until the insulation resistance is $\geqslant 10^{14}$ Ω at room temperature. A heat gun or heating tape may be used.

15. With a cold trap in the gas filling line of the vacuum system, back fill the cold-end subassembly with nitrogen to a pressure of 1520 torr.

16. Remove the cable from the vacuum system by a cold-weld crimp. Leave the evacuation tube (part 23-4) 12.7 cm (5 in.) long. Solder the cold-weld crimp with 60/40 solder.

17. Repeat step 10.

18. Check the insulation resistance of the subassembly. It should be $\geqslant 10^{14}$ Ω.

19. Spiral-bend the evacuation tube (part 23-4) around part 24-4.

20. Shrink the piece of heat shrinkable tubing over part 23-4 [0.16 cm (0.063 in.) OD].

3.2 Hot-End Subassembly

The procedure for fabricating the hot-end subassembly was as follows:

1. Vacuum bake all hot-end parts except the cable (part 22-4) and the hot-end seal (part 21-4). Follow the "Vacuum-Bake Procedure," Sect. 8.

2. Electropolish all hot-end parts except the cable (part 22-4) and the hot-end seal (part 21-4). Follow the "Electropolishing Procedure," Sect. 9.

3. Clean all parts to be assembled in acetone and then alcohol in an ultrasonic cleaner for 15 min in each solution. Store the parts in plastic bags until needed.

4. Cut the cable to the desired length, and cover the hot end with a heat shrinkable cover. (The heat shrinkable cover will not be needed if the next step is started immediately.)

5. Remove the heat shrinkable cover from the cable hot end, and position the hot end in the metal-sheath stripper. Cut back the metal sheath to expose 3.175 cm (1.25 in.) of center wire. Remove any burrs.

6. Carefully clean the exposed center wire with a glass brush.

7. Position the cable back in the metal-sheath stripper, and reduce the diameter to 0.351 cm (0.138 in.) for a length of 0.635 cm so that it will fit snugly in the cable end seal (part 21-4).

8. Slip part 9-3 over the cable.

9. Slip the end seal (part 21-4) over the cable, and cut off the center wire so that it is 0.079 cm (0.032 in.) longer than the center tube of the end seal.

10. Check the continuity of the center wire through the cable and connectors. It should be $\leqslant 1.5\ \Omega/m$ of cable.

11. Weld the end seal to the cable, and helium leak test the weld through the seal. Follow the "Helium Leak Test Procedure," Sect. 6, and the "Welding Procedures," Sect. 11, "WP-6 Welding Parameters."

12. Fabricate the vacuum enclosure assembly (ORNL drawing Q-5419-2).

13. Place the end of the cable with the hot-end seal in a vacuum enclosure. Occasionally heat and evacuate the subassembly until the insulation resistance is $\geqslant 10^{14}\ \Omega$ at room temperature. Back fill with nitrogen (99.998% pure) to 1520 torr. A heat gun or heating tape may be used.

14. Remove the vacuum enclosure and weld the center tube of the hot-end seal (part 21-4) closed, capturing the center wire in the weld. <u>This step must be done rapidly</u>. Follow the "Welding Procedures," Sect. 11, "WP-2 Welding Parameters."

15. Clean the cable end seal with acetone and then alcohol.

16. Repeat step 10.

17. Measure the insulation resistance. It should be $\geqslant 10^{14}$ Ω.

18. Tack-weld part 9-3 to the cable (see ORNL drawing Q-5419-2, "Cable Hot-End Subassembly," for proper positioning). Make the final weld according to the "Welding Procedures," Sect. 11, "WP-7 Welding Parameters."

19. Clean the hot-end seal with acetone and then alcohol.

20. Repeat steps 10 and 17.

21. Weld part 9-3 to part 28-2 according to the "Welding Procedures," Sect. 11, "WP-4 Welding Parameters."

22. Helium leak check the assembly according to the "Helium Leak Check Procedure," Sect. 6.

23. Evacuate the subassembly and back fill it with a mixture of 90% argon and 10% nitrogen to 1900 torr (2.5 atm abs).

24. Place the cable hot-end subassembly in the furnace.

25. Measure the voltage breakdown at two different pulse height selector (PHS) settings at room temperature and with 27-nsec filters [see Sect. 4 of Vol. 1 (ref. 2)]. Apply 200, 250, 300, 350, and 400 V to the cable, and at each voltage record the observed count rate for 10 sec. The PHS should be set first so that there is ∿1.0 count/10 sec of electronic noise, and then so that there are ∿100 counts/10 sec of electronic noise.

    Use these two PHS settings during the remainder of the test. Measure the insulation resistance with 200 V applied to the cable. <u>If there is any indication of voltage breakdown, turn the voltage off</u>.

26. Repeat step 25 at the prescribed temperatures. Record these data during a period of the day when the ac line noise level is low.

27. Cut off the test can (part 28-2) from part 9-3 such that the largest diameter of part 9-3 is 1.588 cm (0.625 in.).

28. The pretested cable assembly may now be stored. Later, it will be welded into the fission counter housing.

4. DIAGRAMS FOR INSTRUMENTATION TEST SET-UPS

During the fabrication and testing of the cable assemblies and the fission counter at ORNL, different electrical tests are specified. Diagrams for each test set-up are shown in Figs. 1-8, as follows:

1. Cable subassembly breakdown-noise test.
2. Fission counter, integral bias pulse height distribution and breakdown-noise test.
3. Instrumentation.
4. RC-CR filters for current pulse instrumentation used in testing fission counters and cables.
5. Fission counter resistance test.
6. Cable insulation resistance test.
7. I_{DC} measurement of alpha and/or neutron currents.
8. To maintain high voltage on the fission counter or cable subassembly when no other electrical test is in progress.

The following list designates the instrumentation shown in Figs. 1-8 that was used in testing the ORNL Fission Counter FC-3:

DPA	Current-pulse preamplifier, low noise, model E-115-252, by Gulf Electronic System, San Diego, CA. This preamplifier was patterned after ORNL Q-5095, which was developed at ORNL in a quality assurance program for the ERDA-RRD.
HV	High voltage supply, regulated, model 240, by Keithley Instruments, Cleveland, OH.
A	Dual linear amplifier, model 133B, by Le Croy Research Systems Corp., Nyack, NY.
Disc.	Dual discriminator, model T 105/N, by EG&G, Salem, ME.
Counter-timer	Dual counter-timer, model TC-555P/A, by Tennelec, Inc., Oak Ridge, TN.
Electrometer	Microammeter, model 411, by Keithley Instruments, Cleveland, OH.

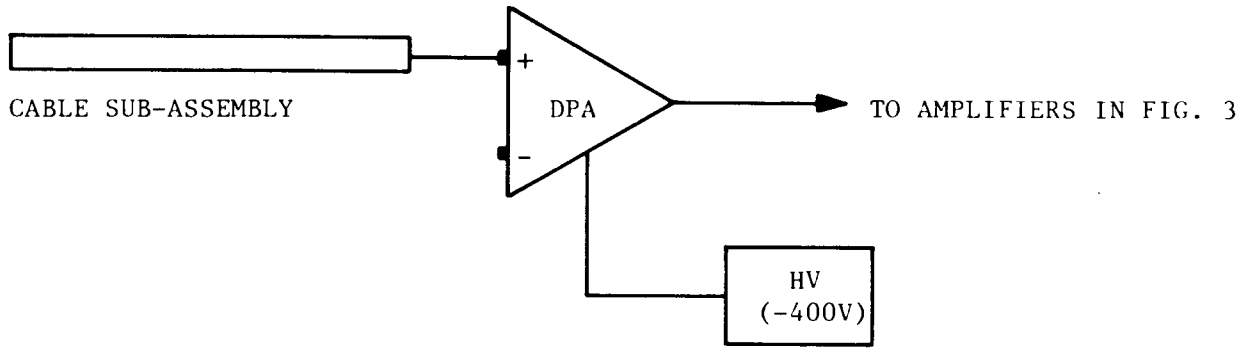

NOTE: For single-ended operation of the Differential Preamp (DPA) used in this test, deactivate the negative input by temporarily removing four transistors (Q5, Q6, Q7, and Q8).

Fig. 1. Diagram of breakdown noise test of cable subassembly.

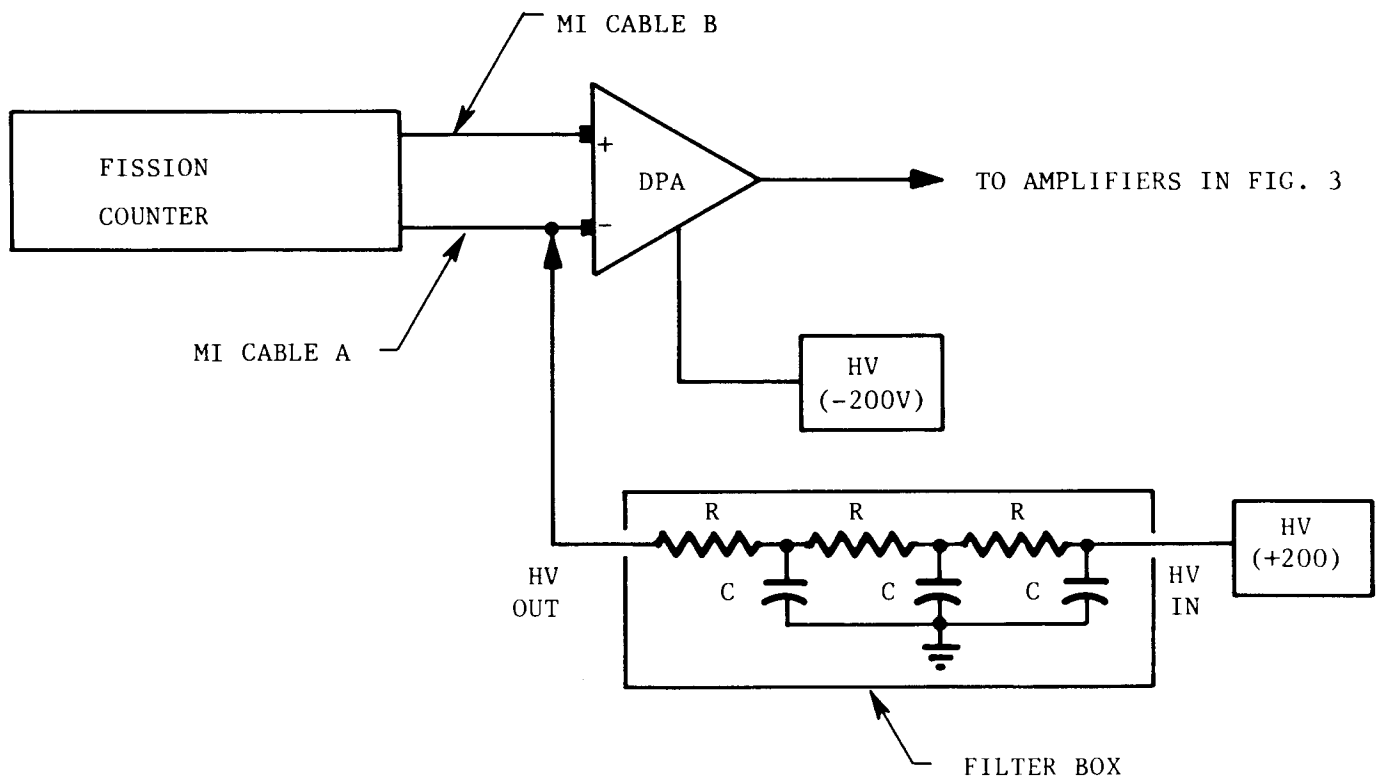

NOTE: The value of the components in the high voltage filter box is as follows:

R = 31.6KΩ; ±1%; 1/4 watt metal-film

C = 0.1 MFD; 500 volts

Fig. 2. Diagram of tests of integral bias pulse height distribution and breakdown noise of fission counter.

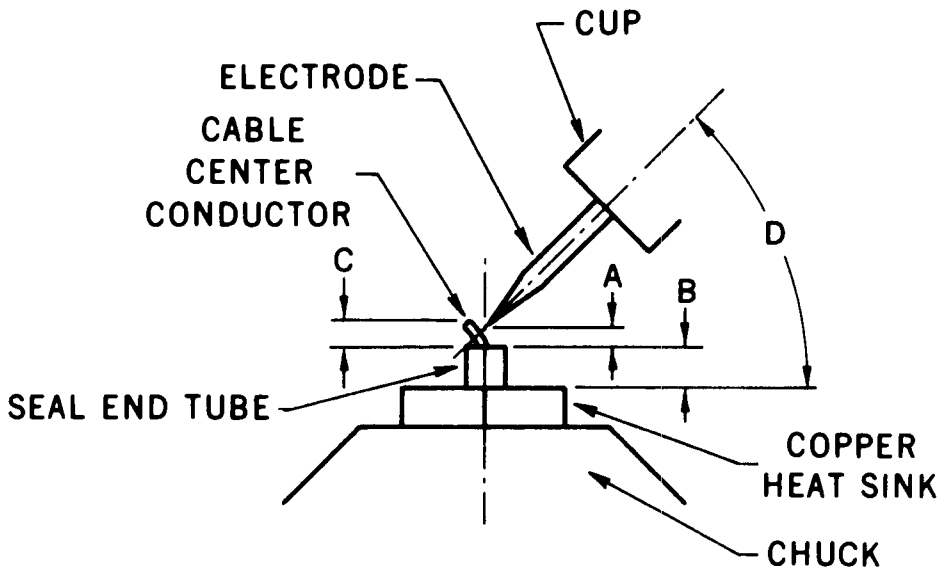

Fig. 3. Diagram of instrumentation.

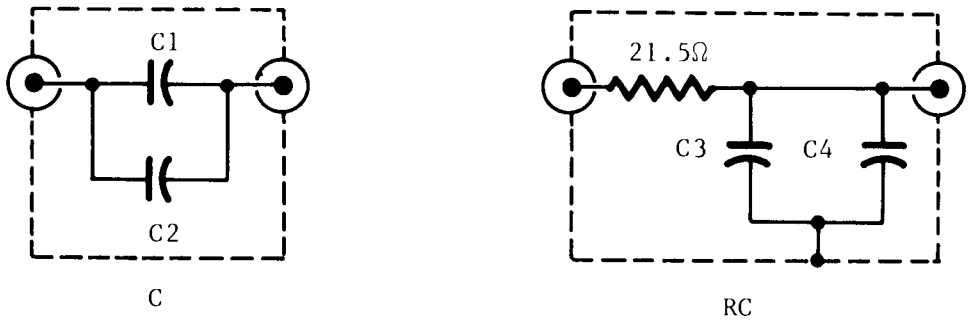

FILTER TIME CONSTANT (nsec)	C		RC	
	C1 (pfd)	C2 (pfd)	C3 (pfd)	C4 (pfd)
7.0	150	None	470	None
13.5	270	None	910	None
20.0	390	None	1330	None
27.0	470	68	1800	None
36.0	680	39	2200	200
50.0	1000	None	3300	None
100.0	2000	None	3300	3300
150.0	3000	None	10000	None
200.0	3900	None	10000	3300

Fig. 4. RC-CR filters for current-pulse instrumentation used to test fission counters and cables.

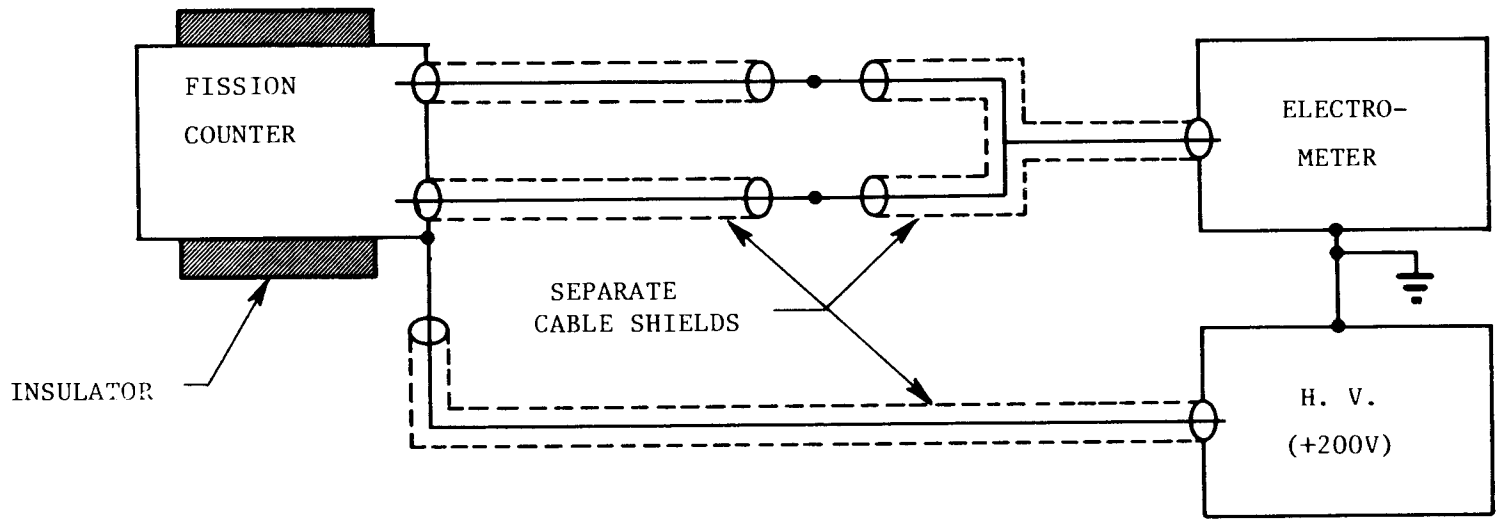

CAUTION: Care must be taken since the outside shell of the fission counter and MI cables will be at high voltage potential for this test.

Fig. 5. Diagram for insulation resistance test of fission counter.

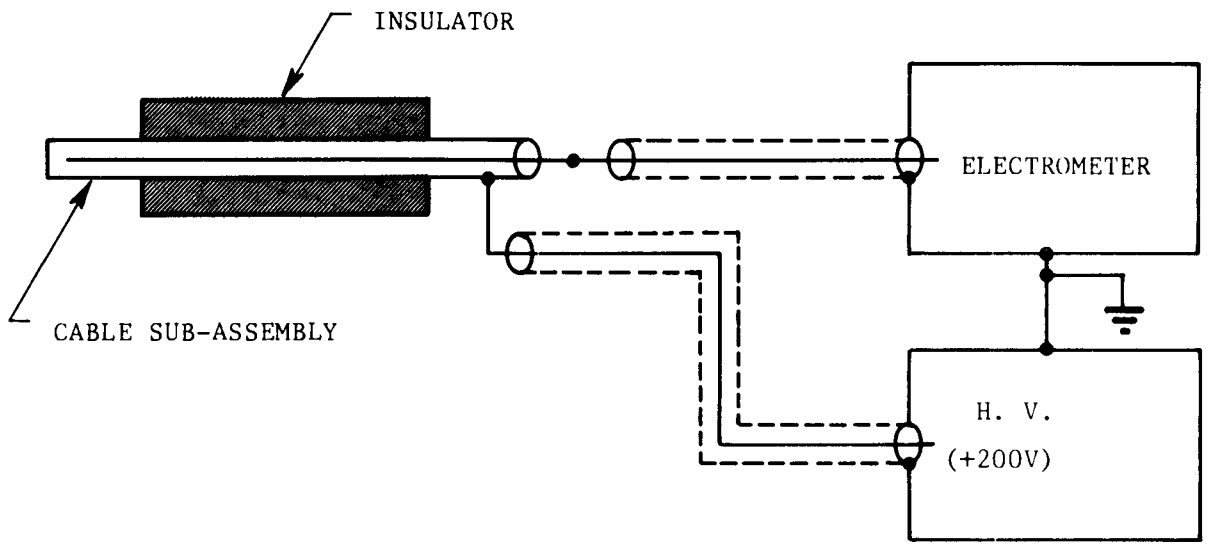

CAUTION: Care must be taken since the outside shell of the cable will be at high voltage potential for this test.

Fig. 6. Diagram for insulation resistance test of cable.

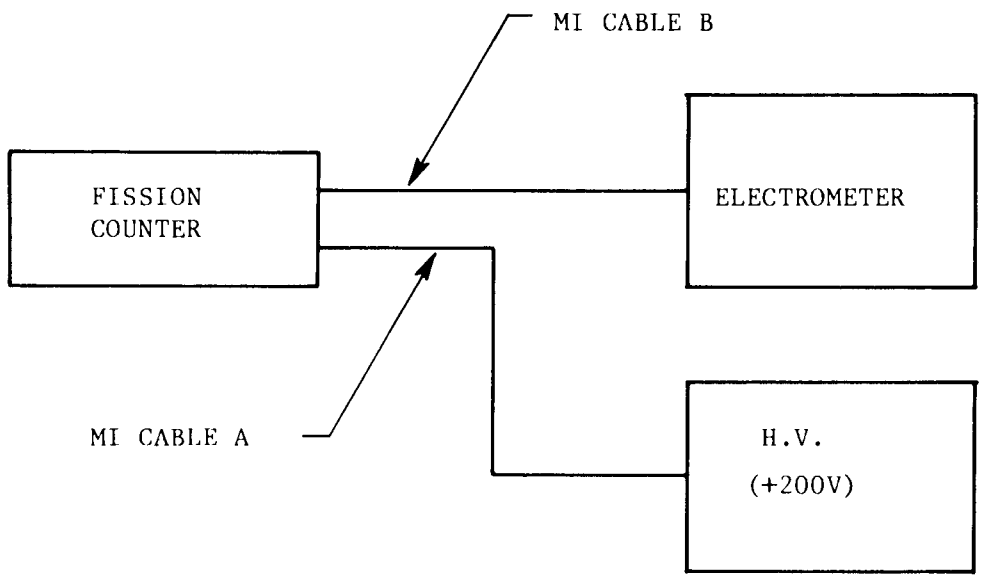

Fig. 7. Diagram for I_{DC} measurement of alpha and neutron currents.

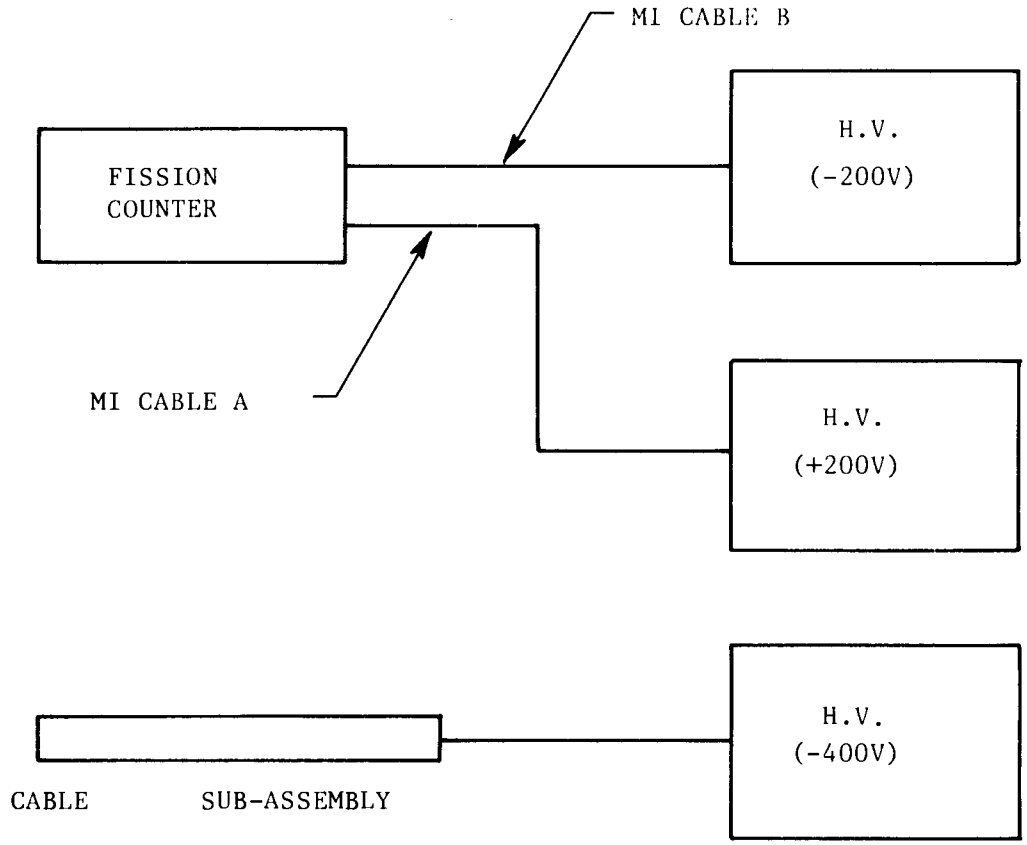

Fig. 8. Diagram to maintain high voltage on the fission counter or cable subassembly when no other electrical test is in progress.

5. FISSION COUNTER FC-3 ASSEMBLY PROCEDURE

The procedure for fabricating the ORNL Fission Counter FC-3 was as follows. Each step was completed before the next step was started. The work area was kept clean and dust-free.

1. Clean the 12 ceramic insulators (parts 17-4 and 18-4) with acetone and then with alcohol in an ultrasonic cleaner for 15 min in each solution.

2. Measure the insulation resistance of all insulators to ground after step 1 and all following steps are completed. Reclean any insulator which has a resistance $<10^{14}$ Ω. Store the clean insulators in a plastic bag until they are needed.

3. Vacuum bake all parts [except the electrodes (parts 14-4, 15-4, and 16-4), the insulators, and the evacuation tube (part 20-4)] in accordance with the "Vacuum-Bake Procedure," Sect. 8.

4. Electropolish all parts that were vacuum baked in step 3 according to the "Electropolishing Procedure," Sect. 9.

5. Heat treat the evacuation tube to achieve the desired softness needed for cold-weld crimping. Follow the "Heat Treatment Procedure," Sect. 7.

6. Clean all parts to be assembled (except the insulators) in acetone and then alcohol in an ultrasonic cleaner for 15 min in each solution. Store the parts in plastic bags until needed.

7. Weld part 20-4 into part 8-3 according to the "Welding Procedures," Sect. 11, "WP-1 Welding Parameters." Test the assembly according to the "Helium Leak Test Procedure," Sect. 6.

8. Weld parts (6-3 and 7-3) to form the outside can of the fission counter according to the "Welding Procedures," Sect. 11, "WP-1 Welding Parameters."

9. Test the can according to the "Helium Leak Test Procedure," Sect. 6.

10. Weld six insulator holding pins (part 19-4) into the plate (part 12-4) and six pins into the plate (part 13-4). (Caution: Be sure that the pins protrude on the proper side of the two plates.) The welds shall be made according to the "Welding Procedures," Sect. 11, "WP-3 Welding Parameters."

11. Weld the two pretested cable assemblies into part 8-3 according to the "Welding Procedures," Sect. 11, "WP-2 Welding Parameters." Test both welds according to the "Helium Leak Test Procedure," Sect. 6.

12. Measure the insulation resistance of both cables with 200 V applied to the cable. Clean the insulators with alcohol until the insulation resistance is $\geqslant 10^{14}\ \Omega$.

13. Slide part 13-4 fully onto part 10-3, and tack weld the parts together in two places according to the "Welding Procedures," Sect. 11, "WP-3 Welding Parameters."

14. Reclean parts 13-4 and 10-3 with acetone and then with alcohol to remove dust and fingerprints.

15. Spot weld a nickel wire (3.810 cm long by 0.038 cm diam) to each cylindrical electrode, on the outside surface of parts 14-4 and 15-4 and on the inside surface of part 16-4. The welds shall be made in accordance with the "Spot-Welding Procedures," Sect. 10.1, "SWP-1: Wire to Electrodes."

16. Screw the seven stainless steel alignment steps (part 33-2) onto the two electrode holding plates (parts 12-4 and 13-4).

17. Place six clean insulators on the insulator holding pins. Alternate the two types of insulators (parts 18-4 and 17-4).

18. Place the three electrodes on the stainless steel alignment steps. See drawing Q-5419-1 (Sect. A-A´) for proper orientation.

19. Adjust the positions of the three electrodes so that they are seated on the alignment steps.

20. Place six insulators on the pins of the top holding plate (part 12-4), alternating the insulator types (parts 17-4 and 18-4). Secure the six insulators with spring clamps.

21. Adjust the positions of the three electrodes so that they are seated on the stainless steel alignment steps.

22. Place six insulators on the pins of the top holding plate (part 12-4), alternating insulators 12 and 12A. Secure the six insulators with phosphor-bronze clamps.

23. Lower the assembly onto the center rod. Adjust the position of the three electrodes so that they are seated on the stainless steel alignment steps. The top holding plate is positioned correctly when the wires protrude through the center of the slots in the top holding plate.

24. Remove the spring clamps and the stainless steel alignment steps from part 13-4. Seat the electrodes on the bottom insulators.

25. Remove the other stainless steel alignment steps and seat the electrodes on the top insulators.

26. Place a clamp on the center rod so that part 12-4 and the rest of the assembly cannot move.

27. Place the assembly inside a grounded enclosure (Faraday cage) and make the following current measurements with 200 V:

Electrometer Connected To	High Voltage Connected To	Typical Currents (A)
Part 15-4	Parts 14-4 and 16-4	2×10^{-10}
Parts 14-4, 15-4, and 16-4	Frame	$\leqslant 5 \times 10^{-11}$

If the measured current values are significantly different from the typical values, disassemble and reclean the step insulators.

28. Be sure that all insulators and electrodes are seated.

29. Tack weld part 12-4 to part 10-3 in two places according to the "Welding Procedures," Sect. 11, "WP-3 Welding Parameters." Remove the clamp placed in step 26.

30. Slide the assembly into the outside can. Measure the capacitances as follows (typical values are shown):

    a. electrodes 14-4 and 16-4 to the outside can, with electrode 15-4 shorted to the capacitance bridge (140 pF);

    b. electrodes 14-4 and 16-4 to electrode 15-4, with the outside can shorted to the capacitance bridge (320 pF);

    c. electrode 15-4 to the outside can, with electrodes 14-4 and 16-4 shorted to the capacitance bridge (3 pF).

    Remove the assembly from the can.

31. Place the center rod of the electrode assembly into the hole in part 6-3. Align the pin holes in parts 8-3 and 10-3. Insert the retaining pin (part 11-3) into the hole and bend each end.

32. Wind the three nickel electrode wires two complete turns around their respective cable end-seals. Clip off the excess wire.

33. Label the cable connected to the center electrode (part 15-4) as "Cable A" and the other cable as "Cable B."

34. Slide the assembly into the outside can.

35. Measure the following capacitances (typical values are shown):

    a. Cable A to ground (1570 pF);
    b. Cable B to ground (1712 pF);
    c. between the center wires of both cables (320 pF).

36. Measure the alpha/leakage current at 200 V as follows (typical values are shown):

    a. Cable A to ground (5×10^{-10} A);
    b. Cable B to ground (5×10^{-10} A);
    c. the center wire of both cables in parallel to ground (3.5×10^{-11} A).

37. Using string or wire, secure the outside can onto the assembly and lower it into the laboratory neutron geometry.

38. Connect Cable A and Cable B to a power supply and to an electrometer, respectively. With no source and 200 V applied, the current should be $\sim 2 \times 10^{-10}$ A. Place the neutron source in the geometry and record the current.

39. Remove the outside can and spot weld the nickel wires to the cable end-seals according to the "Spot Welding Procedures," Sect. 10.2, "SWP-2: Wire to Cable Hot-End Seal."

40. Weld part 8-3 to the outside can according to the "Welding Procedure," Sect. 11, "WP-1 Welding Parameters."

41. Test the fission counter according to the "Helium Leak Test Procedure," Sect. 6.

42. Place the fission counter in a furnace and attach the evacuation tube to a vacuum system. With the counter at room temperature, reduce the pressure in the counter to $\leqslant 10^{-6}$ torr. When this vacuum is obtained, measure the insulation resistance as a function of temperature, using a low voltage megohmmeter ($\sim$8 V). Increase the temperature of the furnace to the next temperature in steps as indicated in the following table. Be sure to attain a vacuum of $\leqslant 10^{6}$ torr at each step before measuring the insulation resistance and proceeding to the next temperature. Typical values of insulation resistance are shown in the table.

Temperature		Vacuum	Insulation Resistance (Ω)	
(°C)	(°F)	(torr)	Cable A	Cable B
Room	Room	4.5×10^{-7}	$>10^{13}$	$>10^{13}$
110	230	2.5×10^{-7}	$>10^{13}$	$>10^{13}$
204	400	3.7×10^{-7}	$>10^{13}$	$>10^{13}$
288	550	8.6×10^{-7}	$>10^{13}$	$>10^{13}$
370	700	8.5×10^{-7}	$>10^{13}$	2×10^{12}
427	800	9.0×10^{-7}	$>10^{10}$	$>10^{10}$
480	900	4.8×10^{-7}	1.5×10^{10}	1.5×10^{10}

The purpose of this step is to eliminate contamination of the counting gas due to outgassing of the fission counter internals during operation at high temperatures. A Vac Ion pump and a sorption pump should be used to prevent carbon contamination due to backstreaming of pump oil. The total time at higher temperatures is ∿140 hr, of which ∿30 hr at 480°C is the minimum allowable.

43. Turn the furnace off and continue pumping until the counter is cool and the pressure is $\leqslant 4 \times 10^{-7}$ torr.

44. Fill the counter to 1900 ± 38 torr (2.50 ± 0.05 atm abs) with a mixture of 90% argon and 10% nitrogen (Sect. 2.10).

45. Cold-weld crimp and cut off the evacuation tube to the required length. Place the end of the tube under water and look for bubbles that would indicate leaks. If no bubbles are seen, weld the end of the evacuation tube.

6. HELIUM LEAK TEST PROCEDURE

The helium leak test procedure specified several times in the assembly procedures for the ORNL Fission Counter FC-3 was as follows:

1. Select the appropriate jigs, O-rings, or adaptors to connect the part to be tested to the vacuum system of the helium leak detector. In some cases special jigs must be constructed.

2. All parts to be tested must be cleaned with water, alcohol, or acetone prior to testing to remove foreign material, such as oil or cutting fluid.

3. The leak detector should have a minimum sensitivity of 10^{-10} std cm^3/sec. (A Consolidated Electrodynamics Corp., model 24-120 leak detector is used at ORNL.)

4. Connect the part to be tested to the vacuum system of the leak-detector and evacuate the part to the required pressure. Flood the exterior of the part with helium, using a jet (probe) to direct the gas onto joints, thin sections, etc.

5. There shall be no indication of helium leakage.

7. HEAT TREATMENT PROCEDURE

The evacuation tube, part 20-4 (drawing Q-5419 for the ORNL Fission Counter FC-3), connects the counter to the vacuum system and filling gases. A cold-weld crimp must be obtained so that there is no loss of gas pressure in the counter. (A crimping tool, from Utica Koldweld Tools, No. KL27-10, is used at ORNL.) For best results, the nickel tube should be soft. The heat treatment procedure was as follows:

1. Clean the tube with water, then acetone, and then alcohol.
2. Place the tube in an electric furnace with an inert cover gas.
3. Heat the tube for 0.5 to 5 min at 815-925°C (1500-1700°F).
4. Immediately quench the tube in water. (Caution: Embrittlement can occur if the tube is allowed to cool in air.)

8. VACUUM-BAKE PROCEDURE

Often, the operating life of fission counters is limited at high temperatures because the filling gas or the insulators become contaminated by materials outgassed from the internal metal parts of the counter while it is in operation at high temperature or is being tested under vacuum. This problem is eliminated by vacuum baking and then electropolishing all stainless steel parts prior to assembly.

The vacuum furnace is a tantalum can that is connected to an oil-diffusion vacuum pump with a water-cooled cold trap. The specified vacuum is attained before the furnace is turned on, and the vacuum is maintained until the furnace is cool. The parts are placed on a stainless steel plate during the vacuum-baking process. Typical information concerning the process is listed below:

Maximum temperature	760°C (1400°F)
Time required to reach temperature	45 min
Time at maximum temperature	2 hr
Time required for cooling	4 hr
Vacuum required	$\geqslant 2 \times 10^{-5}$ torr .

9. ELECTROPOLISHING PROCEDURE

The following electropolishing procedure (process No. QA-13-F) was used to process all stainless steel parts for the fission counter assembly as specified in the fabrication procedures.

9.1 Preparation and Cleaning

Before being electropolished, the parts were prepared and cleaned as follows:

1. Vapor degrease with perchlorethylene.
2. Rinse in cold water.
3. Clean cathodically in Metex, No. 308, 170 g/3.785 ℓ (6 oz/gal), at 70°C (160°F) (MacDermid Co.). Note: If a thick oxide layer or heat scales are present on the surface of the parts, they should be pickled in concentrated HCl with Hyacin and in 80°C (180°F) H_2SO_4 baths.
4. Rinse in cold water.
5. Acid dip in Metex, No. 629, 454 g/ℓ (16 oz/gal), at room temperature (MacDermid Co.).
6. Rinse in cold water.

9.2 Electropolishing

1. Electropolish in a mixture of 3 parts by volume of phosphoric acid, 85% grade, and 1 part by volume of Electro-Glo 300 (Electro-Glo Co.).
2. The conditions for electropolishing are:

Current density	0.108 A/cm^2 (100 A/ft^2)
Voltage	7-9 V
Cathodes	300 series stainless steel
Temperature	70°C
Time	5-10 min
Agitation	None.

9.3 Posttreatment

After the parts had been electropolished, the treatment was finished as follows:

1. Rinse in cold water.
2. Acid dip as in step 5 of Sect. 9.1.
3. Rinse in cold water.
4. Rinse in warm water at 50°C (120°F).
5. Dry in air at room temperature.

10. SPOT-WELDING PROCEDURES

All spot-welds specified in the "MI Cable Assembly Procedures" (Sect. 3) and the "Fission Counter FC-3 Assembly Procedure" (Sect. 5) were made according to one of the parameters described in Sects. 10.1-10.3. These parameters are the result of repeated tests of various procedures and techniques, with the objective of making reproducible, high-quality welds. A Hughes Aircraft Co., spot welding machine, VTW-30B, was used.

10.1 SWP-1: Wire to Electrode

After the nickel wire was bent into the shape shown in Fig. 9, it was washed in acetone and then spot welded. Two spot welds were made, using 15 Wsec.

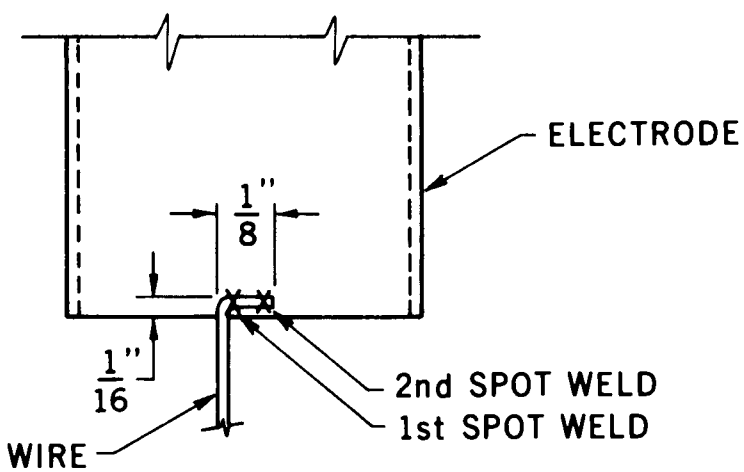

Fig. 9. Spot-welding configuration for SWP-1.

10.2 SWP-2: Wire to Cable Hot-End Seal

The nickel wire was welded to the center pin of the cable hot-end seal by five spot welds, each at a different welder setting (in order): 5, 10, 20, 30, and 40 Wsec. The welder electrodes were placed across the wire turns and not moved until all five welds were made.

10.3 SWP-3: Wire to Cable Cold-End Seal

The center wire of the MI cable was welded to the center pin of the cold-end connector by two spot welds, each at 10 Wsec. Figure 10 shows the welding configuration.

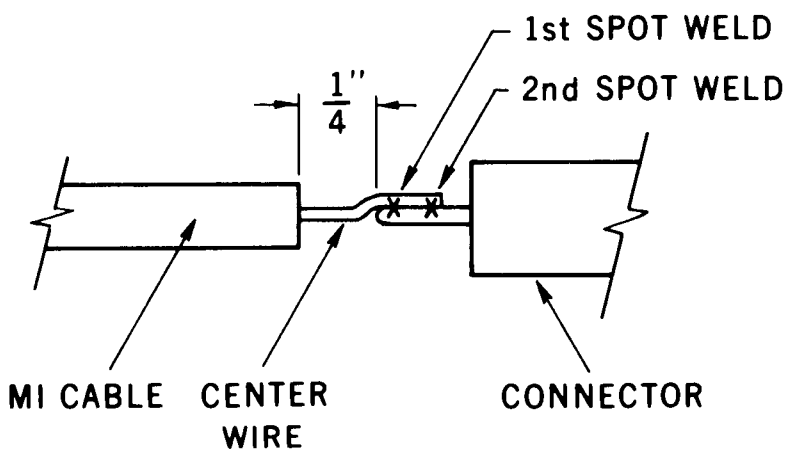

Fig. 10. Spot-welding configuration for SWP-3.

11. WELDING PROCEDURES

Most welds specified in the MI Cable Assembly Procedure and in the Fission Counter FC-3 Assembly Procedure were made according to one of the welding parameters WP-1, -2, and -4 to WP-7 described in Sects. 11.1-11.7. These parameters were developed by testing various techniques and conditions to achieve reproducible, high-quality welds. A Flexion Auto TIG welding machine, model 100-5, by the Hughes Aircraft Co. was used to make all welds in accordance with these welding parameters. (Note: WP-3 was not applicable.)

All other welds were made in accordance with ORNL-WPS-307 Welding Procedures by a certified welder. In some cases, filler metal was used to make these welds. These variations were as follows, and they are specified in the "Fission Counter FC-3 Assembly Procedure" (Sect. 5): variation 1, Inconel 82-T filler metal; variation 2, SS-308L filler metal; and variation 3, no filler metal.

After <u>every</u> weld was completed, the unit was checked according to the "Helium Leak Test Procedure" (Sect. 6).

11.1 WP-1 Welding Parameters

Slope up	2	Motor speed	20
Slope down	3	Current range	high
H.F. intensity	7	Current set	50 A
Gas	argon	Electrode diam	1.59 mm (0.063 in.)
Gas timer	20	Electrode taper	20°
Gas flow	9.4 l/sec (20 cfm)	Torch cup No.	5

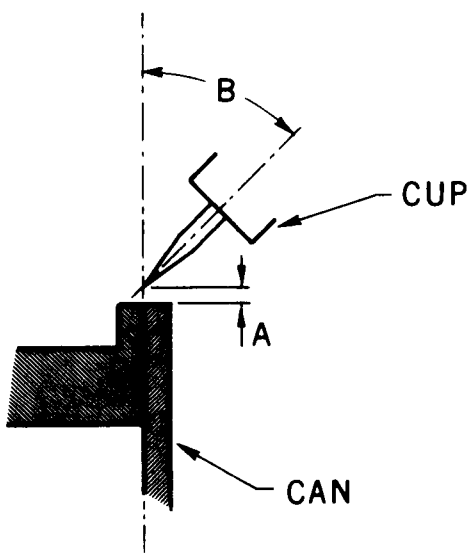

A: 40 mm (1.575 in.)

B: 0° to 45°

Fig. 11. Welding configuration for WP-1.

11.2 WP-2 Welding Parameters

Slope up	2.5	Motor speed	none
Slope down	0	Current range	low
H.F. intensity	7	Current set	2 A
Gas	argon	Electrode diam	0.508 mm (0.020 in.)
Gas timer	20	Electrode taper	20°
Gas flow	3.8 l/sec (8 cfm)	Torch cup No.	4

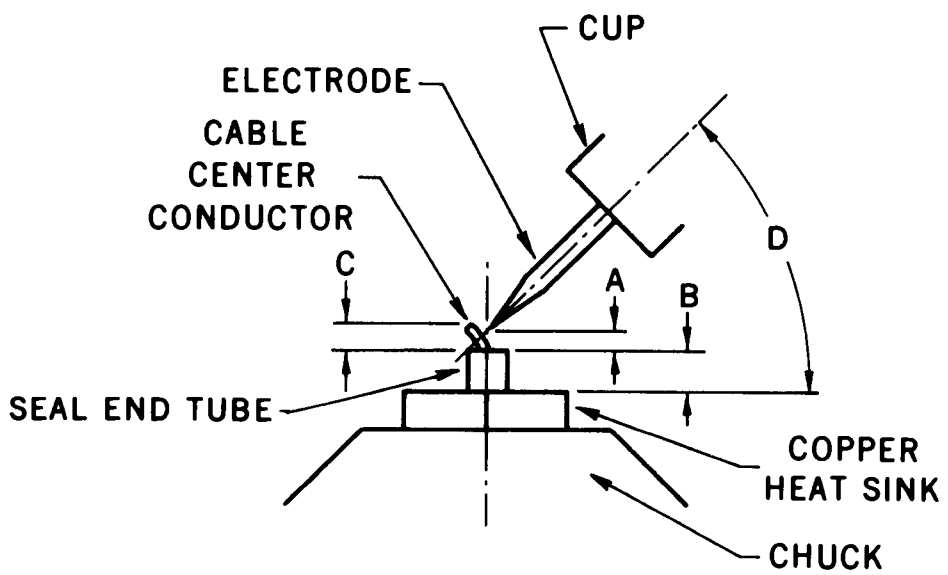

A: 0.254 mm (0.010 in.)

B: 1.19 mm (0.05 in.)

C: 0.792 mm (0.031 in.)

D: 45°

Fig. 12. Welding configuration for WP-2.

11.3 WP-4 Welding Parameters

Slope up	5	Motor speed	40
Slope down	5	Current range	low
H.F. intensity	7	Current set	8 A
Gas	argon	Electrode diam	1.59 mm (0.063 in.)
Gas timer	20	Electrode taper	20°
Gas flow	9.4 l/sec	Torch cup No.	5

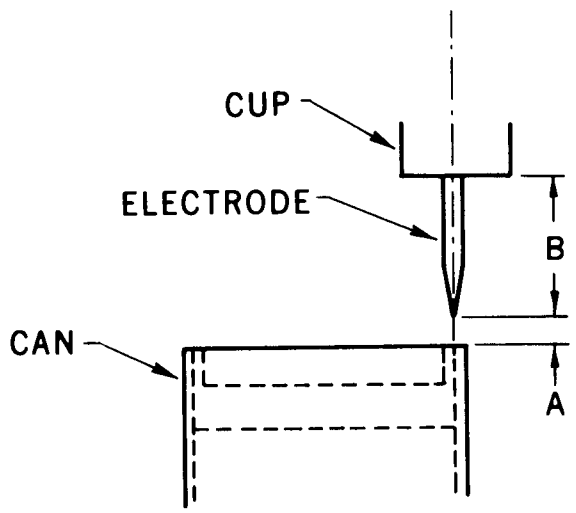

A: 0.203 mm (0.008 in.)

B: 6.35 mm (0.250 in.)

Fig. 13. Welding configuration for WP-4.

11.4 WP-5 Welding Parameters

Slope up	5	Motor speed	40
Slope down	5	Current range	high
H.F. intensity	7	Current set	22 A
Gas	argon	Electrode diam	1.59 mm (0.063 in.)
Gas timer	20	Electrode taper	20°
Gas flow	9.4 l/sec	Torch cup No.	5

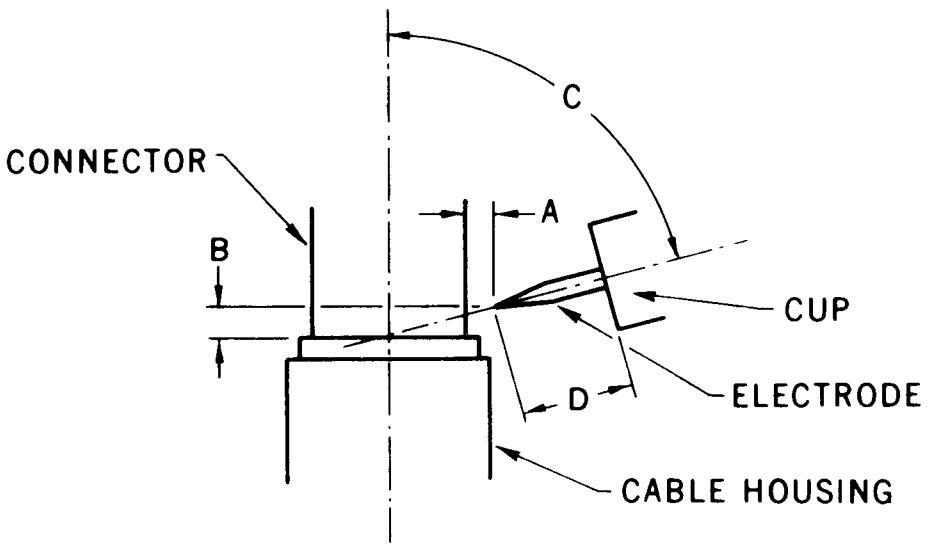

A: 0.254 mm (0.010 in.)

B: 0.40 mm (0.016 in.)

C: 70°

D: 6.35 mm (0.250 in.)

Fig. 14. Welding configuration for WP-5.

11.5 WP-6 Welding Parameters

Slope up	5	Motor speed	68
Slope down	5	Current range	low
H.F. intensity	7	Current set	8 A
Gas	argon	Electrode diam	1.59 mm (0.063 in.)
Gas timer	20	Electrode taper	20°
Gas flow	9.4 l/sec	Torch cup No.	5

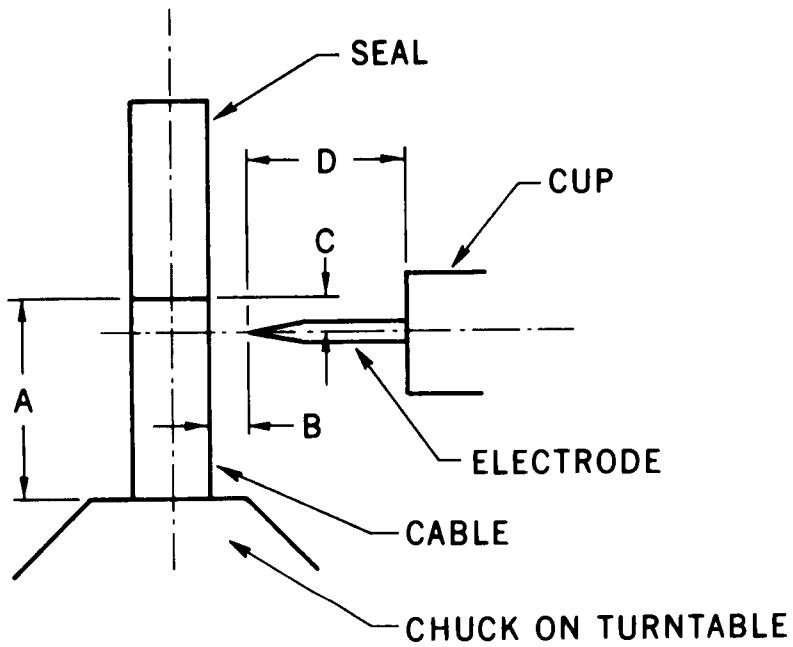

A: 11.1 mm (0.44 in.)

B: 0.203 mm (0.008 in.)

C: 0.127 mm (0.005 in.)

D: 6.35 mm (0.250 in.)

Fig. 15. Welding configuration for WP-6.

11.6 WP-7 Welding Parameters

Slope up	5	Motor speed	25
Slope down	2.5	Current range	high
H.F. intensity	7	Current set	11 A
Gas	argon	Electrode diam	1.59 mm (0.063 in.)
Gas timer	20	Electrode taper	20°
Gas flow	9.4 l/sec	Torch cup No.	4

Note: Make a tack-weld with the current set at 6 A before starting the above weld.

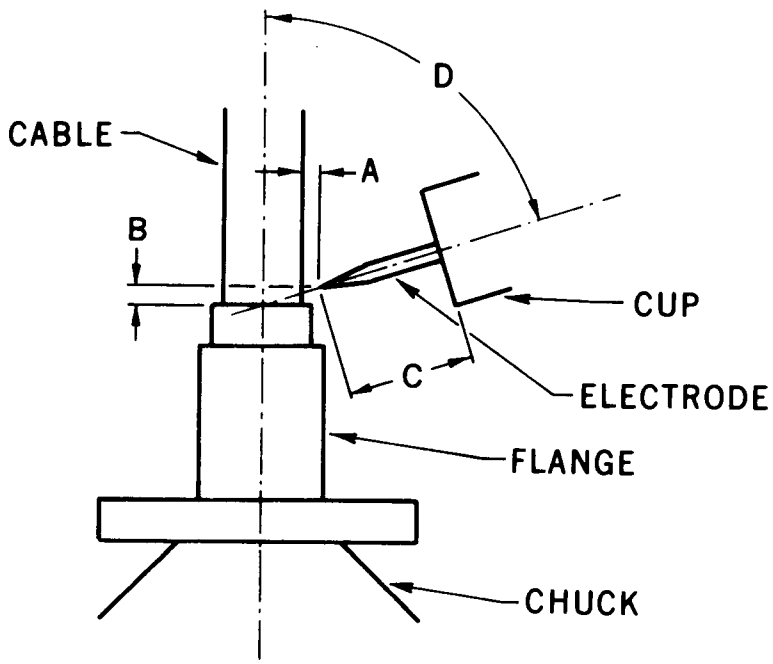

A: 0.279 mm (0.011 in.)

B: 0.279 mm

C: 6.35 mm (0.250 in.)

D: 45°

Fig. 16. Welding configuration for WP-7.

12. ELECTRONIC CALIBRATION

In all tests of fission counters at ORNL, the gain of the channel is calibrated at suitable intervals. The calibration factor is a ratio of the dial reading on the integral discriminator to the pulse height in arbitrary units (called "PHS").

The FC-3 was calibrated by driving the preamplifier input, through a matching network and an attenuator, by pulses at a rate of 60 Hz from a mercury relay pulser.[2] These pulses were passed through a network that eliminated "ringing." The pulse rise time was ∿10 nsec, and the decay time was ∿6 msec. A typical current-pulse channel had equal integrating and differentiating filter time constants from 7 to 200 nsec. Because of the approximate step-function nature of the input test pulse signal, the amplitude of the pulses at output of the filter was nearly independent of the filter time constant. For this reason the calibration factor obtained was also nearly independent of the filter time constant. Thus, this represented a standardization of the gain of the channel at the center frequency of the passband established by the integrating and differentiating networks.

The conversion factor for current is fundamentally more significant in current-pulse systems, and it must be maintained constant when calibration procedures are prepared for other system configurations of impedances. For instance, a differential preamplifier used with a guarded, two-cable fission counter will accept and add two current pulses for each event in the counter. Thus, a 1.382-μA (PHS = 36.11) current pulse in the counter would generate a 69.1-μV pulse (of opposite polarity) at each 50-Ω input of the differential preamplifier. Since available calibration equipment would not simultaneously provide two equal pulses of opposite polarity, the differential system was calibrated at PHS = 36.11 by applying pulses of 138.2 μV (2 × 69.1 μV) height to one input of the preamplifier and grounding the other input. To attain the best possible precision, the calibration was repeated with pulses of the same height, and opposite polarity was applied to the other input. The results were averaged.

Although this procedure standardized the passband gain of the channel, the effective gain factor of the system driven by a fission counter (ratio of PHS units to actual input pulse height) depended on the shape of the pulses from the counter. In general, the gain factor differed from the value of 36.11/69.1 = 0.5225 PHS/μV defined for the calibrating pulses. Furthermore, it varied, for a given pulse shape, with the integrating/differentiating time constant used. Thus, for example, fission counter pulses that attained a PHS value of 10 had a height somewhat different from 19.14 μV. Since the output amplitude of the mercury relay pulser was stable (within 0.005%/hr), the gain calibration was reproducible.

This procedure employed arbitrary numerical parameters that had been derived, for historical consistency, from other parameters used in earlier, somewhat different procedures based on variation of the amplifier gain rather than on variation of the discriminator level. The attenuator was set so that the height of the pulses delivered to a single-ended 50-Ω preamplifier input was 69.1 μV. The discriminator dial was then adjusted to the half-triggering point (i.e., the discriminator output frequency was 30 Hz av).

The basis of this technique of using one-half the pulse generator recurrence frequency to determine a threshold level is that the input noise to the fission counter channel modulates the amplitude of any test pulse and creates a Gaussian amplitude distribution. This distribution, viewed with an integral-type discriminator, produces output pulses at the recurrence frequency of the pulse generator at low values of discriminator level. At higher values of discriminator level, the rate of output pulses reduces to zero. The level at which one-half the recurrence frequency will be observed is the maximum point of the amplitude distribution; this is the level of maximum sensitivity, i.e., the frequency change is greatest for a given change of the discriminator threshold level. This level is the most desirable point at which to detect channel gain shifts. The discriminator setting, D_o, obtained by this procedure represents a PHS value of 36.11. Thus, the conversion factor from discriminator dial reading to PHS is $36.11/D_o$. The conversion factors for the absolute input pulse height is 69.1/36.11 = 1.914 μV/PHS unit or, in a 50-Ω system, 38.28 nA/PHS unit.

13. COMPARISON OF INTEGRAL PULSE HEIGHT DISTRIBUTION CURVES

Integral pulse height distributions are useful for evaluating and comparing fission counters and for selecting the discriminator setting at which a counter should be operated. Normally, these distributions are plotted with the count rate on a logarithmic scale and the pulse height on a linear scale. (The plotted pulse height values are often discriminator dial settings.)

This method of plotting leads to three types of ambiguity when different pulse height distributions are compared:

1. The gain of a given fission counting channel may drift, may be reset manually, or may be altered by equipment substitution. If the magnitude of the gain change is not determined, it will not be possible to compare pulse heights obtained in subsequent tests with those measured in previous tests.

2. No valid comparison can be made of the performances of the same fission counter driving two entirely different channels if the ratios of gains to discriminator settings are not determined. Also, if a fission counter is to be operated with a different channel, it may not be clear which discriminator setting should be used in the new channel.

3. To study the ratio of pulse heights due to different processes in the detection system (e.g., the experimenter may vary parameters so as to optimize the ratios of pulse heights due to neutrons to those due to gamma pileup or electronic noise), a logarithmic pulse height scale would be more suitable than a linear scale.

The Controls Department of the Instrumentation and Controls Division of ORNL calibrates the gain of all counting channels at suitable intervals by the method described in Sect. 12. Values of pulse height are always plotted in terms of arbitrary, but reproducible PHS units. This procedure effectively resolves the first two of the preceding ambiguities.

The third ambiguity remains, however. Furthermore, the second ambiguity reappears when one attempts to compare results with or to translate

discriminator settings to another installation where similar gain calibrations are not made. These uncertainties can be largely removed by plotting integral pulse height distributions on a logarithmic pulse height scale. Then, if two distributions are plotted on the same log-log graph scales, they can be compared--and any differences in channel gain and/or pulse height units can be resolved--by displacing one plot with respect to the other in the direction of the pulse height scale. Similarly, any differences in neutron flux can be resolved by displacement along the direction of the count rate scale.

An example was the determination of a discriminator setting for testing the ORNL FC-3 fission counter in the EBR-II. Tests at ORNL showed the proper setting to be 15.0 PHS units; at this setting the count rate due to gamma pileup was 1.0 count/sec at 1×10^6 R/hr. This setting is marked on Fig. 8 in Vol. 1 (ref. 1), which is a preliminary plot on logarithmic scales of the neutron integral pulse height distribution of the FC-3 fission counter. The procedure for determining the discriminator setting for tests in the EBR-II was:

1. A neutron integral pulse height distribution was obtained, using the counting channel and gain settings intended for the tests in the EBR-II.

2. This EBR-II distribution was plotted on the same scales as Fig. 8 in Vol. 1 (ref. 1).

3. The new graph was superimposed on Fig. 7 in Vol. 1, and it was displaced along both axes until the <u>neutron</u> integral pulse height distributions coincided. (Note: If the two distributions were taken at different equivalent thermal neutron fluxes and/or with different preamplifiers, the electronic noise portions of the distributions will not coincide.)

4. The correct EBR-II discriminator setting was the pulse height on the EBR-II distribution that corresponded to the 15.0 PHS-unit mark on the ORNL distribution.

A possible inconvenience of this method is that the graph is difficult to use unless the decades on the pulse height scale are much

longer than those on the count rate scale. Since graph paper of this type was not available, graphs were generated by a computer-driven plotter.

14. FISSION COUNTER TEMPERATURE TESTING PROCEDURE

The fission counter assembly was tested at temperatures up to 450°C for several days so that its performance and operating life under the stress of heat could be determined. The block diagram of the electrical connections for this test is contained in Sect. 4, and the temperature testing schedule is shown in Fig. 17.

The testing procedure was as follows:

1. Place the fission counter in the laboratory geometry. With the 27-nsec filter in place, and the voltage evenly divided (+200 and -200 V) between the two cables, record data to plot the following two pulse height distribution curves: (a) with the neutron source, and (b) without the source (noise test).

2. Place the fission counter in the furnace, with the furnace neutron geometry in place. With the same filter and voltages as in step 1, record data to plot the two pulse height distribution curves under the conditions of steps 1a and b.

3. Record neutron counting rate data and voltage breakdown data at two different PHS settings, at room temperature, and with voltage divided (+200 and -200 V) between the two cables. Record the counts for five 10-sec periods at each of the two following PHS settings: (a) to give ∿1.0 count/10 sec of noise (data shall be taken with and without the neutron source), and (b) to give ∿100 counts/10 sec of noise (data shall be taken only without the neutron source). These two PHS settings shall be used during the remainder of the test.

4. Repeat step 3 with +250 and -250 V and then +300 and -300 V evenly divided between the cables. Decrease the voltage to +200 and -200 V until the next testing period. <u>If there is any indication of voltage breakdown, turn the voltage off</u>.

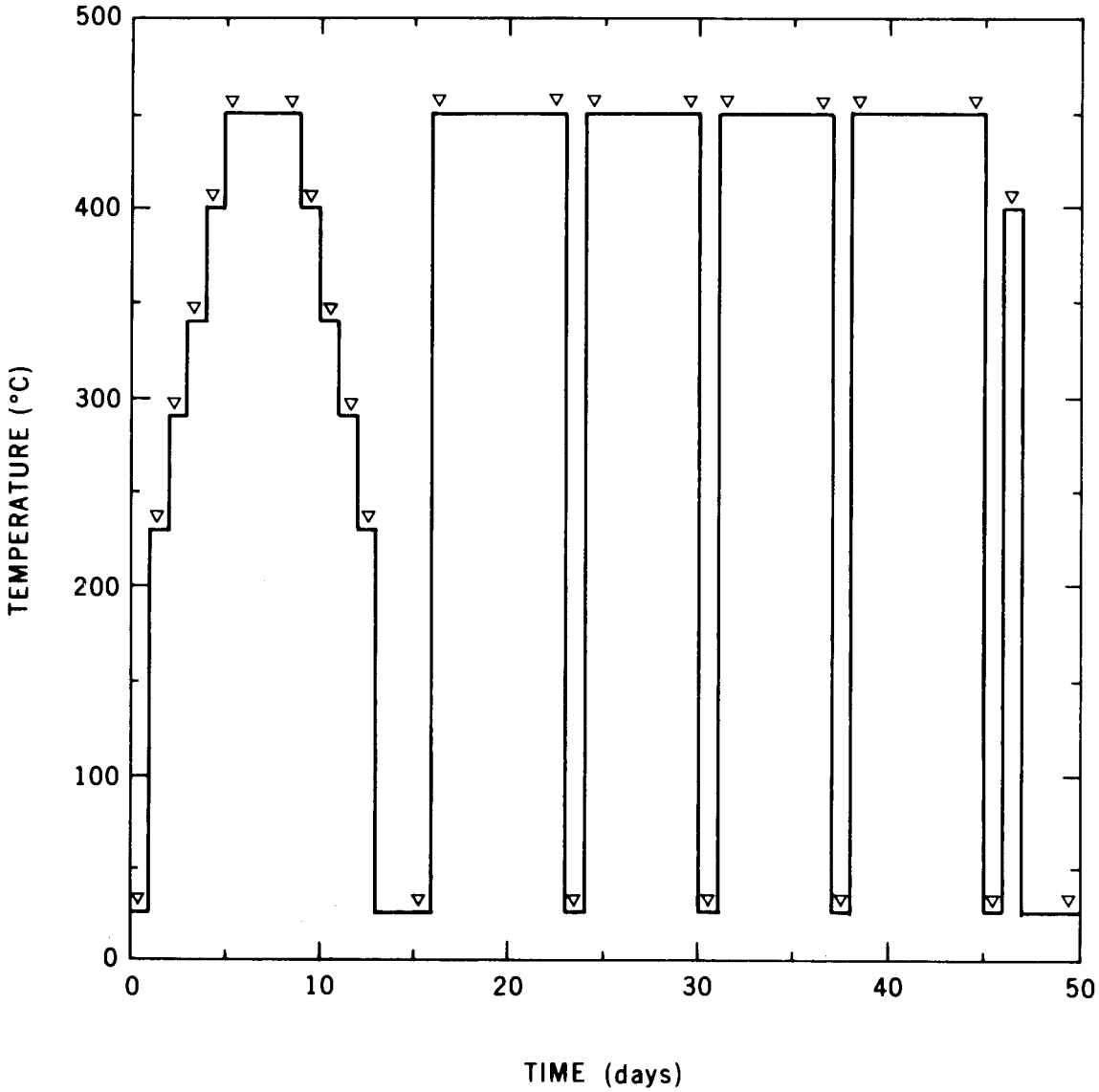

Fig. 17. Temperature testing schedule for fission counter.

5. Measure the insulation resistance of each cable with 200 V applied. (This is to be done only on days marked ∇ on Fig. 17.)

6. Turn on the furnace, and set the controller at 230°C. Record data as described in steps 3, 4, and 5.

7. Change the temperature as shown in Fig. 17. Record data as described in steps 3 and 4 every day, and in step 5 as indicated.

8. Increase the temperature before leaving work at the end of a day. Record the data in the morning or afternoon while the ac line noise level is low.

9. From Fig. 17, the following observations can be made:

   By slowly raising and lowering the temperature at the start of the test and recording data, the insulation resistance vs temperature can be plotted.

   The counter will be cycled four times from room temperature to the test temperature (450°C) and back to room temperature.

   A one-day cycle to the operating temperature 400°C is performed as a final test.

   The fission counter will be at the test temperature 450°C for a total of 30 days. The test temperature is 38°C (100°F) higher than the anticipated operating temperature.

10. Repeat steps 3, 4, 5, and 1, all at room temperature. There shall be no measurable difference between these data taken after the temperature test and the data recorded before the test.

15. REFERENCES

1. W. T. Clay et al., *ORNL Fission Counter FC-3 Quality Assurance Report, Vol. 1: Fission Counter Development*, ORNL/TM-5725 (1977).

2. E. Fairstein, *Instruction Manual for Mercury Relay Pulse Generator Model Q-1212C*, ORNL CF 60-9-67 (September 1960).

ORNL/TM-5726
(Vol. 2 of ORNL/TM-5725)
Dist. Category
UC-79 and -79m

INTERNAL DISTRIBUTION

1. R. K. Abele
2. C. J. Borkowski
3-7. R. S. Booth
8. R. S. Burns
9. M. M. Chiles
10-14. W. T. Clay
15. M. W. Davis
16-20. J. T. De Lorenzo
21-25. G. C. Guerrant
26. W. O. Harms
27. J. D. Jenkins
28. R. C. Kryter
29. C. S. Lisser
30. F. W. Manning
31. M. V. Mathis
32. J. T. Mihalczo
33. F. H. Neill
34. L. C. Oakes
35-39. V. K. Paré
40. G. L. Ragan
41. C. W. Ricker
42. G. S. Sadowski
43. C. M. Smith
44. D. B. Trauger
45. K. H. Valentine
46-47. Central Research Library
48. Document Reference Section
49-51. Laboratory Records Department
52. Laboratory Records, ORNL R.C.
53. ORNL Patent Office

EXTERNAL DISTRIBUTION

54-55. Director, Division of Reactor Development and Demonstration, Energy Research and Development Administration, Washington, D.C. 20545

56. Director, Reactor Division, Oak Ridge Operations Office, P. O. Box E, Oak Ridge, Tennessee 37830

57. Research and Technical Support Division, ERDA, ORO

58-309. Given distribution as shown in TID-4500 for categories UC-79 and -79m (25 copies - NTIS)