LOCKHEED MARTIN ENERGY RESEARCH LIBRARIES

3 4456 0509622 2

ORNL/TM-5410
(Appendix II of ORNL/TM-5242)

Cy. 131

Assessment of Very High-Temperature Reactors in Process Applications

Appendix II — VHTR Process Heat Application Studies

J. E. Jones
W. R. Gambill
R. H. Cooper
E. C. Fox
L. C. Fuller
C. C. Littlefield
M. D. Silverman

OAK RIDGE NATIONAL LABORATORY
CENTRAL RESEARCH LIBRARY
DOCUMENT COLLECTION
LIBRARY LOAN COPY
DO NOT TRANSFER TO ANOTHER PERSON
If you wish someone else to see this document, send in name with document and the library will arrange a loan.

UCN-7969
(3-67)

OAK RIDGE NATIONAL LABORATORY
OPERATED BY UNION CARBIDE CORPORATION FOR THE ENERGY RESEARCH AND DEVELOPMENT ADMINISTRATION

Printed in the United States of America. Available from
National Technical Information Service
U.S. Department of Commerce
5285 Port Royal Road, Springfield, Virginia 22161
Price: Printed Copy $5.50; Microfiche $3.00

This report was prepared as an account of work sponsored by the United States Government. Neither the United States nor the Energy Research and Development Administration/United States Nuclear Regulatory Commission, nor any of their employees, nor any of their contractors, subcontractors, or their employees, makes any warranty, express or implied, or assumes any legal liability or responsibility for the accuracy, completeness or usefulness of any information, apparatus, product or process disclosed, or represents that its use would not infringe privately owned rights.

ORNL/TM-5410
(Appendix II of ORNL/TM-5242)

Contract No. W-7405-eng-26

ENGINEERING TECHNOLOGY DIVISION

ASSESSMENT OF VERY HIGH-TEMPERATURE REACTORS IN PROCESS APPLICATIONS

APPENDIX II — VHTR PROCESS HEAT APPLICATION STUDIES

J. E. Jones
W. R. Gambill
R. H. Cooper
E. C. Fox
L. C. Fuller
C. C. Littlefield
M. D. Silverman

Date Published: June 1977

Prepared by the

OAK RIDGE NATIONAL LABORATORY
Oak Ridge, Tennessee 37830
operated by
UNION CARBIDE CORPORATION
for the
ENERGY RESEARCH AND DEVELOPMENT ADMINISTRATION

LOCKHEED MARTIN ENERGY RESEARCH LIBRARIES

3 4456 0509622 2

The complete report is composed of the following:

ORNL/TM-5242 — Assessment of Very High-Temperature Reactors in Process Applications

ORNL/TM-5409 — Evaluation of the Reactor System
(Appendix I)

ORNL/TM-5410 — Very High-Temperature Reactor Process Heat
(Appendix II) Application Studies

ORNL/TM-5411 — Engineering Evaluation of Process Heat Applications
(Appendix III) for Very High-Temperature Reactors

CONTENTS

Page

FOREWORD v

ABSTRACT vii

INTRODUCTION ix

1. PROCESS HEAT APPLICATIONS 1
   1.1 Summary 1
      1.1.1 Coal conversion 1
      1.1.2 Nuclear steelmaking 1
      1.1.3 Petroleum refinery 1
      1.1.4 Oil shale and tar sands 2
   1.2 Coal Conversion 2
      1.2.1 Discussion of rationale for developing nuclear process heat for coal conversion 2
      1.2.2 Evaluation of a coal liquefaction process using either a nuclear- or a fossil-heat source for reforming 3
      1.2.3 Conceptual design of a coal-steam gasification process heated by a gas-cooled reactor 11
      1.2.4 Hydrogen from water splitting — electrolytic and thermochemical — and its application to fuel synthesis 24
      1.2.5 Advantages and disadvantages of nuclear coal conversion 32
      1.2.6 Conclusions and recommendations for nuclear coal conversion 34
   1.3 Nuclear Steelmaking 35
   1.4 Petroleum Refinery 37
   1.5 Oil Shale and Tar Sands 49

2. ENERGY STORAGE, TRANSPORT, AND PEAKING POWER APPLICATIONS 57
   2.1 Summary 57
      2.1.1 Introduction 57
      2.1.2 Potential market 57
      2.1.3 Conclusions 58
   2.2 EVA-ADAM 62
      2.2.1 Results 68
      2.2.2 Detailed system description 71
   2.3 Heat Transfer Salt 77
      2.3.1 Heat source 78
      2.3.2 Salt 78
      2.3.3 System description 79
      2.3.4 Economic analysis 79

Page

3. MATERIALS REQUIREMENTS FOR PROCESS HEAT EXCHANGERS 85
3.1 Steam Reforming 85
3.2 Steam-Coal Gasification 86
3.3 High-Temperature Load-Carrying Capabilities 87
3.4 Materials Compatibility 89
3.5 Thermochemical Hydrogen Production 91
3.6 Summary 97

REFERENCES 99

FOREWORD

This is one of a series of reports on nuclear process heat. The overall summary is *Assessment of Very High-Temperature Reactors in Process Applications* (ORNL/TM-5242). Details and background information are presented in Appendix I — *Evaluation of the Reactor System* (ORNL/TM-5409); Appendix II — *VHTR Process Application Studies* (ORNL/TM-5410); and Appendix III — *Engineering Evaluation of Process Heat Applications for VHTRs* (ORNL/TM-5411).

ABSTRACT

A critical review is presented of the technology and economics for coupling a very high-temperature gas-cooled reactor to a variety of process applications. It is concluded that nuclear steam reforming of light hydrocarbons for coal conversion could be a near-term alternative and that direct nuclear coal gasification could be a future consideration. Thermochemical water splitting appears to be more costly and its availability farther in the future than the coal-conversion systems. Nuclear steelmaking is competitive with the direct reduction of iron ore from conventional coal-conversion processes but not competitive with the reforming of natural gas at present gas prices. Nuclear process heat for petroleum refining, even with the necessary backup systems, is competitive with fossil energy sources. The processing with nuclear heat of oil shale and tar sands is of marginal economic importance.

An analysis of peaking power applications using nuclear heat was also made. It is concluded that steam reforming methane for energy storage and production of peaking power is not a viable economic alternative, but that energy storage with a high-temperature heat transfer salt (HTS) is competitive with conventional peaking systems. An examination of the materials required in process heat exchangers is made.

INTRODUCTION

In April 1974, the Energy Research and Development Administration (ERDA) authorized General Atomic Company, General Electric Company, and Westinghouse Astronuclear Laboratory to assess the available technology for producing process heat utilizing very high-temperature nuclear reactors (VHTRs).[1-3] The final reports of this work were submitted in December 1974.

Oak Ridge National Laboratory (ORNL) was assigned a lead role in evaluating the vendor VHTR studies and assessing the application of VHTRs in a number of specific high temperature processes and in intermediate and peaking power generation.

This is an Appendix of a summary report entitled *Assessment of Very High-Temperature Reactors in Process Applications* (ORNL/TM-5242). The other two appendices are *Evaluation of the Reactor System* — Appendix I (ORNL/TM-5409) and *Engineering Evaluation of Process Heat Applications for Very High-Temperature Nuclear Reactors* — Appendix III (ORNL/TM-5411).

This Appendix includes the discussion of process heat applications and peaking power applications. Each section is organized to present a discussion of the merits of the specific applications.

1. PROCESS HEAT APPLICATIONS

1.1 Summary

A very wide range of process heat applications has been considered. Because of the diversity of process heat applications, it is not practical to present direct comparisons of the alternatives considered. All applications appear to be technically achievable with development of the VHTR.

1.1.1 Coal conversion

The major long-term process heat application of the VHTR is in synthetic fuels via coal conversion. As many as 132 3000-MW(t) VHTRs could be used in synthetic fuel production by the year 2030.[4] However, this application could not have a significant impact until after the year 2000.

The most reasonable near-term use of the VHTR in coal conversion is its application in the steam reforming of light hydrocarbons. In the modified Hydrocarbon Research H-Coal process to produce crude liquids, the nuclear reformer application is economically competitive with the all-fossil plant and produces less environmental pollution. Direct coal gasification using nuclear heat is a promising nuclear coal-conversion application for the long term. This generally requires higher-temperature or catalyzed coal. Use of the VHTR to produce hydrogen for coal conversion via thermochemical or electrolytic water splitting is not economically competitive with hydrogen via coal gasification.

1.1.2 Nuclear steelmaking

Steelmaking via direct reduction using synthesis gas from a nuclear-heated reformer appears to be competitive with the conventional coke-oven-blast-furnace process and with the direct reduction process using synthesis gas from a Koppers-Totzek gasifier. It is not competitive with synthesis gas from a conventional natural-gas reformer, when considering present natural gas costs.

Because of size mismatch the steel industry does not appear to represent a major market for the VHTR in number of units, but that market may be a very important one. The Japanese have launched a major program in nuclear steelmaking, allocating about $26 million over a six-year period. Nuclear steelmaking technology may be required to keep the U.S. steel industry competitive in the future.

1.1.3 Petroleum refinery

The high-temperature gas-cooled reactor (HTGR) (or low-range VHTR) has been evaluated as a source of high-temperature process heat and steam for petroleum refining. Although the heat transfer system was

made more complex (and expensive) by the necessity for a backup heat source to assure very high availability, heat can be delivered to the refinery for \$1.91 to \$3.92 per 10^6 Btu. This appears to be in a competitive range with most fossil fuels for delivered energy cost.

1.1.4 Oil shale and tar sands

The relative cost of oil shale recovery using the VHTR appears to be marginally competitive with conventional alternatives. Potential benefits of the VHTR application are the 24% to 50% greater yield from the oil shale resource and the approximately 20% lower water requirement.

The market potential for the VHTR in shale oil recovery and processing is not projected to be significant at present. The market potential in tar sands recovery in the United States is nil, but potential applications in Canada, Venezuela, and Colombia could provide an export market.

1.2 Coal Conversion

1.2.1 Discussion of rationale for developing nuclear process heat for coal conversion

Nuclear conversion of coal to synthetic pipeline gas, synthesis gas, and liquid fuels is an option that will not be realized until the twenty-first century because the necessary reactor technology will not, in all probability, be demonstrated before 1995. However, the application of nuclear power to coal conversion could be of great importance. In the next century, possible limitations in the availability of fossil fuels could cause coal to be restricted to feedstock for synthetics dedicated to transportation, chemicals, and consumer fuels. With the expected commercialization of a breeder reactor, which would provide nuclear resources in excess of our projected coal resources, the development of nuclear power for the conversion of coal could become an attractive and economic option.

For the conversion of coal to synthetic fuels, there are four processes that are amenable to the application of nuclear process heat:

1. Hydrogasification of coal. (This type of process has been studied and developed extensively in West Germany.[5])

2. Solution hydrocracking of coal. (General Atomic and Stone & Webster have investigated the production of synthetic pipeline gas[6] and hydrogen.[7])

3. Direct steam gasification of coal. (This type of process has also been studied and developed extensively in West Germany.[5])

4. Thermochemical and electrolytic production of hydrogen from water for coal conversion.

This assessment was conducted as a preliminary analysis of the feasibility of nuclear coal conversion, rather than as an exhaustive investigation of all possible coal-conversion techniques. Because of this limited scope, only three specific processes were chosen for evaluation:

1. A modified H-Coal (solution hydrocracking) process which incorporates convective reforming with hot helium to produce crude liquids.

2. Gasification of coal in a steam-fluidized bed heated by helium in tubes immersed in the bed to produce synthesis gas (H_2 + CO).

3. The use of hydrogen and oxygen produced by thermochemical water splitting, using a nuclear energy source, to produce syncrude, methanol, and other products from coal.

These processes were felt to be sufficiently diverse to provide an overview of the coupling of nuclear reactors to provide process heat for coal conversion.

1.2.2 Evaluation of a coal liquefaction process using either a nuclear- or a fossil-heat source for reforming

The study of coal liquefaction via a nuclear- or a fossil-heat source was conducted under subcontract by United Engineers & Constructors Inc. (UE&C) and is reported separately.[8] The results are summarized below. The study constitutes the preliminary design of a coal liquefaction plant that uses either a nuclear reactor or fuel gas produced in the plant as the primary heat source for the process. The process is based on a modified H-Coal process. The costs of products produced by these two processes are estimated and are compared with each other and with some competing products. A block flow diagram of the process is shown in Fig. 1.

The plant converts 60,000 tons per day of western Kentucky high-volatile-b-bituminous (hvbb) coal into liquid hydrocarbons with boiling points in the range of 180° to 975°F. Coker gas, a mixture of gaseous hydrocarbons with a heating value of 1080 Btu/ft^3, is a coproduct of the nuclear-heated plant. The plant also produces salable quantities of ammonia, elemental sulfur, and a solid residue with a heating value of 8235 Btu/lb. This solid residue (char) is relatively high in sulfur and ash but would be an acceptable fuel under some circumstances. Table 1 is a summary of the material requirements and the product quantities for the fossil- and nuclear-heated plants. In Table 2, these quantities are normalized to provide a basis for comparison with other processes.

The cost of the energy contained in the crude liquids ranges from \$1.70 to \$4.06 per 10^6 Btu for the material and utility costs used in the evaluation. Coal was assumed to cost between \$12 and \$42 per ton;

ORNL-DWG 76-11151

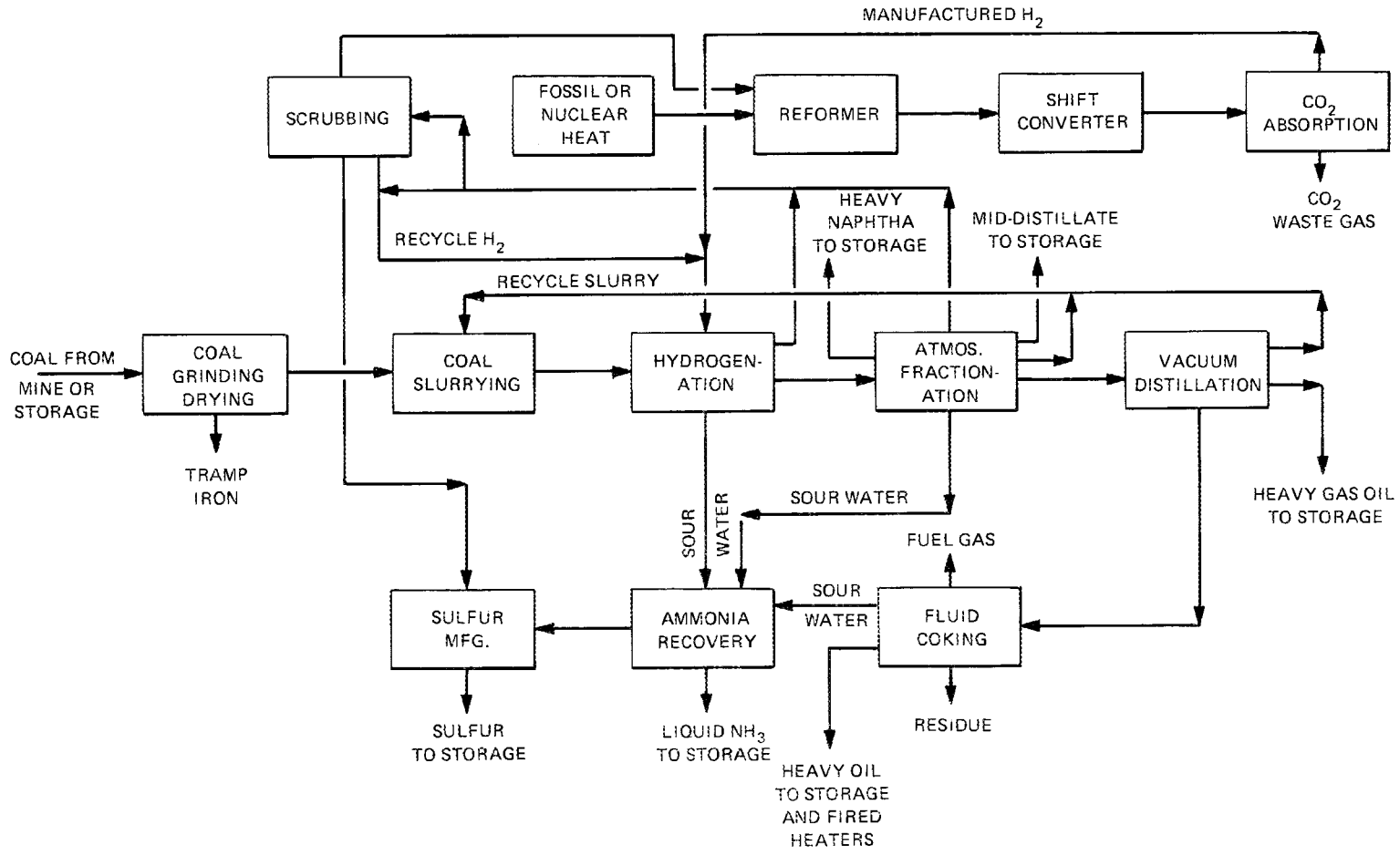

Fig. 1. Block diagram of the coal liquefaction process.

Table 1. Plant operating characteristics

Item	Fossil	Nuclear
Plant size, crude liquids (Btu per day)	923×10^9	$1,033 \times 10^9$
Plant size, total product (Btu per day)	$1,114 \times 10^9$ [a]	$1,305 \times 10^9$ [b]
Energy efficiency, %	78	78
Coal-use efficiency, %	78	90
Stream factor, days per year	330	330
Materials		
Coal (7.5% moisture), tons per day	60,000	60,000
Water, tons per day	150,000	150,000
Catalysts and chemicals, $ per year	21.2×10^6	21.2×10^6
Products		
Heavy naphtha, Btu per day	334×10^9	405×10^9
Middistillate, Btu per day	298×10^9	298×10^9
Heavy oil, Btu per day	247×10^9	286×10^9
Heavy gas oil, Btu per day	44×10^9	44×10^9
Coker gas (1080 Btu/scf), Btu per day		52×10^9
Ammonia, tons per day	441	441
Sulfur (elemental), tons per day	1,200	1,200
Char (8,235 Btu/lb), tons per day	11,518	13,280
Pollutants, tons per day		
Sulfur dioxide	113	28
Nitrogen oxides	45	12
Particulates	2.6	1.1
Solid waste	1,128	494

[a] Includes char.

[b] Includes char and coker gas.

Table 2. Normalized operating characteristics

Item	Fossil	Nuclear
Coal utilization, lb/10^6 Btup[a]	107.7	91.9
Water use, tons per ton of coal	2.51	2.51
lb/10^6 Btup	270.5	230.9
Products		
Heavy naphtha, bbl per ton of coal	1.065	1.324
Middistillate, bbl per ton of coal	0.875	0.875
Heavy gas oil, bbl per ton of coal	0.114	0.114
Heavy oil, bbl per ton of coal	0.687	0.796
Coker gas, scf per ton of coal	0	802
Ammonia, lb per ton of coal	14.7	14.7
Sulfur, lb per ton of coal	40.0	40.0
Char, tons per ton of coal	0.192	0.221

[a]Btup — Btu of usable product, including char.

other cost assumptions are stated in Table 3. Figure 2 shows a breakdown of the product costs for the low- and high-cost bases. The differences between the nuclear- and fossil-heated costs are mostly in the costs of coal and capital. There is no significant difference between the total costs of the nuclear- and fossil-heated products (nuclear plant products are more costly by 1% to 6%).

The costs per unit energy of the crude liquids compared with the approximate current market costs for oil and natural gas are shown in Fig. 3. The coal costs used in this report are also shown. If a plant can be built with utility financing and can burn coal costing less than about $25 per ton, then crude liquids produced by these plants should be competitive with the current cost of oil. Note that the synthetic crude liquids produced have a higher heating value and a lower sulfur content than normal crude oil and should command a somewhat higher price.

Combustion of the crude liquid product (all liquid fractions combined) should produce a sulfur dioxide emission of 0.6 to 0.8 lb/10^6 Btu, which meets the Environmental Protection Agency's new source performance standards for a liquid fuel in large electric generating plants. The sulfur content of the products and internal fuels is given in Table 4. The total water use is estimated to be 27.7 and 32.5 gal/10^6 Btu of total fuel products for the nuclear and fossil cases respectively.

Table 3. Cost estimate bases
(July 1974 dollars)

Item	Low estimate	High estimate
Coal, \$ per 10^6 Btu	0.50	1.75
\$ per ton @ 12,000 Btu/lb	12	42
Nuclear fuel, \$ per 10^6 Btu	0.25	0.60
Raw water, \$ per 1000 gal	0.30	0.30
Fixed charge rate, % per year	15	25
Nuclear reactor cost		
Capital	\$800 million	
Operating	\$9 million per year	
Interest during construction	8% per year	
Standard operating year	330 days	
Chemical plant lifetime	20 years	
Potential credits		
Ammonia[a]	\$60 per ton	
Sulfur[a]	\$25 per ton	
Char (residue, 8235 Btu/lb)	\$3 per ton	

[a]Process Evaluation Group, U.S. Bureau of Mines, *H-Coal Process, Liquid Fuels from Wyodak Coal — Twenty-Five Thousand Barrels Per Day Liquid Fuels Plant, An Economic Analysis*, Report 7523, U.S. Bureau of Mines, Morgantown, W. Va., March 1975.

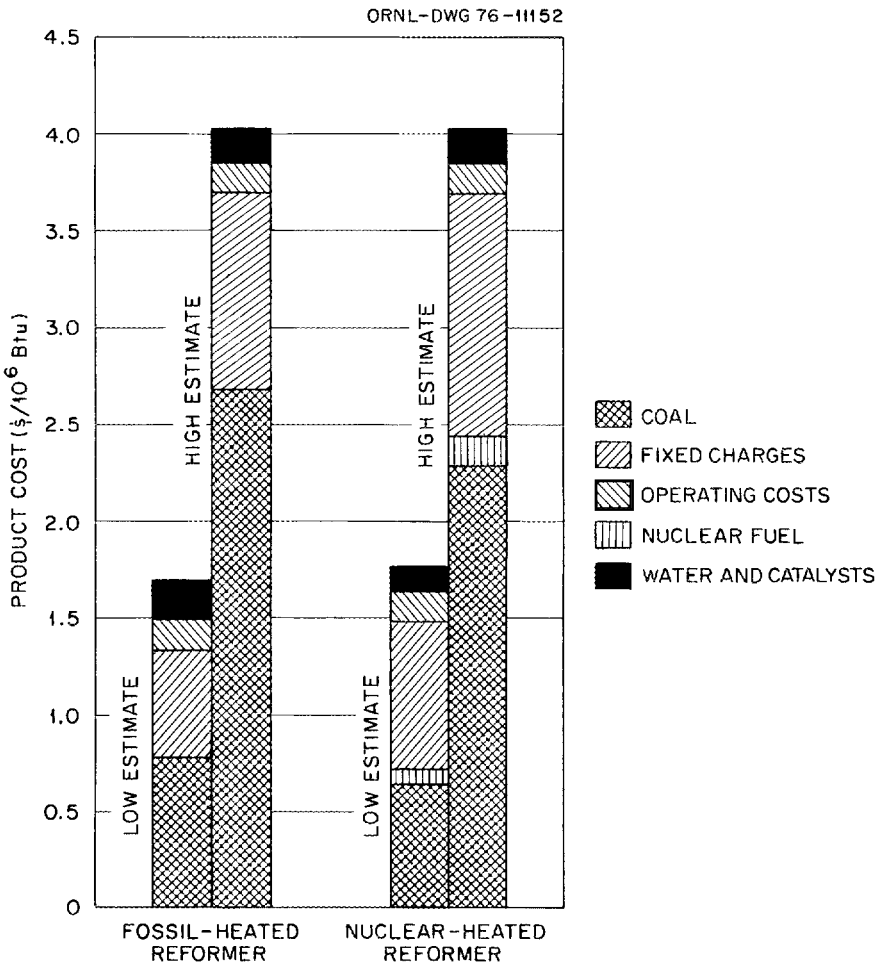

Fig. 2. Product costs.

1.2.2.1 Cost estimate bases

The capital cost of the coal liquefaction plant was estimated using UE&C coal and chemical processing experience and estimates prepared by others for similar plants. Costs for the process and offsite sections were based on estimates published by Hydrocarbon Research, Inc., American Oil Company, the U.S. Bureau of Mines, and General Atomic Company. Applicable costs of equipment and/or sections were converted to July 1974 dollars using the Chemical Engineering (CE) plant cost index. Because the plant consists of multiple, identical equipment trains, the cost of the equipment was assumed to be directly proportional to the plant capacity. The escalated and extrapolated costs were then compared and adjusted as required for differences in design. Electricity generating costs are based on recent UE&C experience.

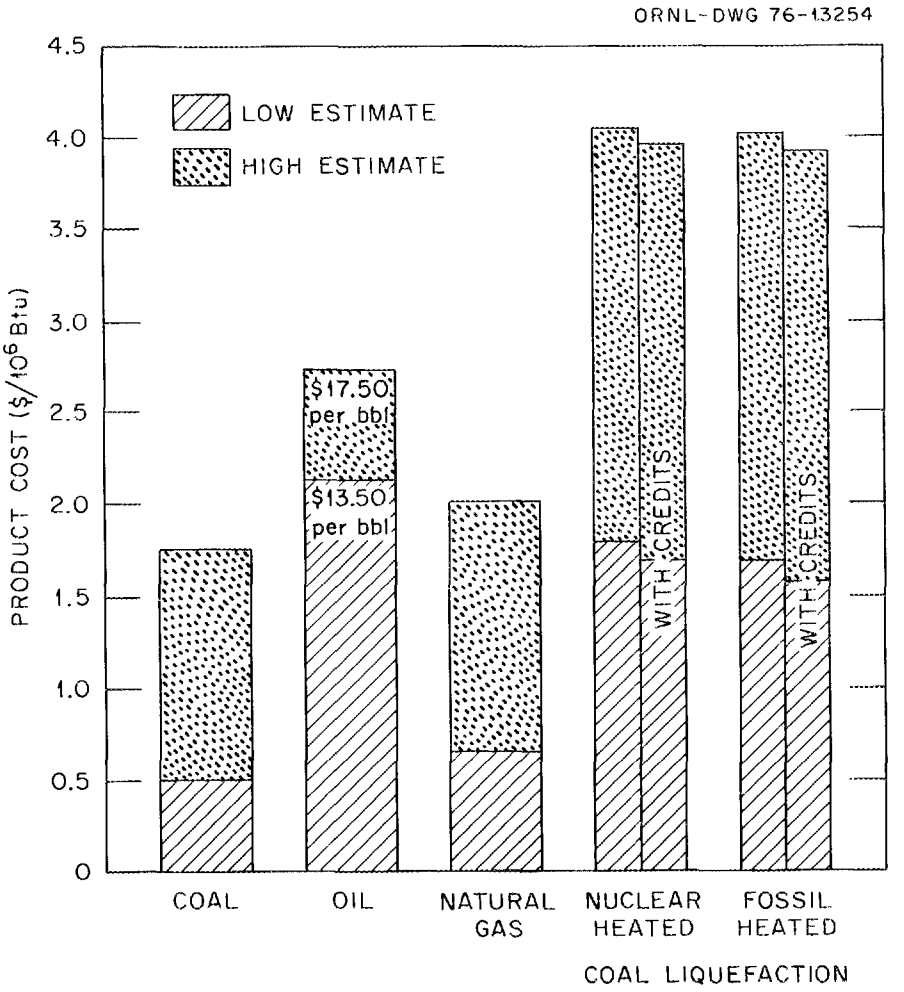

Fig. 3. Comparison of product costs.

The capital costs of the nuclear- and fossil-heated plants are shown in Table 5. The cost of the VHTR system was taken as $800 million as a basis for this study.

The costs of catalysts and other chemicals were obtained from the referenced cost estimates and were escalated to July 1974 dollars using the CE industrial chemicals wholesale price index. These costs were adjusted for the size and stream factor of the plant.

Direct operating costs were also obtained from the referenced estimates. Operating and supervisory labor costs were adjusted for plant size, stream factor, the CE chemical products hourly earnings index, and the CE chemical products productivity index. Maintenance was assumed to be 4% of the capital cost for onsite facilities and 2% for those offsite.

Table 4. Sulfur content of products and internal fuels

Products	Sulfur content	
	wt %	lb/10^6 Btu
Crude liquids		
Heavy naphtha	Trace to 0.15	Trace to 0.08
Middistillate	Trace to 0.15	Trace to 0.08
Heavy gas oil	0.8	0.45
Heavy oil	1.75 to 2.35	1.0 to 1.36
Combined crude liquid (fossil)	0.57 to 0.69	0.32 to 0.39
Combined crude liquid (nuclear)	0.59 to 0.71	0.33 to 0.40[a]
Residue	4.3 to 4.75	5.2 to 5.8
Coker gas (1080 Btu/scf)	0.5	0.23[b]
Burned in process		
Coal feed (as received)	3.5	2.9
Fluid burner gas (42 Btu/scf)	0.16	3.0

[a]Equivalent to 0.8 lb $SO_2/10^6$ Btu [which equals the EPA new source performance standards (NSPS) for liquid fossil-fueled steam generators].

[b]Equivalent to 0.46 lb $SO_2/10^6$ Btu. New Mexico regulation is 0.16 for gas-fired power plants associated with coal gasification plants. The EPA NSPS is 0.1 for petroleum refinery fuel gas of 250 Btu/ft^3.

The capital, operating, and fuel costs for these plants were calculated in dollars per million Btu of products and are presented in Table 6. Two cases, high and low, are shown for each plant.

Also shown in Table 6 are credits for ammonia, sulfur, and the residual char. The ammonia and sulfur are useful industrial-quality products if a customer is found for these quantities. The values of the ammonia and sulfur were obtained from the U.S. Bureau of Mines. The char has a heating value of 8235 Btu/lb, but the sulfur and ash contents are fairly high (4.3 and 36 wt % respectively). The credit of $3 per ton of char was arbitrarily assumed by UE&C.

1.2.2.2 Conclusions

United Engineers concluded that the modified H-Coal process, either fossil or nuclear, can produce synthetic crude liquids that are competitive with and maybe cheaper (with utility financing and cheap coal) than imported crude oil.

Table 5. Capital cost estimate
(July 1974 dollars)

Section	Capital cost ($ x 10^6)	
	Fossil	Nuclear
100 — Coal preparation	80	80
200 — Coal hydrogenation 300 — Liquid products/Solvent recovery	320	320
400 — Fluid coking	60	60
500 — Reforming and shift conversion 600 — Hydrogen production	320	235
700 — Ammonia and sulfur recovery	9	9
1000, 1100, 1200, 1300 — Miscellaneous offsite	178	178
1400 — Electricity generation (by char combustion)	64	36
Tankage	33	33
Subtotal	1064	951
Interest during construction (IDC) — 8% for four years	177	158
VHTR system (includes IDC at 8% for eight years)		800
Total	1241	1909

The use of nuclear process heat for coal liquefaction by this process results in a more efficient utilization of the energy in the coal. However, there is no other significant advantage to be gained.

1.2.3 Conceptual design of a coal-steam gasification process heated by a gas-cooled reactor

1.2.3.1 General

Conceptually, a gas-cooled reactor can be designed to operate at a high enough gas outlet temperature to permit the use of nuclear heat for the promotion of certain chemical reactions. One such proposal is to use nuclear heat to promote the steam-carbon reaction, producing a synthesis gas (primarily carbon monoxide and hydrogen) which may be used to synthesize compounds such as methane (for synthetic pipeline gas),

Table 6. Product cost estimate
(July 1974 dollars)

Item	Product cost ($/10^6 Btu)[a]			
	Fossil heat		Nuclear heat	
	Low[b]	High[b]	Low	High
Coal	0.78	2.71	0.66	2.31
Nuclear fuel			0.06	0.14
Raw water	0.01	0.01	0.01	0.01
Catalysts and chemicals	0.12	0.12	0.10	0.10
Direct operating cost				
Process plant	0.15	0.15	0.12	0.12
Electricity generation	0.03	0.03	0.02	0.02
HTGR			0.03	0.03
Fixed charges	0.61	1.02	0.80	1.33
Total product cost	1.70 to 4.04		1.80 to 4.06	
Potential credits				
Ammonia	0.03		0.02	
Sulfur	0.03		0.03	
Char	0.04		0.04	
Potential product cost	1.60 to 3.94		1.71 to 3.97	

[a]Of gas and liquids, excluding char.

[b]For low- and high-cost assumptions, see Table 3.

ammonia, methanol, or longer chain hydrocarbons, such as gasoline, via the Fischer-Tropsch reaction.

To allow estimation of the feasibility of such a process, a simplified material and heat balance flow sheet for one such scheme has been developed. The flow sheet is based on a VHTR with a gas outlet temperature of 982°C (1800°F) and a thermal rating of 3000 MW(t).[9]

The heat from the nuclear reactor is transferred to the coal processing system by recirculating helium gas. To accomplish this, part of the reactor heat contained in a primary helium recirculating stream is transferred to a secondary helium recirculating stream by an intermediate heat exchanger (IHX). The heat content of the secondary helium stream is then used in the coal processing plant. The heat remaining in the primary helium is used to generate high-pressure steam, part of which supplies power to the helium circulators and to the coal-plant product gas compressor; the remainder generates electricity for in-plant use and for sale. About 62% of the VHTR thermal output is used in the coal processing plant; the remainder is used to generate electricity.

The secondary helium stream, heated to 932°C (1710°F) in the IHX, is routed to the steam-carbon reactor where it is cooled to 850°C (1562°F) by heat exchange with the reacting bed of coal at 800°C (1472°F). The helium flow leaving the steam-carbon reactor is split, with about 16.5% flowing to the carbonizer and the remainder flowing to the process steam generator. The helium leaves the carbonizer and the steam generator at the same temperature (662°C or 1224°F), is recombined, compressed, and returned to the IHX.

Incorporation of an IHX is dictated by the need for isolation of the coal processing system from the nuclear reactor system to reduce the danger of cross-contamination from leaks that might occur as a result of the high-temperature, corrosive conditions in the coal-conversion plant.

The use of the IHX decreases the plant capacity as a result of the inherent temperature gradients associated with heat exchange equipment. An approach temperature or minimum temperature difference of 50°C (90°F) was assigned to the IHX and to the steam-carbon process heat exchanger (PHX) in the high-temperature section of the secondary helium loop. The sum of these approach temperatures (the temperature drop required to achieve the desired heat transfer) for the intermediate and the steam-carbon reactor heat exchangers is 100°C (180°F). This temperature decrease lowers the quantity of heat available for transfer to the reactor fluid bed and therefore limits the gasifier production rate. Higher or lower fluid-bed temperatures affect the quantity of heat transferred and thus the reactor throughput. Additionally, since the effect of temperature on the reaction rate is marked, changes in bed temperature change the gasifier size (and its capital cost). Lower bed temperatures require larger reactors and vice versa for a constant gasification rate. With a sufficient carbon supply, a higher helium temperature results in a higher heat transfer rate and bed temperature and thus a higher gas generation rate.

The reactor bed temperature is a function of the heat transfer rate and the reaction rate as expressed by

$$q_r k w = UA \ \Delta T_{lm} \quad ,$$

where q_r is the heat of reaction, k is the specific reaction rate as a function of temperature, and w is the quantity of carbon available for reaction.[10] This product is equated to the product of U, the overall heat transfer coefficient, multiplied by A, the heat transfer area, and ΔT_{lm}, the log mean temperature difference, which is a function of the inlet and outlet helium temperatures and the bed temperature. By fixing values for w, A, and q_r, calculating the overall heat transfer coefficient U, and substituting the appropriate value for k (from the Arrhenius equation, $k = k_o e^{-E/RT}$) as determined by experiments on the coal to be processed, a bed temperature and gas generation rate may be calculated.

For this flow sheet, since specific experimental data were lacking, a nominal reaction temperature of 800°C (1472°F) was assumed, thus fixing the average temperature difference, the heat input rate to the reactor, and, in turn, the coal consumption rate. With these values fixed, the remaining flows were calculated and the heat balance determined.

1.2.3.2 Coal reactivity

The rate of coal gasification in the steam-carbon reaction is primarily a function of the reaction temperature and the inherent reactivity of the coal. The reactivity of the coal is generally dependent on its rank, ranging from a maximum for lignite to a minimum for anthracite.[11] For example, as shown in Fig. 4, at 800°C (1472°F) the specific reaction rate for lignite in a laboratory test was about 38% of the carbon gasified per minute, whereas anthracite, in semicommercial tests,[12] showed a specific carbon conversion rate of only about 0.19%/min, a difference of 200-fold.

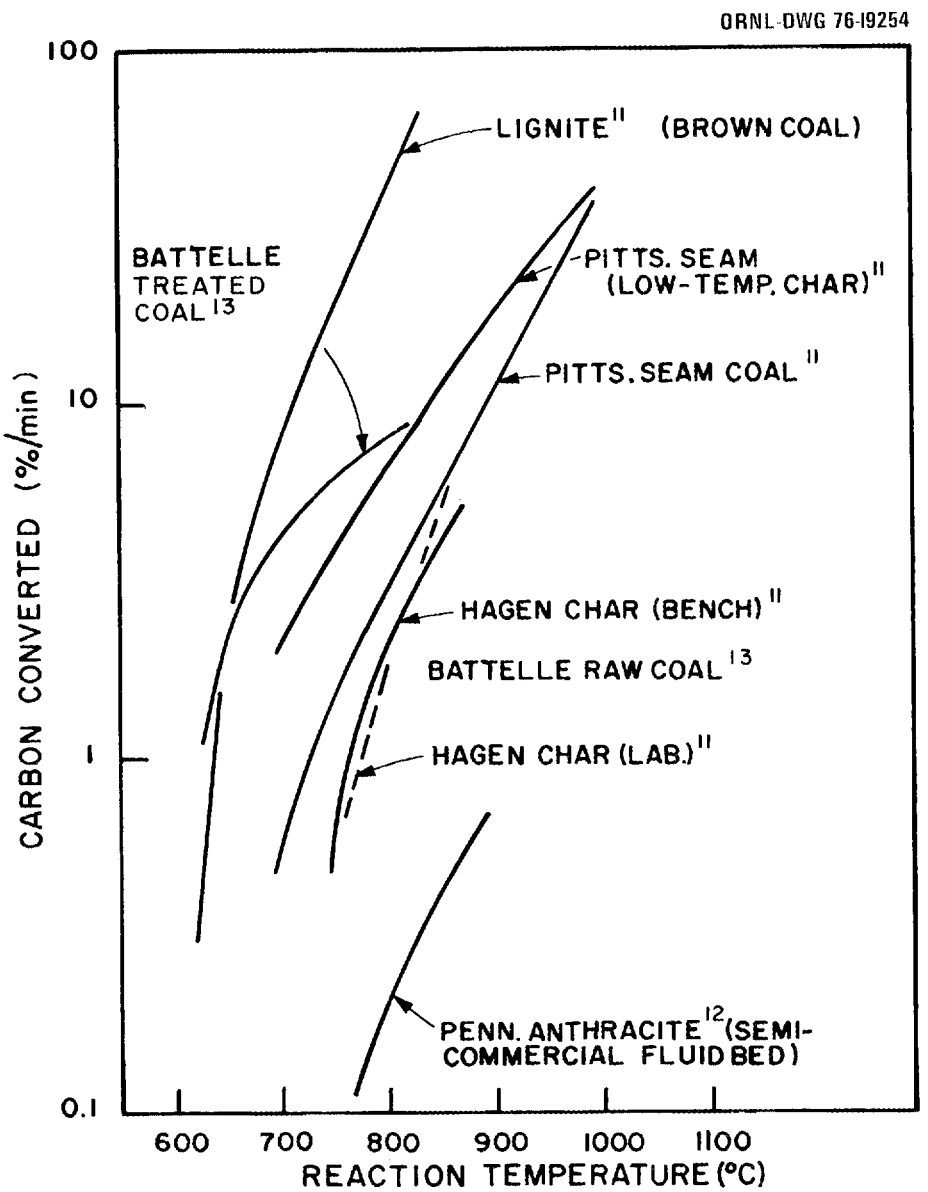

Fig. 4. Steam-carbon reaction rates for various types of coal.

Higher temperatures greatly increase the reaction rates — as exemplified by the Koppers-Totzek reactor where the gasification of carbon approaches 100% — and the reaction essentially is accomplished instantaneously at the nominal operating temperature of 1800°C (3272°F).

Specific reaction rates, at temperatures up to about 900°C (1652°F), can be enhanced by pretreatment of the feed coal and by the addition of inorganic salts, for example, calcium oxides or carbonates. A case in point is Battelle Treated Coal (BTC), where aqueous treatment with lime and NaOH (nominally to remove sulfur) results in an increase by a factor of about 5 in the carbon-steam reaction rate compared with that of the untreated coal, using a Pittsburgh seam coal as feed, a reaction temperature of 825°C (1517°F), and a pressure of 500 psig.[13]

According to Van Heek, Juentgen, and Peters,[11] hard coals exhibit a nearly constant reactivity over a range of volatile matter from about 5% to 30%. Above about 35%-volatile matter, the carbon steam reaction rate starts to increase. Van Heek, Juentgen, and Peters found that the effect of steam pressure, above 10 atm and up to 70 atm, on reaction rates of coals is small. (However, for lignite, a minimum rate appeared at about 35 atm and a maximum at about 50 atm.) Particle size also had no marked effect below about 2 mm (0.08 in.). The only effect of an increase in steam pressure on the coal gasification reaction appeared to be an increase in the concentration of methane in the outlet gas, presumably due to an increase in the hydrogasification and methanation reaction rates, which are pressure sensitive.

The use of nuclear heat, with its inherent temperature limitations resulting from the multiple transfers of heat required to transport heat from the nuclear fuel to the gasifier, requires that a relatively reactive coal be used or that the volume of the reacting coal bed in the converter be extremely large. Hence, if nuclear heat is used for the steam-carbon reaction, it will probably be applied to the conversion of the higher volatility coals, lignites, or coals whose reactivity has been enhanced catalytically. For this flow sheet, a Pittsburgh seam coal having a volatile content of 36.0% was chosen as the feed material.

1.2.3.3 Processing plant chemistry

In the steam-carbon reaction system, the following chemical reactions are important:

1. *Coal devolatilization or carbonization* — Coal volatile matter $\rightarrow C + CH_4$ + light oils and tars. The heat requirement for this reaction is estimated to be about 830 cal/g of coal (1500 Btu/lb). For coals of higher volatility, the temperature required to initiate devolatilization is about 300°C (572°F), and devolatilization is essentially complete at about 700°C (1292°F).

2. *Carbon-steam reaction* — $C + H_2O \rightarrow H_2 + CO$, $\Delta H = 32{,}400$ cal/g-mole (58,300 Btu/lb-mole). Depending on coal reactivity, this reaction will begin at a temperature of

about 650°C (1202°F) for lignite.[11] The reaction rate increases rapidly with temperature, with the reaction becoming essentially instantaneous at temperatures above about 1100°C (2012°F). Catalytic materials such as lime will accelerate the reaction at lower temperatures with some coals.

3. *Carbon monoxide shift reaction* — $CO + H_2O \rightarrow CO_2 + H_2$, ΔH = -9200 cal/g-mole (-16,600 Btu/lb-mole). With sufficient gas residence time and in the presence of catalytic surfaces such as ash residues in the reacting bed, this reaction will approach thermodynamic equilibrium.[14-16] The reaction rate is accelerated by higher temperatures.

4. *Hydrogasification reaction* — $C + 2H_2 \rightarrow CH_4$, ΔH = -21,200 cal/g-mole (-38,200 Btu/lb-mole). This reaction proceeds primarily at lower temperatures (less than 1100°C or 2012°F) and at pressures greater than atmospheric. Higher pressures and lower temperatures increase the equilibrium methane concentration.

The compositions shown on the flow sheet for the steam-carbon reaction were calculated by assuming that the percent water decomposition was about 60%, that the shift reaction was at thermodynamic equilibrium,[17] and that the amount of methane formed was small (about 3 mole %). Higher quantities of methane would be formed if the reaction pressure were increased [the equilibrium concentration being about 8% to 10% at 20 atm and 16% to 18% at 68 atm and 800°C (1472°F)]. Thus, if the ultimate product of the reaction were to be synthetic pipeline gas rather than carbon monoxide and hydrogen, it would be advantageous to increase the reaction pressure, maximizing the conversion of carbon to methane in the reactor rather than in an external methanator.

1.2.3.4 Flow sheet discussion

The nuclear-heat-driven steam-carbon process as conceptually depicted in the flow sheet (Fig. 5) results in the plant yields and thermal efficiencies shown in Table 7. The overall thermal efficiency of the system is defined as the ratio of the total heating values of the plant products (including the thermal equivalent of the electricity generated for sale) to the total heating value of the coal feed to the plant plus the heat generated by the VHTR heat source.

Because the flow sheet described for the process was conceptual in nature, the assumption was made that sufficient waste and excess heat were available in the process offgases and the process steam generator to supply heat for the plant auxiliary processes such as coal driers and product gas purifiers. An in-plant electrical requirement of 14 MW(e) was assumed to be available from the 319-MW(e) power plant. The large power consumers, that is, the helium circulators and the product gas compressors, were assumed to be driven directly by high-pressure steam

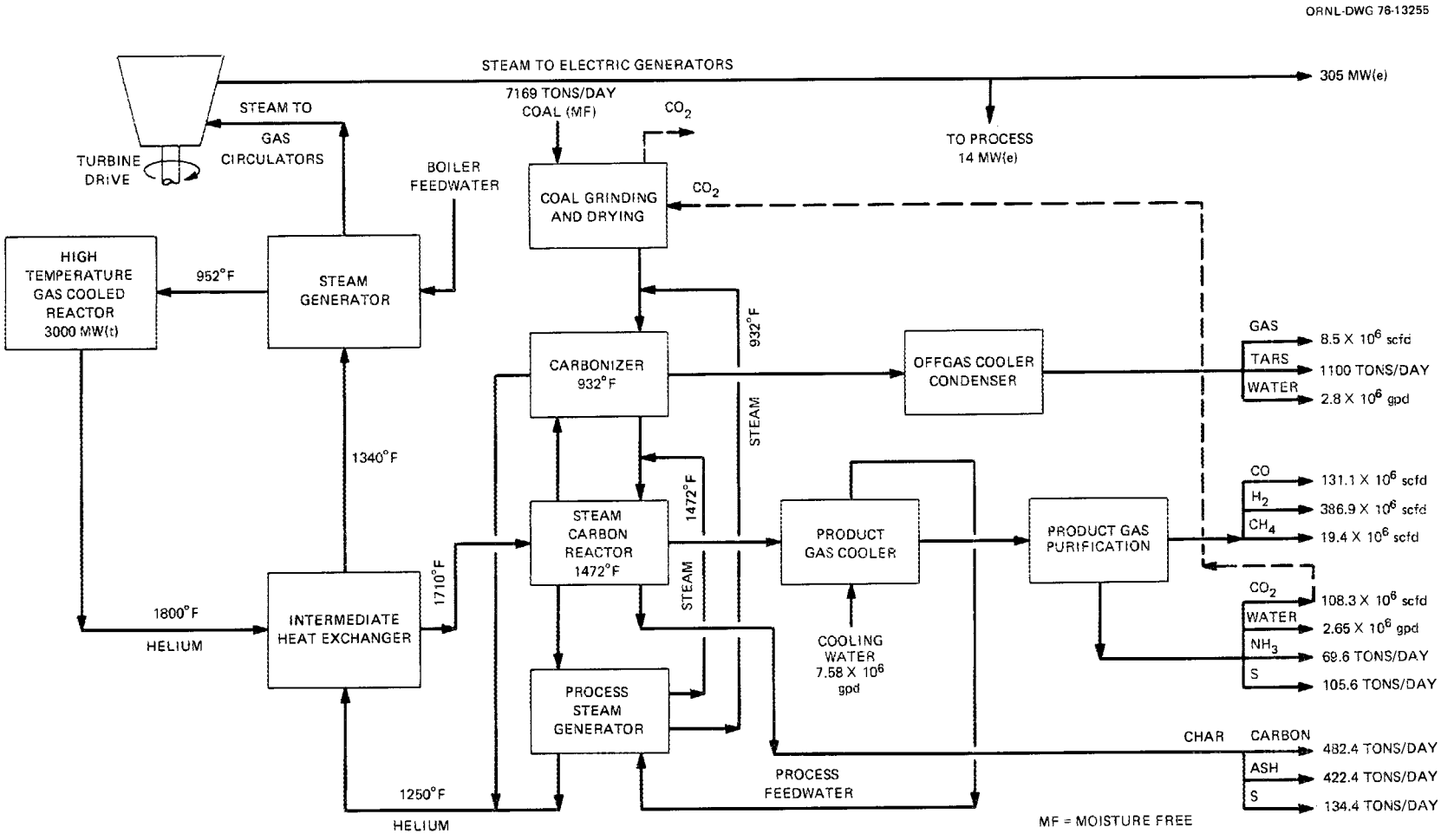

Fig. 5. Steam gasification of coal using nuclear heat.

Table 7. Plant efficiency summaries

System	Input (Btu per day)		Output (Btu per day)		Thermal efficiency (%)
Overall	Coal	2.01×10^{11}	Coal products	2.57×10^{11}	63.1[a]
	VHTR	2.46×10^{11}	Electric power	0.25×10^{11}	
Total		4.47×10^{11}		2.82×10^{11}	
Coal conversion plant	Coal	2.01×10^{11}	Product gas	1.96×10^{11}	71.2[a,b]
	VHTR	1.59×10^{11}	Coal gas[c]	0.21×10^{11}	
	Electric power	0.01×10^{11}	Tar and light oil	0.40×10^{11}	
Total		3.61×10^{11}		2.57×10^{11}	
Power plant		0.87×10^{11}[d]		0.25×10^{11}	28.7

[a]Not including char heating value.

[b]Btu in products/Btu in coal feed = 128%.

[c]Light volatiles from carbonizer.

[d]Includes prorated energy input to primary helium circulators.

from the VHTR steam generator. On this basis, the overall plant thermal efficiency was found to be 63.1%. If the generation of electricity and the corresponding VHTR heat input are excluded from the energy balance, the overall thermal efficiency of the coal plant is 71.2%.

1.2.3.5 Materials of construction

The outlet temperature of the VHTR was assumed to be 982°C (1800°F), which is about 222°C (400°F) higher than current HTGR designs. High-temperature alloys such as Incoloy 800H are therefore extensively required in the high-temperature areas of the plant such as the IHX, where the maximum operating temperature is 982°C (1800°F), and the carbonizer and steam-carbon reactor PHX, which contain helium at 850°C (1562°F) and 932°C (1710°F) respectively. In addition to the high internal temperature, the PHXs are subject to the erosive action and stresses associated with a large, turbulent, fluidized coal bed, as well as the effects of the corrosive environment of the gasifier.

The reactor shells of both the carbonizer and the steam-carbon reactor are constructed of carbon steel clad on the inside with a corrosion-resistant layer of stainless steel. To protect the reactor vessel wall from the high reaction temperatures, it is lined with an insulating refractory material such as Kaolin.

Periodic replacement of the high-temperature heat exchange surfaces and of the refractory vessel lining will undoubtedly be required. The frequency of such replacements cannot, at this time, be estimated with any degree of accuracy. However, for conceptual cost estimation purposes, the lifetime of these components was taken to be five years.

The PHX materials problem is anticipated to be the most severe. Standard materials of construction used in conventional chemical plants handling similar compounds and in coal-fired steam plants may be used for most other components.

1.2.3.6 Pollution

No significant pollution problems should be encountered in the coal-conversion plant because the design incorporates adequate abatement equipment in the processing steps. Solid wastes, primarily char, will be returned to the mine or trucked to a suitable site for burial. Aqueous wastes will be treated to remove oils and tars, then used as makeup to the recirculating cooling water system, where most of the remaining organics will be decomposed by oxidation. The cooling tower blowdown will be combined with the sanitary sewage and will be subjected to complete secondary treatment prior to discharge to adjacent surface waters. Waste gases will be scrubbed prior to discharge to the atmosphere to remove noxious compounds. The scrub water will be treated to remove these compounds prior to combination with other plant wastewater. Any sulfur compounds and ammonia removed during this treatment will be combined with other similar plant streams and recovered. Minor amounts of ammonia and coal-derived organics, in quantities too small to be economically reclaimable, will be disposed of by incineration.

1.2.3.7 Process flow description

1.2.3.7.1 Nuclear heat source

The VHTR is the source of all heat used in the coal-conversion process. The heat from the nuclear reactor is transferred to the process by recirculating helium gas in two separate loops, the primary loop and the secondary loop. In operation, heat is extracted from the nuclear reactor core by the primary loop helium and transferred in the IHX to the helium in the secondary gas loop and then to the steam generator where it is used to produce high-pressure steam. The high-pressure steam is used to drive the primary and secondary helium circulators and the gas compressors for the coal-conversion-plant product gas and to generate electrical power (about 4% of which is used in the coal plant and the remainder of which is sold).

The heat transferred to the secondary helium stream is used to supply the heat required for the carbonization and the steam-carbon reactions and to generate the process steam needed for fluidization of the coal in the carbonizer and the steam-carbon reactor.

1.2.3.7.2 Coal preparation

Cleaned coal from the mine is retrieved from storage, ground and sized to 100% -10 mesh, and fed into the fluid-bed coal drier, using carbon dioxide from the gas scrubber system as the fluidizing gas. The carbon dioxide is heated by low-pressure steam obtained from the carbonizer offgas condenser. Essentially all the free moisture in the coal is assumed to be removed in the drying step. The feed coal analysis is shown in Table 8.

Dust collectors will be installed at all coal and char transfer points, as well as in the coal grinding and pulverizing system. The coal dust will be collected at a central point, briquetted, ground, sized, and combined with the primary coal flow for use in the plant.

1.2.3.7.3 Carbonizer

Dried, pulverized coal is fed from the coal drier into a high-velocity section of the fluid-bed carbonization reactor. Here the coal is rapidly heated by contact with hot carbonized coal and with the superheated fluidizing steam to the devolatilization temperature of 500°C (932°F). The high-velocity fluid-bed section discharges into a low-velocity section, which provides sufficient residence time for about 60% of the volatile matter in the coal to vaporize. Heat is supplied to the carbonizer by a portion of the secondary helium stream (about 16.5% of the flow) after it leaves the steam-carbon reactor.

Fluidizing steam and the contained volatiles pass through cyclones to remove particulates, then pass to a heat-recovery condenser where the steam, light oils, and tars are condensed and separated from the

Table 8. Dried feed coal analyses

Item	Wt %
Proximate analysis	
Volatile matter	36.0
Fixed carbon	57.3
H_2O	0.8
Ash	5.9
Ultimate analysis (moisture and ash-free basis)	
Carbon	84.4
Hydrogen	5.6
Oxygen	5.0
Nitrogen	1.0
Sulfur	4.0
Higher heating value (Btu/lb)	14,000

noncondensable hydrocarbon gases. Light oils and tars are recovered from the condensate and are stored and sold with the noncondensable hydrocarbons.

Heat removed from the vapor condenser is used to generate low-pressure steam to supply heat to various process auxiliaries.

1.2.3.7.4 Steam-carbon reactor

Carbonized coal from the carbonizer is fed to the steam-carbon reactor (a fluid-bed reactor using steam as the fluidizing gas). In this reactor, the steam-carbon and carbon monoxide shift reactions occur, gasifying about 90% of the carbon in the coal, resulting in a raw product gas consisting primarily of hydrogen, carbon monoxide, carbon dioxide, and excess steam. Residual volatiles in the coal are volatilized and reformed in the reactor to hydrogen and carbon monoxide. Heat is supplied to the reactor by the secondary helium flow through the PHX, an array of metal tubes immersed in the fluid bed. The rapidity of the reaction is governed by the coal reactivity and the temperature of the bed. The attainable rate of heat transfer to the bed and the temperature of the circulating helium are the factors determining the minimum gasifier volume.

1.2.3.7.5 Raw gas purification system

The raw product gas from the steam-carbon reactor passes through a staged cyclone gas-solid separator into the gas cooler. The 800°C (1472°F) gas is cooled to about 349°C (660°F), exchanging its heat with the feedwater stream to the process steam generator. The raw product gas is then quenched and particulates removed in a water scrub tower, compressed to 1000 psia, and sent to an absorption gas purification (Purisol) unit. Here, the sour gas constituents, primarily carbon dioxide and hydrogen sulfide, will be removed by physical absorption in an organic solvent (*N*-methyl-pyrrolidone). The carbon dioxide and hydrogen sulfide are separated by the absorption process; the carbon dioxide is returned to the head end of the plant for use in the coal drying and grinding steps and as an inert gas blanket in the coal storage silos and feed hoppers, after which it is vented to the atmosphere. The hydrogen sulfide is sent to a Claus unit and then to a Claus tail-gas treatment unit to convert the hydrogen sulfide to potentially salable elemental sulfur.

1.2.3.7.6 Process steam generator

Process steam is required both as a reactant and as a fluidizing gas in the steam-carbon reactor and as a fluidizing gas in the carbonizer. All the required process steam is generated in the process steam generator by heat interchange with a portion of the secondary helium stream (approximately 83.5% of the flow) after it leaves the steam-carbon reactor. Process steam is generated at about 10-atm pressure and superheated to 500°C (932°F) or 800°C (1472°F) for use in the carbonizer and the steam-carbon reactor respectively.

1.2.3.7.7 Electrical generation

Heat in excess of that usable in the steam-carbon reactor is used to generate electric power which, except for the approximately 4% used in the coal plant, is available for sale. The conversion efficiency of thermal energy to electrical energy was taken as 32%. However, part of the available energy in the steam was assumed to be used to drive the primary helium circulators. This energy use was prorated between the coal plant and the electrical plant, resulting in a net thermal energy conversion efficiency of 28.7% for the electrical power plant.

1.2.3.7.8 Cooling water

The cooling requirements for the plant are met by a recirculating water cooling system equipped with a conventional evaporative type, forced-draft cooling tower. Cooling water will be supplied at 90°F and returned at 130°F. The circulation rate is approximately 131,000 gpm. The water makeup rate is estimated to be 5280 gpm.

1.2.3.8 Cost estimate

1.2.3.8.1 Capital cost

The capital cost of the coal processing portion of the plant complex was derived by listing the major equipment items and their sizes based on the heat and material balance flow sheet. Costs of these equipment items were then estimated along with the labor required for installation. From this tabulation, a total installed equipment cost was derived, which was then translated to a plant capital cost. To this was added interest during construction, to give a total plant investment which was converted to July 1974 dollars. The capital cost of the VHTR system, which includes the nuclear reactor, helium circulators, and IHX, was taken as $781.5 million, including interest during construction (8% for eight years).[18] The capital cost for the nuclear-coal plant complex is shown in Table 9.

Table 9. Capital cost estimate
(July 1974 dollars)

Cost item	Capital cost ($\$10^6$)
Coal processing plant	288
Interest during construction (IDC) (8% for four years)	46
	334
VHTR (includes IDC — 8% for eight years)	781.5
	1115.5

1.2.3.8.2 Product cost

The contributions to the product mix on the basis of Btu content from the steam-carbon plant are given in Table 10. For this estimate, each major price variable was treated parametrically over a range. The resulting costs (Table 11) were then normalized by dividing by the total thermal value of the plant product to give a unit cost per million Btu of product. All plant products were assumed to be of equal value, based on their heats of combustion.

Major cost variables included coal, assumed to vary from $0.50 to $1.75 per million Btu; nuclear fuel, from $0.25 to $0.60 per million Btu; the fixed charge rate, 15% and 25% per year; and the credit assumed for the sale of excess electric power, 13 and 18 mills/kWhr (Table 12).

One of the major cost items is the cost of maintaining the internals in the carbonizer and the steam-carbon reactor. The heat exchanger tubes in these units operate at high internal temperatures

Table 10. Plant product summary

Product	Tons per day	Btu per day
Carbonizer		
Light oil + tar	1.10×10^3	0.40×10^{11}
Gas ($C_1 \rightarrow C_4$)	0.45×10^3	0.21×10^{11}
Total		0.61×10^{11}
Steam-carbon reactor		
Gases		
H_2	1.08×10^3	1.31×10^{11}
CO	5.11×10^3	0.44×10^{11}
CH_4	0.43×10^3	0.21×10^{11}
Total		1.96×10^{11}
Solids		
Char	1.04×10^3	0.14×10^{11}[a]
Electric power		0.25×10^{11}

[a]The char is assumed to be waste and is not included in total heat output.

(850° to 940°C or 1562° to 1724°F), and their outside surfaces are exposed to a corrosive-erosive atmosphere. No relevant data on the life expectancy of the material of construction (Incology 800H) were available; hence, it was arbitrarily assumed that the heat exchange tubing would require replacement every five years. The cost assigned to the plant product for maintenance of these units reflects the high material and labor costs involved in replacing the tubing.

The operating cost assigned to the VHTR is $9 million per year,[18] and the operating cost for the coal plant was derived, based on plant capital cost, from a value associated with a reactor-heated H-Coal liquefaction plant.[19] The cost of operating the electrical generators was assumed to be included in the VHTR operating cost.

1.2.4 Hydrogen from water splitting — electrolytic and thermochemical — and its application to fuel synthesis

Essentially all the hydrogen produced today is derived from hydrocarbons (methane and naphtha). Hydrogen made by the electrolysis of water is quite expensive and is reserved for uses requiring very high

Table 11. Product cost estimate of VHTR-heated steam-carbon process (July 1974 dollars)

System cost	$/10^6 Btu product	
	Low value	High value
Coal	0.35	1.23
Nuclear fuel	0.06	0.14
Water	0.01	0.01
Chemicals	0.02	0.02
Coal plant maintenance	0.14	0.14
Direct operating cost		
Coal plant	0.04	0.04
VHTR	0.12	0.12
Fixed charges (15% and 25%)	1.80	3.00
Total product cost	2.54	4.70
Less credit for electric power (305 MW)	0.37	0.51
Net product cost	2.17	4.19

Plant by-products	Quantity (tons per day)	Potential credit ($/10^6 Btu product)
Sulfur	68.8 @ $25 per ton	0.007
Ammonia	105.8 @ $60 per ton	0.025
Char	1039 @ $3 per ton	0.013
Total		0.045

purity. No commercial hydrogen has yet been made by thermochemical water splitting.

In the future, alternative means of hydrogen production will be required because of the increased demand for hydrogen and the limited supply of hydrocarbon feedstock. Table 13 presents four estimates derived by the National Aeronautics and Space Administration (NASA) and its contractors for U.S. hydrogen demand by the year 2000.[7,20-22] The most conservative of these estimates projects a fivefold increase in hydrogen requirement. Essentially all the additional hydrogen will be made from natural gas, naphtha, and coal. For the near term, our estimates show hydrogen derived from thermochemical or electrolytic processes to be at least a factor of 2 more expensive than hydrogen derived from coal.

Table 12. Product cost estimate bases
(July 1974 dollars)

Cost item	Low estimate	High estimate
Coal, $\$/10^6$ Btu	0.50	1.75
Nuclear fuel, $\$/10^6$ Btu	0.25	0.60
Water, \$/1000 gal	0.30	0.30
Fixed charge rate, % per year	15	25
Nuclear reactor cost		
Capital — $\$781.5 \times 10^6$		
Operating — $\$9 \times 10^6$ per year		
Credit for excess electric power, \$/kWhr	0.013	0.018
Standard operating year — 330 days		

However, one can clearly see by taking the long view that hydrogen production directly from water via electrolytic or thermochemical processes will ultimately become important.

1.2.4.1 Thermochemical processes

A very large number of chemical cycles are known to be possible, and many have been analyzed and evaluated in U.S. and foreign programs. The Institute of Gas Technology (IGT)[22] and Bowman[23] have published discussions of thermochemical cycles.

Within the VHTR program, attention has been focused on the Westinghouse hydrogen production process, which is a hybrid thermochemical-electrolytic cycle being developed by Westinghouse Astronuclear Laboratory.[21] The reaction steps are as follows:

Solution	$SO_2 + H_2O \rightarrow H_2SO_3$
Anode	$H_2SO_3 + H_2O \rightarrow 2e^- + H_2SO_4 + 2H^+$
Cathode	$2H^+ + 2e \rightarrow H_2$
Thermal decomposition	$H_2SO_4 \rightarrow SO_2 + H_2O + 1/2\ O_2$
Net reaction	$H_2O \rightarrow H_2 + 1/2\ O_2$.

Westinghouse has confirmed the various steps in laboratory tests.

In their assessment of Westinghouse's thermochemical cycle for hydrogen production, Bamberger and Braunstein of ORNL concluded that, from a chemical viewpoint, the process appears feasible and attractive.[24]

Table 13. Estimates of U.S. hydrogen requirements (in 10^{15} Btu)

Item	1972-1973			2000							
				HEST reference	HEST maximum	GA	W[d]			IGT	
	IGT[a]	HEST[b]	GA[c]				Low	Base	High	Low	High
Residential/commercial										5.1	14.4
Ammonia, methanol, and miscellaneous chemicals	0.42	0.46	0.60	2.37	9.25	2.81	0.76	1.47	2.14	1.5	
Petroleum refining	0.42	0.47	0.48	0.78	0.78	0.60	0.58	2.41	2.41	0.9	
Synthetic fuels				1.71	7.6	6.99	5.82	10.32	13.33	7.1	29.1
Steelmaking				0.22	0.65	2.11	0.09	0.18	0.36	0.7	
Transportation, utility, other	0.05	0.07	0.06	0.40	4.21	0.37		0.39	1.14	2.4	
Total	0.89	1.00	1.14	5.48	22.49	12.88	7.25	14.77	19.38	17.7	43.5

[a]Institute of Gas Technology.

[b]Hydrogen Energy Systems Technology.

[c]General Atomic Company.

[d]Westinghouse Astronuclear Laboratory, Westinghouse Electric Corporation.

Its advantages include chemical simplicity; use of abundant, low-cost reagents; and no requirement for solids handling. Problems identified included development of suitable separators for the anolyte and catholyte solutions; substitution of electrode materials more suitable than platinized platinum; demonstration of practical construction materials compatible with hot concentrated H_2SO_4; and possible effects of corrosion products transported through the system on other parts of the cycle, especially the electrolytic step.

The cycle is projected to achieve a 45% to 47% thermal efficiency, which is the highest suggested for any such cycle to date. The Westinghouse estimate of hydrogen production cost is \$4.45 per 10^6 Btu. However, this estimate assumes nuclear plant capital costs (\$447 x 10^6) and fuel cycle costs (\$0.26 per 10^6 Btu) substantially lower than those derived for the VHTR by ORNL. A similar analysis of the Westinghouse water decomposition process by UE&C for ORNL resulted in hydrogen costs of \$5.17 to \$8.80 per 10^6 Btu. The range of costs reflects a nuclear plant capital cost of \$725 x 10^6 with 15% and 25% fixed charge rates and \$0.25 to \$0.60 per 10^6 Btu nuclear fuel cycle cost.

1.2.4.2 Electrolysis

As previously stated, the production of hydrogen directly from water will ultimately become important. A great deal of emphasis has been placed on analysis and development of thermochemical processes for water splitting. The competition for thermochemical water splitting is electrolysis. It is of interest to consider how the same advanced nuclear concept (VHTR) used in the analysis of thermochemical cycles would affect electrolytic hydrogen production, if it were applied to generate electricity in a direct coupled mode.

Such a study was conducted by IGT for NASA.[25] The study is based on a fully dedicated, nuclear-based hydrogen production facility. The advanced-facility concept includes:

1. Advanced-cycle VHTR with 1800°F core outlet temperature (50% conversion efficiency).

2. Acyclic dc generators (99.5% transmission and control efficiency).

3. High-pressure, high-current-density electrolyzers based on solid polymer electrolyte technology (86.3% conversion efficiency to hydrogen at a pipeline pressure of 1000 psia).

4. Overall efficiency = 43%.

The base case hydrogen product cost presented by IGT is \$5.07 per 10^6 Btu. Using ORNL-developed VHTR costs, the hydrogen product cost is essentially the same as that projected by UE&C for the Westinghouse thermochemical process.

It is clear that the high-temperature reactors that are necessary for thermochemical processes can also contribute high efficiencies when combined with electrolysis technology. Although the theoretical efficiency of some thermochemical cycles is significantly higher than that of the electrolytic process, the thermochemical processes are very complex, and actually achievable efficiencies may not be superior.

Except for hydrogen production from natural gas or oil at current prices, onsite generation from coal is the cheapest method available. In the future, when carbon may become very expensive, it is conceivable that hydrogen from water may become competitive. This possibility was examined during the course of this study.

Assuming the existence of a thermochemical hydrogen plant driven by a 3000-MW(t) VHTR at an efficiency of 47% (ref. 3) (hydrogen energy out/VHTR energy in), the flows in a plant producing methanol from coal were calculated. The methanol case was selected because it results in the largest yield increase. As depicted schematically in Fig. 6, the consumption of 8385 tons per day of H_2O (1398 gpm) would generate 932 tons per day of hydrogen (354 x 10^6 scfd) and 7453 tons per day of oxygen. Using all the hydrogen in a Koppers-Totzek/ICI (Imperial Chemical Industries) methanol production system, 7700 tons per day of methanol would be produced from 5233 tons per day of eastern coal with the following as-received composition:

69.9% C	1.1% S
4.9% H	13.7% ash
7.0% O	2.0% H_2O
1.4% N	Higher heating value of 12,700 Btu/lb

The oxygen required by the gasifier would be only about 55% of that available, with the excess (export) oxygen amounting to 3392 tons per day. About 69% of the gasifier steam requirement of 1758 tons per day could be obtained from the gasifier cooling jacket, and about 7900 tons per day of high-pressure steam would be generated in the waste-heat boiler above the gasifier. Six low-pressure four-head Koppers-Totzek gasifiers would be required. Introduction of the hydrogen into the cleaned synthesis-gas stream changes the molar ratio of hydrogen to ($CO + 1.5CO_2$) from 0.58 upstream of injection to about 2.14 downstream, a value within the usual operating range of 2.0 to 2.4.[26,27] The slight hydrogen excess is provided to accommodate side reactions and purge gas losses. The net effect would be to halve the coal requirement per unit of production (i.e., to double the yield to 10.5 bbl methanol per ton of coal) and to eliminate the need for an air separation plant and shift converter. The overall energy conversion efficiency, however, would be about 40%, or 10 to 20 percentage points lower than that expected for a plant using coal-derived synthesis gas (especially if second-generation pressurized Koppers-Totzek or Texaco partial-oxidation gasifiers were used).[28] In addition, as illustrated by Table 14, recent cost estimates for hydrogen from coal have ranged from about \$2 to \$3 per 10^6 Btu, whereas hydrogen from water, via either potential water-splitting approaches or electrolysis, will probably cost \$5 to \$10 per 10^6 Btu.

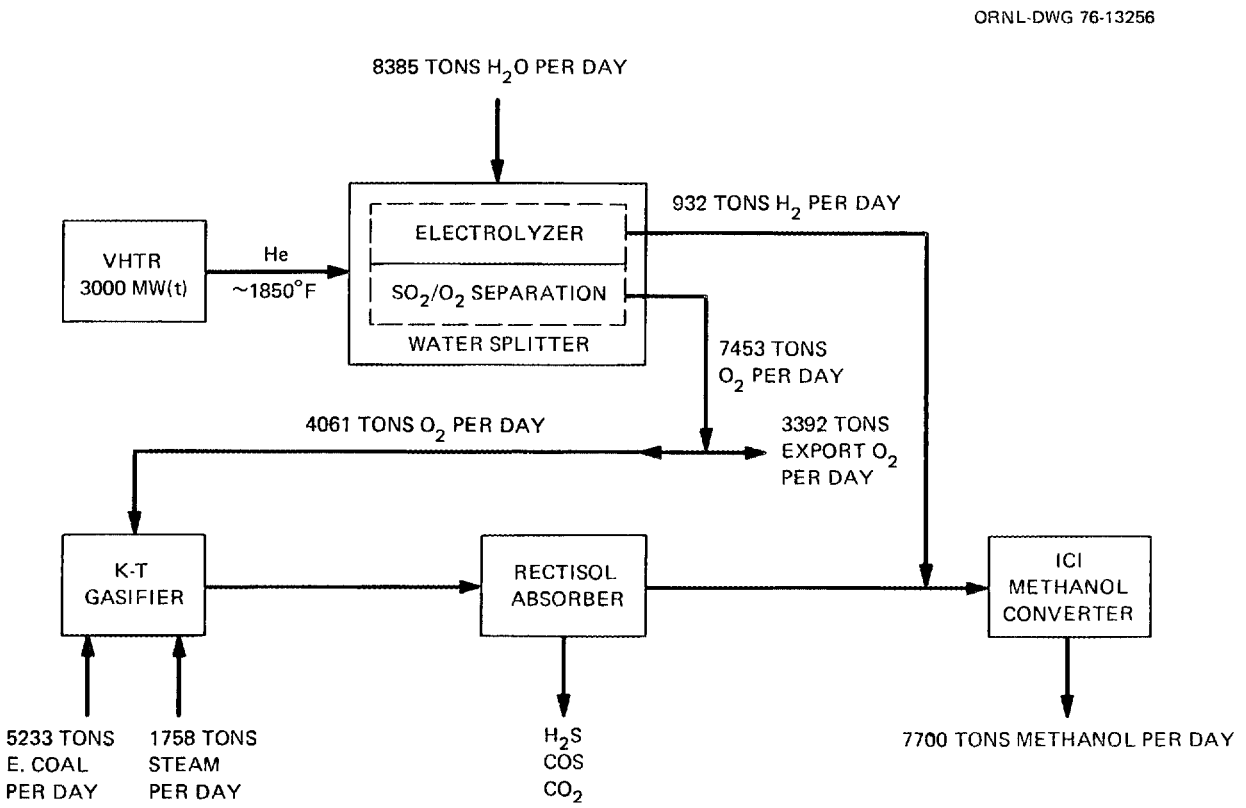

Fig. 6. Methanol production from coal using external hydrogen.

A calculation of the flows in an H-Coal plant producing syncrude was also made, based on the existence of the same thermochemical hydrogen unit assumed previously. Using a net yield of C_4 + liquid of 2.3 bbl/ton of dry coal as a basis, a coal heating value of 20 x 10^6 Btu/ton, a hydrogen consumption of 7080 scf/bbl of C_4 + liquid, and all hydrogen produced used in the process, the net effect would be to increase the syncrude yield by 54%.[29] Essentially all the oxygen would be available for export since process use is negligible. No coal would be used to make hydrogen (about 35% of the total coal feed normally would be required for this case), but the cost of hydrogen from water would again be about triple that from coal. In addition, the overall energy conversion efficiency would decrease from 66.3% to 54.6% (a decrement of about 12 percentage points). Using a higher and more probable hydrogen consumption of 8000 scf/bbl of C_4 + liquid (18,400 scf H_2/ton of dry coal) to produce a light syncrude, the results are the same with the exception that the energy conversion efficiency would decline from 63.4% to 41.6% (a decrement of about 22 percentage points). The comparison clearly indicates that a heavy fuel oil product, requiring about 4000

Table 14. Some recent cost estimates for hydrogen production

Process	GA/S&W (coal)	K-T (coal)	U-Gas (coal)	Westinghouse water splitting[a]	Existing water electrolysis[b]	Advanced water electrolysis[c]
Output, 10^9 Btu/hr	15.6[d]	17.0	10.4	4.8	2.0	3.5
H_2 purity, mole %	88	97.5	94.3	99.9	99.9	99.9
Approximate delivery pressure, psia	1000	1000	1000	1000	1000	1000
Efficiency, %	64	55	66	45	25	43
Capital cost,[e] $\$10^6$	1466	1180	540	1178	935	806
Production cost, $\$/10^6$ Btu	2.33-4.95[f]	2.34-5.40[f]	2.17-3.00[g]	5.17-8.80[f]	9.88[h]	5.07[h]
Source reference	1	1	2	1	3	3

[a] Driven by a 3000-MW(t) VHTR; core-exit helium temperature = 1850°F.

[b] With an available 3000-MW(t) PWR (600°F core-exit water temperature), rectified ac current, and Lurgi electrolyzers.

[c] Anticipated 1985 technology. A VHTR [3000 MW(t)] with a core-exit helium temperature of 1800°F, a binary cycle (He/NH_3), acyclic dc generators, and high-pressure solid-polymer electrolyte (SPE) electrolyzer technology. No intermediate heat-exchange loop.

[d] Output — 18.3 including liquid fuel production.

[e] Amounts in columns 1 through 4 are in mid-1974 dollars; those in columns 5 and 6 are in mid-1975 dollars.

[f] For range, where applicable, of coal at \$0.50 to \$1.75 per 10^6 Btu, nuclear fuel at \$0.25 to \$0.60 per 10^6 Btu, and fixed-charge rate (FCR) at 15% and 25% of total fixed investment.

[g] Range for coal at \$0.30 to \$0.80 per 10^6 Btu and with a 16% DCF (discounted cash flow) rate of return.

[h] Base case; nuclear fuel at \$0.25 per 10^6 Btu, utility financing (15% FCR), and 80% facility capacity factor.

Sources:

1. J. J. Williams, D. S. Wiggins, and J. B. Newman, *Engineering Evaluation of Process Heat Applications for Very High Temperature Nuclear Reactors*, Report UE&C/ERDA-750630 (Rev.), Mar. 9, 1976.
2. J. C. Gillis et al., *Survey of Hydrogen Production and Utilization Methods*, vol. 2, Institute of Gas Technology, August 1975, Sect. 5, pp. 82-107.
3. W. J. D. Escher et al., *A Preliminary Systems Engineering Study of an Advanced Nuclear-Electrolytic Hydrogen-Production Facility*, Institute of Gas Technology, December 1975.

scf H_2/bbl, would be relatively more attractive for the external hydrogen supply case. In any event, hydrogen from water will not be competitive with hydrogen from coal until coal prices increase to much higher levels.

The Institute of Gas Technology has independently investigated the use of external hydrogen in the conversion of coal to substitute natural gas (SNG), low-Btu gas (not amenable), methanol, and liquid hydrocarbons, and of oil shale to liquids and gases (not easily integrated with currently proposed retorting approaches).[30] A preliminary economic analysis was performed with costs based on constant 1973 dollars and a 12% discounted cash flow rate. It was estimated that for outside hydrogen at \$4.10 per 10^6 Btu, the break-even coal cost (beyond which external hydrogen is favored) is \$1.15 per 10^6 Btu for producing methanol, \$3.20 per 10^6 Btu for SNG production, and \$3.74 per 10^6 Btu for gasoline using the Consol Synthetic Fuel (CSF) process.[25] The corresponding product prices were calculated to be \$115 per ton for methanol \$0.38/gal, the late1975 sales price), \$6.52/Mscf for SNG, and \$54.52/bbl for gasoline (\$1.30/gal).

1.2.5 Advantages and disadvantages of nuclear coal conversion

The three reasons generally cited for developing this technology are (1) that it will save coal (reduce mining); (2) that a GCR/coal complex might produce less expensive products; and (3) that it could reduce the environmental impacts of coal-conversion plants. These points are addressed in the following sections.

1.2.5.1 Coal conversion

The country's proven (recoverable at current cost levels with current mining techniques) coal reserve of 434 x 10^9 tons (ref. 31) would last 680 years at the 1975 production rate if it could all be recovered. Assuming an overall recovery factor of 70% and a fourfold increase in mining rate to 2.55 x 10^9 tons per year, the reserve would last a little over a century. However, as coal rises in price, the amount that is economically recoverable will increase.

If one accepts the ORNL estimates of synthetic fuels production from coal, production increases from about 1.2 x 10^{15} Btu per year in 1985 to 15 x 10^{15} Btu per year in the year 2000. The VHTR share of this production, on a very optimistic basis, reaches 4.5 x 10^{15} Btu per year in the year 2000 after the lead plant is introduced about 1995. The amount of coal saved by using the VHTR (assuming the all-fossil plants use 1.3 times as much coal as the VHTR coal-conversion plants) would be 1.35 x 10^{15} Btu in the year 2000 or about 2.4% of the coal to be mined in that year.

Most current estimates of synthetic fuels production are below the ORNL estimates. For example, the following December 1975 energy projections of Dupree and Corsentino[32] show that if coal resources are to be "saved," the electric utility sector and the industrial sector are more attractive targets than the nascent synthetic fuels industry.

	Quad per year		
	1980	1985	2000
Coal energy for synfuels	0	0.52	8.14
Fossil fuels for electric utilities	19.35	23.40	26.40
Fossil fuels for industry[a]	22.30	22.80	25.28

[a]Excluding use of synfuels and electricity.

The use of the VHTR to conserve coal cannot have a significant impact until well into the 21st century. By that time, substitution of nuclear fuels for coal will be sound conservation practice if the breeder reactor is successful in extending the nuclear fuel resource base. Without the breeder, the desirability of working low-grade uranium resources will have to be weighed against the use of fossil resources.

1.2.5.2 Economics

The nuclear-coal hybrid systems (hydrogasification, solution hydrocracking, and steam gasification) appear to be feasible both technically and economically at the high end of the coal price range investigated — \$1.75 per 10^6 Btu. The all-fossil systems are economically better at coal prices of \$0.50 per 10^6 Btu. The difference in cost between nuclear and all-fossil systems is less than the uncertainty in the cost of either one.

It is very difficult to predict when the price of coal will escalate to the extent that nuclear energy will become the preferred source of steam and hydrogen for coal-conversion systems.

1.2.5.3 Environmental considerations

Projected SO_2, NO_x, particulate, and bulk solid-waste environmental loadings from plants using nuclear process heat can be five- to thirty-fold (usually two- to fivefold) below those of equivalent fossil-fueled plants. However, the pollutant outputs of the latter can apparently be held well below current EPA power plant standards. The nuclear variant, of course, produces radwastes which are unassociated with fossil-fueled plants. An evaluation of pollution and water consumption for selected coal-conversion processes was prepared by UE&C under subcontract to ORNL.[33]

The question that must be considered is whether very large coal-conversion plants will be acceptable to the public, when considering current EPA standards. The incremental (about fivefold) reduction in environmental pollution with the nuclear coal-conversion alternative could become attractive as more demanding environmental protection measures are required.

1.2.5.4 Institutional considerations

It is quite evident that commercialization of synthetic fuels production requires the solution of difficult institutional problems such as adequate industrial participation, venture capital, political and environmental opposition, and the threat of price competition from imported oil. Combining the above problems with the technological and licensing problems of nuclear reactors will create even greater commercial risks.

Very clear economic and environmental advantages will have to be demonstrated for nuclear coal conversion before it can be accepted by industry.

1.2.6 Conclusions and recommendations for nuclear coal conversion

The impact of VHTRs applied to coal conversion in the United States could not become significant until after the year 2000. Careful examination of all aspects is needed before any decisions are made regarding a major program on nuclear process heat for coal conversion.

Coal hydrogasification, coal solution hydrocracking, and steam coal gasification all appear to be potentially applicable to nuclear coal conversion. The use of the VHTR in steam reforming of light hydrocarbons to produce hydrogen for use in coal conversion is the most reasonable near-term coupling scheme. The indirectly heated steam-coal fluidized bed is a promising longer-range coupling scheme requiring more research and development (R&D). This scheme generally requires higher temperatures than reforming, or it requires catalyzed coal.

The use of the VHTR to produce hydrogen for coal conversion via thermochemical or electrolytic water splitting is not currently economically competitive with hydrogen derived from coal. Because of coal's interaction with the other fuel sources and possible political and environmental constraints to its accelerated development, it is difficult to estimate when hydrogen via water splitting will be competitive. However, it is clear that this is an important future concept that requires development before carbonaceous fuels are in short supply.

Although the first VHTR plant could not reasonably be operated in the United States before 1995, the lead time for process development is such that R&D must start at a reasonable rate about 20 years before the start of operation and 10 years before the start of lead plant construction.

Three areas of R&D are recommended:

1. Development of processes for producing hydrogen and synthesis gas via nuclear-heated steam-light hydrocarbon reforming. Program tasks are expected to be (a) the definition of carbon feedstocks to the overall process; (b) the definition of commercial or near-commercial process elements; (c) the identification of missing process links; (d) laboratory- and pilot-plant scale R&D on needed process elements; (e) R&D relating to use of chars; (f) R&D relating to standards for the hydrocarbon feed to the reformer (e.g., maximum acceptable impurity levels from the corrosion point of view); (g) development of materials technology; and (h) development of an overall system concept.

2. Development of nuclear coal conversion processes for producing synthetic pipeline gas (SPG) and liquids. Program tasks are expected to include (a) the definition of appropriate commercial or near-commercial process elements; (b) the definition of missing process links; (c) R&D on steam-coal and steam-char indirectly heated processes; and (d) development of preferred overall system concepts for the production of liquids and SPG. Key objectives are to evolve simple coal-conversion systems, if possible; to minimize char production; and to find the proper choice of nuclear process heat temperature and process efficiency. A great deal of technology will be developed in Germany; it would be desirable to gain access to the results of that work.

3. Thermochemical water splitting. Water-splitting processes to provide external sources of hydrogen are expected ultimately to become so important that R&D is justified now. Recommended steps include (a) laboratory investigation of the kinetics of key process steps; (b) thermodynamic measurements; (c) thermodynamic analysis of alternative cycles to make best use of practical process steps; and (d) limited engineering-scale tests.

1.3 Nuclear Steelmaking

The most viable concept for applying nuclear energy to steelmaking combines two well-known processes: (1) direct reduction in a shaft furnace and (2) refining in an electric furnace.

Although direct reduction of iron ore is a fairly new process, it is well developed and is in commercial use in various parts of the world where low-cost natural gas is available. In this process, iron ore is reduced in the solid condition to a product known as sponge iron by a synthesis gas ($CO + H_2$) derived from steam reforming of natural gas. The reaction requires high-temperature heat. Nuclear energy could be used to provide the heat needed to produce synthesis gas for the direct reduction of iron ore. Electricity needed to refine the resulting sponge iron to steel in an electric-arc furnace may also be provided by nuclear energy, but the furnace would likely be at a remote site.

Production of steel by electric-arc furnaces is a long-established commercial technology. Almost all of that tonnage is made with scrap as the only ferrous charge, although a number of plants currently use at least some sponge iron in their charges. Sponge iron could be used for a large portion of that charge, if the cost of the sponge were competitive with scrap. Electric-arc refining uses about 650 kWhr/ton of steel.

Processes for direct reduction differ in certain details, but almost all of them use as a reductant a gas mixture of carbon monoxide and hydrogen at temperatures of 816° to 982°C (1500° to 1800°F). For the efficient reduction of iron ore, the $CO + H_2$ content of the reducing gas should be above 90%.

The American Iron and Steel Institute (AISI) has studied nuclear steelmaking[34-39] with syngas produced via steam reforming of natural gas and with syngas produced from coal via the GA/S&W process. A reformer exit temperature of 760°C (1400°F) was found to be acceptable, although

816° to 871°C (1500° to 1600°F) is preferred. Nuclear steelmaking was found by D. J. Blickwede, AISI, to be competitive with conventional blast furnace technology and with a coal gasification direct reduction process (metallurgical coal assumed at $55/ton and nonmetallurgical coal at $25/ton).[38]

United Engineers and Constructors, under contract with ORNL, also evaluated nuclear steelmaking.[40] An economic comparison was made for four alternatives for producing steel. These are as follows:

Case 1. Conventional coke oven/blast furnace/basic-oxygen furnace refining (Fig. 7).

Case 2. Conventional reforming of natural gas/direct reduction/electric-arc furnace refining (Fig. 8).

Case 3. General Atomic Stone and Webster synthesis gas feed/direct reduction/electric-arc furnace refining (Fig. 9).

Case 4. Koppers-Totzek synthesis gas feed/direct reduction/electric-arc furnace refining (Fig. 10).

Case 3 utilizes the VHTR in the production of synthesis gas via the GA/S&W process.

In this analysis the nuclear option (Case 3) appeared to be competitive with the conventional coke oven/blast furnace process (Case 1) and with the direct reduction process using synthesis gas from a Koppers-Totzek gasifier (Case 4). It was not competitive with synthesis gas from a conventional natural gas reformer using current rates for natural gas. However, the anticipated lifting of regulations on natural gas prices would result in a much more favorable cost comparison. The availability of natural gas for this application whether or not regulations on gas prices are lifted may be questionable because of limited supplies.

Size mismatch is a major problem in considering nuclear steelmaking. The electric-furnace capacity in the United States today is about 30 million tons/year. A single 3000-MW(t) VHTR dedicated to nuclear steelmaking would produce 14 million tons/year of sponge iron. It would be almost impossible to absorb so large a plant into the industry. Therefore, one is required to think of a VHTR producing synthesis gas for a number of applications (steelmaking, ammonia synthesis, coal conversion, and/or petroleum refining) at a single site. This appears to be an attractive approach, but it will undoubtedly be very difficult to organize a joint project with many participants.

The steel industry does not appear to require a large number of VHTR units, but it may be a very important customer. The Japanese have launched a major program in nuclear steelmaking, allocating about $26 million over a six-year period.[41] Nuclear steelmaking technology may be required to keep the U.S. steel industry competitive in the future.

ORNL-DWG 76-13250

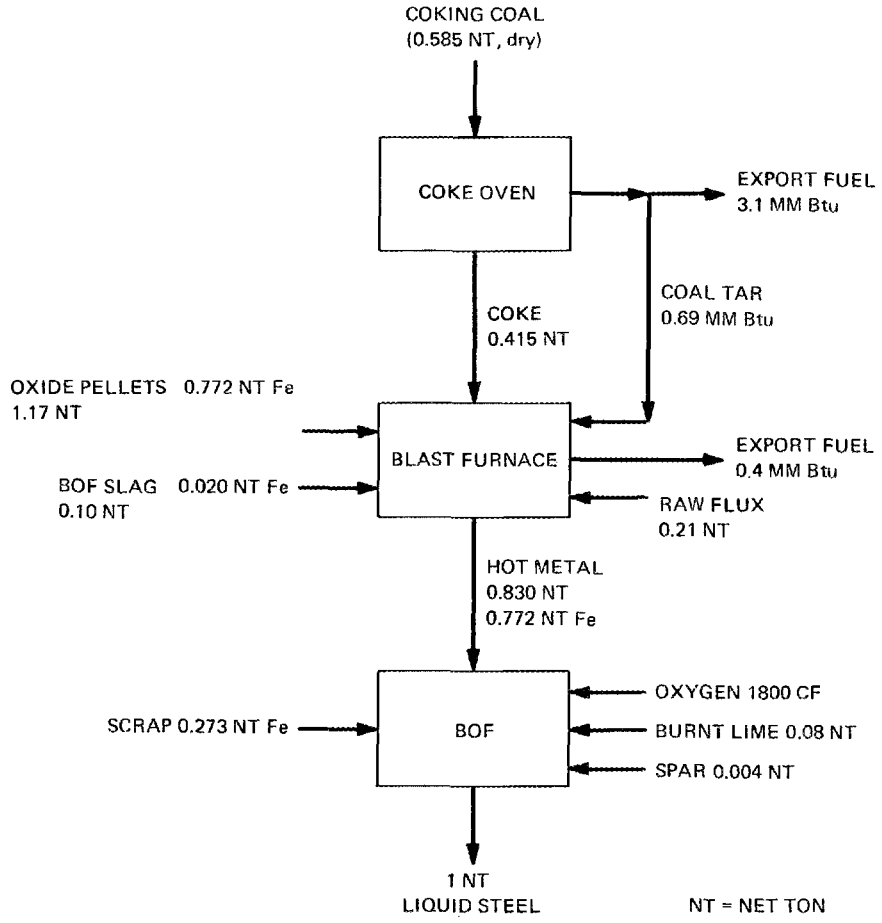

Fig. 7. Case 1 flowsheet for steel production by coke oven/blast furnace/basic-oxygen furnace (BOF) refining.

1.4 Petroleum Refinery

At the request of ORNL, the General Atomic Company conducted a study[42] to evaluate the use of the General Atomic high-temperature gas-cooled reactor (HTGR) as a heat source for petroleum refining and other petrochemical processes. The study investigated the technical and economic aspects of producing and transporting 1364 MW(t) energy to a refinery, the boundary of which was located 3500 ft from the reactor. The refinery heat load was made up of 398 MW of 371°C (700°F) steam and 966 MW of process heat having the capability of producing refinery process temperatures of 566°C (1050°F). The basic refinery heat balance used in the study was provided by Amoco Oil Company. Shell Oil Company supplied additional data on refinery heat loads, shutdown schedules, and hydrogen requirements. A schematic of a single-reactor configuration with fossil-fuel backup is shown in Fig. 11.

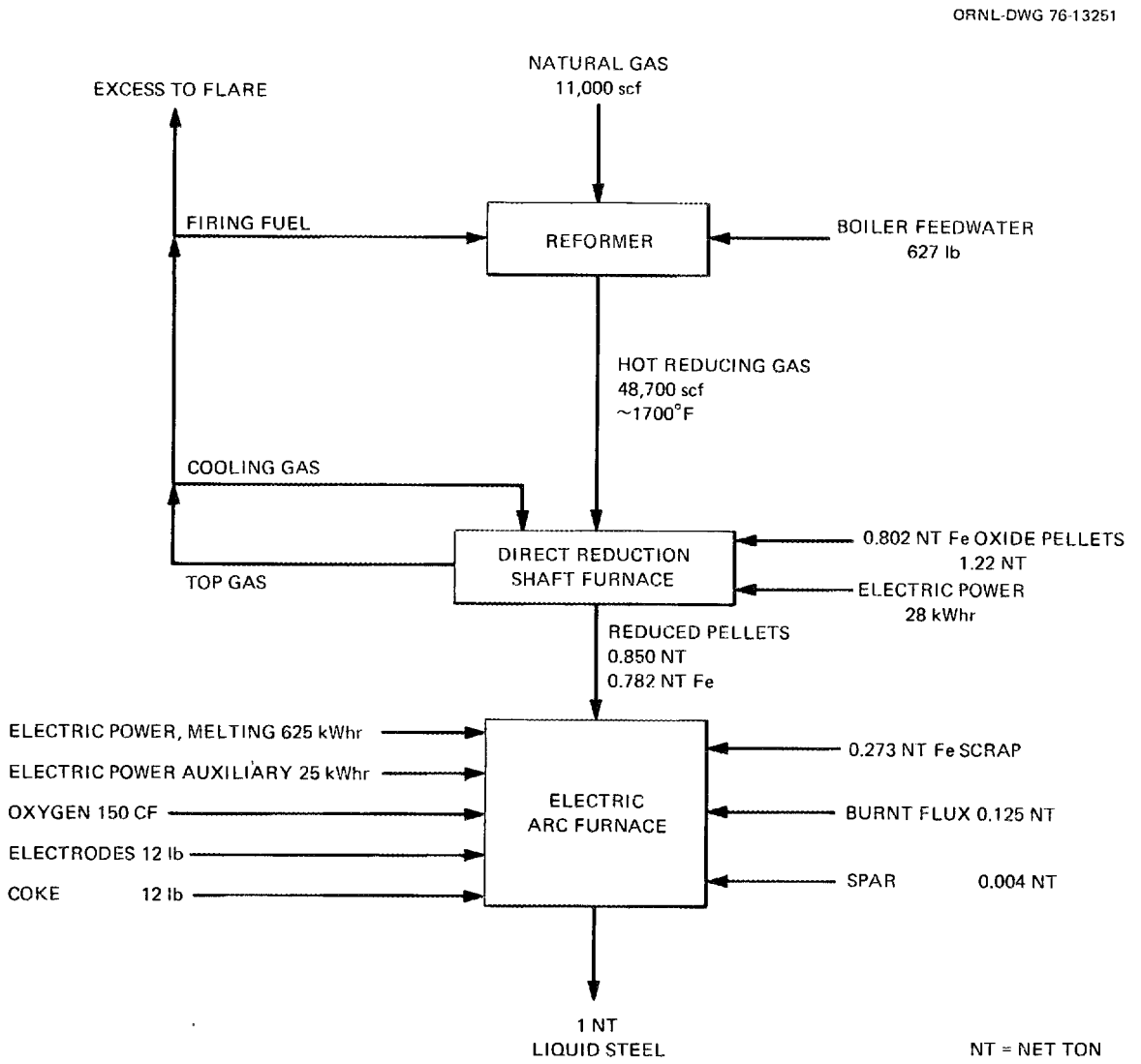

Fig. 8. Case 2 flowsheet for steel production by natural gas reformer/direct reduction/electric arc furnace (EAF) refining.

In the commercial steam-producing HTGR, the major reactor system components such as the reactor core, control-rod drive assemblies, helium circulators, steam generators, and core auxiliary cooling system are contained within a prestressed concrete reactor vessel (PCRV). For the heat transport study a 2000 MW(t) reactor was used. Two major modifications were made to the PCRV internals: (1) the steam generators were replaced by primary-to-secondary-helium heat exchangers; and (2) the number of primary reactor cooling loops was reduced from four to three.

The helium/helium heat exchangers located inside the PCRV are used to transfer heat from the primary reactor cooling loops to secondary or intermediate heat transfer loops. The reactor heat is then transferred to steam generators and to a fluid that transports heat to the refinery.

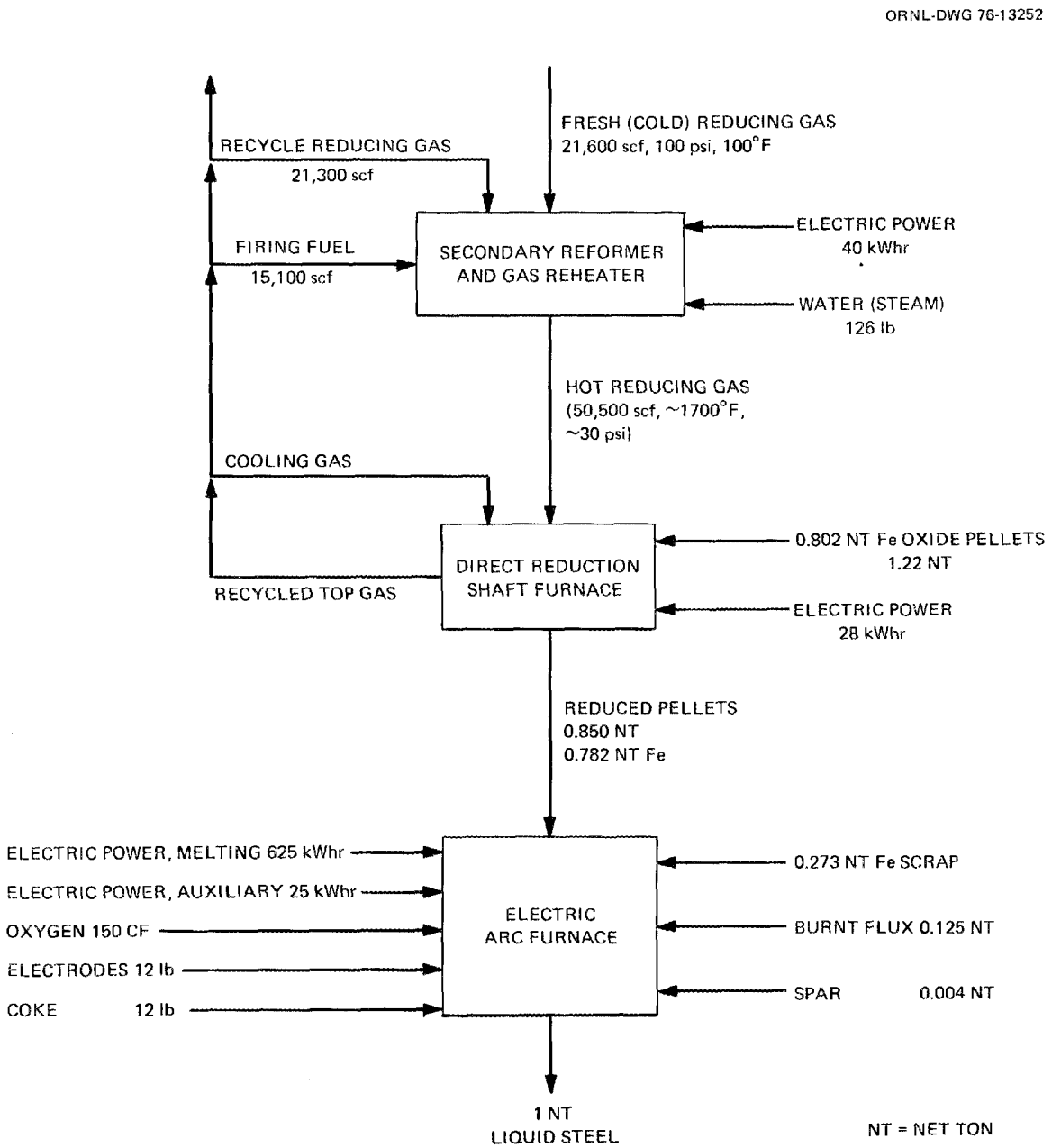

Fig. 9. Case 3 flowsheet for steel production by General Atomic VHTR/direct reduction/electric arc furnace (EAF) refining.

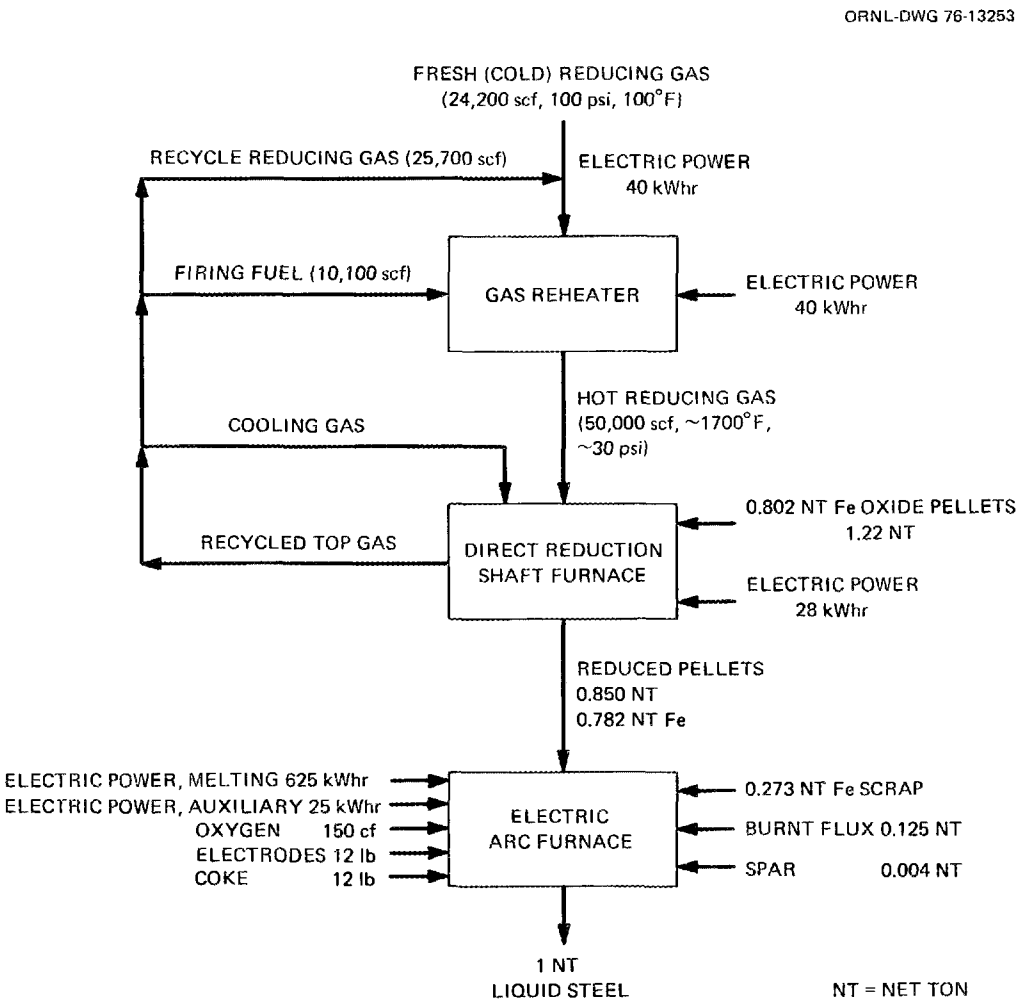

Fig. 10. Case 4 flowsheet for steel production by Koppers-Totzek/reformer/direct reduction/electric arc furnace (EAF) refining.

The selection of a heat transport fluid was carried out by evaluating a number of candidate fluids; sizing piping systems for refinery supply and return; establishing piping pressure drops, heat losses, and required pumping powers; establishing helium-to-heat-transport-fluid heat exchanger designs; and, finally, establishing cost estimates for each of the systems. Candidate heat transport fluids are listed in Table 15, along with a discussion of some advantages and disadvantages of each. Heat transport fluid piping data and costs are given in Tables 16-18.

A piping system that would supply the heat transport fluid to the refinery and return it to the process heat exchangers at the reactor was sized for the configuration using dual reactors with process steam generated at the refinery, and a cost estimate was established for each of the candidate heat transport fluids. The flow rate for a given fluid was determined from the refinery heat load (4656 x 10^6 Btu/hr) and the fluid enthalpy or specific heat at the 593°C (1100°F) refinery supply

Table 15. Candidate heat transfer fluids

Fluid	Advantages	Disadvantages
Helium	Chemically inactive; thermally stable; low viscosity; already used in primary and secondary coolant loops for HTGR.	Expensive.
Hydrogen	Thermally stable; good heat transfer properties; low viscosity; low pumping power; common fluid in refinery.	Explosive with air; may have adverse effects on steel at elevated temperatures.
Nitrogen	Cheap; inert.	Poor combination of heat transfer and flow properties; high pumping power.
Steam	Cheap; well-known fluid.	Corrosive.
Carbon dioxide	Cheap; used as reactor coolant; high-heat carrying capacity.	Corrosive in presence of water; poor heat transfer; high pumping power.
Heat transfer salt (HTS)	High specific heat per unit volume; high heat transfer coefficient; nonfouling; cheap.	High freezing point; relatively high viscosity; is at the limit of its thermal stability; no internal insulation possible.
Sodium potassium alloy (NaK)	Thermally stable; high specific heat per unit volume; excellent heat transfer properties; low viscosity, low freezing point, high boiling point; low vapor pressure.	Highly chemically active with air and water; no internal insulation possible; corrosive above 500°C (932°F).

temperature and the 329°C (625°F) refinery return temperature. Table 16 presents design data for the fluid piping systems.

A preliminary analysis was also performed to establish helium-to-heat-transport-fluid heat exchanger designs for each of the candidate fluids.

The heat exchanger heat load and log mean temperature difference were the same for all cases. The heat exchanger heat transfer area was, therefore, a function of the overall heat transfer coefficient. The helium (shell) side heat transfer coefficient is the same for all cases so that the heat transfer area is a function of the heat-transport-fluid heat transfer coefficient. The computed heat exchanger heat transfer areas are presented in Table 17. Sodium potassium alloy has the lowest heat transfer area because it has the highest heat transfer coefficient.

Table 18 presents heat transport loop cost for each of the candidate heat transport fluids. These data are based on a heat exchanger cost of $\$20/ft^2$ of heat transfer area.

The data in Table 18 show a significant cost advantage for HTS. Heat transfer salt, the selected fluid, is a eutectic mixture of potassium nitrate, sodium nitrite, and sodium nitrate. It is cheap, does not foul the heat exchangers, and has very good heat transfer characteristics. Also, because of its high density when compared with a gas, its heat transport capacity is much higher than for gases. For engineering purposes sufficient data are available. Disadvantages are its relatively high viscosity and its high freezing point, which will require steam tracing for startup and shutdown. For this application it will be used up to its thermal stability limit. Because internal insulation cannot be used, higher pipe temperatures will require more expensive pipe material.

Two basic approaches were investigated for providing a backup refinery source when the reactor is shut down. These were: (1) the use of a fossil fuel heater capable of supplying 67% of the refinery heat load and (2) the use of dual 2000-MW(t) reactors. The single reactor configuration was limited to the case where the refinery steam requirement was generated at the refinery site, whereas the dual reactor configuration considered generation of the refinery steam at both the reactor site and the refinery site.

A flow schematic of the single reactor configuration is shown in Fig. 11. The fossil fuel heater, which is a part of the heat transport loop, is located at the refinery site. The heater has the capacity of providing 67% of the refinery heat load, that is, 914 MW(t). When the reactor is operating, the fossil fuel heater is on-line at 25% of its design capacity, that is, 228.5 MW(t).

A flow schematic of the duel reactor with steam generated at the refinery is shown in Fig. 12. The configuration for one reactor only is shown. During normal operation, each reactor supplies 50% of the necessary energy to the heat transport loop. The reactor primary coolant and the secondary coolant loop conditions are the same as in the previously discussed case. The secondary loop helium, after being heated to 704°C (1300°F) in the primary-to-secondary helium heat exchanger, splits into two parallel streams with 50% of the flow going to the process heater and 50% to a secondary steam loop equipped with a

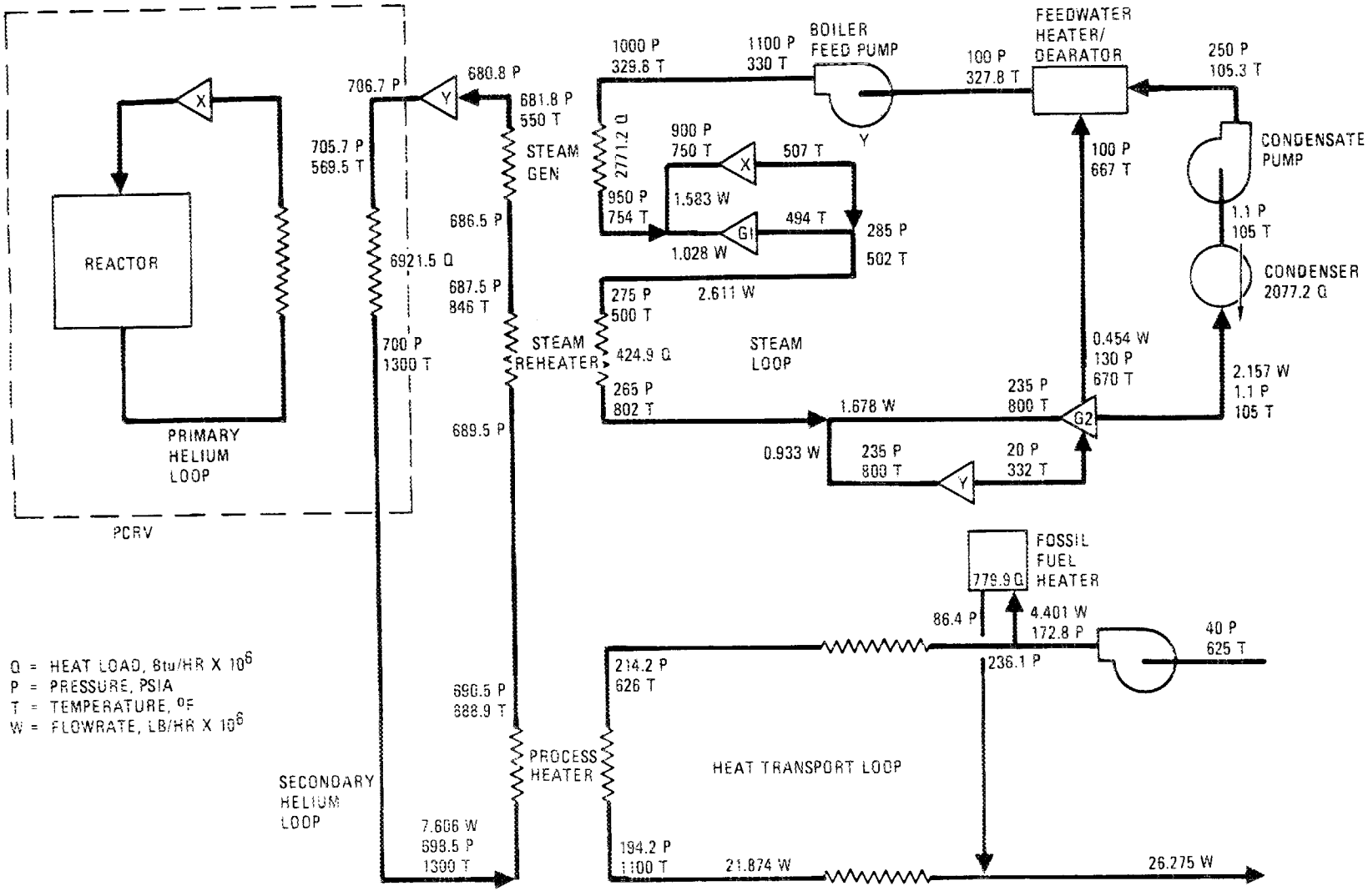

Fig. 11. Schematic of single-reactor configuration fossil-fuel backup.

Table 16. Heat transport fluid piping system data

Characteristics	Helium	Hydrogen	Nitrogen	Carbon Dioxide	Steam	HTS	NaK
Flow rate, 10^6 lb/hr	7.840	2.801	36.719	35.651	17.406	26.275	46.855
Inventory, lb	152,450	48,410	1,269,340	1,540,520	615,380	11,837,000	8,528,850
Supply pipe OD,[a,b] ft	10.07	7.862	11.75	11.23	8.758	3.747	4.746
Return pipe OD,[c] ft	9.85	7.199	11.22	10.85	8.299	3.788	4.533
Supply pipe velocity, fps	250	275	135	110	140	11.0	25
Return pipe velocity, fps	150	175	90	70	80	63	17.7
Pump or circulator inlet pressure, psia	622	721	533	438	723	40	40
Pump or circulator outlet pressure, psia	667	767	597	496	805	172	283
Pump or circulator power, MW(t)	108	65.2	122	79.8	71.5	1.93	146
Supply pipe wall thickness, in.	2.58	2.30	2.71	2.15	2.70	0.318	0.648
Return pipe wall thickness, in.	2.38	2.00	2.37	1.89	2.34	0.200	0.201
Piping heat loss, 10^6 Btu/hr	39.6	30.3	46.1	44.4	34.0	10.3	13.4

[a]For gases: internal insulation thickness, 6 in.; external, 2 in.

[b]For liquids: external insulation thickness, 6 in.

[c]All cases: outer insulation thickness, 2 in.

Table 17. Process heat exchanger heat transfer areas (ft^2)

Helium	H_2	N_2	CO_2	H_2O	HTS	NaK
226,180	206,900	280,370	276,460	274,000	180,000	128,100

reheater-steam generator combination. This secondary steam loop generates 284 MW(e) of power.

The two 50% streams then recombine and flow to a reheater-steam generator combination in the primary steam loop. The primary steam loop provides the power to drive the primary and secondary helium circulators (marked "X" and "Y," respectively, in Fig. 12) and to supply additional 117 MW(e) of power.

A flow schematic for the dual reactor configuration with steam generated at the reactor is shown in Fig. 13. With two exceptions, this cycle is identical to the dual reactor configuration with steam generated at the refinery: (1) a refinery steam loop is added; and (2) the steam supply for the feedwater heater in the secondary steam loop is extracted from the primary steam loop power turbine.

The reactor cooling loop is identical for the three cycle configurations. The 2000-MW(t) reactor core is cooled by three helium loops. Each loop has a steam-turbine-driven helium circulator. Reactor heat is transferred from the primary helium loops to the secondary helium loops by three single-pass heat exchangers. The reactor core, along with the primary cooling loops, the primary circulators, and the helium/helium heat exchangers are located inside a PCRV. With the exception of the helium/helium heat exchangers, the design of the primary cooling loops is similar to those of the HTGR steam plant. Figure 14 is a schematic of the primary cooling loop. The flow rates, heat loads, and circulator powers shown are the totals for three loops.

An economic evaluation of the three cycle configurations was made by developing and comparing the total annual costs of each configuration. Capital costs for both the nuclear steam supply (NSS) and balance of plant (BOP) systems were developed. The BOP costs included the reactor-to-refinery heat transport system. All cost data were escalated to July 1, 1974. Table 19 presents an overall cost summary for the three cases.

The costs for the refinery process heat systems were further analyzed to determine the value of energy at various points in the process. The results of this analysis are shown in schematic form in Fig. 15 for the single reactor configuration and in Fig. 16 for the dual reactor configuration with steam generated at the refinery. This analysis was performed for a fixed change rate (FCR) of 15%, an electric power selling price of 15 mils/kWhr, a fuel oil cost of $\$2/10^6$ Btu, and a nuclear fuel cost of $\$0.42/10^6$ Btu.

Results for the single reactor configuration indicate that the refinery heat from the nuclear plant alone has a value of $\$1.57/10^6$ Btu, of which the nuclear reactor and fuel account for $\$1.30/10^6$ Btu; intermediate heat transport equipment accounts for the balance. The value

Table 18. Heat transport fluid piping system cost data ($ x 10^6)

Item	Helium	Hydrogen	Nitrogen	Carbon Dioxide	Steam	HTS	NaK
Supply piping	55.379	39.496	67.386	55.985	48.973	6.053	14.415
Return piping (including insulation)	28.883	18.044	32.939	26.180	23.908	2.152	2.607
Pumps or circulators	21.663	13.115	24.476	16.041	14.388	0.387	2.945
Inventory	0.865	0.047	0.027		0.004	1.776	13.646
Heat loss	2.311	1.773	2.693	2.595	1.983	0.601	0.783
Unrecovered pump or circulator power loss	2.146	1.299	2.425	1.589	1.425	0.038	0.291
Total piping system cost	111.247	73.774	129.946	102.390	90.681	11.007	34.687
Heat exchanger cost ($20/ft^2)	4.523	4.138	5.607	5.529	5.480	3.600	2.562
Total heat transport loop cost	115.8	77.9	135.6	107.9	96.2	14.6	37.2

ORNL-DWG 76-20623

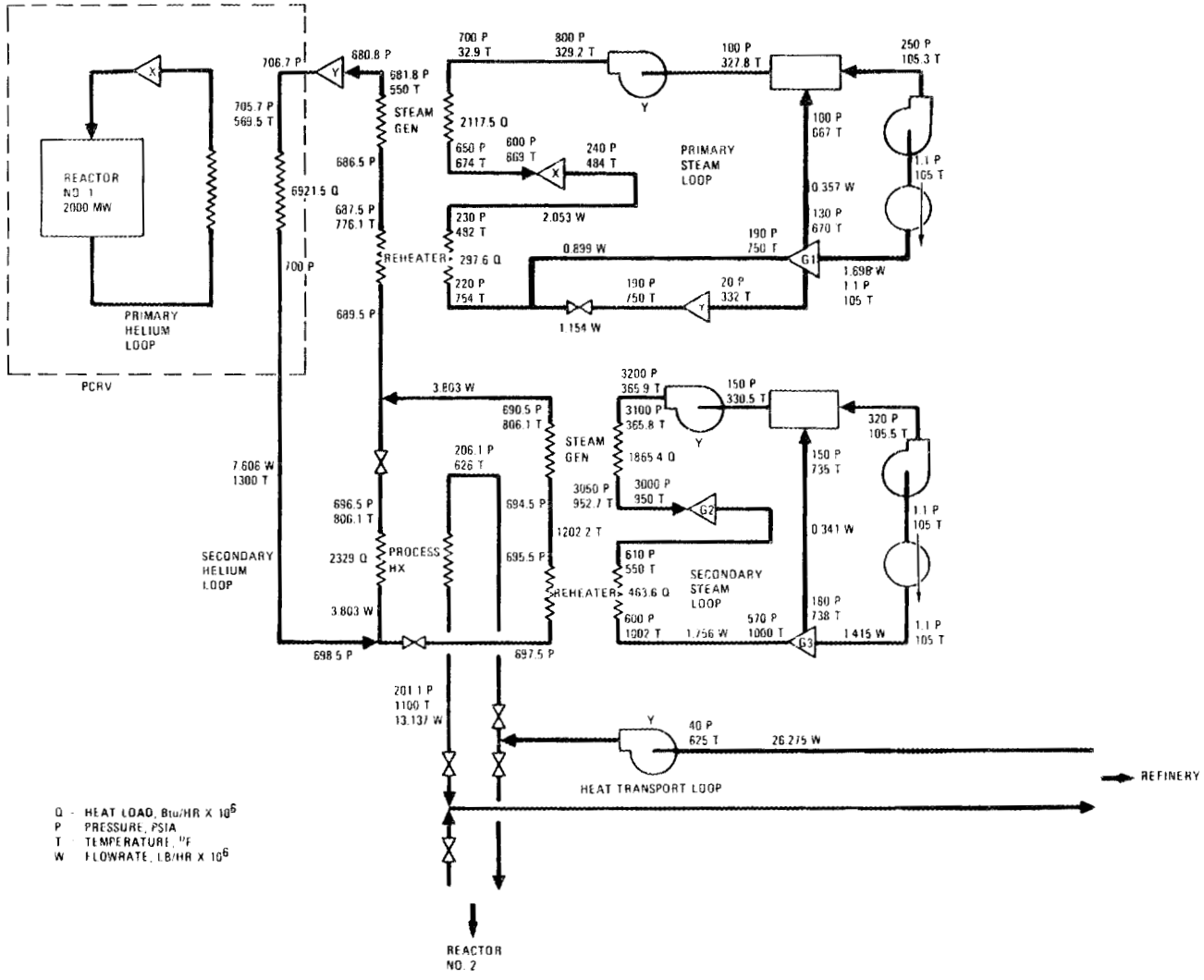

Fig. 12. Flow schematic of dual reactor configuration with steam generated at refinery.

of heat from the fossil heater is $4.55/10^6 Btu, or nearly three times the cost of the nuclear heat. After accounting for heater efficiency, fossil fuel costs contribute $3.29/10^6 Btu. The high cost of fossil heat adds $0.67/10^6 Btu to the refinery heat cost. The cost of producing electric power is not entirely recovered, and applying this loss to the cost of refinery heat adds an additional $0.21/10^6 Btu. Electric power would sell on a break-even basis at about 20 mils/kWhr.

Results for the dual reactor configuration show that the value of the refinery heat is slightly less than that for the single reactor

ORNL-DWG 76-20624

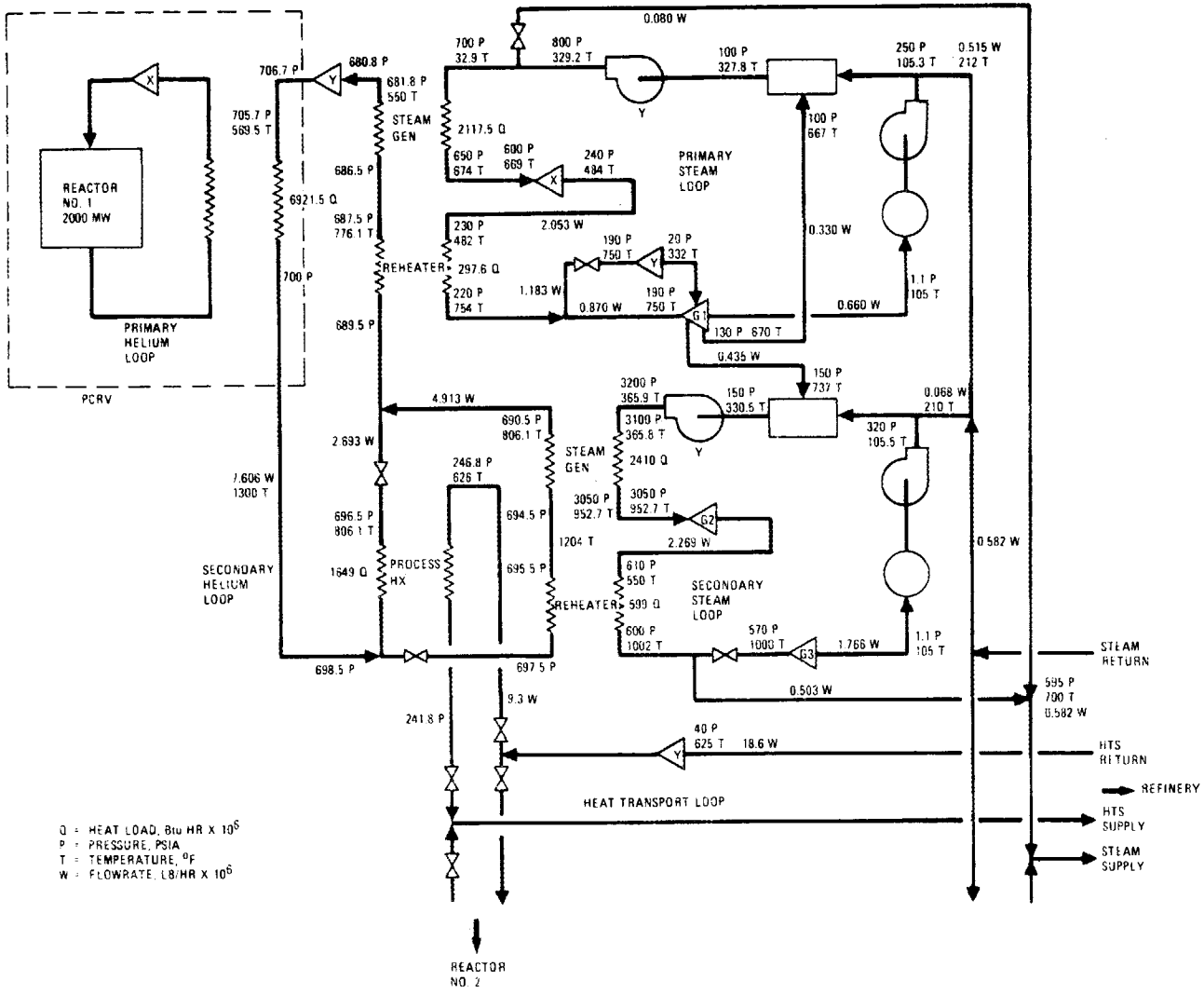

Fig. 13. Schematic of dual reactor configuration with steam generated at the reactor.

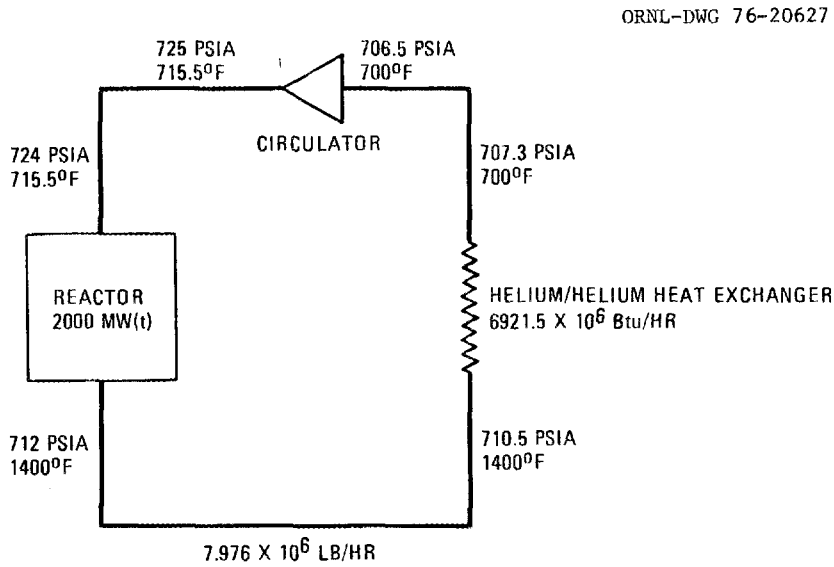

Fig. 14. Schematic of reactor cooling circuit (typical of all cycles).

configuration, owing principally to economies of scale. However, the cost of producing electric power is not fully recovered, and applying this loss to the refinery heat cost adds $0.48/10^6 Btu. Electric power would sell on a break-even basis at about 18 mils/kWhr.

Results clearly show that providing a backup heat source to meet 100% availability requirements for a refinery significantly increases the refinery heat cost. Considerable attention should be given to alternative configurations that could reduce the costs associated with backup systems or increase the revenue from the sale of electric power. The use of heat storage for either emergency refinery heat supply or supplying electric power for peaking are two attractive possibilities. Pursuing alternative schemes in this area appears to be one of the most promising approaches to reducing the refinery heat cost while maintaining the high reliability required for refinery process heat systems.

1.5 Oil Shale and Tar Sands

An evaluation of the application of the VHTR to oil shale and tar sands recovery and processing has been completed by the Resource Analysis and Management Group (RAMG) under contract with ORNL.[43]

Tar sand is sand saturated with highly viscous hydrocarbons. The highly viscous hydrocarbon is not recoverable from its natural state by conventional oil production methods. Mining or in situ recovery with some new form of processing must be used to produce the tar sand hydrocarbon resource.

Table 19. Overall cost summary

Configuration	Single reactor[a] with fossil fuel heater	Dual reactors, steam at refinery	Dual reactors, steam at reactor
Capital costs ($)			
NSS	105,072,000	202,335,000	202,335,000
BOP	284,100,500	472,239,200	478,533,400
Interest during construction (17% total)	66,159,100	114,677,600	115,747,700
Total	455,331,600	789,251,800	796,616,100
Annual costs ($/year)			
Capital at 15% FCR	68,299,700	118,387,800	119,492,400
Capital at 25% FCR	113,832,900	197,310,300	199,154,000
Operation and maintenance	2,757,000	4,583,000	4,583,000
Nuclear fuel at $0.42/$10^6$ Btu	22,607,400	45,214,800	45,214,800
Income from sale of electrical power at $0.15/kWhr	-25,854,500	-87,105,100	-91,288,100
Fossil fuel (oil) at $2/$10^6$ Btu	29,193,300		
Total at 0.15 FCR	97,002,900	81,080,500	78,002,100
Total at 0.25 FCR	142,536,100	160,003,000	157,663,700
Annual cost/10^6 Btu to refinery ($/$10^6$ Btu)			
0.15 FCR	2.45	1.99	1.91
0.25 FCR	3.60	3.92	3.86

[a]Nuclear plant capacity factor = 0.90; fossil fuel heater operates at 25% capacity during 90% of the year and at 100% capacity during 10% of the year.

ORNL-DWG 76-20626

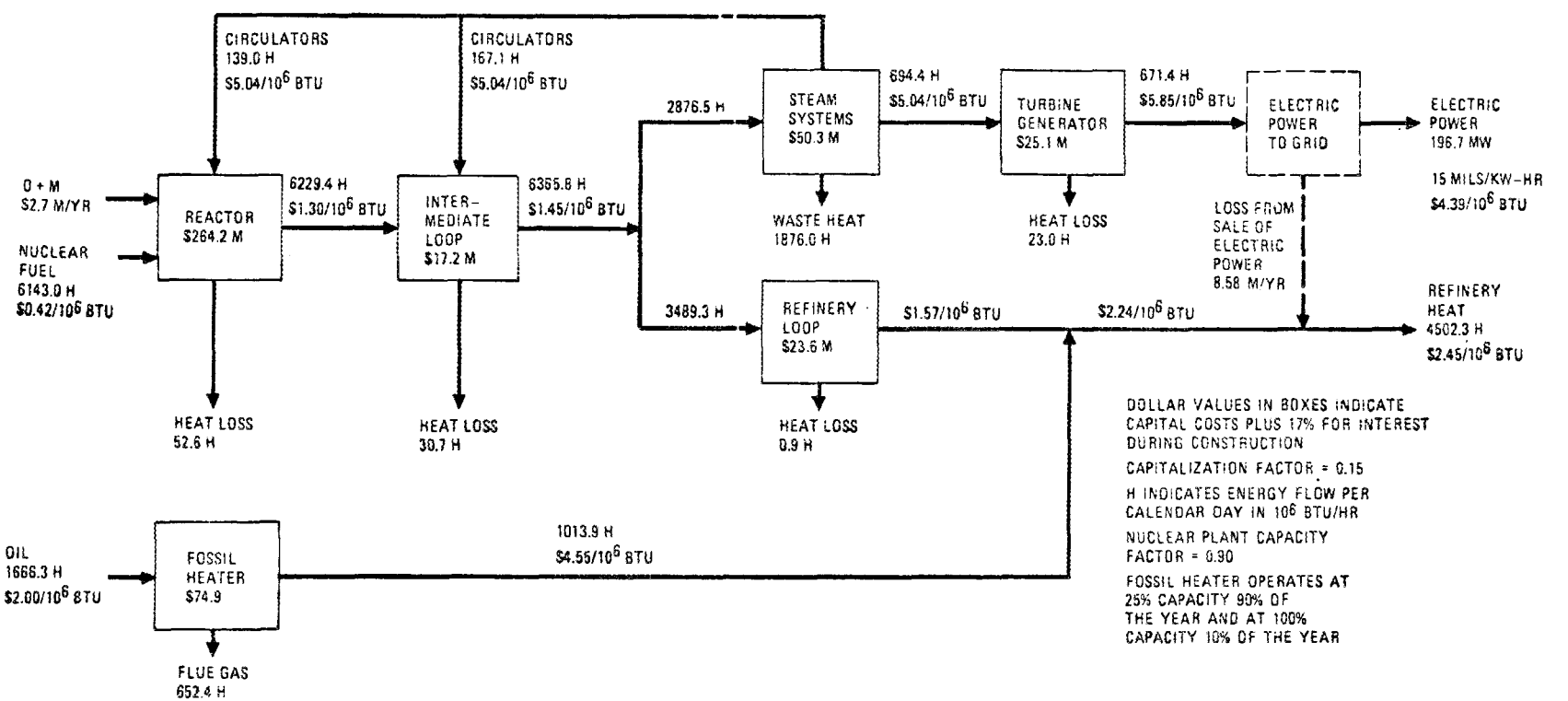

Fig. 15. Dollar flow through process heat plant — single reactor configuration.

ORNL-DWG 76-20625

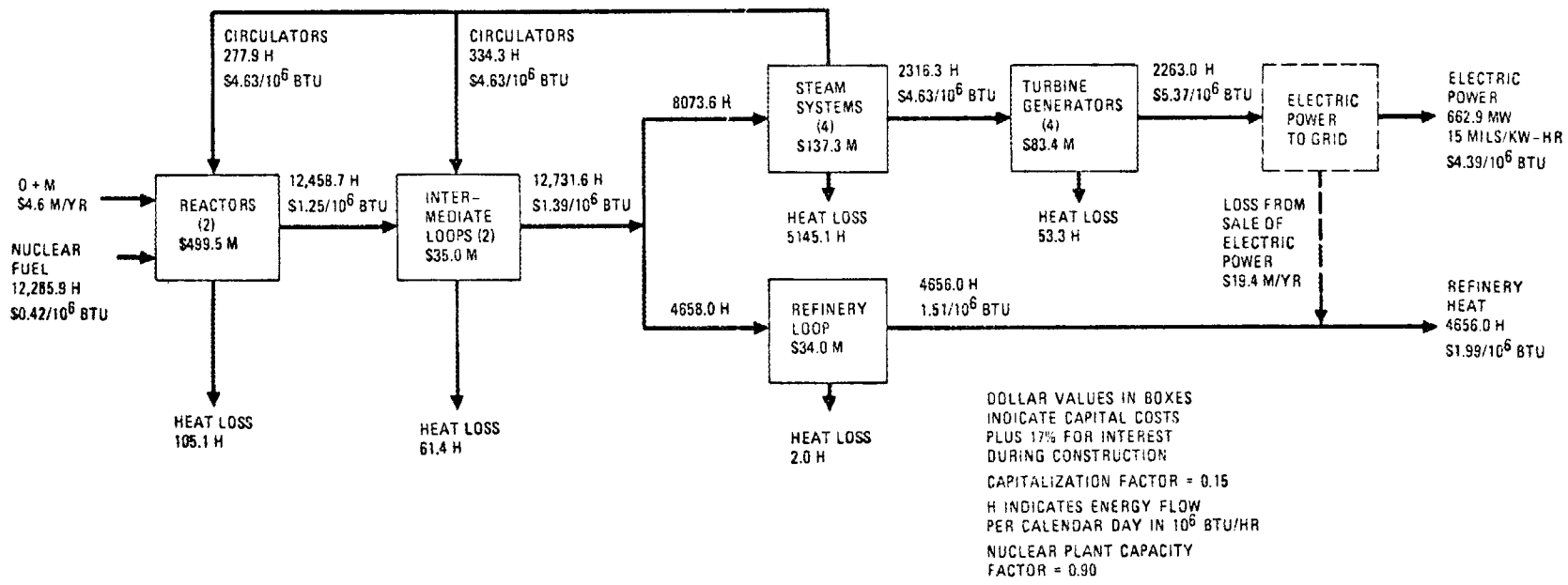

Fig. 16. Dollar flow through process heat plant, dual reactor configuration, with steam generated at refinery.

Major tar sand deposits are in Alberta, Canada (Athabasca, Cold Lake, Wabaska, Peace River, and Buffalo Head Hills), Venezuela (Orinoco Tar Belt), Colombia, and the United States. The locations of tar sand in sufficient quantities to supply at least one 100,000 bbl/day production facility for 30 years are shown in Table 20.

Table 20. Tar sand resources

Location	Resource base (billion bbl)
Western Hemisphere (exclusing U.S.)	
Athabasca Tar Sand, Canada	626
Cold Lake, Canada	165
Wabaska, Canada	53
Peace River, Canada	50
Buffalo Head Hills, Canada	1
Guanoco and Orinoco, Venezuela	600
Llanos, Colombia	1000
Total	2495
United States	
Tar Sand Triangle, Utah	10.0 to 18.1
P.R. Spring, Utah	3.7 to 3.8
Sunnyside, Utah	2.0 to 3.0
Others	3.0 to 3.8
Total	18.7 to 28.7

The application of VHTRs to tar sand recovery and processing does not seem especially promising since the domestic resource base is only about one-seventieth that of oil shale. Factors likely to deter significant production of syncrude from domestic tar sands include:

1. Reserves of domestic coal and oil shale are much larger, as are their oil yields.

2. The Utah sands are believed to be harder (more consolidated) and therefore more difficult to use than those of Alberta.

3. Average overburdens are thicker in Utah than in Alberta, which sharply limits large-scale surface mining and would require the successful development of in situ recovery methods usable on a commercial scale. However, estimated bitumen recovery efficiencies by in situ techniques such as steam-emulsion drive or "fire-flooding" are significantly lower than those for surface extraction.

4. Most of the Utah deposits underlie Federal lands and appropriate leasing arrangements would be necessary. In addition, public-use proposals have already been made for much of the subject surface area.

5. Water supplies may be insufficient for significant exploitation.

The role of syncrude from domestic tar sands in the future U.S. energy supply seems at best, a minor one.

The principal oil shale resources in the United States are located in the Green River Formation (Colorado), in Utah, Wyoming, and in Marine Shale deposits in Alaska. A summary of the oil shale resources is presented in Table 21.

Table 21. Shale oil resources

United States	Resource base (billion bbl)
Green River Formation, Colorado	1200
Marine Shale, Alaska	250
Shale associated with coal	50
Other shale deposits	500
Total	2000

Six different processing concepts were evaluated both with and without the use of the VHTR. The U.S. Bureau of Mines' gas combustion process, with its underground mining operations, was used for a relative comparison of the advantages and disadvantages of the use of a VHTR to process oil shale. The Great Canadian oil sands process was taken as a representative scheme to make a relative comparison with the VHTR modified process for aboveground conversion of tar sand bitumen to a syncrude. The Shell steam-injection in situ tar sand process was taken as a basis for comparison in the use of the VHTR for in situ recovery of tar sand bitumen. Where possible, the primary refining step used was the Hydrocarbon Research Incorporated H-Oil hydrogenation unit.

The evaluation of use of VHTR nuclear process heat for tar sand and oil shale recovery and upgrading indicated the following:

1. Processing plants are estimated to be built, at least initially, in parallel trains in size increments of 50,000 bbl/day.

2. No substantial capital or operating cost savings are projected for process plant sizes exceeding 100,000 barrels per calendar day.

3. The estimated plant capacity at a single site ranges from 100 to 150,000 barrels per calendar day.

4. The VHTR, if it is to be used as an energy source for tar sand and oil shale recovery and upgrading, should have a 90% availability.

5. Preliminary evaluations indicate that for oil shale recovery and processing, a VHTR with an output significantly less than 3000 MW(t) may be more attractive.

6. The 3000-MW(t) VHTR coupled with the 100,000 bbl/day tar sand recovery plant using in situ injection is the best match of the processes considered.

7. One or two in situ, 100,000 bbl/day tar sand recovery and upgrading operations could be powered by 3000-MW(t) VHTRs by the year 2000 in Canada and possibly in Venezuela. None are likely in the United States.

8. The estimate of oil shale plant capacity by the year 2000 is 300,000 to 500,000 bbl/day, which would lead to a projection of no more than one VHTR of 2000- to 3000-MW(t) size as a potential market.

9. Estimated benefits of nuclear process heat applications of a VHTR are a 24% to 50% better utilization of the in-place resource, with an attendant lessening of the environmental impact of resource production and about 20% lower water requirement.

The relative cost of oil shale recovery developed in the RAMG report[43] indicates that use of the VHTR would increase the cost of the syncrude in comparison with the fossil base process by about 20%. This appears to be primarily the result of an optimistic estimate of the cost of mining, processing, disposal, etc., which favors the conventional process.

On a more comparable basis, as developed in Table 22, the cost of syncrude from oil shale using a VHTR appears to be essentially competitive with the conventional process. Even so, the market potential in oil shale recovery and processing is not projected to be significant.

Table 22. Oil shale recovery

Item	Conventional process 100,000 barrels per calendar day	Conventional process with VHTR 254,000 barrels per calendar day
	Capital costs ($ x 10^6)	
Mine	60[a]	119[b]
Retorting and preparation	175[a]	380[b]
Refining	150[a]	300[b]
Facilities and utilities	120[a]	181[b]
Initial supplies	13[a]	27[b]
Subtotal	518	1007
Contingency 25%[c]	130	252
Subtotal	648	1259
Interest during construction[d] -- (0.166) 8% 4-year construction	108	209
Subtotal	756	1468
Startup costs	16[a]	30[b]
Working capital	64[a]	124[b]
Subtotal	836	1622
VHTR		800[d]
Total capital cost	836	2422
	Annual costs ($ x 10^6)	
Annual capital cost (15 to 25% FCR)	125 to 209	363 to 606
Annual operating costs		
Supplies	33[e]	66[f]
Labor	21[e]	42[f]
Fixed charges	28[e]	54[f]
Depletion	16[e]	41[f]
VHTR operation and maintenance		9[d]
VHTR fuel cycle ($0.40/$10^6$ Btu)		32[d]
Royalty	6[e]	17[f]
Subtotal	229 to 313	624 to 867
By-product credit	-15[e]	-61[f]
Total annual cost	214 to 298	563 to 806
	Product costs	
Total annual product (bbl)	32.85 x 10^6	83.44 x 10^6
Syncrude cost ($/bbl)	6.51 to 9.07	6.74 to 9.66

[a]Source reference, Table B-2.

[b]Source reference, Table B-4.

[c]Cost added.

[d]Revised from RAMG report (see source reference).

[e]Source reference, Table B-3.

[f]Source reference, Table B-5.

Source: Resource Analysis and Management Group, *An Evaluation of the Very High Temperature Reactor (VHTR) as an Energy Soruce for Tar Sand and Oil Shale Recovery and Processing*, prepared for Oak Ridge National Laboratory, June 1975, Oklahoma City.

2. ENERGY STORAGE, TRANSPORT, AND PEAKING POWER APPLICATIONS

2.1 Summary

2.1.1 Introduction

The nuclear reactor is a source of primary energy which has been restricted to the production of base-load electricity. In an effort to expand the nuclear reactor's contribution to the energy market, several systems have been investigated which allow nuclear energy to be transported directly or stored for intermediate load and peaking power.

If nuclear power is to capture a major portion of the energy market, then it must provide the user with a significant amount of thermal energy. Transportation of electricity for use as thermal energy is inherently a very inefficient means of energy transport. Therefore, to reduce this inefficiency, the energy should either be generated onsite, or an alternate system of transportation must be sought. Several investigators propose using the reversible steam-methane reaction in a chemical heat pipe as a transmission technique for nuclear process heat.[44,45] This system could attain an efficiency of 70% to 80% and be economically competitive with conventional electrical transmission.

Electric demand levels are normally separated into three broad areas: base load, intermediate load, and peak load. The base load is normally provided by the newer fossil-fuel, nuclear, and hydroelectric plants. Intermediate- and peak-load power demand are currently met (1) by generation in fossil-fueled (oil- and coal-fired) steam plants, (2) by hydropower or pumped storage, and (3) in gas turbines with high-quality, expensive fuels. Except for pumped storage, which is relatively inefficient and is limited to very few sites, there is no economic commercial system for use of nuclear energy to meet peak and/or intermediate electrical load. The combination of the VHTR and chemical or high-temperature thermal energy storage should lead to a competitive source of intermediate load and peaking power.

The power load of an electrical utility grid fluctuates by as much as a factor of 2 on a daily basis. Figure 17 presents a typical weekly load curve for a large midwestern utility.[46] The objective of the VHTR peaking power system is to meet the daily peak demand of the grid (or a portion of that demand).

2.1.2 Potential market

The Project Independence-MS[47] scenario, or ERDA "moderate/low" forecasts of electric power growth, has been chosen as a basis for estimating the potential market for VHTRs in the electric power industry. Results of our projection are given in Table 23. This table was developed according to the following reasoning: an ERDA report (ERDA-48) estimated HTGR penetration into the electric power market at about 3.9×10^{15} Btu/year by the year 2000.[48] This corresponds to roughly 10% of the nuclear base load. It was assumed that VHTR intermediate-load and peaking plants could capture about one-third of the market for GCRs

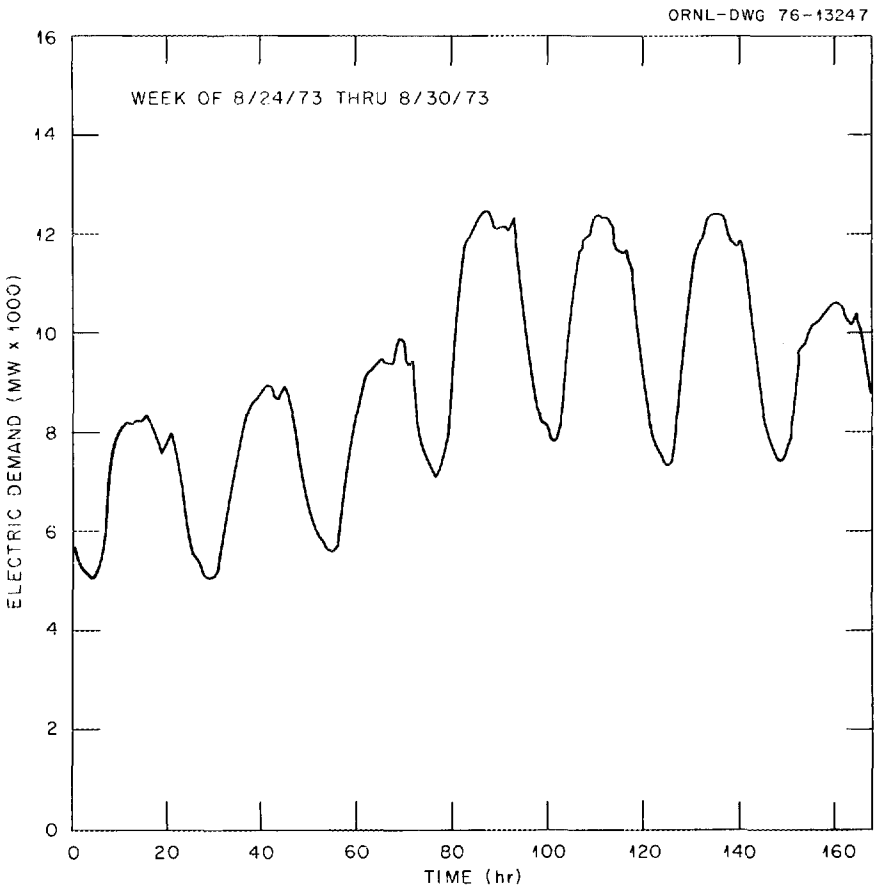

Fig. 17. Weekly load for large midwestern utility.

by the year 2000. Each intermediate-load plant was assumed (for this table) to have a nominal peak rating equal to the MW(t) rating of the nuclear island. The period 2000 to 2030 was extrapolated from the pre-2000 predictions.

The load curve, Fig. 17, implies that at least one-third of all generating capacity is dedicated to intermediate and peak load. Our market projections conservatively assume that only about 20% of the market is served by VHTR peaking plants in the year 2000.

2.1.3 Conclusions

Figures 18, 19, and 20 are cost comparisons of EVA-ADAM storage, HTS storage, and three conventional power systems — gas turbines and coal- and oil-fired steam systems. The economic cost basis for the three conventional systems is presented in Table 24.

Table 23. Potential penetration of HTGR, GT-HTGR, and VHTR intermediate-load and peaking plants into the electric utility market[a]

Year	Total electrical capacity [GW(e)]	Total nuclear capacity [GW(e)]	Total HTGR + GT-HTGR [GW(e)]	Equivalent number of 3000-MW(t) [1000 MW(e)] HTGR + GT-HTGR units	Number of intermediate-load and peaking VHTR 3000-MW(t) units	Total VHTR intermediate and peaking capacity [GW(e)]
1973	436	18.4	0	0	0	0
1985	800	185	0.3	0	0	0
1990	1040	340	5	5	1	3
1995	1350	545	30	30	5	15
2000	1750	800	80	80	27	80
2030	3500	2500	250	250	120	360

[a]HTGRs provide 10% of the base-load nuclear power. By the year 2000, one-third of the GCR power plant capacity is VHTR peaking plants. This represents only about 20% of the total peaking and intermediate-load capacity.

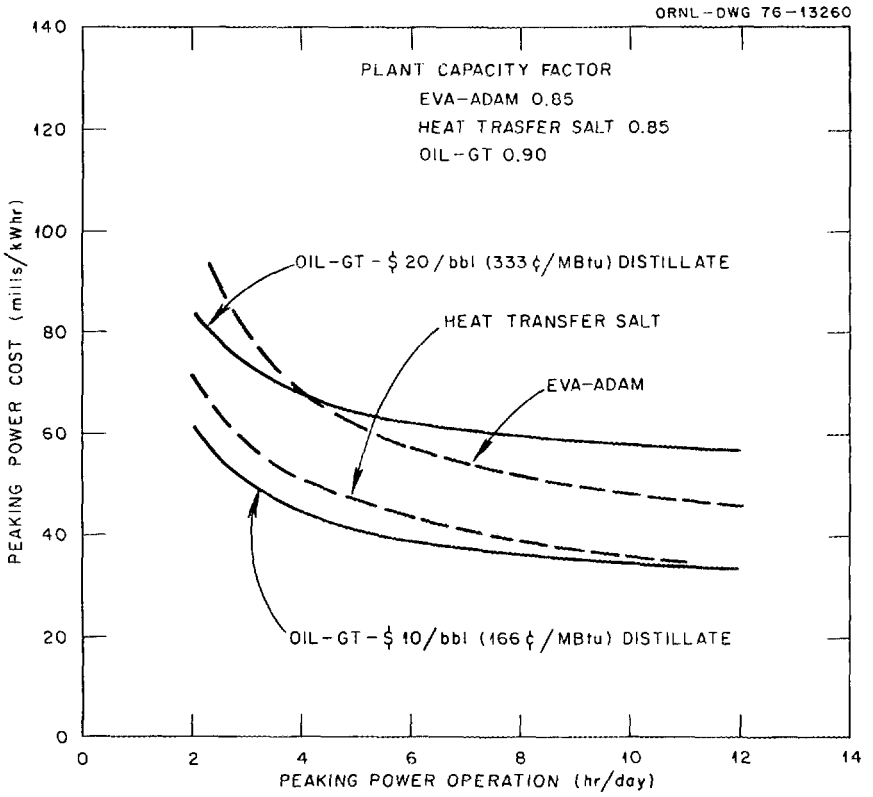

Fig. 18. Cost comparison between storage system and gas turbine power plants.

Although this is a preliminary analysis, it appears that the EVA-ADAM peaking system will be competitive only if fuel prices rise considerably above their current level. As can be seen in Fig. 18, the cost of a gas turbine system is not a strong function of the period of operation but is very sensitive to fuel costs. Compared to a gas turbine system, EVA-ADAM would be competitive at higher fuel prices only if it acted as an intermediate power producer used 6 to 12 hr/day. However, it can be inferred from Figs. 19 and 20 that in this range of operation, fossil-fired steam plants would be more economical even at higher fuel costs.

The HTS system appears to be a very attractive alternative to present gas turbine peaking systems. It can be seen in Fig. 18 that the HTS system is competitive with the gas turbine system even at the lower range of fuel prices. This system is more economical than EVA-ADAM because it has a lower capital investment per kilowatt of peaking power; but, as the EVA-ADAM system, it has a low operating cost, so it will become even more attractive as the price of fossil fuels rise. Because of its low operating costs, the HTS storage system has the additional advantage of being competitive with the steam cycles for production of intermediate-load power. Figures 19 and 20 show that this system is competitive with both the oil- and coal-fired systems at the lower fuel prices throughout the operating range.

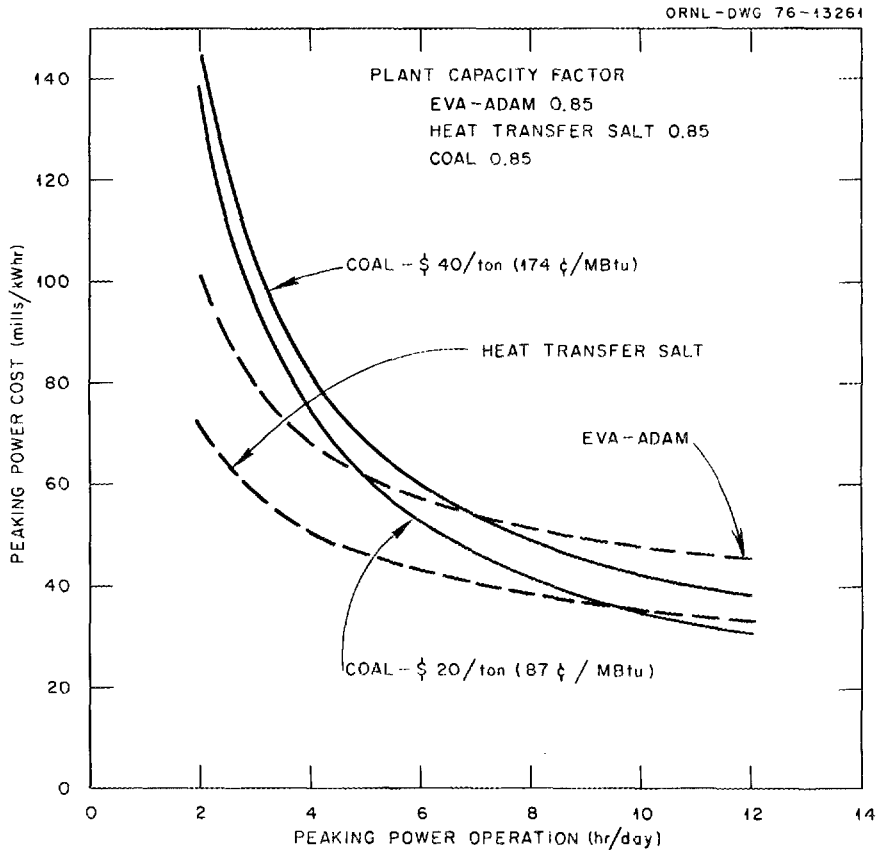

Fig. 19. Cost comparison between storage systems and coal-fired power plants.

The VHTR peaking power scheme would reduce the electric power industry's demand for high-quality fuels which have alternative uses for transportation and home heating and which provide a mechanism whereby nuclear energy could be effectively used to meet intermediate peak power demand.

In comparison with other nonfossil energy transportation systems in the production of process steam (Table 25 and Fig. 21), the EVA-ADAM transport system is competitive for intermediate distances (less than 300 miles). However, within the present price range of coal, EVA-ADAM is not competitive with the nuclear-fossil hybrid transport systems. It is clear that EVA-ADAM is a future concept that will not be a viable alternative until fossil-fuel prices rise substantially above their current level. However, in a carbon-poor economy, this system appears to be a good choice for intermediate-distance energy transport.

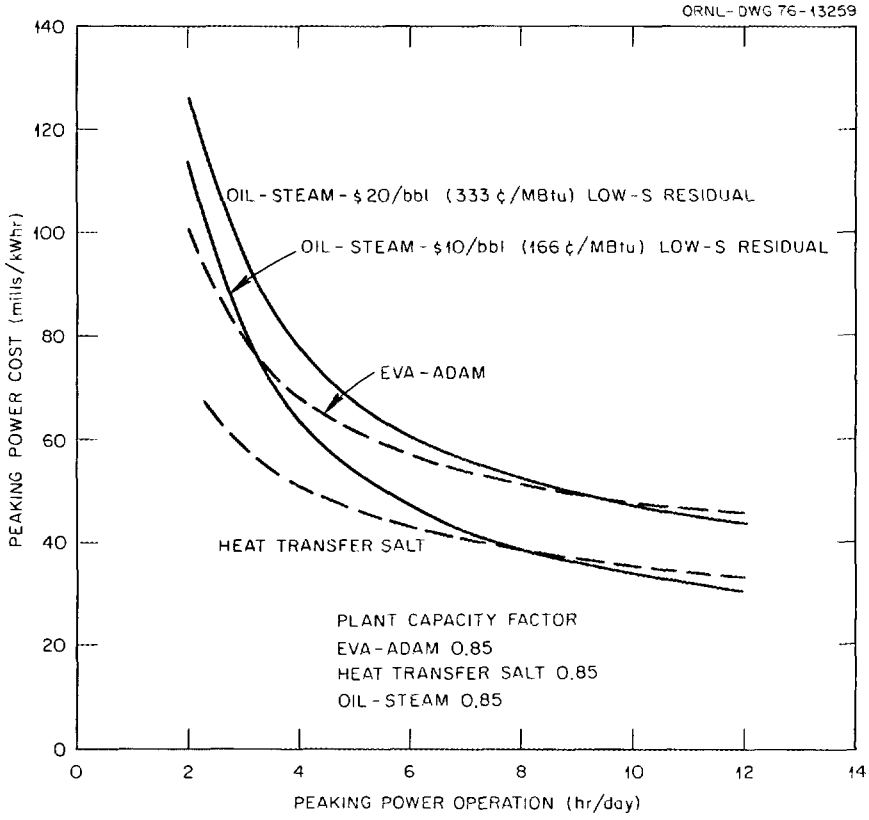

Fig. 20. Cost comparison between storage systems and oil-fired power plants.

2.2 EVA-ADAM

In recent years interest in new techniques for the storage and transmission of energy has increased substantially, primarily because of the higher cost of energy and the need for effective transmission and storage systems. Of the many storage and transmission techniques available, the reversible chemical reaction appears to be a plausible and attractive alternative and a mechanism by which nuclear power may provide long-distance energy for process and space heat; it is certainly applicable to VHTR development. There are many reactions that are adaptable to this type of system, and some of these are listed in Table 26.

The steam-methane reaction is one that is highly endothermic and displays the reversibility necessary for a chemical storage and transmission system. Steam-methane reforming is a common practice in the petrochemical industry, and the reverse methanation process has been in use for many years in the production of ammonia. Also, methanation is receiving substantial development effort for the production of pipeline gas from coal. Familiarity with this reaction makes it a practical

Table 24. Cost summary for conventional peaking and intermediate-load systems[a,b]
[basis: 1000 MW(e)]

Item	Coal-steam	Oil-steam	Oil-gas turbine
Total capital investment (10^6 \$)	485	372	140
Annual capital cost (FCR = 0.15) (10^6 \$/year)	72.8	55.8	21
Fuel use (100% plant capacity factor)	3.25×10^6 tons/year	11.89×10^6 bbl/year	20.53×10^6 bbl/year
Fuel cost (10^6 \$/year)	3.25 FC	11.89 FP	20.53 FG
Annual operating and maintenance cost			
Fixed (10^6 \$/year)	7.1	5.6	0.8
Variable (10^6 \$/year)	16 F	4.2 F	36 F
Total annual cost (10^6 \$/year)	(79.9 + 16 F + 3.25 FC)	(61.4 + 4.2 F + 11.89 FP)	(21.8 + 36 F + 20.5 FG)
Annual power produced (kWhr/year)	8.76×10^9 F	8.76×10^9 F	8.76×10^9 F
Unit cost (mills/kWhr)	9.12/F + 1.83 + 0.371 C	7.01/F + 0.478 + 1.36 P	2.49/F + 4.14 + 2.34 G

[a]Cost analysis for conventional peaking- and intermediate-load systems was provided by T. D. Anderson, Reactor Division, ORNL.

[b]Abbreviation key: F = plant capacity factor; C = \$/ton of coal; P = \$/bbl residual oil; G = \$/bbl distillate.

Table 25. Cost summary for transportation systems for process steam production

Cost item	GA/S&W H_2	GA/S&W CH_4	Westinghouse H_2	Electricity
Coal cost, $\$/10^6$ Btu	1.00	1.00		
Nuclear cost, $\$/10^6$ Btu	0.45	0.45	0.45	0.45
Production cost, $\$/10^6$ Btu	3.20[a]	2.58[a]	4.78 to 5.87[a]	5.80[b]
Transport cost, $\$/10^6$ Btu/100 mile	0.11[b]	0.033[c]	0.11[c]	0.47[d]
Steam conversion, $\$/10^6$ Btu	0.52[e]	0.31[e]	0.52[e]	0.09[e]
Boiler efficiency, %	85	85	85	100
Steam cost, $\$/10^6$ Btu	4.37 + 0.13/ 100 mile	3.40 + 0.04/ 100 mile	6.22 - 7.50 0.13/100 mile	5.89 + 0.47/ 100 mile

[a] J. J. Williams and J. B. Newman, *Engineering Evaluation of Process Heat Applications for Very High Temperature Nuclear Reactors*, UE&C-ERDA-750630 (Revised), United Engineers and Constructors, February 1976.

[b] J. G. Delene, personal communication with E. C. Fox, Oak Ridge National Laboratory, May 1976.

[c] F. Abidi, "Pipeline System Costs Estimated," *Oil Gas J.* 99 (October 13, 1975).

[d] A. J. Banks and R. B. Leemans, "Energy Transportation," presented at American Power Conference, April 20-22, 1976, Chicago, Illinois.

[e] T. D. Anderson et al., *An Assessment of Industrial Energy Options Based on Coal and Nuclear Systems*, ORNL-4995, Oak Ridge National Laboratory (July 1975).

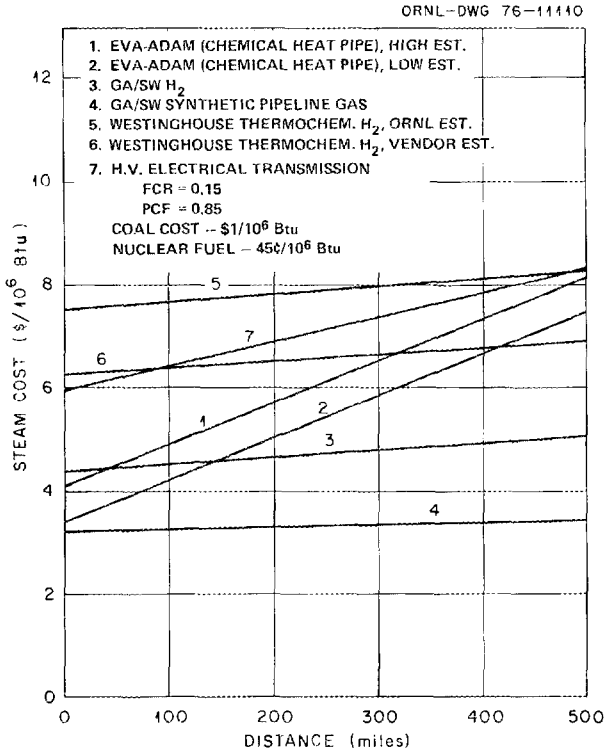

Fig. 21. Cost of chemical heat pipe and alternatives for the production of process steam.

choice and a prime candidate for an economic analysis of chemical energy storage and transmission techniques.

The nuclear steam-methane chemical heat pipe, commonly known as EVA-ADAM, was first developed in West Germany, at the Nuclear Research Facility in Jülich,[45] where significant research has been conducted with helium-heated steam-methane reformers. This system is based on the reversible steam-methane reaction:

$$CH_4 + H_2O\uparrow = CO + 3H_2 \ , \quad \Delta H = 49 \text{ kcal/mole} \ .$$

Additionally, a subsequent reversible reaction always takes place:

$$CO + H_2O\uparrow = CO_2 + H_2 \ , \quad \Delta H = 9.9 \text{ kcal/mole} \ .$$

This reaction is commonly known as the water-gas shift reaction. Conceptually, this system is based on using the heat of reaction as the transport mechanism. During the reforming step, 49 kcal are absorbed per gram-mole of methane reacted. The gas product is then stored or transported to a methanator where the heat is removed from the reverse reaction, which takes place at a lower temperature. The steam-methane reaction takes place over a nickel catalyst at temperatures of 700° to

Table 26. Closed-cycle chemical reactions

Reaction	Approximate heat of reaction @ 25°C(kcal/mole)	Temperature range (°C)
$CH_4 + H_2O = 3H_2 + CO$	49	425-1000
$CH_4 + CO_2 = 2CO + 2H_2$	59	425-1000
$CO + CL_2 = COCl_2$	27	250-750
$C_6H_6 + 3H_2 = C_6H_{12}$	50	250-450
$C_{10}H_8 + 6H_2 = C_{10}H_{18}$	75	175-425
$C_7H_8 + 3H_2 = C_7H_{24}$	51	175-425
$C_2H_4 + HCl = C_2H_5Cl$	13	150-500

900°C; the higher temperatures favor equilibrium and reaction rate. The reverse methanation reaction takes place over a nickel catalyst at temperatures of 350° to 450°C. Because the methanation reaction is exothermic, equilibrium is favored by lower temperatures. Commercially, both reactions take place at about 40 atm.

During both the methanation and reforming reactions, it is possible for the Bouduard reaction to take place, depositing carbon on the catalyst:

$$2CO \rightarrow CO_2 + C\downarrow \ .$$

This reaction will deactivate the catalyst and must be avoided in any commercial operation. A solution of the equilibrium relationships shows that at normal operating temperature this reaction will not take place if the feed steam-to-methane ratio in the reforming reactor is greater than 1:1 and if the H_2:CO ratio in the methanation reactor is greater than 3:1.[49]

The impetus for developing this system has been an interest in an economical and efficient means to transport energy over long distances. The transportation system concept is based on piping the reactant gas to a user location where the heat is removed through the methanation reaction and used to generate steam for electrical power or district heating. However, this analysis includes both the transportation system and an onsite energy storage and peaking power system.

Basically, the chemical storage peaking power system consists of three sections: (1) the base-load nuclear steam reformer, (2) a gas storage system, and (3) the peaking power methanation section. Figure 22 is a schematic of this system.

Initially, methane and steam are catalytically reacted in a helium-heated reformer. The product gas is then cooled; the water is condensed and removed. The dry synthesis gas is then sent to a high-pressure

ORNL-DWG 76-13245

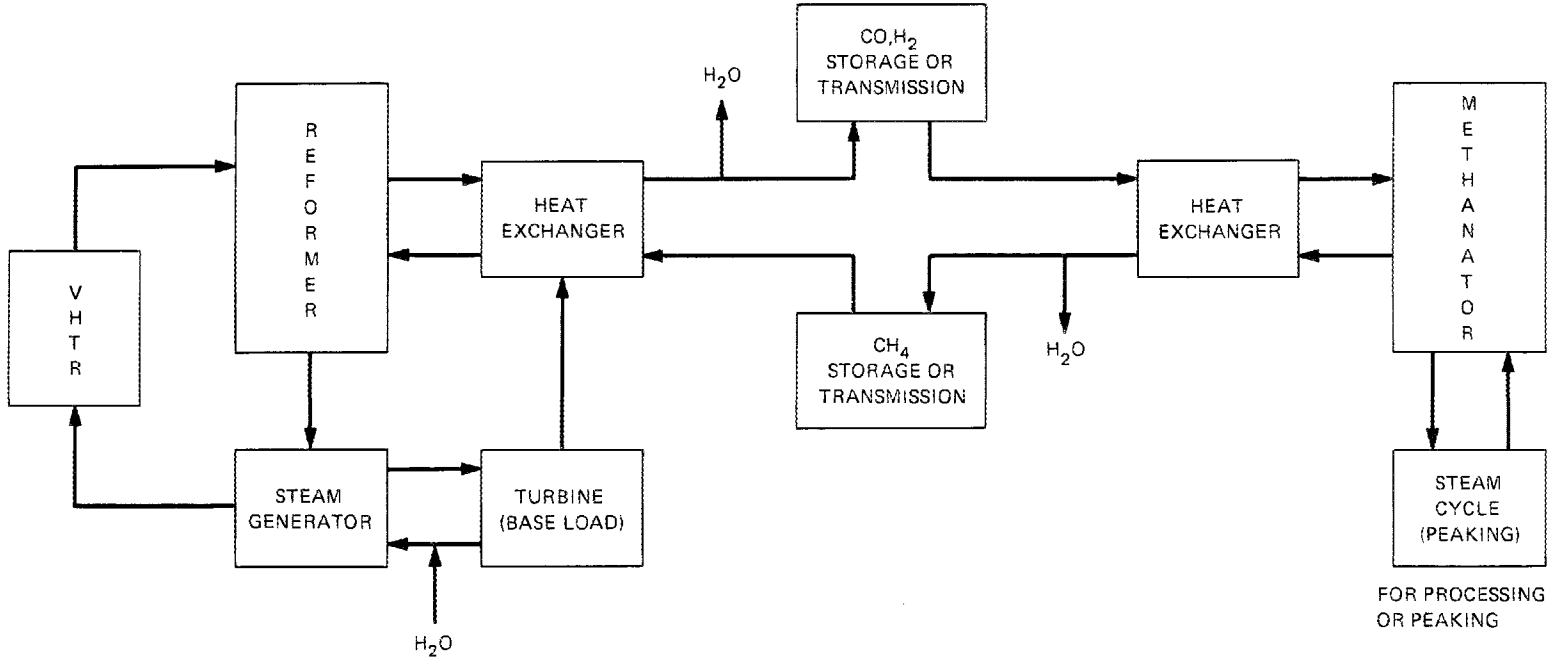

Fig. 22. EVA-ADAM system for transportation or peaking power generation.

storage area where it awaits conversion in the peaking section. During peak power consumption periods, the gas is removed from storage, preheated, and catalytically methanated in a reactor-steam generator unit. Here the heat of reaction is extracted, producing high-pressure steam which, in turn, is used to produce peaking power. The product gas, consisting primarily of methane and steam, is then cooled; the water is condensed and removed. Some of the methane is returned to the reforming section, and the remainder is sent to a high-pressure storage area for later use.

The storage of gases can be accomplished by several methods, of which three appear to be feasible: (1) high-pressure tank storage, (2) storage in aquifers, and (3) storage in mined caverns or dissolved-salt cavities. High-pressure tank storage can be accomplished in conventional high-pressure tanks located on the plant site. This method would have a high capital cost but is not restricted to any plant location. Aquifer storage, a technique that has had some development and application in the natural gas industry, is simply high-pressure storage in sedimentary rock formations called aquifers. These formations usually consist of a sandstone sublayer covered with a 20- to 200-ft impermeable "caprock." To store gas, a hole is drilled to a depth of 500 to 2000 ft. The gas is then injected into the sedimentary sublayer where it displaces the entrained water. The capillary action of the water contains the gas, and a pseudo-bubble is formed in the rock. In this manner a large volume of high-pressure gas may be stored at a relatively small capital expenditure. The third alternative in the storage of gases encompasses two techniques that are similar in concept but slightly different in economics. They are storage in mined caverns and in dissolved-salt cavities. In both cases an underground void is used to store the gas. This type of storage may be applicable in regions where sedimentary rock formations do not exit.

The alternative energy transport system is similar to the system previously described, except that the product synthesis gas is piped in a compressed gas pipeline rather than being stored. At the user end, the synthesis gas is methanated and the heat of reaction removed by producing process steam.

2.2.1 Results

The EVA-ADAM peaking power system is very capital-intensive. As can be seen by Table 27, the capital investment constitutes the major portion of the total annual cost, far outweighing the operating, maintenance, and fuel expenses. These high capital costs are, of course, largely because of the high cost of the nuclear island (reactor, reformer, and steam generator) and the power generating equipment; but, as can be seen by Fig. 23, the cash outlays for gas-to-gas heat transfer equipment in the loop and the methanator-steam generator section are significant. Additionally, the storage costs could be quite high, depending on the technique used, and could determine whether or not the system is economical.

Table 27. Economic analysis of EVA-ADAM peaking power plant

Item	Cost (10^6 \$)
VHTR	(600 to 800)
Base load turbine generator	87
Peak load turbine generator	369
H_2 storage (aquifer)	3.2
CH_4 storage (aquifer)	1.0
Base-plant heat exchanger	55
Peak-plant heat exchanger	103
Methanator-steam generator	132
Gas inventory	1.1
Total capital cost	(1351 to 1551)
Annual capital cost	(203 to 233)[a]
Annual operating and maintenance cost	17.8
Annual fuel cycle cost	34.3[b]
Total annual cost (before-base load credit)	(255 to 285)
Base-load power credit	22[c]
Total annual cost (after base-load credit)	(233 to 263)
Total peaking power produced (per year)	(4.11×10^9 kWhr)
Unit cost of peaking power	(56.7 to 64.0 mills/kWhr)
Peaking power generated	2207 MW(e)[d]
Base load power generated	248 MW(e)

[a]At 15% FCR.

[b]Forty-five cents per 10^6 Btu at 0.85 PCF.

[c]At 12 mills per kWhr.

[d]6 hr/day.

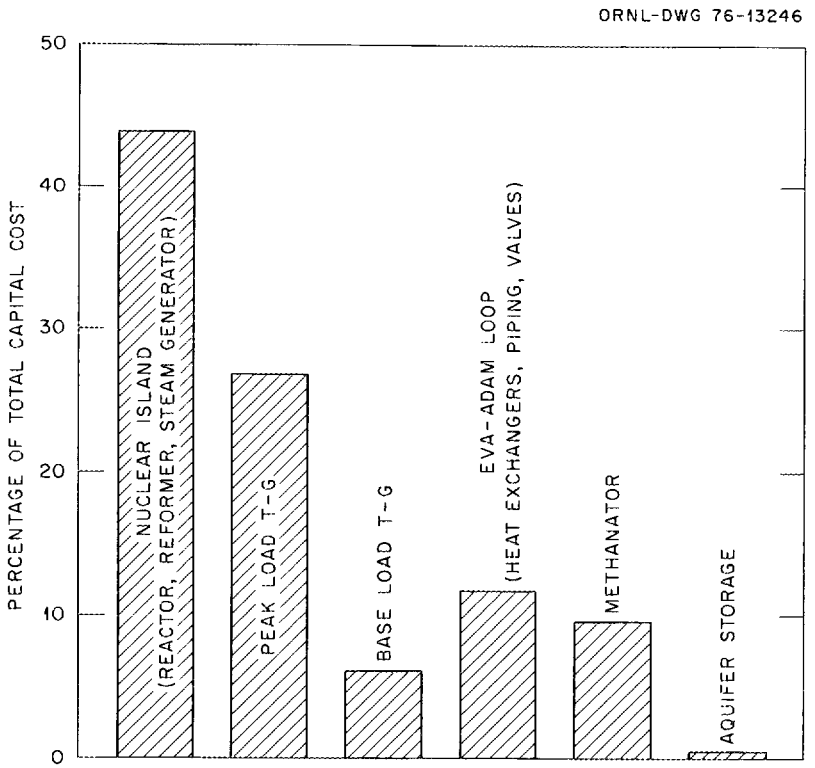

Fig. 23. Cost distribution for EVA-ADAM storage system.

A cost analysis using various high-pressure gas storage techniques shows that with high-pressure tank storage the capital costs become prohibitive. Figure 24 is a plot of peaking power costs (mills/kWhr) vs the assumed overall heat transfer coefficients in the gas-to-gas heat exchangers using three storage techniques: aquifer storage, mined cavern storage, and high-pressure tank storage. It can be inferred from these results that without a low-cost underground storage technique, this system will in all probability never be economically feasible. It can also be deduced from this plot that the system's costs are somewhat sensitive to the effectiveness of the heat transfer equipment. With an overall heat transfer coefficient below 30 Btu hr^{-1} ft^{-2} $°F^{-1}$, the capital costs for the heat exchange equipment become important. This will, of course, be a tradeoff of capital costs and pumping power; but, as also can be seen from Fig. 24, increasing the heat transfer coefficient beyond 30 Btu hr^{-1} ft^{-2} $°F^{-1}$ does not significantly decrease the system cost.

The steam-to-methane ratio is another design parameter of significant interest. However, in the configuration used in this analysis the peaking cost was insensitive to the steam-to-methane ratio because the gain in reaction conversion was offset by higher capital costs and more energy waste.

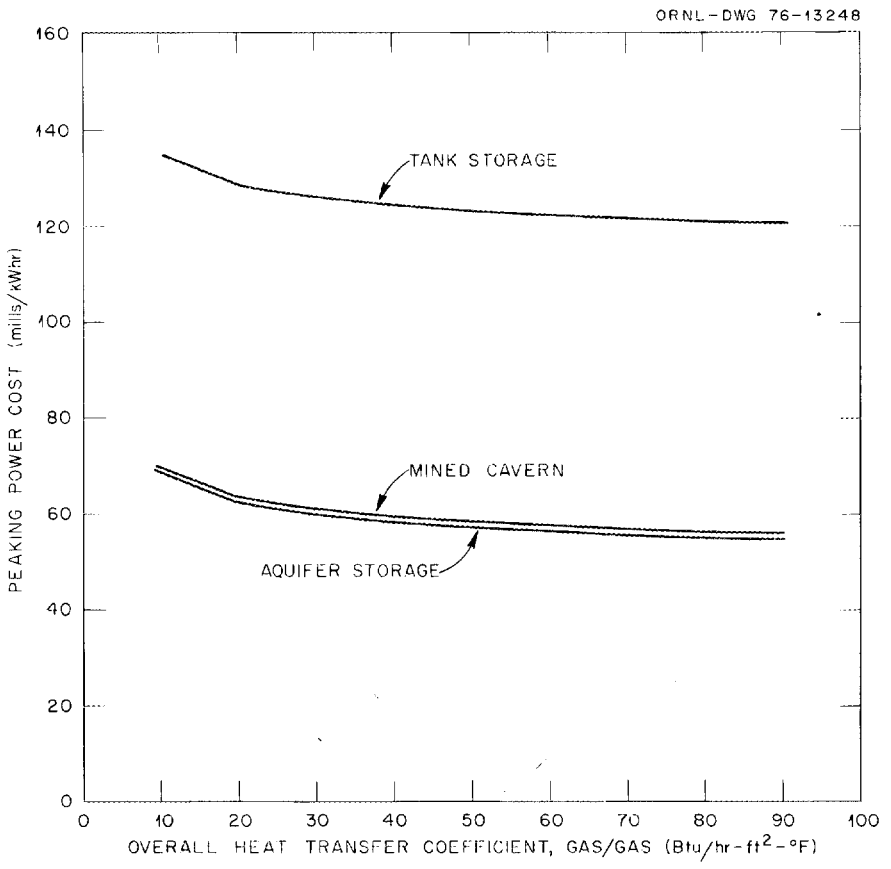

Fig. 24. EVA-ADAM peaking power costs for various storage techniques.

As with the peaking system, an EVA-ADAM pipeline is highly capital-intensive, as is depicted in Table 28. In addition to the inherent high capital costs of a nuclear energy source, the pipeline costs are high. Transportation costs are substantially higher than those for synthetic pipeline gas or hydrogen because (1) the heat of reaction is lower; (2) two pipelines are required; (3) the reaction conversion is much lower in the reforming methane reaction than in straight oxidation; and (4) because of the stoichiometry, four times as many reactants must be transported.

2.2.2 Detailed system description

The configuration used in this analysis is the same for both the storage and the transportation systems (Fig. 25). The power source is a 3000-MW(t) VHTR cooled by a helium-heated steam reformer and steam generator. The reformer is a series of tubes packed with nickel catalyst and which contains an inner regenerative return line similar in design

Table 28. EVA-ADAM pipeline cost summary

Item	Costs ($ x 10^6)
Capital costs	
VHTR	600 to 800
Base-load turbine generator	87
Heat exchangers	101
Methanator	13
Pipeline	
Pipe, cost per mile	1.7
Compressor, cost per mile	0.3
Total	801 to 1001 + 2/mile
Annual costs	
Capital @ 15% FCR	120 to 150 + 0.3/mile
Operating and maintenance	17.8
Fuel	34.3
Pumping, cost per mile	0.05
Total	172 to 202 + 0.35/mile
Electrical credit @ 12 mills/kWhr, cost per mile	22
Total cost	150 to 180 + 0.35/mile
Product cost	3.42 to 4.10 $/$10^6$ Btu + 0.008 $/$10^6$ Btu/mile
Total heat transported	1770 MW (6.04 x 10^9 Btu/hr)
Total steam heat produced	1730 MW (5.9 x 10^9 Btu/hr)

to that being studied by GE and the German KFA.[50] The steam generator is heated with helium exhausted from the reformer and produces steam at 950°F and 2400 psi. This steam is used to produce base-load power and to supply feed steam for the methane-steam reformer. The base-load plant is patterned after an HTGR cycle[51] as detailed by the cycle conditions listed in Table 29. Deviations from the standard HTGR cycle are: (1) the auxiliary equipment is assumed to be motor driven; (2) the feed heating is external; and (3) part of the high-pressure turbine exhaust is fed to the reformer and the remainder fed to the reheater, which is also external.

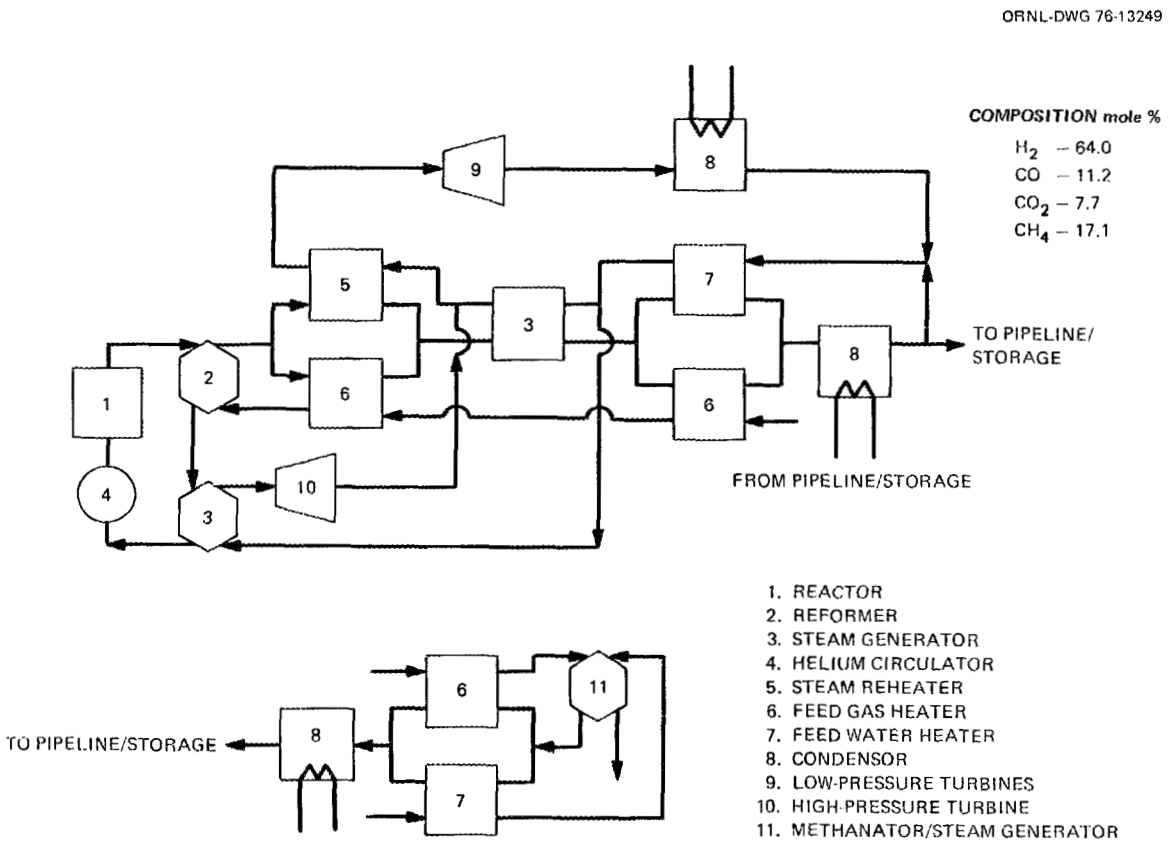

Fig. 25. Schematic of the EVA-ADAM energy transport and storage system.

The reformer feed steam is mixed with preheated methane and catalytically reacted in the reformer. The reaction is assumed to reach equilibrium and is exhausted through the inner tube which cools the product gases and supplies heat for the reaction. The product gas stream is split so that 20% goes to a steam reheater where it is cooled by superheating the steam to 1000°F. The other 80% preheats the steam and methane feed. The product gases are again cooled in a steam generator which produces intermediate pressure steam for the process. The product gases are then used to provide heat to preheat the methane and to provide feed-water heating. Final gas cooling and water removal take place in a waste heat condenser. The dry synthesis gas is then either sent to an underground storage or it is transported in a compressed-gas pipeline.

In either system, the synthesis gas is removed from storage or the pipeline, preheated, and sent to a methanator. Within the methanator the heat of reaction is removed to produce steam at 825°F and 1000 psi. The product gas, primarily methane and steam, is cooled and the water condensed by preheating the feed gas and feed water. The product is finally cooled, and the remaining water is removed in a waste heat condenser. The methane product is returned by pipeline or sent to another storage area.

Table 29. Base-load turbine-generator plant design data

Item	Temperature (°F)	Pressure (psi)	Enthalpy (Btu/lb)	Entropy (Btu/lb-°F)
Turbine throttle	950	2400.00	1427.9	1.5099
Governing stage bowl	944	2283.07	1427.9	1.5147
Governing stage expansion line end point and upper energy end point, high-pressure bowl	871	1761.96	1399.4	1.5188
High-pressure section expansion line end point	594	594.10	1286.8	1.5303
High-pressure section upper energy end point	597	594.10	1288.3	1.5318
Reheater inlet	596	589.90	1288.3	1.5325
Reheater outlet	1018	579.30	1527.3	1.7257
Intermediate-pressure section bowl	1017	554.00	1527.3	1.7305
Intermediate-pressure section expansion line end point	661	143.30	1356.9	1.7445
Intermediate-pressure section upper energy end point	664	143.30	1358.4	1.7459
Low-pressure section bowl	663	139.00	1358.4	1.7492
Low-pressure section expansion line end point	101	0.98	1011.4	1.8116
Low-pressure section upper energy end point	101	0.98	1040.3	1.8631
Condenser hot well	101	0.98	69.1	0.1315
Feedwater pump outlet	106	3000.00	81.9	
Final feedwater after waste heat input	565	3000.00	564.1	

The peaking plant was sized to receive the entire thermal production in a 6-hr period. The turbine generator plant does not follow a particular cycle, but the cycle conditions (Table 30) represent a lower limit for fossil-type systems.

2.2.2.1 Economic methodology

The economic analysis for the EVA-ADAM peaking power and transportation system was conducted using the data listed in Table 31. The estimated capital cost of the VHTR was taken to be between $600 and $800 million.[4] The $600-million VHTR may be considered either a lower estimate VHTR or one without an IHX. The VHTR capital costs are that of a nuclear island consisting of a reactor, a steam generator, and a reformer. These costs do not include reactor or material development and were assumed to be independent of the steam-to-methane ratio. The high-pressure storage areas for the peaking system were assumed to have the same costs as those for conventional storage of hydrogen and methane. These costs were developed from data in ref. 52 and are listed in Table 32 for various storage techniques. The turbine generator costs were derived with the aid of ref. 53.

Transportation costs were calculated assuming a conventional gas pipeline and electric driven compressors. The pipe and pump costs were derived from ref. 54.

Heat exchangers for the EVA-ADAM loop were priced on the basis of cost per unit area of heat transfer surface. Each exchanger was assigned a basic unit cost based on the maximum operating temperature, pressure, and material considerations. The heat transfer surface areas were calculated after determining the heat transfer rates, mean temperature differences, and assumed overall heat transfer coefficients. Additionally, the costs of piping, valves, labor, controls, etc., were determined by multiplying the exchanger costs by an adjustment factor. The methanator capital costs were based on cost per unit area of heat transfer surface. This assumes that the reaction is heat-transfer-limited and is justified by the relatively high temperature at which the methanator would operate.

The annual operating and maintenance (O&M) costs were obtained as a multiple of the equivalent O&M costs for an HTGR obtained from the ORCOST computer code.[55] The component costs of staff, maintenance, material, supplies, and expenses were each increased by 50% to adjust for the additional plant size; insurance, fees, administrative, and general expenses were not. Using the data from this code, a linear relationship between O&M costs and power plant size was derived. Additionally, catalyst costs were added to the O&M costs. The catalyst was assumed to have a life expectancy of four years at a unit cost of $\$300/ft^3$. The volume of catalyst needed was calculated using the assumption of a first-order reaction and the method developed in ref. 56.

Table 30. Peak-load turbine-generator plant design data

Item	Temperature (°F)	Pressure (psi)	Enthalpy (Btu/lb)	Entropy (Btu/lb-°F)
Turbine throttle	825	1250.00	1392.8	1.5474
Governing stage bowl	820	1189.10	1392.8	1.5524
Governing stage expansion line end point and upper energy end point, high-pressure bowl	751	906.40	1364.2	1.5566
High-pressure section expansion line end point	431	214.50	1227.2	1.5715
High-pressure section upper energy end point	433	214.50	1228.7	1.5732
Reheater inlet	433	213.00	1228.7	1.5739
Reheater outlet	825	209.10	1437.3	1.7705
Low-pressure section bowl	824	200.00	1437.3	1.7753
Low-pressure section expansion line end point	101	0.98	1025.1	1.8360
Low-pressure section upper energy end point	101	0.98	1058.1	1.8948
Condenser hot well	101	0.98	69.1	0.1315
Feedwater pump outlet	104	1562.50	75.8	
Final feedwater after waste heat input	311	1562.50	283.4	

Table 31. EVA-ADAM cost estimate basis

Nuclear fuel	$0.45/10^6 Btu
Electricity	$0.012/kWhr
Fixed charge rate	0.15
Interest during construction	8%
Date of first commercial operation	1982
Standard operating year	310 days
Steam: methane ratio	2

Table 32. Cost comparison for methane and hydrogen storage at 15.6°C (60°F) [estimated capital cost for storing 1 kg-mole at 6.894 MPa (1000 psi)]

Storage system	Cost ($)	
	CH_4	H_2
Underground storage (aquifer)	0.66	0.8162
Dissolved-salt cavity	1.89	2.32
Mined cavern	3.78	4.64
Steel pipe (line packing)	40.40	49.60
Tank storage	191.10	233.60

2.3 Heat Transfer Salt

The EVA-ADAM system considers storage in the form of chemical energy. The heat transfer salt (HTS) system is based on thermal energy storage as sensible heat high-temperature salt.

In our analysis of the technology applicable to supplying high-temperature thermal energy to a refinery, including the study by General Atomic (GA), it became apparent that the HTS, selected from a number of possible alternative heat transport fluids, would also be applicable for thermal storage for generation of intermediate-load and peaking electricity.

2.3.1 Heat source

The requirement for nuclear reactor technology is no more severe than for existing HTGR technology — a core outlet temperature of approximately 1300°F (the standard HTGR design has a core outlet temperture of about 1400°F). The reactor may be thought of as either a VHTR or a process-heat HTGR. In the study of heat transport to a refinery via HTS, GA indicated that two major modifications would be made to the HTGR PCRV internals: (1) the steam generators would be replaced by primary helium to secondary helium heat exchangers; and (2) the number of primary reactor cooling loops would be reduced (from 4 to 3 for the 2000-MW(t) plant).[42]

2.3.2 Salt

Heat transfer salt is a eutectic mixture of potassium nitrate (KNO_3), sodium nitrite ($NaNO_2$), and sodium nitrate ($NaNO_3$). Developed by du Pont in the 1930s for use in the chemical and petroleum process industries, HTS is economical and has good heat transfer properties. The usual composition by weight is 53% KNO_3, 40% $NaNO_2$, and 7% $NaNO_3$.[57] Some of the more important physical properties of HTS for this application include its low melting point 142°C (288°F), thermal conductivity (0.33 Btu hr^{-1} ft^{-1} $°F^{-1}$), specific heat (0.373 Btu lb^{-1} $°F^{-1}$ — see Fig. 26), density (see Fig. 27), viscosity (see Fig. 28), and heat transfer coefficient (800 to 2900 Btu hr^{-1} ft^{-2} $°F^{-1}$, over a wide range of temperatures and velocities). Heat transfer salt has been widely used in many industrial applications and in very large volumes. For example, one Houdry catalytic cracking and refining unit uses on the order of 1×10^6 lb of HTS.[57]

Vendor and open literature publications recommend use of HTS up to 1100°F,[58-63] although data on thermal stability at high temperatures are not adequate. A literature study on HTS, along with some experimental data, are presented by Bohlmann in a 1972 report.[57] The generally accepted overall thermal decomposition reaction for HTS is:

$$5NaNO_2 \rightarrow 3NaNO_3 + Na_2O + N_2 \ .$$

This stoichiometry was used to analyze decomposition as a function of temperature. Despite the disparate conditions of the various investigations, the results are relatively consistent. Based on the data presented in Fig. 29, estimated amounts of salt replacement have been calculated for 1100° and 1000°F operation.

Corrosion data presented in the aforementioned report indicate that HTS has been satisfactorily handled on a long-term basis in stainless steel equipment up to 1100°F and in carbon steel up to about 850°F.

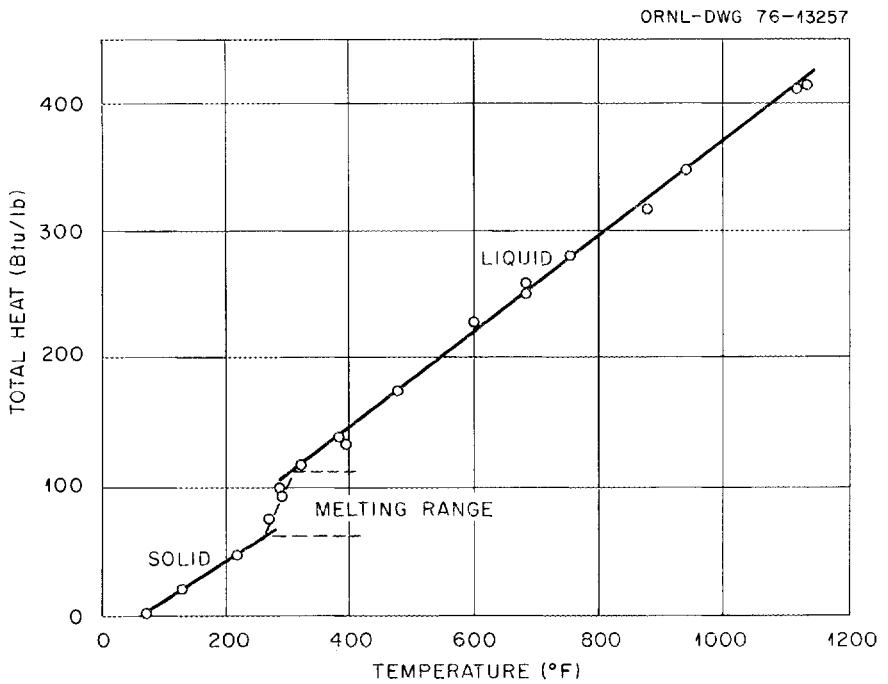

Fig. 26. Enthalpy of HTS vs temperature.

2.3.3 System description

Figure 30 is a schematic diagram of an electric peaking power generating system based on HTS energy storage. The economic analysis considers 1000° and 1100°F maximum salt temperature with and without an IHX. The more conservative case is illustrated (1000°F with IHX). The 3000-MW(t) system will provide 200 MW(e) continuously and 3667 MW(e) for 6 hr/day (peaking power). The system is designed to store 43,200 MWhr of thermal energy. The peaking plant turbine cycle is essentially the same as an HTGR power cycle, and the base-load turbine cycle is the same as a boiling-water-reactor power cycle.

2.3.4 Economic analysis

Table 33 presents a summary of the preliminary economic analysis of the HTS peaking power storage plant. Case 4 at 1000°F with an IHX is the reference case.

Costs included for the VHTR and IHX are those derived in ORNL's VHTR assessment which were intended for higher temperature application. General Atomic's estimate of these costs, as presented in their refinery study,[42] is markedly less. Obviously, a better definition of cost for this particular application is desirable. We believe ours is a very

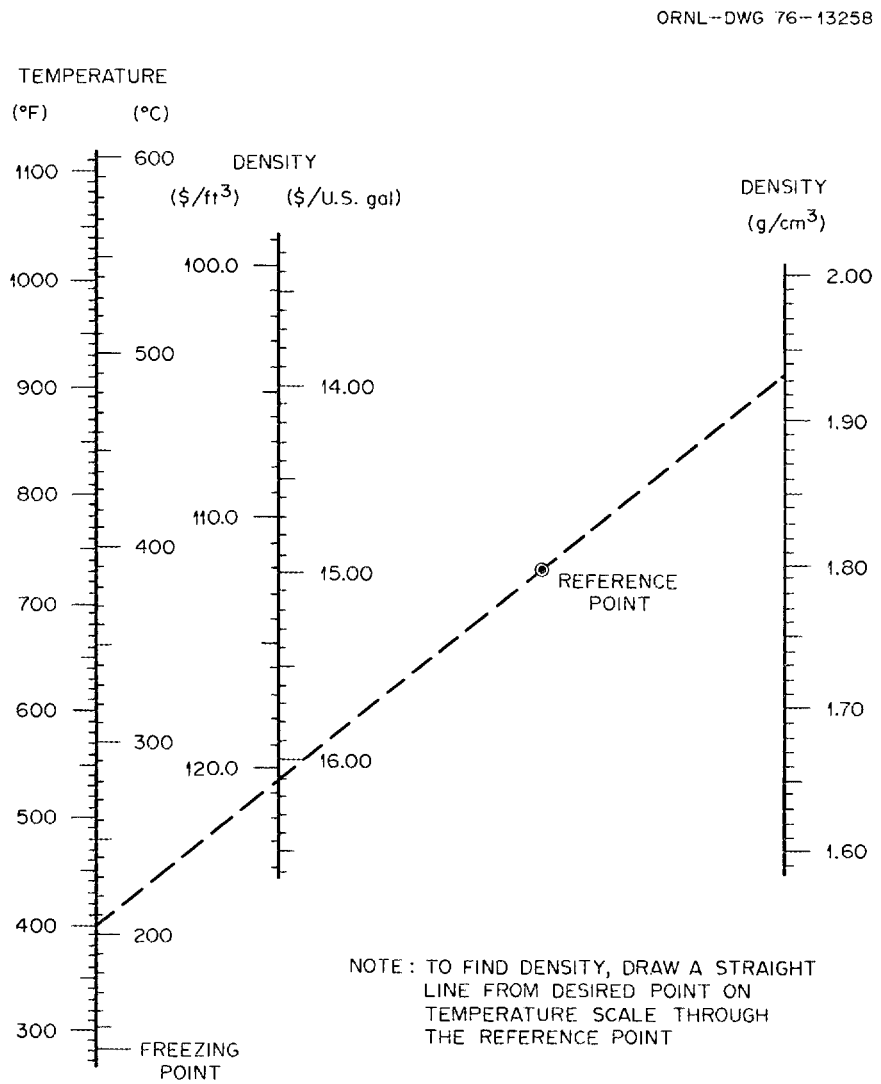

Fig. 27. Density of liquid HTS.

conservative assessment of the economic potential of the concept. There appears to be some reasonable possibility of improving the competitive position of the HTS storage system relative to current estimates with a more thorough and detailed analysis.

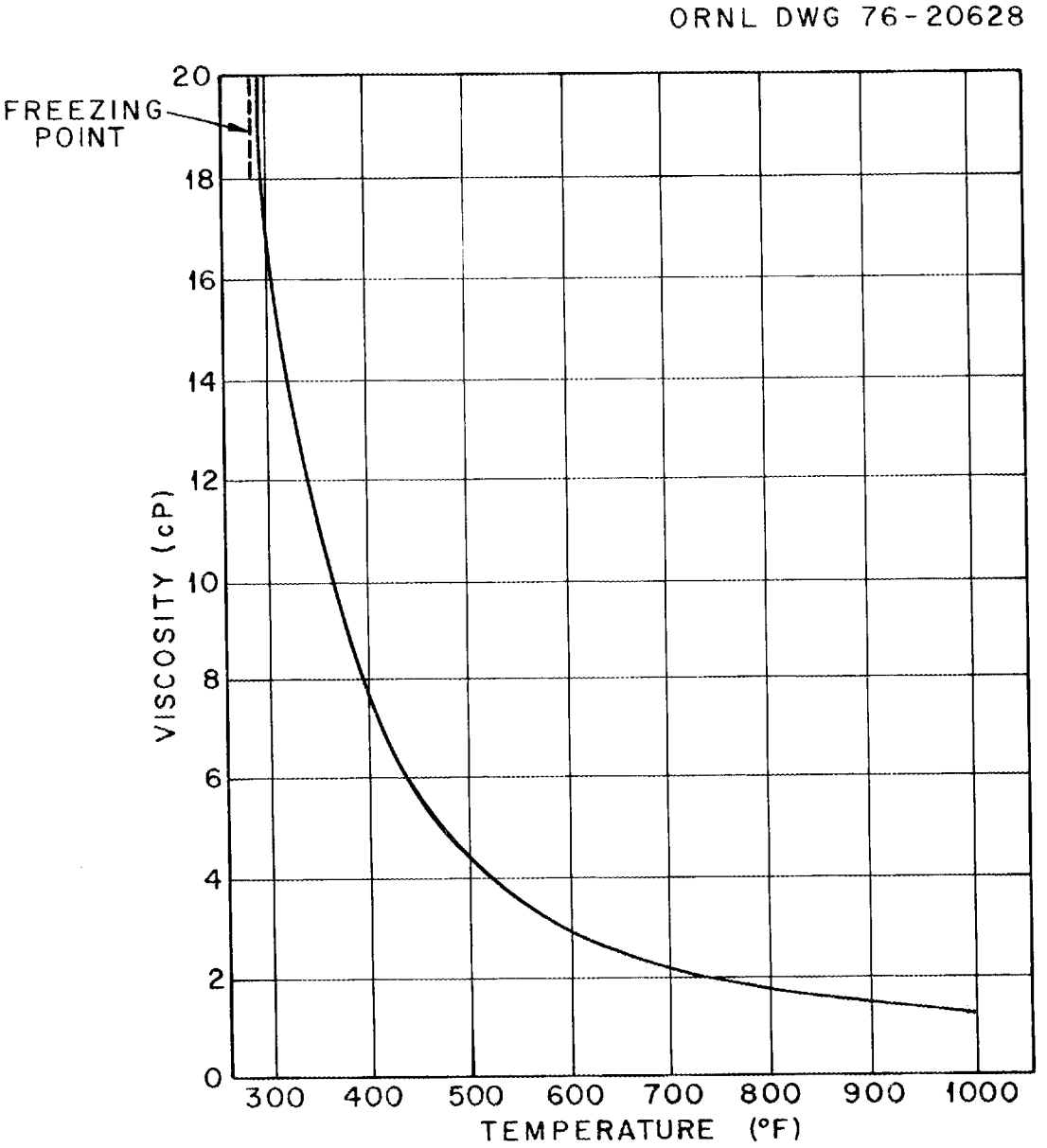

Fig. 28. Viscosity of liquid HITEC.

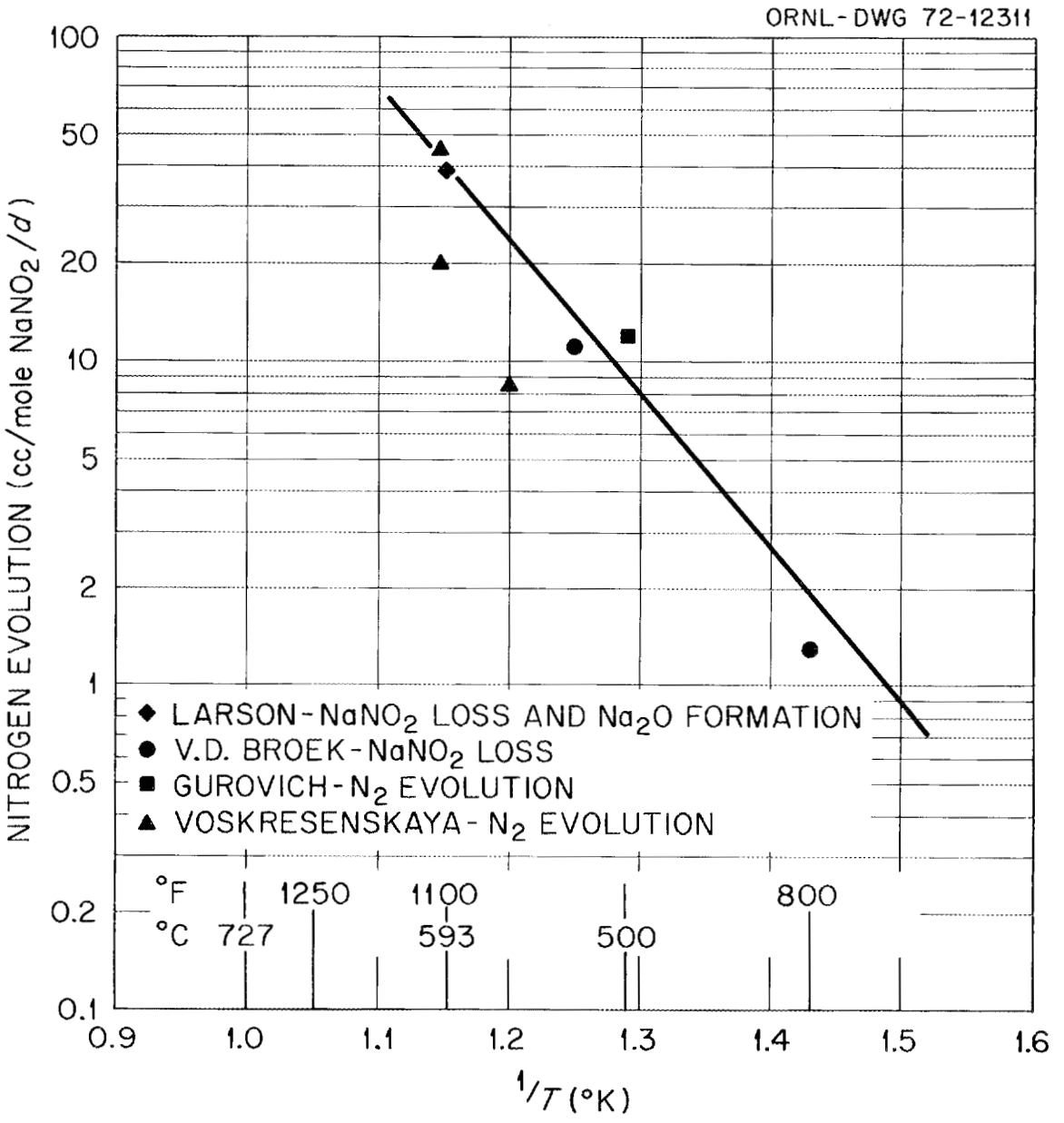

Fig. 29. Rate of nitrogen evolution from HTS vs temperature.

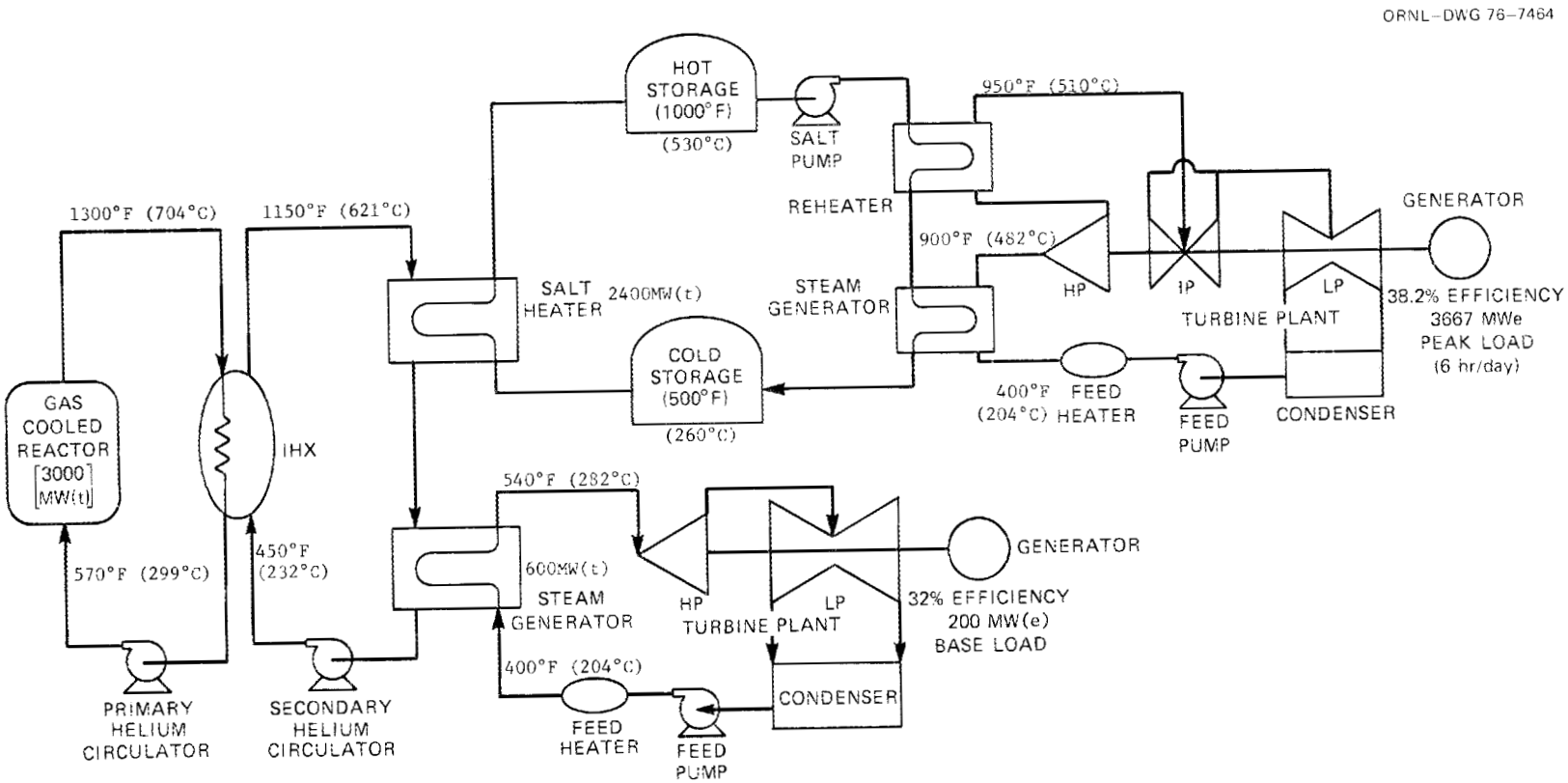

Fig. 30. VHTR peaking power system using HTS storage.

Table 33. Preliminary economic analysis of HTS peaking power plant

Item	Direct and indirect costs ($ x 10^6)				Comments
	Salt temperature of: 1100°F		1000°F		
	Without IHX	With IHX	Without IHX	With IHX	
Capital cost					
VHTR	600	600	600	600	Includes steam generator and process heat exchanger.
IHX		100		100	Based on data in VHTR evaluation report.
Turbine island (HTGR cycle) 3744-MW(e) peaking plant	599	599	599	599	Scaled directly from HTGR turbine island cost data.[a]
Turbine island (BWR cycle) 200-MW(e) base load	36	36	36	36	Scaled directly from BWR turbine island cost data.[a]
Salt inventory	140 (6.7 x 10^6 lb)	140	168 (8.1 x 10^6 lb)	168	Based on 20¢/lb (scaled up from 15¢/lb).[b,c] 2400-MW(t) storage for 18 hr.
Salt storage	95 (6.4 x 10^6 ft^3)	95	114 (7.4 x 10^6 ft^3)	114	Estimated at $15/$ft^3$; average density 110 lb/ft^3.
Salt loop	25	25	30	30	Estimated from data refinery study.[b]
Total capital cost	1495	1595	1547	1647	
Annual capital cost	224	239	232	247	15% FCR.
Annual operating and maintenance cost	9	9	9	9	Conservatively estimated at about twice conventional HTGR plant of equivalent size.
Annual fuel cycle cost	35	35	35	35	Based on 45¢/10^6 Btu at 0.85 plant factor.
Annual salt replacement cost	56	56	20	20	Estimated from HTS decomposition rates.[d]
Total annual cost	324	339	296	311	
Base-load power credit	18	18	18	18	12 mills/kWhr; 1490 x 10^6 kWhr/year at plant factor.
Net annual cost (peaking power)	296	321	278	293	
Total peaking power	6.97 x 10^9 kWhr/yr		6.83 x 10^9 kWhr/yr		39% and 38.2% efficiencies for peaking power cycles based on HTS at 1100° and 1000°F respectively.
Unit cost of peaking power, mills/kWhr	42.5	46.0	40.7	42.9	25% plant factor on a daily basis.

[a] T. D. Anderson et al., *An Assessment of Industrial Energy Options Based on Coal and Nuclear Systems*, Report ORNL-4955, Oak Ridge National Laboratory, July 1975.

[b] J. Huntsinger et al., *Process Heat in Petroleum Refinery Applications — Final Report*, Report GA-A13406, General Atomic Company, February 1976.

[c] E. G. Bohlman, *Heat Transfer Salt for High Temperature Steam Generation*, Report ORNL/TM-3777, Oak Ridge National Laboratory, December 1972.

[d] Rates presented in Fig. 27.

3. MATERIALS REQUIREMENTS FOR PROCESS HEAT EXCHANGERS

Important factors that influence the selection of materials for heat exchanger applications are temperature, stress, environment, and operating lifetime. Although the stress on the PHX material will depend on the process design selected, the operation of the process at a pressure close to the coolant helium pressure will minimize tube stresses and creep rates in the PHX material. In view of the interaction between mechanical properties and environment, consideration must be given to the chemical compatibility of candidate materials with the process. The environments are expected to be made up of impure helium, hydrogen, steam, coal, ash, and various hydrocarbons.

In this analysis, families of alloys have been considered with the objective of recommending a smaller group of materials for each proposed operating condition. The families of materials selected are listed in Table 34 and cover the range of conventional construction materials currently used in high-temperature applications. Following a brief description of the critical operating conditions required for the steam reforming and steam-coal gasification processes, these families of materials will be reviewed with respect to the mechanical properties and compatibility requirements of the two processes. This is followed by a description of the Westinghouse thermochemical hydrogen process and a review of the materials requirements for this process.

3.1 Steam Reforming

In conventional steam reforming plants, the energy for the endothermic reaction is supplied by burning ash- and sulfur-free hydrocarbons in preheated air. These combustion gases travel countercurrently to the process gas which flows through catalyst-filled tubes. To reduce hydrocarbon consumption, nuclear process heat is being considered as the energy source for this process.

Where possible, the material evaluation of the VHTR reformer system will be based on the design of conventional fossil-fired reformers. A VHTR reformer design might incorporate straight tubes packed in a full tube field hung vertically from a single tubesheet. High-temperature helium enters at the bottom of the reformer and exits at the top. Process gases pass through the tubesheet and down the catalyst-filled tubes and are exhausted through semiflexible pigtails welded to the bottom of the tubes.

In conventional reformers, the pigtails are made from type 304 or 316 stainless steel. The catalyst tubes are typically 28 ft long with a 1/2-in. wall thickness and are made from centrifugally cast alloys such as HK-40. The tubesheet is constructed of 304 stainless steel, which is clad on the top surface with a weld overlay of Incoloy 800.

Table 34. Representative candidate materials for initial screening

Categories of materials	Exemplary grades
Stainless steels	Types 310, 316, 304
Nickel-base alloys — solid solution strengthened	Alloys 102, 536, 600, 601, 617, 800H, 802, 903, RA333, Hastelloy X
Nickel-base alloys — precipitation strengthened	Alloys 702, X750, 901, D979, 718 Alloys U700, Waspaloy, Rene 95
Cobalt-base alloys	Alloys L-605, HS-188
Centrifugally cast alloys	Alloys HK-40, Supertherm, 519, 657, Mo-Re 2, Manurite 36X
Oxide-dispersion-strengthened alloys	Alloys TDMi, TDMMiCR, IMMA-753
Refractory alloys	Molybdenum, Alloy TZM
Ceramic refractory	SiC, Si_3N_4, Al_2O_3, SiO_2

3.2 Steam-Coal Gasification

In establishing criteria for the selection of material for the VHTR steam-coal gasifier, an earlier design study by the West Germans for the gasification of lignite can be used as a point of departure.[64] The proposed gasifier is a horizontal cylinder about 80 ft long and 18 ft in diameter. Coal is reacted in a fluidized bed in which a heat exchanger is located. Coal enters the gasifier at the upper right; ash and slag are withdrawn through an opening at the lower left. The bed is fluidized by high-temperature steam injected from below. Heated helium enters the heat exchanger from above, flows through tubes inside the bed, and then joins the collector tubes to leave the gasifier through an upper outlet. Although the specific operating temperature and pressure for the proposed gasifier were not specified, the design approach was to balance the pressure across the PHX tubes while operating the gasifier at the highest practical temperature. Operating temperatures of 1500° to 1925°F were considered in the German study.

In addition to those corrosion conditions observed in steam reforming systems, materials in the fluidized-bed coal gasifiers will be subject to erosion-corrosion reactions with char and ash entrained in the steam and sulfidation from H_2S formed by the reduction of organic sulfur impurities in the coal. In their initial studies, the Germans explored the potential use of 310 stainless steel and Incoloy 800 for the tube material; however, these materials have shown only short-term usefulness in the 1700° to 1900°F range.

3.3 High-Temperature Load-Carrying Capabilities

With regard to the steam reformer and coal gasification systems, the principal factors influencing the useful life of the heat exchanger tubing will be load-carrying capability and corrosion resistance. The objective of this section will be to review the factors pertinent to the load-carrying abilities of candidate materials for heat exchanger tubing.

Commercial operation of these proposed systems will require the owners to obtain state and federal licenses. To obtain the appropriate license and insurance will require that the facilities be designed and built in conformance with minimum standards provided by the technical community. In the petrochemical industry, the standards applied to gas-fired steam-methane reformers are those established by the American Petroleum Institute. Since no commercially operating coal-conversion system has been built in the United States, no precedent has been established regarding design and fabrication standards.

To protect the public, the design and fabrication of nuclear power stations are required to comply with Sect. III of the ASME Boiler and Pressure Vessel Code. With regard to the proposed nuclear-powered steam reformer and/or coal gasification systems, one could postulate that a failure of the process pressure vessel could lead to a rupture of the IHX. In turn, failure of the IHX could allow the release of reactor core gases. It is anticipated that this scenario could be used to require that the design and fabrication of the pressure vessels associated with steam reforming and coal gasification systems conform with Sect. III of the ASME Code. A review of the impact of such a decision on the selection of heat exchanger tube material follows.

Section III of the ASME Code was established to aid design and material selection for nuclear components. The ASME Code recognizes that different levels of importance can be associated with each component; therefore, there are three classes of nuclear components. Classes 1, 2, and 3 represent components with decreasing levels of design and inspection stringencies. Based on this scenario, the PHX would most likely be a class 1 component.

As written, Sect. III of the code gives design rules and stress intensity limits as a function of temperature up to 700° and 800°F for ferritic and austenitic materials respectively. Code Case 1592 of Sect. III provides stress limits and revised design rules for the use of four alloys for class 1 components at temperatures in the creep range. This code case allows the use of 304 and 316 stainless steels to 1500°F, Incoloy 800H to 1400°F, and 2-1/4 Cr-1 Mo steel to 1200°F. The maximum allowable stress intensities for these alloys for temperatures from 800° to 1500°F are illustrated in Fig. 31.

At these temperatures, creep strength is the limiting factor in the load-carrying capabilities of the candidate materials. At 1400° to 1500°F, the maximum allowable stress intensity limits for these Code Case 1592 approved materials range from 1100 to 3600 psi. Note that no materials have been approved for use at temperatures above 1500°F.

When provided sufficient data, the Code Committees can establish stress intensity limits for Code-approved materials at temperatures in

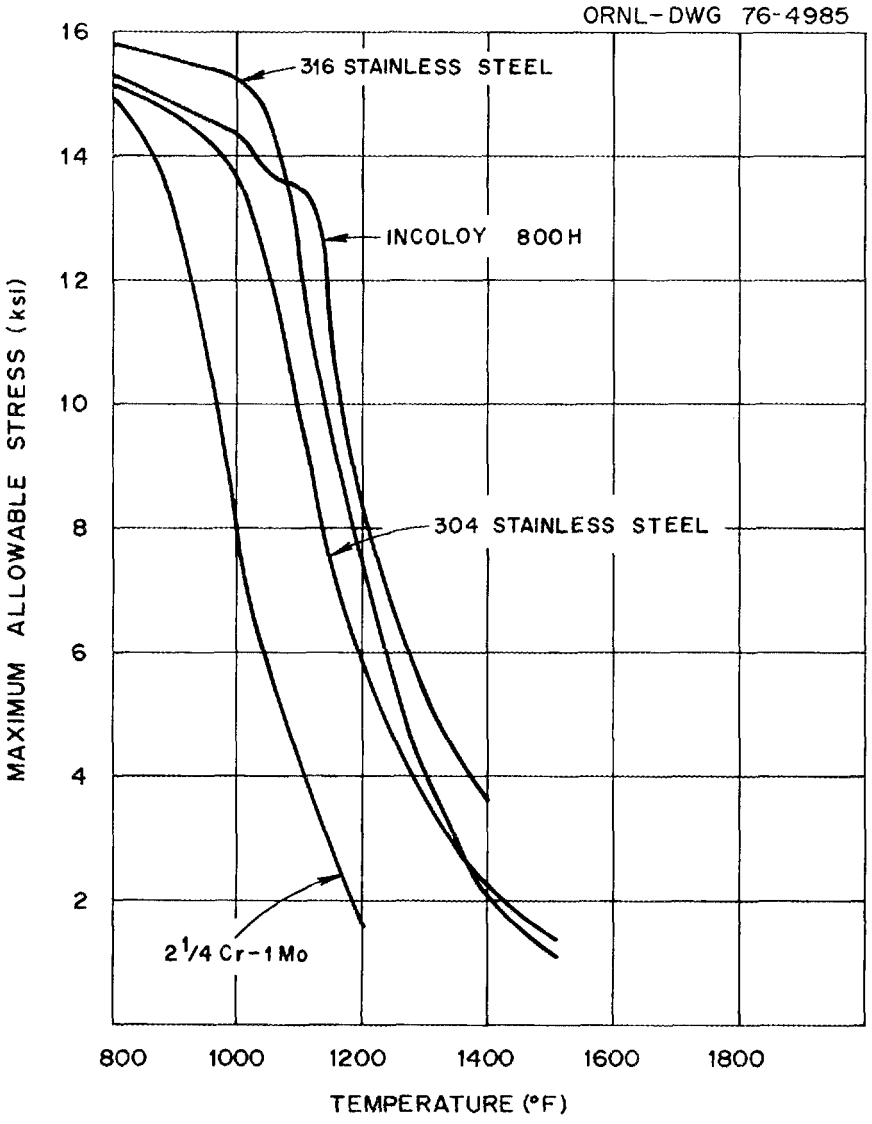

Fig. 31. Maximum allowable stress intensities for Code Case 1592 materials.

excess of 1500°F. However, extrapolation of the maximum allowable stress limits (Fig. 31) to higher temperature indicates stress intensity limits for these materials at 1600°F would be near or below 1000 psi. One should be skeptical about recommending a material for a heat exchanger of this size which operates at 1600°F and which has stress allowables below 1000 psi.

Since additional alloys can be added to the Code, a review of the creep rupture strength of those candidate materials listed in Table 34 is useful, and such information has been generated by a special task group of the American Iron and Steel Institute (AISI).[65] Data from the

Larson-Miller extrapolation of 6000- to 40,000-hr creep rupture were used to predict the stress rupture limits at temperatures ranging from 1500° to 1800°F for a variety of materials. This analysis of the Larson-Miller extrapolation of stress rupture behavior for 5- to 30-year service (about 40,000 to 300,000 hr) indicates that: (1) solution-hardened nickel-base alloy (i.e., Inconel 600, 601, and Incoloy 800) had superior stress rupture properties when compared to stainless steel materials; (2) further improvement in stress rupture properties was observed with centrifugally cast alloys (i.e., HK40 and CF8M); (3) precipitation-strengthened nickel-base alloys (Waspaloy and D979) were stronger than any iron- or nickel-base alloy in the 1300° to 1600°F range (however, above these temperatures these materials over age and rapidly lose strength and ductility); and (4) these data indicated that molybdenum and TZM alloys are candidates for process temperatures of 1700° to 2200°F. In conclusion, these data suggest that 1650° to 1700°F could possibly be an upper limit for the use of the nickel-base and centrifugally cast alloys in long-term creep conditions. However, a review of stress rupture properties supplied by Huntington Alloy[66] for a variety of their solid-solution nickel-base alloys did not agree with the special task group's report. The Huntington Alloy data suggest that the stress rupture properties for their alloys are significantly lower than those indicated by the special task group.

Extrapolation of the ASME Code data indicates that stainless steels will not be expected to have sufficient creep rupture strength to be considered candidates for processes at temperatures in excess of 1550°F. However, design requiring the replacement of tube materials on a three- to five-year basis may allow the use of stainless steel to process temperatures as high as 1600°F.

In view of the variations in available stress rupture properties and in the high product reliability that will be required in nuclearly associated facilities, an accurate assessment of the upper temperature limit at which nickel-base alloys and centrifugally cast materials could be used cannot be made at this time. However, one would anticipate that use of these materials in designs that will require their replacement on a three- to five-year basis would allow their use at temperatures in excess of those estimated for the stainless steel materials.

3.4 Materials Compatibility

The purpose of this section is to review the potential compatibility problems that are expected to affect the service life of the PHX tube materials. This will be done by evaluating separately the corrosion of the candidate materials when exposed to impure helium and process environments.

It has been documented that the helium used as the primary coolant in the high-temperature reactor (HTR) contains reactive impurities such as H_2, O_2, CO_x, and CH_x. The apparent sources of these impurities are out-gassing of the graphite moderator material and in-leakage. Structural and tubing materials exposed to this environment have been subject to either internal oxidation or internal carburization of selected alloying elements, depending on impurity ratios present in the helium.[67,68]

The oxidation potential of materials in the primary coolant stream is related to the H_2:H_2O ratio. Using the operating temperatures and the range of H_2:H_2O ratios observed in existing HTR test facilities, one would anticipate that nickel, cobalt, and copper would be reduced in this environment. On the other hand, manganese, chromium, silicon, aluminum, titanium, and niobium would be oxidized, and iron, molybdenum, and tungsten would respond intermediately.

The potential for selective carburization is dependent on the following partial pressure ratios: $P_{CH_4}:P^2_{H^2}$ and $P^2_{CO}:P_{CO^2}$. Using the primary helium maximum operating temperature and the range of CH_4, H_2, and CO_2 observed in existing HTR test facilities, one finds that chromium, titanium, and aluminum would be carburized, whereas nickel, cobalt, and copper would be unaffected.

Note that the above observations are based on operating temperatures and impurity concentrations in the primary helium coolant. However, the secondary coolant will be isolated from the primary loop and will operate at a lower temperature. Since the secondary coolant loop does not contain graphite, the level of CO, CO_2, and CH_x should be lower. In view of these factors, interactions between PHX materials and the secondary helium coolant should be less severe than those observed in the primary helium loop.

As indicated above, the process environment of both the steam reformer and coal gasification systems is expected to be highly corrosive. These environments will be strongly reducing and contain significant quantities of CO, H_2, and CH_4. The coal gasification process will also contain quantities of H_2S and abrasive particles of ash and char. A brief description of the anticipated forms of corrosion which may influence the service life of the tube materials in these two systems follows.

A catastrophic form of carburization of materials used at high temperatures in reducing environments has been encountered in the petroleum industry.[69] This form of carburization is called carbon dusting. It has been found by the petroleum industry that this can be retarded by using iron-chromium-nickel alloys containing nickel in excess of 20%. Additional improvements could be realized with silicon additions up to 2%; however, this level of silicon is not normally possible in wrought alloys but can be realized in centrifugally cast alloys.

Recently, U.S. Steel reported a failure in their Clean Coke process because of carbon dusting.[70] They noted that type 316 stainless steel, used as a downcomer in the pyrolysis reactor in this system, was carburizing at a rate of 0.25 mil/hr. The situation was rectified by maintaining the H_2S content of the system above 10 ppm and by replacing the 316 material with Incoloy 800.

An analysis of the resistance of a cross section of candidate materials to high-temperature sulfidation is currently being carried out by IITRI.[71] In this program, candidate materials are exposed to environments of 0.01, 0.5, and 1.0 vol% H_2S for 1000 hr at temperatures and pressures of 1800°F and 1000 psi. Based on preliminary results, a ranking of the materials in terms of their corrosion resistance to these environments (greatest to smallest) would be as follows: (1) 50 Cr–50

Ni; (2) 308, 310, and 446 stainless steel and Inconel 793; (3) Inconel 601 and Incoloy 800; and (4) 304 and 316 stainless steel and Inconel 600. (The last group was found to have undergone considerable corrosion.)

A possible compatibility problem that may significantly affect the reliability and durability of tube materials in fluidized-bed coal gasification systems is erosion. Experience with nonpressurized fluidized-bed combustion systems indicates that gas velocities between 2 and 10 fps are required to maintain a fluid bed. Therefore, heat exchanger tubes embedded in a fluidized bed would be exposed to coal, char, and ash particles traveling at these velocities. Note that significantly higher gas velocities can be expected in the product gas piping. Under these conditions, protective surface films can be destroyed by the erosive action, exposing the material to the hostile environment.

At this time, no experimental data are available regarding the erosion-corrosion process in gasification systems. In an effort to correct the situation, EPRI has established a program in which surveillance coupons will be placed in currently operating fluidized-bed systems.[72] In addition, Argonne National Laboratory, IITRI, the National Bureau of Standards, and the University of California, Berkeley, are currently assembling test apparatus for the screening of candidate materials under erosion-corrosion conditions similar to those anticipated in coal-conversion systems.

Nickel-chromium alloys have been observed to undergo severe internal oxidation in service.[73] In these cases, the alloys become brittle, and the resulting fracture surface appears dark green. This form of attack has occurred primarily at temperatures of 1200° to 1800°F in marginally oxidizing atmospheres where chromium is oxidized and nickel is reduced. In addition, this internal oxidation tends to occur only in combination with carburization or sulfidation corrosion. In the petrochemical industry, this form of attack is often observed in the high-nickel Inconel alloys; however, the presence of 10% to 15% iron appears to arrest the attack.

In view of the encouraging stress rupture properties of molybdenum and molybdenum alloys at temperatures of 1700° to 2000°F, these materials could be considered possible candidates; therefore, their compatibility characteristics will be considered. Vendor data indicate that molybdenum and molybdenum alloys should not be used in oxidizing conditions above 1000°F.[74] This information further suggests that these materials are not affected by CO, CO_2, H_2S, or H_2 at temperatures below 2000°F. The potential for localized variations of conditions (from reducing to oxidizing) in both steam reforming and coal gasification systems makes an assessment of the reliability of molybdenum and molybdenum alloys in these systems difficult.

3.5 Thermochemical Hydrogen Production

Westinghouse has proposed a process for the generation of hydrogen by thermochemical water splitting in which a VHTR will supply both the thermal and electrical energy demands of the process.[3] In this process,

sulfuric acid saturated with SO_2 is pumped through the anodic compartment; acid unsaturated with SO_2 is pumped through the cathodic compartment. Hydrogen is liberated at the cathode, and H_2SO_3 is oxidized to H_2SO_4 at the anode. In the following operation, H_2O is evaporated in the acid preheater from the aqueous H_2SO_4 solution. The concentrated acid is subsequently vaporized in the acid vaporizer and is fed to the decomposition reactor where the SO_3 is decomposed to SO_2 and O_2. Subsequent operations involve the separation of H_2O, SO_2, and O_2. Nuclear heat will be required for the sulfuric acid vaporizer and sulfur trioxide reactor. (Figure 32 is a schematic of the system.)

Although significant compatibility problems exist throughout this process, the purpose of this section is to discuss the VHTR process interfaces. As indicated above, these interfaces occur at the sulfur trioxide reduction reactor and at the sulfuric acid vaporizer.

Operating conditions that have been proposed for these two components[75] are listed in Table 35.

Table 35. Proposed operating conditions for the sulfur trioxide reduction reactor and sulfuric acid vaporizer

Unit	Location	Operating conditions		
		Temperature (°F)	Pressure (psia)	Composition of environment (vol %)
SO_3 reduction reactor	Process stream input	800	55	18% H_2O 82% SO_3
	Process stream output	1600	45	12% O_2 18% H_2O 48% SO_2 22% SO_3
	Helium input	1700	1000	Helium
	Helium output	1100	980	Helium
Acid vaporizer	Process stream input	577	~60	Concentrated H_2SO_4
	Process stream output	800	55	18% H_2O 82% SO_3
	Helium input	900	65	Helium
	Helium output	700	50	Helium

Later estimates indicate that the acid vaporizer components could operate in an environment of concentrated H_2SO_4 at pressures of 50 to 125 psig and temperatures of 150° to 620°F. Generally, materials that could be expected to withstand these conditions are the noble metals — gold, platinum, and tantalum — and high-silicon alloys such as Duriron and Hastelloy D. A discussion of the usefulness of these materials in these process conditions follows.

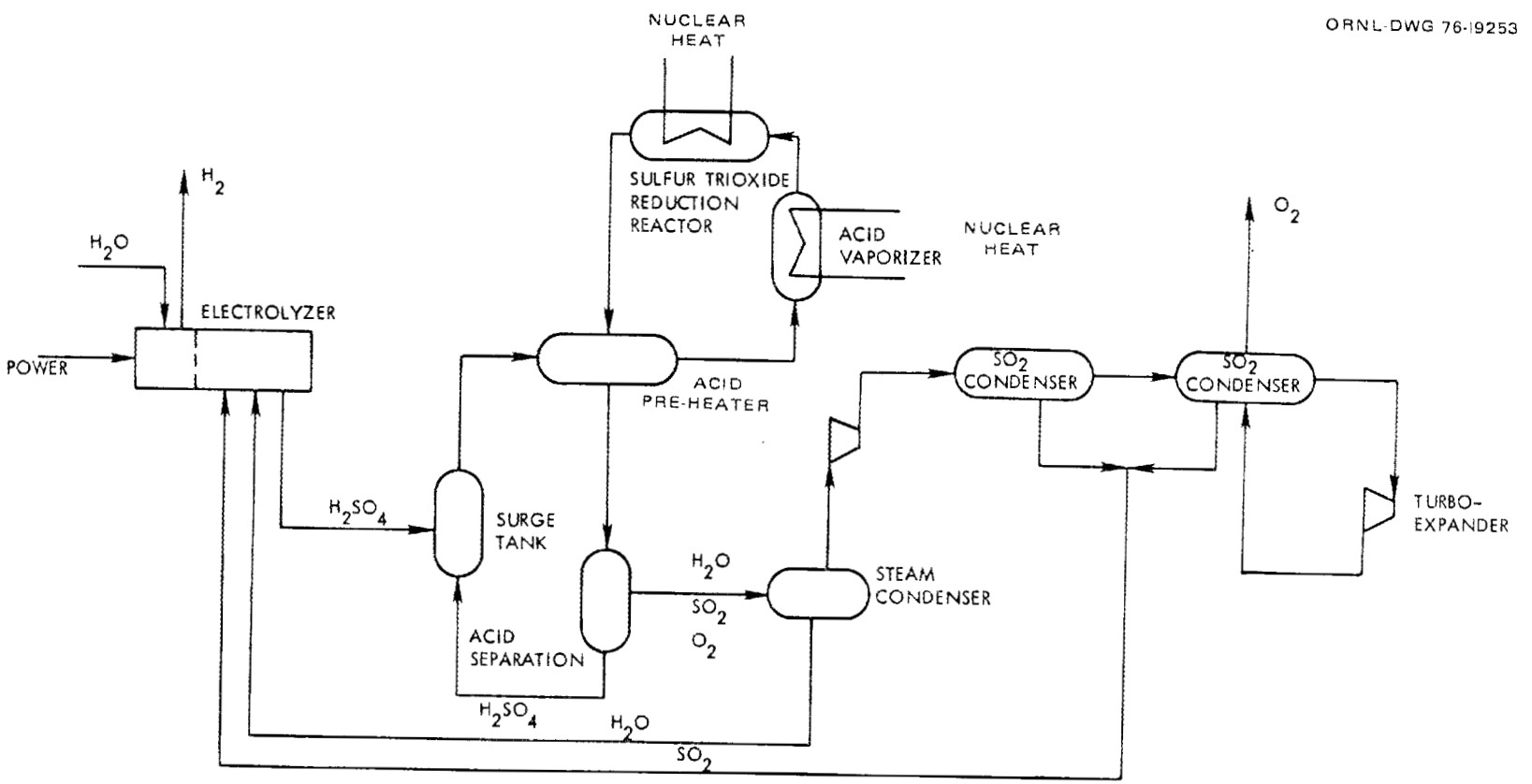

Fig. 32. Sulfur cycle schematic flowsheet.

Obviously, the use of gold, platinum, or tantalum as heat exchanger tubing would be economically prohibitive. Furthermore, the economics of plating or lining a less resistant metal with platinum or gold has been reviewed recently by UE&C.[75] This effort indicated that even a 1-mil-thick coating would be prohibitive at today's prices.

Tantalum, on the other hand, is not as expensive as gold and platinum and is being used by the chemical industry as tube liners for the evaporation of HCl, HNO_3, and H_3PO_4. Although the use of tantalum is limited by its susceptibility to hydrogen embrittlement at temperatures above 750°F, this should not be a restriction in the thermochemical hydrogen process. Therefore, a careful economic analysis should be made of the potential for using tantalum and tantalum alloys as tube liners in the acid vaporizer.

The next group of potential candidate materials is those utilizing the corrosion resistance of silicon. One candidate from this group is Duriron, a 14.5% silicon, 85% iron castable alloy. Vendor data suggest that corrosion rates for Duriron in 80% H_2SO_4 at temperatures up to 430°F are below 1 mil per year. In addition, corrosion rates less than 1 mil per year were observed in 98.3% H_2SO_4 at temperatures as high as 640°F. These data further show that sulfur dioxide dissolved in either water or sulfuric acid corrodes Duriron at a rate of 1000 mils per year; however, the addition of 4.5% chromium to Duriron reduces this corrosion rate to 4 mils per year. With the chromium addition, the alloy is sold as Durichlor 51 or Superchlor. A summary of the nominal composition and properties of Duriron and its related alloys is listed in Tables 36 and 37. A review of the properties reveals that these materials have several significant limitations with regard to mechanical properties and thermal shock characteristics. Because of the brittleness of this material, operation at differential pressures in excess of 50 psi is not recommended. Furthermore, Duriron castings are virtually unmachinable and can be welded only with difficulty. At present, Duriron can be cast only into 1-in. x 3-ft tubes or into 1/2-in. x 6-ft x 8-ft sheets; therefore, use of this material in a conventional shell-and-tube heat exchanger is not practical. United Engineers and Constructors, however, has recommended the use of this material in plate-type heat exchangers.

Table 36. Nominal composition of Duriron-type alloys and of Hastelloy D

	Alloy (%)			
Element	Duriron	Durichlor 51	Superchlor	Hastelloy D
Silicon	14.5	14.5	14.5	8.5 to 10.0
Carbon	0.85	0.85	0.85	0.12
Manganese	0.65	0.65	0.65	0.5 to 1.25
Chromium		4.50	4.50	1.0
Iron	Balance	Balance	Balance	2.0
Cobalt				1.5
Copper				2.0 to 4.0

Table 37. Nominal properties of Duriron-type alloys and of Hastelloy D

Property	Alloy			
	Duriron	Durichlor 51	Superchlor	Hastelloy D
Tensile strength, psi	16,000	16,000	29,000	115,000
Elongation, %	0	0	0	1
Reduction of area, %	0	0	0	1
Hardness, Brinell	520	520	520	360
Compression strength, psi	100,000	100,000	100,000	
Specific gravity	7.0	7.0	7.0	7.8
Melting point, °F	2,300	2,300	2,300	2,065 to 2,220

Despite these numerous limitations, Duriron-type materials continue to be used in the chemical processing industry. With regard to the thermochemical hydrogen process, the Durichlor 51 material should be considered a candidate material for the acid vaporizer.

Hastelloy D is another high-silicon alloy (10% Si) which appears to be a candidate for use in the acid vaporizer. A review of the corrosion resistance of Hastelloy D in sulfuric acid (Table 38) reveals that this material is resistant to the acid at all concentrations at temperatures up to the normal boiling point of the acid. The vendor indicates that the alloy develops maximum resistance to corrosion after a six-week exposure.[76] During this period a protective sulfate film is thought to form. Tables 36 and 37 summarize the physical and mechanical properties of Hastelloy D. These data suggest that Hastelloy D may have improved strength and toughness when compared to the Duriron materials. Although Hastelloy D is available as a centrifugal casting, it does not appear to be any easier to weld than Duriron. In view of its availability in tube shapes and improved toughness, Hastelloy D should be considered a candidate for the thermochemical process.

Table 38. Corrosion rates of Hastelloy D in sulfuric acid

Concentration of sulfuric acid (wt %)	Penetration rate (mils/year)			
	Room temperature	150°F	Normal boiling point	Boiling temperature (°F)
2	1	6	4	212
5	1	5	7	212
10	1	5	13	212
25	1	2	9	224
50	1	1	11	264
60	1	6	8	291
77	3	2	29	383
80	1	2	36	395
85	1	2	91	450
90	1	2	191	510
96	1	1	86	604

Table 35 indicates that the SO_3 reduction reactor is currently designed to operate at a helium inlet temperature of 1700°F and with a pressure differential up to 955 psi across the heat exchanger wall. Based on the discussion of the high-temperature load-carrying capability of tube materials for the steam reforming and coal gasification systems,

the proposed operating conditions for the SO_3 reduction reactor do not appear to be realistic. As indicated earlier, 1650° to 1700°F appears to be the upper limit for use of conventional alloys in heat exchangers designed to operate under balanced pressure conditions. Redesign of the SO_3 reduction reaction to operate with a balanced pressure and with an anticipated heat exchanger tube life of five years would make this system more realistic with respect to material strength limitations.

A review of Table 35 further indicates that the heat exchanger tube material within the sulfur trioxide reactor will be exposed to an environment consisting principally of SO_2 and SO_3 and containing lesser concentrations of O_2 and H_2O. Generally, those alloys having the necessary creep strength to be considered for this application will have sufficient levels of nickel and chromium to resist corrosion by the O_2 and H_2O in this environment. However, the SO_2 and SO_3 could have a more significant impact on the corrosion rates of the tube materials. For iron-chromium-nickel alloys, the best corrosion resistance to SO_2 and SO_3 is obtained with high-chromium contents and with nickel levels below 35%. Nickel content in excess of this amount tends to decrease the resistance to sulfur attack. Alloys with 20% chromium or less offer little resistance and are rapidly deteriorated. These criteria suggest that Incoloy 800 is marginally acceptable. Centrifugally cast alloys such as HK40 and Supertherm appear to be good candidates for this application both in terms of corrosion and strength properties.

3.6 Summary

The preceding has been an analysis of the high-temperature load-carrying capability and compatibility characteristics of a cross section of materials which could be considered as PHX tube materials in the steam reforming, steam-coal gasification, and Westinghouse thermochemical hydrogen processes. A summary of significant observations follows.

1. Extrapolation of stress intensity limits for Code Case 1592 materials suggests that design stress allowables for stainless steels at temperatures above 1550°F will be too low to allow reliable long-term use.

2. A revision of the Code to allow designs of components with three- to five-year lifetimes could increase the range of temperature utilization for stainless steels to 1600°F. However, the impact of taking this step for the steam reformer, steam-coal gasifier, and SO_3 reduction reactor may be economically unacceptable.

3. Due to the wide variation in extrapolations of stress rupture properties for solid-solution nickel alloys and centrifugally cast materials at the proposed process operating temperatures, an assessment of the maximum temperature at which these materials can be used reliably cannot be made at this time.

4. In the proposed steam reformer environment, catastrophic failure of the PHX tube material by carburization and metal dusting is possible. The use of catalyst tube materials having high levels of nickel and silicon (i.e., HK40) has reduced the frequency of this type of failure in the petroleum industry.

5. Erosion and sulfidation effects are expected to influence the service life of PHX tube materials in the steam-coal gasification process. Currently, however, no experimental data are available to allow an assessment of the effect of erosion in this process. Preliminary sulfidation experiments conducted at IITRI suggest that, of the candidate materials being considered, 310 and 314 stainless steel, Inconel 601, and Incoloy 800 are more resistant to sulfidation than are 304 and 316 stainless steel and Inconel 600.

6. Heat exchanger materials in the acid vaporizer component of the Westinghouse thermochemical process are expected to be in an environment of concentrated sulfuric acid at temperatures of 620° to 800°F. Gold and platinum could be used to resist corrosion in this environment, but the cost of these materials makes their use prohibitive; thus, tantalum is more attractive. High-silicon alloys such as Duriron and Hastelloy D may have sufficient corrosion resistance, but their poor fabrication and low ductility suggest marginal use in this application.

REFERENCES

1. General Atomic Company, *High-Temperature Nuclear Heat Source Study*, GA-A13158, Dec. 30, 1974.

2. General Electric Company, *The VHTR for Process Heat (Draft)*, vols. I and II, GEAP-14018, September 1974.

3. Westinghouse Astronuclear Laboratory, Westinghouse Electric Corporation, *The Very High Temperature Reactor for Process Heat*, WANL-2445-1, December 1974.

4. I. Spiewak et al., *Assessment of Very High Temperature Reactors in Process Applications*, ORNL/TM-5242, Oak Ridge National Laboratory, Oak Ridge, Tenn., November 1976.

5. Office of the Minister für Wirtschaft, Mittelstand und Verkehr des Landes Nordrhein-Westfalen, Dusseldorf, *Gasification of Coal with Nuclear Process Heat*, translated by R. G. Mansfield, ORNL/tr-4002, Oak Ridge National Laboratory, Oak Ridge, Tenn., July 1974.

6. Stone & Webster and General Atomic Company, *Final Report — Application Study of a Nuclear Coal Solution Gasification Process for Oklahoma Coal*, vols. I and II, OCR-RDR-86, May 1972.

7. General Atomic Company, *Studies of the Use of High-Temperature Nuclear Heat from a HTGR for Hydrogen Production*, GA-A13391, prepared under contract for NASA, Sept. 30, 1975.

8. J. J. Williams et al., *Evaluation of a Coal Liquefaction Process Using Either a Nuclear or Fossil Heat Source*, UE&C/UCC-760223, United Engineers & Constructors, February 1976.

9. *GA HTGR Concept for 1600°F Process Temperature*, ERDA/NASA Information Meeting, Use of VHTR for Process Heat, Washington, D.C., June 6, 1975.

10. H. Juentgen et al., "Kinetics, Heat Transfer, and Engineering Aspects of Coal Gasification with Steam Using Nuclear Heat," session III of British Nuclear Energy Society International Conference, *The High Temperature Reactor and Process Applications*, November 1974, London, p. 12.

11. K. H. Van Heek, H. Juentgen, and W. Peters, "Fundamental Studies on Coal Gasification in the Utilization of Thermal Energy from Nuclear High Temperature Reactors," *J. Inst. Fuel*, pp. 249-58 (June 1973).

12. A. M. Squires, "Steam-Oxygen Gasification of Fine Sizes of Coal in a Fluidized Bed at Elevated Pressure," Parts I-III, *Trans. Inst. Chem. Eng.* 39 (1961).

13. S. P. Chauhan et al., *(Hydro) Gasification of Battelle Treated Coal (BTC)*, 1975.

14. C. Y. Wen and O. C. Abraham, "A Kinetic Study of the Reaction of Coal Char with Hydrogen-Steam Mixtures," *Fuel Gasification, Advances in Chemistry*, Series G9, American Chemical Society, 1969.

15. J. D. Blackwood and F. McGrary, "The Carbon-Steam Reaction at High Pressure," *Aust. J. Chem.* 11: 16 (1958).

16. H. C. Hottel and J. B. Howard, *New Energy Technology*, MIT Press, Cambridge, Mass., 1971.

17. C. G. Von Fredersdorff and M. A. Elliott, "Coal Gasification," Chap. 20 in *Chemistry of Coal Utilization*, H. H. Lowry, ed., suppl. vol., John Wiley & Sons, Inc., New York, 1963.

18. Personal communication, John E. Jones, Oak Ridge National Laboratory, Oak Ridge, Tenn., February 1976.

19. J. J. Williams et al., *Evaluation of a Coal Liquefaction Process Using Either a Nuclear or Fossil Heat Source*, UE&C/UCC-760223, February 1976, pp. 27-28.

20. California Institute of Technology, Jet Propulsion Laboratory, *Hydrogen Tomorrow: Demands and Technology Requirements, Review Draft*, 5040-1, Oct. 30, 1975.

21. Westinghouse Astronuclear Laboratory, *Studies of the Use of Heat from High Temperature Nuclear Sources for Hydrogen Production Processes (Draft Final Tasks I and II Report)*, NAS 3-18934, July 1975.

22. Institute of Gas Technology, *Survey of Hydrogen Production and Utilization Methods, vol. 1, Executive Summary*, NAS 8-30757, prepared for NASA, Huntsville, Alabama, August 1975.

23. M. G. Bowman, "Fundamental Aspects of Systems for the Thermochemical Production of Hydrogen from Water," p. 251 in *Proceedings of First National Topical Meeting on Nuclear Process Heat Applications, Los Alamos, New Mexico, October 1-3, 1974*, LA-5795-C, November 1974.

24. Personal communication, C. E. Bamberger and J. Braunstein to I. Spiewak, Oak Ridge National Laboratory, Oak Ridge, Tenn., June 16, 1975.

25. Institute of Gas Technology, *A Preliminary Systems-Engineering Study of an Advanced Nuclear-Electrolytic Hydrogen Production Facility*, NAS 8-30757, prepared for NASA Marshall Space Flight Center.

26. D. M. Mitsak and J. F. Kamody, "Koppers-Totzek: Take a Long Hard Look," p. 36 in *Proceedings of Second Annual Symposium on Coal Gasification, Liquefaction, and Utilization: Best Prospects for Commercialization, Pittsburgh, Pennsylvania, August 5-7, 1975.*

27. General Electric Company, *The VHTR for Process Heat,* vol. I, GEAP-14018, September 1974, pp. 1-15.

28. Dow Chemical Company, *New Energy Sources for Process Heat,* report to the National Science Foundation, June 1975, p. 68.

29. National Petroleum Council, *U.S. Energy Outlook: Coal Availability,* 1973, Appendix O, pp. 249-87.

30. J. C. Gillis et al., *Survey of Hydrogen Production and Utilization Methods,* vol. 2, Institute of Gas Technology, August 1975, pp. 343-76.

31. Llewellyn King, ed., *Weekly Energy Report,* July 15, 1974, pp. 6-7.

32. W. G. Dupree, Jr., and J. S. Corsentino, *United States Energy Through the Year 2000 (Revised),* U.S. Department of the Interior, Bureau of Mines, December 1975.

33. United Engineers & Constructors Inc., *An Evaluation of Pollution and Water Consumption by Selected Coal Conversion Processes,* February 1976.

34. D. J. Blickwede and T. F. Barnhart, "The Use of Nuclear Energy in Steelmaking — Prospects and Plans," *Proc. First National Topical Meeting on Nuclear Process Heat Applications, Los Alamos, New Mexico, October 1-3,* LA-5795-C, November 1974, p. 169.

35. American Iron and Steel Institute, *Planning Document — A Materials Evaluation and Testing Program for the VHTR/Reformer Process Heat System,* American Iron and Steel Institute, Washington, D.C., submitted to Energy Research and Development Administration, May 1975.

36. American Iron and Steel Institute, *Report of the Concepts Working Group of the AISI Task Force on Nuclear Steelmaking,* American Iron and Steel Institute, August 1975.

37. R. N. Quade, Chairman, General Atomic, *Report of the Reformer Working Group of the HTGR Nuclear Steelmaking Group,* August 1975.

38. D. J. Blickwede, *Nuclear Steelmaking — Prospects in the USA* (Bethlehem Steel Company) transmitted to Association of Iron and Steel Engineers, September 22, 1975.

39. T. F. Barnhart, Chairman, U.S. Steel Corporation, *Report of the Technical and Economic Evaluation Working Group*, September 1975.

40. J. J. Williams and J. B. Newman, *Engineering Evaluation of Process Heat Applications for Very High Temperature Nuclear Reactors*, UE&C-ERDA-750630 (Revised), February 1976.

41. H. Murata, "Design and Development of an HTGR for Multi-Purpose Utilization in Japan, Japan Atomic Energy Research Institute, *Proc. First National Topical Meeting on Nuclear Process Heat Applications, Los Alamos, New Mexico, October 1974*, LA-5795-C, November 1974, p. 136.

42. J. Huntsinger et al., *Process Heat in Petroleum Refinery Applications — Final Report*, GA-A13406 (Revised), General Atomic Company, February 1976.

43. Resource Analysis and Management Group, *An Evaluation of the Very High Temperature Reactor (VHTR) as an Energy Source for Tar Sand and Oil Shale Recovery and Processing*, Resource Analysis and Management Group, Oklahoma City, prepared for Oak Ridge National Laboratory, June 1975.

44. R. E. Hanneman et al., *Closed Loop Chemical Systems for Energy Transmission, Conversion and Storage*, 74CRD-211, General Electric Company, September 1974.

45. R. Schulton et al., *Chemical Latent Heat for Transport of Nuclear Energy Over Long Distances*, BNES International Conference, November 1974.

46. J. G. Delene, personal communication with E. C. Fox, Oak Ridge National Laboratory, February 1976.

47. Federal Energy Administration, *Project Independence*, November 1974.

48. *Energy Research and Development Administration, A National Plan for Energy Research Development and Demonstration: Creating Energy Sources for the Future*, vol. 1, *The Plan*, ERDA-48, June 1975.

49. M. H. Lietzke, personal communication with L. C. Fuller, E. C. Fox, Oak Ridge National Laboratory, Oak Ridge, Tenn., November 1975.

50. K. Kugeler et al., *The Pebble Bed High Temperature Reactor as A Source of Nuclear Process Heat*, vol. 4, a common study by Kernforschunganlage, Julich, Germany and the General Electric Company, August 1974.

51. United Engineers and Constructors, *770 MWe Central Station Power Plants Investment Cost Study*, vol. V, *High Temperature Gas-Cooled Reactor Plant*, USAEC Report WASH-1230 (vol. I), 1973.

52. American Gas Association, *A Hydrogen Energy System*, August 1972.

53. *CONCEPT — A Computer Code for Conceptual Cost Estimates of Steam-Electric Power Plants*, Phase IV User's Manual, ERDA-108.

54. F. Abidi, "Pipeline System Costs Estimated," *Oil Gas J.* 99 (October 13, 1975).

55. *ORCOST II — A Computer Code for Estimating the Cost of Power from Steam Electric Power Plants*, ERDA-76-38.

56. D. W. Allen and W. H. Yen, "Methanator Design and Operation," *Chem. Eng. Prog.* 69(1): 75-79 (January 1973).

57. E. G. Bohlman, *Heat Transfer Salt for High Temperature Steam Generation*, ORNL/TM-377 Oak Ridge National Laboratory, Oak Ridge, Tenn., December 1972.

58. H. P. Voznick and V. W. Uhl, "Molten Salt Heat for Heat Transfer," *Chem. Eng.* 70: 129 (May 27, 1963).

59. A. A. Bruhn, "Capital Costs Trimmed by 20% by Heat Transfer Process," *Chem. Process.* 33(8): 15-30 (August 1970).

60. J. Freedman and A. A. Bruhn, "Diluted Salt Transfers Heat," *Oil Gas J.* 76 (1970).

61. E. I. duPont de Nemours and Company, *DuPont Hitec*[R] *Heat Transfer Salt*, E. I. duPont de Nemours and Company, Explosives Department, Chemical Products Sales Division, Wilmington, Deleware.

62. American Hydrotherm Corporation, *Hydrotherm Molten Salt Heat Transfer System*, American Hydrotherm Corporation, 470 Park Avenue, South, New York, N.Y.

63. V. W. Uhl and H. P. Voznick, "High Temperature Heating Media," *Chem. Eng. Prog.* 59(5): 33 (May 1963).

64. Rudolf Schulten and Kurt Kugeler, "Coal Gasification and Other Nuclear Process Heat Applications," *Proceedings of First National Topical Meeting on Nuclear Process Heat Applications, Los Alamos, N.M., Oct. 1-3, 1974*, LA-5795, November 1974, p. 210.

65. The American Iron and Steel Institute, *Planning Document — A Materials Evaluation and Testing Program for the VHTR/Reformer Process Heat System*, Washington, D.C. (submitted to ERDA, May 1975).

66. Huntington Alloy Products Division, *Huntington Alloys Technical Bulletin*, Huntington, W. Va.

67. F. N. Mazandarany, *Effects of Elevated Temperature Exposure to a Simulated HTGR Primary Coolant Environment on Several Unstressed Austenitic Alloys*, General Atomic, GA-A13462, August 1975.

68. D. S. Wood, M. Farrow, and W. T. Burke, "A Preliminary Study of the Effect of Helium Environment on the Creep and Rupture Behavior of Type 316 Stainless Steel and Incoloy 800," *Effects of Environment on Material Properties in Nuclear Systems, British Nuclear Energy Society Conference on Corrosion*, 1971, pp. 213-20.

69. I. Koszman, "Factors Affecting Catastrophic Carburization (Metal Dusting)," *Proc. High Temperature Gas-Metal Reaction in Mixed Environments*, AIME, May 9-10, 1972.

70. USS Engineers and Consultants, Inc., *Clean Coke Process — Summary of Bench Scale Studies*, Interim Report for March 1972-April 1974, USS-INT-001.

71. Vern Hill, Materials Properties Council Mtg., Illinois Institute of Technology Research Institute, August 1975.

72. Electric Power Research Institute, *Technical Division Progress Report, Fossil Fuel and Advanced Systems Division*, Palo Alto, Calif., July 1975.

73. F. S. Lang and H. R. Copson, "Some Experiments on Internal Oxidation of Ni-Cr Alloys," *Corrosion* 15: 196 (1959).

74. J. Z. Briggs and M. G. Manzone, *Less Common Alloys of Molybdenum*, Technical Bulletin, Climax Molybdenum Company, 1962.

75. Conversation with D. M. Axelrod, United Engineers and Constructors Inc., Philadelphia, Pa., November 1975.

76. Cabot-Stellite Division of Cabot Corporation, "Technical Bulletin (Alloy Production)," 1974.

INTERNAL DISTRIBUTION

1. T. D. Anderson
2. S. Baron
3. J. H. Coobs
4. R. H. Cooper
5. W. E. Cooper
6. F. L. Culler
7. J. G. Delene
8. J. R. DiStefano
9. W. P. Eatherly
10. M. S. Edwards
11. J. R. Engel
12. G. G. Fee
13. E. C. Fox
14. L. C. Fuller
15. W. R. Gambill
16. M. J. Goglia
17. J. F. Harvey
18. H. W. Hoffman
19. F. J. Homan
20. J. E. Jones, Jr.
21. P. R. Kasten
22. O. H. Klepper
23. M. Levenson
24. C. C. Littlefield
25. R. E. MacPherson
26. A. P. Malinauskas
27. W. J. McCarthy, Jr.
28. J. P. Nichols
29. H. Postma
30. M. W. Rosenthal
31. T. H. Row
32. M. D. Silverman

33-125. I. Spiewak

126. J. J. Taylor
127. D. B. Trauger
128. G. D. Whitman
129. W. J. Wilcox
130. ORNL Patent Office

131-132. Central Research Library

133. Document Reference Section

134-135. Laboratory Records Department

136. Laboratory Records (RC)

EXTERNAL DISTRIBUTION

137. Director, Division of Fossil Energy Research, ERDA, Washington, D.C. 20545
138. Assistant Administrator for Fossil Energy, ERDA, Washington, D.C. 20545
139. Director, Division of Coal Conversion and Utilization, ERDA, Washington, D.C. 20545
140. Mayo Carrington, Division of Coal Conversion and Utilization, ERDA, Washington, D.C. 20545
141. R. E. Vener, Division of Coal Conversion and Utilization, ERDA Washington, D.C. 20545
142. Fred Witmer, Division of Coal Conversion and Utilization, ERDA, Washington, D.C. 20545
143. Director, Division of Nuclear Research and Applications, ERDA, Washington, D.C. 20545
144. T. Beresovski, Division of Nuclear Research and Applications, ERDA, Washington, D.C. 20545

145. D. E. Erb, Division of Nuclear Research and Applications, ERDA, Washington, D.C. 20545
146. K. O. Laughon, Division of Nuclear Research and Applications, ERDA, Washington, D.C. 20545
147. J. C. Montgomery, Division of Nuclear Research and Applications, ERDA, Washington, D.C. 20545
148. R. G. Oehl, Division of Nuclear Research and Applications, ERDA, Washington, D.C. 20545
149. J. H. Swisher, Division of Conservation Research and Technology, ERDA, Washington, D.C. 20545
150. A. T. McMain, General Atomic Co., P.O. Box 81608, San Diego, Calif. 92138
151. R. N. Quade, General Atomic Co., P.O. Box 81608, San Diego, Calif. 92138
152. G. H. Farbman, Westinghouse Electric Corp., Astronuclear Laboratory, P.O. Box 10864, Pittsburgh, Pa. 15236
153. A. R. Jones, Westinghouse Electric Corp., Astronuclear Laboratory, P.O. Box 10864, Pittsburgh, Pa. 15236
154. A. E. Kakretz, General Electric Co., Fairfield, Conn. 06431
155. O. G. Woike, General Electric Co., P.O. Box 15132, Cincinnati, Ohio 45215
156. J. H. Crowley, United Engineers & Constructors, 1401 Arch St., Philadelphia, Pa. 19105
157. J. B. Newman, United Engineers & Constructors, 1401 Arch St., Philadelphia, Pa. 19105
158. D. J. Blickwede, Bethlehem Steel Corp., Bethlehem, Pa. 18016
159. T. F. Barnhart, U.S. Steel Corp., 125 Jamison Lane, Monroeville, Pa. 15146
160. H. W. Paxton, U.S. Steel Corp., 125 Jamison Lane, Monroeville, Pa. 15146
161. R. W. Wendes, Amoco Oil Co., Box 6110A, Chicago, Ill. 60680
162. D. C. Azbill, Shell Oil Co., One Shell Plaza, P.O. Box 2463, Houston, Tex. 77001
163. F. M. Richmond, Universal-Cyclops, 650 Washington Rd., Pittsburgh, Pa. 15228
164. Derek Gregory, Institute of Gas Technology, 3424 South State St., Chicago, Ill. 60616
165. R. J. Jiacoletti, Los Alamos Scientific Laboratory, P.O. Box 1663, Los Alamos, N.M. 87544
166. Donald Bogart, National Aeronautics and Space Administration, 6390 Nelwood Rd., Cleveland, Ohio 44135
167. D. R. Stone, National Aeronautics and Space Administration, Washington, D.C. 20546
168. Jack G. Connors, Battelle-Columbus Laboratory, 505 King Ave., Columbus, Ohio 43201
169. F. E. Faris, Interdevelopment, Inc., Suite 1014, Rutherford B. Hayes Bldg., 2361 S. Jefferson Davis Hwy., Arlington, Va. 22202
170. Seymour Alpert, Electric Power Research Institute, 3412 Hillview Ave., Palo Alto, Calif. 94304

171. A. Flowers, American Gas Association, 1515 Wilson Blvd., Arlington, Va. 22209
172. W. C. Helt, National Coal Association, 1103 17th St., NW, Washington, D.C. 20036
173. W. W. Talley, Resource Analysis & Management Group, 2500 First National Center, Oklahoma City, Okla. 73102
174. Don Crego, Gilbert Associates, 525 Lancaster Ave., Reading, Pa. 19603
175. M. Steinberg, Brookhaven National Laboratory, Upton, N.Y. 11973
176. Engineering Technology Division, ORO, Oak Ridge, Tenn. 37830
177. Research and Technical Support Division, ORO, Oak Ridge, Tenn. 37830

178-204. Technical Information Center, Oak Ridge, Tenn. 37830

☆ U.S. GOVERNMENT PRINTING OFFICE: 1977-748-189/64