OAK RIDGE NATIONAL LABORATORY LIBRARIES

3 4456 0550914 3

ORNL-TM-5144

Cy 56

INGRES: A Computer Code for the Rate of Air Ingress Into an HTGR Following a Design-Basis Depressurization Accident

R. L. Reid
J. P. Sanders

OAK RIDGE NATIONAL LABORATORY
CENTRAL RESEARCH LIBRARY
DOCUMENT COLLECTION
LIBRARY LOAN COPY
DO NOT TRANSFER TO ANOTHER PERSON
If you wish someone else to see this document, send in name with document and the library will arrange a loan.

OAK RIDGE NATIONAL LABORATORY
OPERATED BY UNION CARBIDE CORPORATION • FOR THE U.S. ATOMIC ENERGY COMMISSION

Printed in the United States of America. Available from
National Technical Information Service
U.S. Department of Commerce
5285 Port Royal Road, Springfield, Virginia 22161
Price: Printed Copy $5.00; Microfiche $2.25

This report was prepared as an account of work sponsored by the United States Government. Neither the United States nor the Energy Research and Development Administration, nor any of their employees, nor any of their contractors, subcontractors, or their employees, makes any warranty, express or implied, or assumes any legal liability or responsibility for the accuracy, completeness or usefulness of any information, apparatus, product or process disclosed, or represents that its use would not infringe privately owned rights.

ORNL-TM-5144

Contract No. W-7405-eng-26

Reactor Division

INGRES: A COMPUTER CODE FOR THE RATE OF AIR INGRESS INTO AN HTGR FOLLOWING A DESIGN-BASIS DEPRESSURIZATION ACCIDENT

R. L. Reid
J. P. Sanders

Work performed for the U.S. Nuclear Regulatory Commission under Interagency Agreement 40-494-75.

DECEMBER 1975

NOTICE: This document contains information of a preliminary nature and was prepared primarily for internal use at the Oak Ridge National Laboratory. It is subject to revision or correction and therefore does not represent a final report.

OAK RIDGE NATIONAL LABORATORY
Oak Ridge, Tennessee 37830
operated by
UNION CARBIDE CORPORATION
for the
U.S. ENERGY RESEARCH AND DEVELOPMENT ADMINISTRATION

OAK RIDGE NATIONAL LABORATORY LIBRARIES

3 4456 0550914 3

CONTENTS

Page

FOREWORD v
ABSTRACT 1
INTRODUCTION 1
DESCRIPTION OF THE DBDA PROCESS 2
COMPUTATIONAL MODEL 4
Free Convection Loop 4
Expansion-Contraction Process and CO Formation 6
RESULTS FROM THE MODEL 7
Summit and Fulton HTGRs 7
Comparison with GAC Results 11
CONCLUSIONS 14
REFERENCES 15
APPENDIX 17

FOREWORD

The computer program described in this report was written by R. L. Reid while he was a temporary summer employee at ORNL. His permanent position at the time was on the staff of the Department of Mechanical Engineering at the University of Tennessee. As a consultant during the following academic year, he participated in review meetings concerning the computational techniques and the predicted results from the calculations. The computer code is being maintained at ORNL by J. P. Sanders to be incorporated into a larger accident-analysis computer program.

INGRES: A COMPUTER CODE FOR THE RATE OF AIR INGRESS INTO AN HTGR FOLLOWING A DESIGN-BASIS DEPRESSURIZATION ACCIDENT

R. L. Reid* J. P. Sanders

ABSTRACT

The computer program INGRES was written to calculate the rate of air ingress into the prestressed concrete reactor vessel after a design-basis depressurization accident in a high-temperature gas-cooled reactor. The model includes the free convection loop that can occur in a cold-leg break, the expansion and contraction air exchange mechanisms, and the conversion of oxygen to carbon monoxide. Results are presented for the 2000-MW(t) Summit Power Station and the 3000-MW(t) Fulton Generating Station and are compared to computational results provided by the General Atomic Company. The results agree reasonably well even though some differences exist in the two models.

Key words: Air, confinement, convection, gas coolant, computer program, PCRV.

INTRODUCTION

The High-Temperature Gas-Cooled Reactor (HTGR) Safety Study Program for the Division of Reactor Licensing, U.S. Nuclear Regulatory Commission, was in need of a model to calculate the rate of air ingress into the prestressed concrete reactor vessel (PCRV) following a design-basis depressurization accident (DBDA). General Atomic Company (GAC) had developed a computer code to predict the air ingress rate,[1,2] but it was deemed necessary to develop an independent code to compare the results of both codes and to provide a tool for analysis of any HTGR. The air ingress rates and resultant changes in effective molecular weight of the PCRV gas are particularly important in the design of the core auxiliary cooling system.

---

*Temporary summer employee at ORNL from the staff of the Department of Mechanical Engineering at the University of Tennessee.

DESCRIPTION OF THE DBDA PROCESS

Two types of ruptures in the PCRV are considered: a break around the bottom of the steam generator penetration (point A in Fig. 1) where the hot helium enters the cavity (hot-leg break) or a leak near the top of the cavity (point B in Fig. 1) where the helium has been cooled and is returning to the core (cold-leg break). When the leak is initiated, a blowdown occurs from the PCRV, beginning at the operating pressure (about 700 psia) and ending at some low pressure. The blowdown causes pressure and temperature changes in the containment, which is initially near atmospheric pressure and ambient temperature, for a few minutes until relatively steady-state conditions are reached. The entire PCRV and containment then equilibrate at a pressure of 20 to 30 psia, depending on whether the leak was a hot- or a cold-leg break. The containment temperature at this time is about 100 to 150°F.

These pressure and temperature excursions are described and calculated by the Contempt-G computer program.[3] For the present study, the long-term effects (those up to 6 hr) were of interest; therefore, the containment was assumed to reach the steady-state temperature and pressure instantly.

At least four types of mass transfer processes can occur during the DBDA to alter the effective molecular weight of the gas in the PCRV from a value of 4.00 for pure helium. These are (1) expansions and contractions due to temperature changes in the PCRV, (2) establishment of a free convection loop, (3) reaction of the incoming oxygen with carbon in the reactor to form carbon monoxide, and (4) diffusion.

The free convection loop will only be a possibility with the cold-leg break that occurs at the top of the steam generator. A stable buoyant situation exists with the hot-leg break at the bottom of the PCRV. Diffusion was determined to be negligible under both of these conditions.

In GAC's description of their calculations in Section 5.1.4 of LTR-1 (Ref. 1), they considered points 1 and 2 (see Fig. 1) above the reactor core. Therefore, a cold-leg break was considered, although this was not stated. In conversations with George Malek of GAC, he mentioned that they included the reaction of incoming oxygen with the graphite in the

ORNL–DWG 75–16080

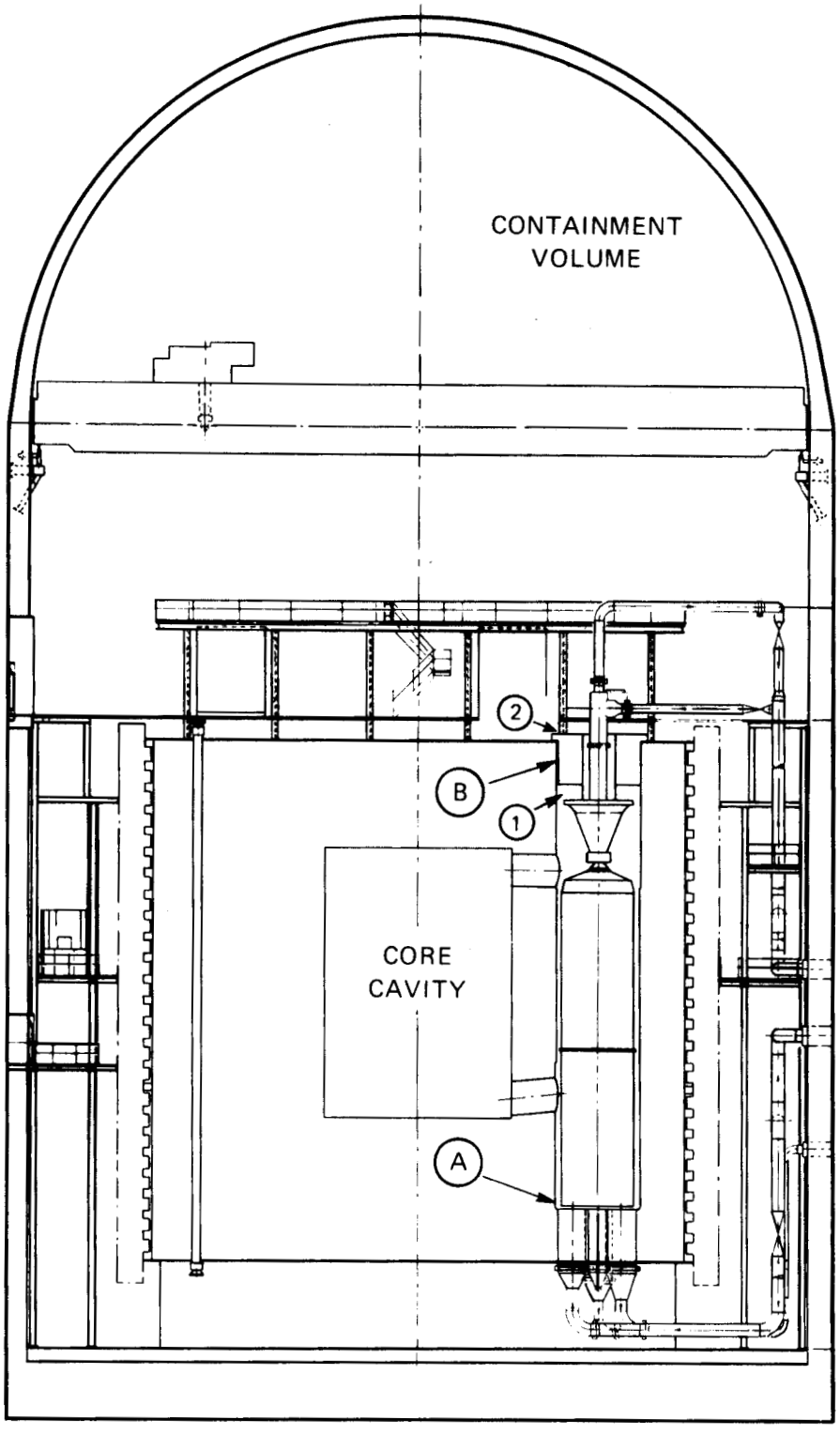

Fig. 1. Diagram of core cavity, steam generator penetration of the PCRV, and the containment structure.

core to form CO; this point is not noted in LTR-1. These conversations actually led to the decision to include this reaction in the model described in this report.

COMPUTATIONAL MODEL

Free Convection Loop

Most of the assumptions used by GAC[1] were also made in this study, including the assumption that the total cross-sectional area available for inflow and outflow is 100 in.^{2}. The height of the buoyant column was taken as 8 ft (the distance from C to D in Fig. 2, which was the effective height of the annular gap). Friction in the column was ignored, because the flow area away from the flow restrictor (point C in Fig. 2) was significantly greater than this minimum flow area. The major inhibitor of flow was assumed to be the entrance and exit losses at the flow restrictor. These were treated as a sudden contraction loss with a loss coefficient about 0.5 and a sudden expansion that can have a loss coefficient as large as 1.0, depending upon the ratio of flow areas. To be conservative (i.e., to overestimate the rate of air ingress), the sum of these two coefficients was assumed to be 1.2, which is the same assumption used by GAC.[1]

In the fundamental equation for the free convection loop, the difference in head produced by the different weights of the columns is balanced by the pressure losses in the flow path. With the assumptions discussed above, the equation is given by

$$K \frac{\rho_C V_C^2}{2} + K \frac{\rho_R V_R^2}{2} = Lg\ (\rho_C - \rho_R)\ , \qquad (1)$$

where

V = velocity,

ρ = density,

K = loss coefficient,

L = height of column,

g = gravitational constant.

Subscripts C and R refer to conditions in the gas mixture in the containment and the PCRV respectively.

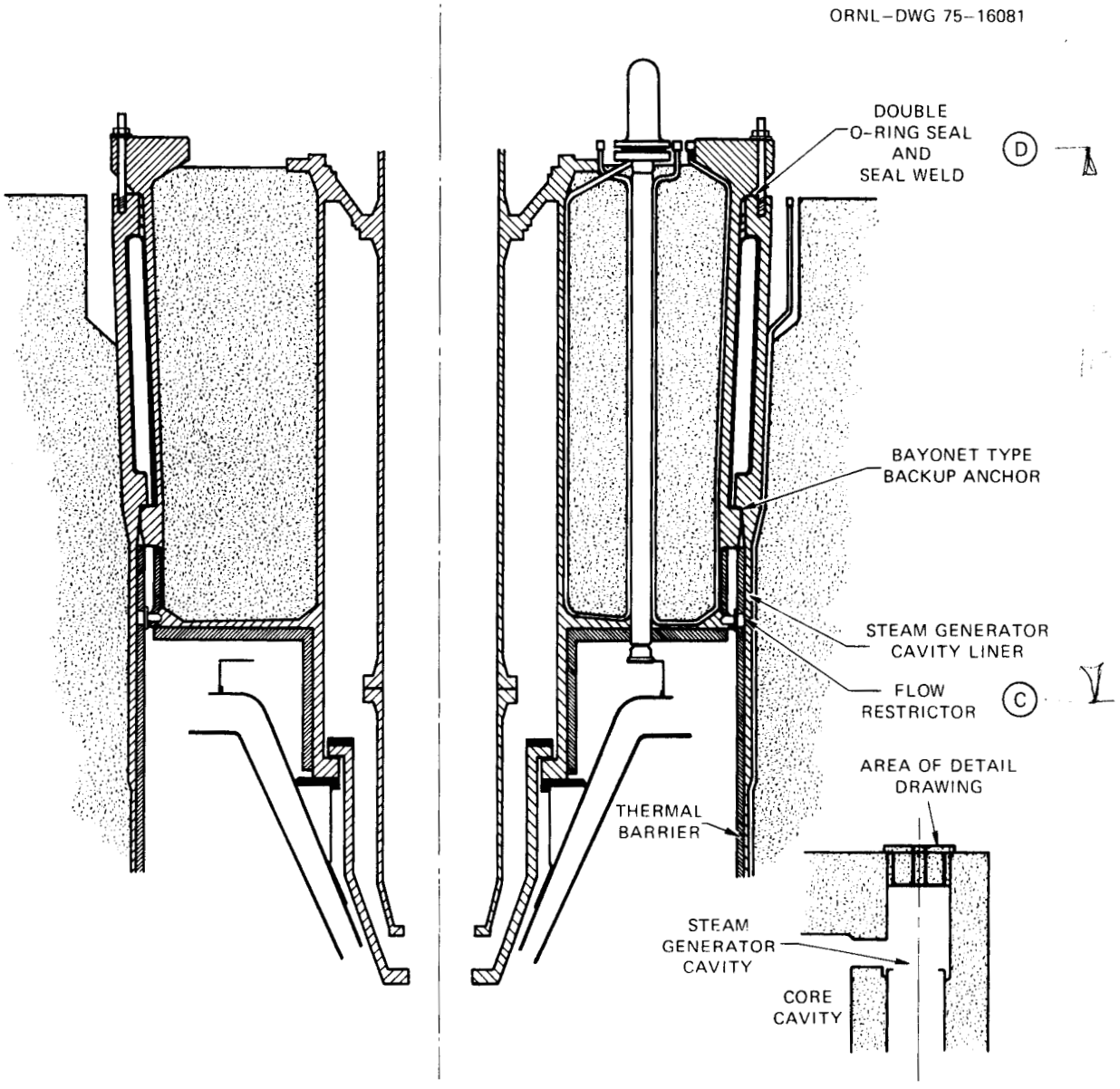

Fig. 2. Detail of closure at top of steam generator cavity showing flow restrictor and annular gap.

If Eq. (1) is converted to the volumetric flow rate Q using the cross-sectional area A it becomes

$$K \frac{\rho_C Q_C^2}{2A_C^2} + K \frac{\rho_R Q_R^2}{2A_R^2} = Lg\ (\rho_C - \rho_R)\ . \tag{2}$$

However, $Q_C = Q_R$, and if the cross-sectional areas for inflow and outflow are assumed to be equal such that $A_C = A_R = A = 50$ in.^{2},

$$Q = A \sqrt{\frac{2Lg\ (\rho_C - \rho_R)}{K\ (\rho_C + \rho_R)}}\ . \tag{3}$$

Transforming this to the mass flow M_R of the outflowing gas, the equation becomes

$$M_R = A \sqrt{\frac{2Lg\ (\rho_C - \rho_R)\ \rho_R^2}{K\ (\rho_C + \rho_R)}}\ . \tag{4}$$

Equation (4) can be used over a time interval Δt to determine the amount of gas leaving the containment.

Expansion-Contraction Process and CO Formation

The expansion-contraction process is essentially an inventory system using the ideal gas law. However, there are several possible sequences of events and conditions that can be hypothesized. The reaction of oxygen with graphite to form CO is also incorporated into the procedure. The reaction is

$$2C + O_2 = 2CO\ . \tag{5}$$

The sequence of events in the expansion-contraction process with chemical reaction proceeds as follows:

1. Equation (4) is first used to calculate the mass of gas mixture leaving the PCRV in the time interval Δt. An equal volume of gas mixture from the containment enters at the containment temperature.

2. The oxygen in the incoming containment gas then reacts to form 2 moles of CO for each mole of O_2.

3. The newly formed CO and the rest of the gas that came from the containment are then heated to the average PCRV temperature.

4. The difference in this expanded volume and the volume of the gas that left the PCRV is then assumed to displace an equal volume of gas from the PCRV to the containment.

5. The new average temperature at the end of the time step is used to calculate a new volume of PCRV gas.

6. If the temperature has increased, the amount of gas that must leave the PCRV to keep the pressure constant is calculated and this amount is removed from the PCRV.

7. If the temperature has decreased, the volume of containment gas that will enter at containment temperature is calculated. The procedure then repeats steps 2 through 4.

8. The entire sequence is repeated starting with step 1.

A complete listing and documentation of the program INGRES is given in the appendix.

RESULTS FROM THE MODEL

Summit and Fulton HTGRs

The computed results for the effective molecular weight of the gas in the PCRV and the helium mole fraction as a function of time are given in Tables 1 and 2 for the 2000- and 3000-MW(t) HTGRs. The input data in the tables were taken from the Summit and Fulton PSARs.[4,5] These transient molecular weight distributions are plotted in Fig. 3.

One interesting feature of the results is that the molecular weight in the PCRV finally exceeds that of the containment. This at first seems impossible until it is remembered that the chemical reaction to form carbon monoxide creates 2 moles of CO (combined molecular weight of 56) for each mole of O_2 (molecular weight of 32). The gas from the PCRV increases in molecular weight as it enters the PCRV and the oxygen is reacted.

Table 1. Composition in PCRV of Summit Station HTGR

CONTAINMENT PRESSURE BEFORE DBDA = 14.7 PSIA
VOLUME OF CONTAINMENT = 2280000. CUBIC FEET
TEMPERATURE OF CONTAINMENT = 565.0 DEG R
MASS OF HELIUM IN PCRV BEFORE DBDA = 14700. LBM $= 1.7 \times 10^6$ gmol
PCRV PRESSURE BEFORE DBDA = 725.0 PSIA
SYSTEM PRESSURE AFTER DBDA = 23.2 PSIA
MAXIMUM CROSS SECTIONAL AREA FOR THE LEAK = 100.0 SQ. IN.
THE LOSS COEFFICIENT FOR COMBINED INLET
AND OUTLET LOSSES FOR EACH COLUMN = 1.2
THE HEIGHT OF THE BUOYANT COLUMN = 8.0 FT
MOLECULAR WEIGHT OF CONTAINMENT
IMMEDIATELY AFTER DBDA IS 19.09 LBM/LB-MOLE

TIME	AVG. COOLANT TEMPS IN	OUT	MOLECULAR WEIGHT	MOLE FRAC HE
(HOURS)	(F)	(F)	(LBM/LB-MOLE)	
0.0	607.	1416.	4.00	1.0000
0.0833	367.	1520.	6.35	0.9019
0.0892	368.	1524.	6.41	0.8994
0.1004	369.	1527.	6.53	0.8946
0.2012	372.	1558.	7.55	0.8521
0.3008	375.	1585.	8.47	0.8137
0.4004	374.	1609.	9.31	0.7786
0.5000	373.	1631.	10.09	0.7464
0.6064	373.	1653.	10.84	0.7150
0.8064	374.	1688.	12.12	0.6618
1.0064	376.	1719.	13.19	0.6171
1.2084	387.	1744.	14.11	0.5789
1.3954	380.	1761.	14.83	0.5487
1.5994	382.	1776.	15.50	0.5207
1.8034	384.	1787.	16.07	0.4969
2.0164	386.	1793.	16.58	0.4759
2.1964	387.	1794.	16.94	0.4608
2.3964	388.	1793.	17.29	0.4463
2.5964	388.	1789.	17.59	0.4339
2.7964	389.	1782.	17.84	0.4233
3.0364	389.	1771.	18.10	0.4125
3.3964	388.	1748.	18.42	0.3992
3.7964	387.	1716.	18.68	0.3883
4.1964	384.	1680.	18.87	0.3803
4.5964	380.	1641.	19.01	0.3744
5.0364	376.	1596.	19.13	0.3697
5.3964	371.	1560.	19.19	0.3669
5.7964	367.	1519.	19.25	0.3645
5.9964	364.	1500.	19.27	0.3636

MOLECULAR WEIGHT OF CONTAINMENT IS NOW 18.92 LBM/LB-MOLE

Table 2. Composition in PCRV of Fulton Station HTGR

CONTAINMENT PRESSURE BEFORE DBDA = 15.7 PSIA
VOLUME OF CONTAINMENT = 2270000. CUBIC FEET
TEMPERATURE OF CONTAINMENT = 560.0 DEG R
MASS OF HELIUM IN PCRV BEFORE DBDA = 20745. LBM
PCRV PRESSURE BEFORE DBDA = 725.0 PSIA
SYSTEM PRESSURE AFTER DBDA = 23.2 PSIA
MAXIMUM CROSS SECTIONAL AREA FOR THE LEAK = 100.0 SQ. IN.
THE LOSS COEFFICIENT FOR COMBINED INLET
AND OUTLET LOSSES FOR EACH COLUMN = 1.2
THE HEIGHT OF THE BUOYANT COLUMN = 8.0 FT
MOLECULAR WEIGHT OF CONTAINMENT
IMMEDIATELY AFTER DBDA IS 17.43 LBM/LB-MOLE

TIME (HOURS)	AVG. COOLANT TEMPS IN (F)	OUT (F)	MOLECULAR WEIGHT (LBM/LB-MOLE)	MOLE FRAC HE
0.0	607.	1416.	4.00	1.0000
0.0833	367.	1520.	6.05	0.9148
0.0892	368.	1524.	6.08	0.9132
0.1004	369.	1527.	6.16	0.9101
0.2012	372.	1558.	6.82	0.8827
0.3008	375.	1585.	7.43	0.8572
0.4004	374.	1609.	8.01	0.8331
0.5000	373.	1631.	8.55	0.8105
0.6064	373.	1653.	9.09	0.7878
0.8064	374.	1688.	10.05	0.7481
1.0064	376.	1719.	10.89	0.7129
1.2084	387.	1744.	11.65	0.6815
1.3954	380.	1761.	12.27	0.6555
1.5994	382.	1776.	12.87	0.6303
1.8034	384.	1787.	13.41	0.6080
2.0164	386.	1793.	13.90	0.5873
2.1964	387.	1794.	14.28	0.5718
2.3964	388.	1793.	14.65	0.5564
2.5964	388.	1789.	14.98	0.5427
2.7964	389.	1782.	15.27	0.5305
3.0364	389.	1771.	15.58	0.5175
3.3964	388.	1748.	15.98	0.5007
3.7964	387.	1716.	16.34	0.4857
4.1964	384.	1680.	16.63	0.4738
4.5964	380.	1641.	16.86	0.4643
5.0364	376.	1596.	17.06	0.4560
5.3964	371.	1560.	17.18	0.4507
5.7964	367.	1519.	17.30	0.4458
5.9964	364.	1500.	17.35	0.4438

MOLECULAR WEIGHT OF CONTAINMENT IS NOW 17.26 LBM/LB-MOLE

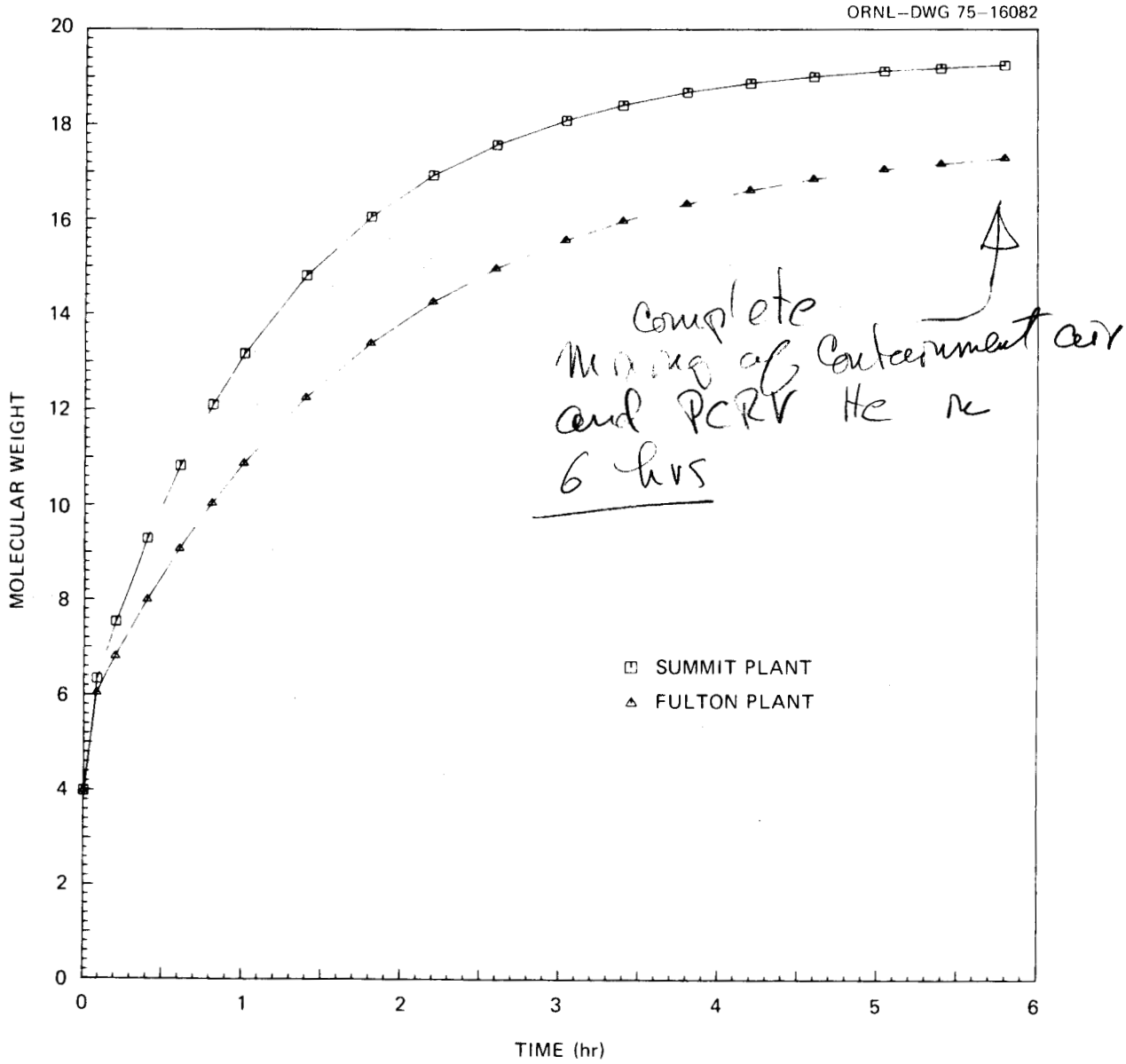

Fig. 3. PCRV composition for Summit [2000-MW(t)] and Fulton [3000-MW(t)] reactors.

Comparison with GAC Results

The actual input data for the results given in the letter[2] from D. S. Duncan were obtained from George Malek and John Peterson of GAC. The GAC results were actually obtained before some of the design conditions for the 2000- and 3000-MW(t) plants were finalized. Consequently, the GAC results, although presented as being generic for both plants, are not exact for either reactor. In addition, LTR-1 (Ref. 1) indicates a column height of 8.0 ft, but these older results were obtained for a column height of 18.5 ft. The results in Table 3 were obtained using input data that seemed to be the same as the GAC data.

Subsequent conversations with John Peterson revealed some differences between the calculational procedures followed in this report and the GAC method. As reported in the LTR,[1] GAC assumed that the total area for leakage (100 in.^{2}) was divided into variable inflow and outflow areas. An equation similar to Eq. (3) then resulted; this equation was differentiated with respect to one of the flow areas, and the derivative was set equal to zero to produce an equation for the area to maximize the flow rate. As discussed earlier, the INGRES results were obtained by assuming a 50-50 split in the flow areas. A more detailed procedure seemed to be unnecessary considering the approximate nature of the rest of the analysis. Mr. Peterson commented that the split to maximize the flow rate was close to the 50-50 mark.

Another difference in the method was that the GAC procedure coupled the free convection loop with the expansion-contraction process. If the outflow due to expansion was greater than the inflow due to free convection, no free convection was allowed to occur. As previously described, the analysis in this report considers the free convection to occur before, and independent of, the expansion-contraction process. This is more conservative and appears to be possible under certain actual local pressure and concentration variations in the PCRV and containment volume.

The results of this model are compared with the results of GAC in Fig. 4. Note that, as discussed, these results seem to be conservative in comparison with the results of GAC. In addition, there may be some slight differences in the two sets of input data. Table 3 presents the computer results for this case.

Table 3. Comparision of values from INGRES with those of GAC

CONTAINMENT PRESSURE BEFORE DBDA = 14.7 PSIA
VOLUME OF CONTAINMENT = 1687000. CUBIC FEET
TEMPERATURE OF CONTAINMENT = 610.0 DEG R
MASS OF HELIUM IN PCRV BEFORE DBDA = 17420. LBM
PCRV PRESSURE BEFORE DBDA = 700.0 PSIA
SYSTEM PRESSURE AFTER DBDA = 23.2 PSIA
MAXIMUM CROSS SECTIONAL AREA FOR THE LEAK = 100.0 SQ. IN.
THE LOSS COEFFICIENT FOR COMBINED INLET
AND OUTLET LOSSES FOR EACH COLUMN = 1.2
THE HEIGHT OF THE BUOYANT COLUMN =18.5 FT
MOLECULAR WEIGHT OF CONTAINMENT
IMMEDIATELY AFTER DBDA IS 15.75 LBM/LB-MOLE

TIME	AVG. COOLANT TEMPS IN	OUT	MOLECULAR WEIGHT	MOLE FRAC HE
(HOURS)	(F)	(F)	(LBM/LB-MOLE)	
0.0	607.	1416.	4.00	1.0000
0.0833	367.	1520.	5.92	0.9201
0.0892	368.	1524.	5.97	0.9179
0.1004	369.	1527.	6.07	0.9137
0.2012	372.	1558.	6.95	0.8770
0.3008	375.	1585.	7.74	0.8443
0.4004	374.	1609.	8.45	0.8146
0.5000	373.	1631.	9.10	0.7876
0.6064	373.	1653.	9.72	0.7615
0.8064	374.	1688.	10.78	0.7177
1.0064	376.	1719.	11.64	0.6815
1.2084	387.	1744.	12.38	0.6510
1.3954	380.	1761.	12.94	0.6273
1.5994	382.	1776.	13.47	0.6056
1.8034	384.	1787.	13.90	0.5874
2.0164	386.	1793.	14.28	0.5716
2.1964	387.	1794.	14.55	0.5604
2.3964	388.	1793.	14.81	0.5497
2.5964	388.	1789.	15.02	0.5407
2.7964	389.	1782.	15.21	0.5331
3.0364	389.	1771.	15.39	0.5254
3.3964	388.	1748.	15.61	0.5162
3.7964	387.	1716.	15.79	0.5087
4.1964	384.	1680.	15.92	0.5034
4.5964	380.	1641.	16.01	0.4996
5.0364	376.	1596.	16.08	0.4967
5.3964	371.	1560.	16.12	0.4950
5.7964	367.	1519.	16.16	0.4935
5.9964	364.	1500.	16.17	0.4930

MOLECULAR WEIGHT OF CONTAINMENT IS NOW 15.58 LBM/LB-MOLE

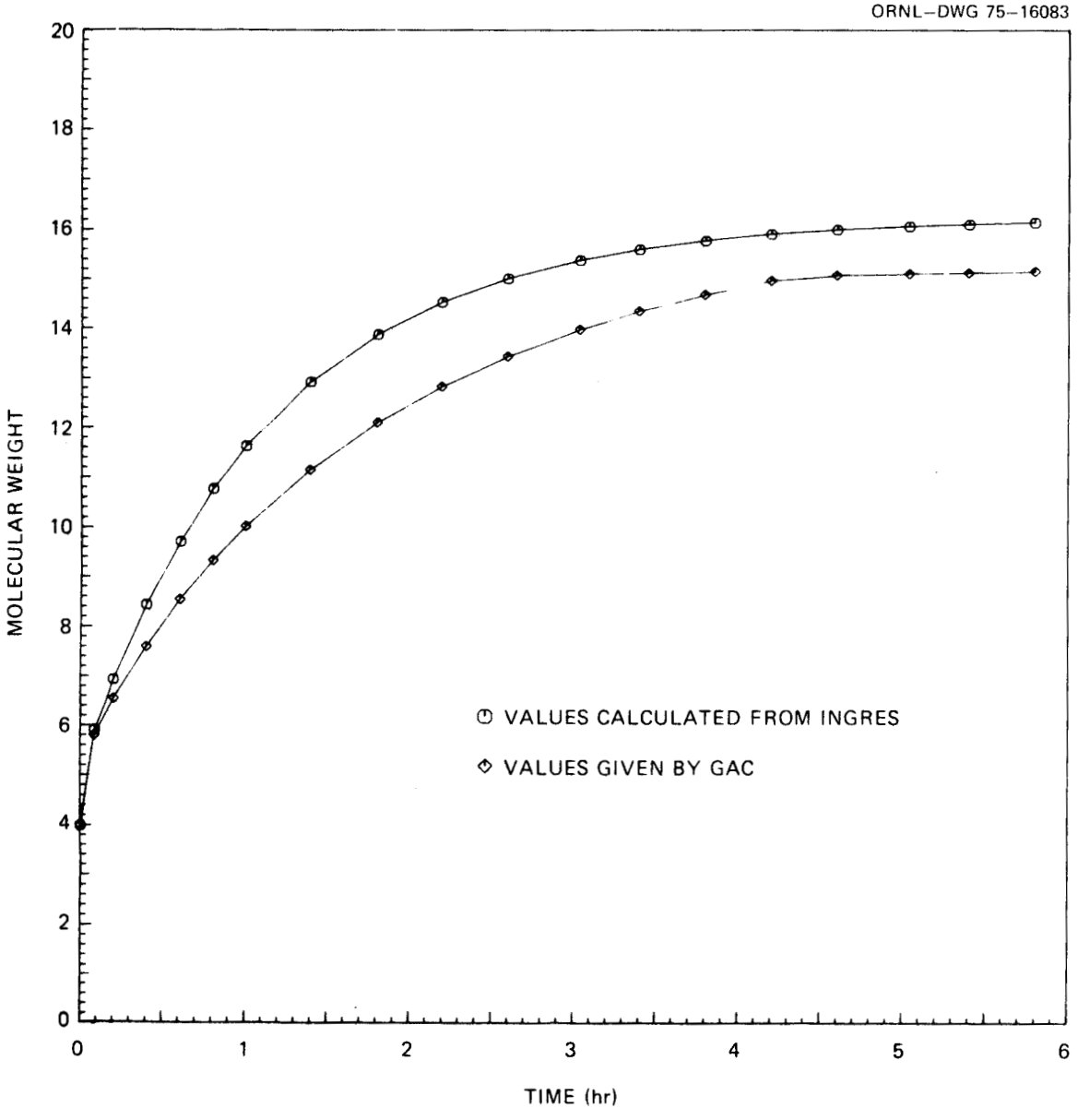

Fig. 4. Comparison of results with GAC.

CONCLUSIONS

The analysis presented in this report seems to give reasonable results for the gas composition of the PCRV as a function of time following a DBDA. The results compare reasonably well with the independent calculations presented by GAC.

REFERENCES

1. An Analysis of HTGR Core Cooling Capability, Gulf General Atomic Report GA-LTR-1 (Mar. 20, 1973).

2. D. S. Duncan, Mgr., Plant Licensing Branch, General Atomic Company, letter to R. A. Clark, Chief, Gas-Cooled Reactor Branch, Directorate of Licensing, USAEC, Washington, D.C. Subject: Answers to Request for Additional Information No. 1 on Licensing Topical Report No. 1 (GA-LTR-1) (Public Docket for Gulf GA-A12504) (Feb. 6, 1974).

3. D. I. Macnab, The Contempt-G Computer Program and Its Application to HTGR Containments, General Atomic Company Report GA-A12692 (GA-LTR-6) (Feb. 1, 1974).

4. Delmarva Power and Light Company, Summit Power Station, Preliminary Safety Analysis Report (1973–1974).

5. Fulton Generating Station, Preliminary Safety Analysis Report.

APPENDIX

The input data specifications; a listing of the Fortran statements in the INGRES program; sample input for the program; sample output; and the Fortran variable names, meanings, and dimensions (where applicable) are given in Tables A.1 to A.5 respectively. A flow diagram that presents the logic of the computation is included as Fig. A.1.

Table A.1. Input data cards

Card No. 1 — Format (6F10.0, I3)

PCI = containment pressure before blowdown, psia
PRI = PCRV pressure before blowdown, psia
P = equilibrium PCRV-containment pressure after blowdown, psia
VC = free volume of containment, ft^3
TC = temperature of containment, after blowdown, °R
HERI = mass of helium in PCRV before blowdown, lb_m
NP = number of time intervals (including the initial conditions at time = 0)

Card No. 2 — Format (6F10.0)

TI(1) = average core inlet temperature before blowdown
TO(1) = average core outlet temperature after blowdown
TIME(1) = initial time (usually zero)
AMAX = maximum area for leakage, $in.^2$
COEFF = flow coefficient for free convection loop
H = height of free convection columns, ft

Card Set 3 — Format (10F8.0)

TI(2)—TI(NP) = core inlet temperatures

Next Card Set Format (10F8.0)

TO(2)—TO(NP) = core outlet temperatures

Next Card Set Format (10F8.0)

TIME(2)—TIME(NP) = time interval, hr

Table A.2. Listing of Fortran program for INGRES

```
C  THIS PROGRAM CALCULATES THE RATE OF CONTAINMENT GAS INGRESS INTO THE INGR   1
C  PRESTRESSED CONCRETE REACTOR VESSEL (PCRV) OF A HIGH TEMPERATURE     INGR   2
C  GAS COOLED REACTOR (HTGR) FOLLOWING A DESIGN BASE DEPRESSURIZATION   INGR   3
C  ACCIDENT (DBDA).  THE MOLECULAR WEIGHT AND MOLE FRACTION OF HELIUM   INGR   4
C  IN THE PCRV ARE TABULATED AS A FUNCTION OF TIME.                     INGR   5
      IMPLICIT REAL (A-H,M-Z)                                           INGR   6
      INTEGER NP                                                        INGR   7
      DIMENSION TI(100),TO(100),TIME(100)                               INGR   8
  100 FORMAT(2H1  )                                                     INGR   9
  101 FORMAT(10F8.0)                                                    INGR  10
  102 FORMAT(6F10.0,I3)                                                 INGR  11
  103 FORMAT(6F10.0)                                                    INGR  12
  104 FORMAT(80H                                                        INGR  13
     1                              )                                  INGR  14
  105 FORMAT(1H ,F8.4,8X,F5.0,3X,F6.0,8X,F6.2, 8X,F7.4)                 INGR  15
  106 FORMAT(1H0,3X,'TIME',8X,'AVG. COOLANT TEMPS',4X,'MOLECULAR', 8X,'MINGR  16
     2OLE')                                                             INGR  17
  107 FORMAT(1H ,18X,'IN',6X,'OUT',10X,'WEIGHT', 8X,'FRAC HE')          INGR  18
  108 FORMAT(1H ,1X,'(HOURS)', 9X,'(F)',6X,'(F)',7X,'(LBM/LB-MOLE)')    INGR  19
  109 FORMAT(1H0,'CONTAINMENT PRESSURE BEFORE DBDA =',F5.1,' PSIA')     INGR  20
  110 FORMAT(1H ,'VOLUME OF CONTAINMENT =',F9.0,' CUBIC FEET')          INGR  21
  111 FORMAT(1H ,'TEMPERATURE OF CONTAINMENT =',F6.1,' DEG R')          INGR  22
  112 FORMAT(1H ,'MASS OF HELIUM IN PCRV BEFORE DBDA =',F7.0,' LBM')    INGR  23
  113 FORMAT(1H ,'PCRV PRESSURE BEFORE DBDA =',F6.1,' PSIA')            INGR  24
  114 FORMAT(1H ,'SYSTEM PRESSURE AFTER DBDA =',F5.1,' PSIA')           INGR  25
  115 FORMAT(1H ,'MOLECULAR WEIGHT OF CONTAINMENT'/5X,                  INGR  26
     1'IMMEDIATELY AFTER DBDA IS',F6.2,' LBM/LB-MOLE')                  INGR  27
  116 FORMAT (1H0,'MOLECULAR WEIGHT OF CONTAINMENT IS NOW',F6.2,' LBM/LBINGR  28
     2-MOLE')                                                           INGR  29
  117 FORMAT(1H ,'MAXIMUM CROSS SECTIONAL AREA FOR THE LEAK =',F7.1,' SQINGR  30
```

Table A.2 (continued)

```
   2. IN.')                                                          INGR  31
118 FORMAT(1H ,'THE LOSS COEFFICIENT FOR COMBINED INLET'/5X,         INGR  32
   1'AND OUTLET LOSSES FOR EACH COLUMN =',F4.1)                      INGR  33
119 FORMAT(1H ,'THE HEIGHT OF THE BUOYANT COLUMN =',F4.1,' FT')      INGR  34
120 FORMAT(63H0_______________________________________________________INGR  35
   1_______  )                                                       INGR  36
     TAVG(TA,TB) = (TA+TB)/2. + 460.                                 INGR  37
    FLOW(RHOC,RHOR) = (AFLOW/(12.*12.))*SQRT(2.*32.2*                INGR  38
   2 (RHOC-RHOR)*RHOR*RHOR*H/(COEFF*(RHOR+RHOC)))                    INGR  39
 50 READ(5,104,END=99)                                               INGR  40
    READ(5,102)PCI,PRI,P,VC,TC,HERI,NP                               INGR  41
    READ(5,103) TI(1),TO(1),TIME(1),AMAX,COEFF,H                     INGR  42
      READ(5,101) (TI(I),I=2,NP)                                     INGR  43
      READ(5,101) (TO(I),I=2,NP)                                     INGR  44
      READ(5,101) (TIME(I),I=2,NP)                                   INGR  45
    WRITE (6,100)                                                    INGR  46
    WRITE(6,104)                                                     INGR  47
    WRITE(6,120)                                                     INGR  48
    WRITE(6,109)PCI                                                  INGR  49
    WRITE (6,110)VC                                                  INGR  50
    WRITE (6,111)TC                                                  INGR  51
    WRITE (6,112)HERI                                                INGR  52
    WRITE(6,113)PRI                                                  INGR  53
    WRITE (6,114)P                                                   INGR  54
    WRITE (6,117)AMAX                                                INGR  55
    WRITE (6,118) COEFF                                              INGR  56
    WRITE(6,119)H                                                    INGR  57
      R= 10.73                                                       INGR  58
    AFLOW = AMAX/2.                                                  INGR  59
```

Table A.2 (continued)

```
N2RMF = 0.                                                          INGR  60
CORMF = 0.                                                          INGR  61
  HERMF=1.                                                          INGR  62
N2RM = 0.                                                           INGR  63
CORM = 0.                                                           INGR  64
COCM = 0.                                                           INGR  65
COCMF = 0.                                                          INGR  66
  MWR=4.                                                            INGR  67
  TM = TAVG(TI(1),TO(1))                                            INGR  68
AIRCM = PCI*VC/(R*TC)                                               INGR  69
HERMI = HERI/4.                                                     INGR  70
VR = HERMI*R*TM/PRI                                                 INGR  71
HERM = P*VR/(R*TM)                                                  INGR  72
HECM = HERMI - HERM                                                 INGR  73
  TOTCM=AIRCM+HECM                                                  INGR  74
  AIRCMF=AIRCM/TOTCM                                                INGR  75
N2CMF = .8*AIRCMF                                                   INGR  76
O2CMF = .2*AIRCMF                                                   INGR  77
O2CM = .2*AIRCM                                                     INGR  78
N2CM = .8*AIRCM                                                     INGR  79
  HECMF=HECM/TOTCM                                                  INGR  80
  MWC=AIRCMF*28.8 + HECMF*4.                                        INGR  81
WRITE(6,115)MWC                                                     INGR  82
 WRITE (6,106)                                                      INGR  83
 WRITE (6,107)                                                      INGR  84
 WRITE (6,108)                                                      INGR  85
WRITE (6,105)TIME(1),TI(1),TO(1),MWR,HERMF                          INGR  86
  I=0                                                               INGR  87
  J=1                                                               INGR  88
```

Table A.2 (continued)

```
C  FREE CONVECTION LOOP                                                INGR  89
    2 RHOC=P*MWC/(R*TC)                                                 INGR  90
        RHOR = P*MWR/(R*TM)                                             INGR  91
        GO = (TIME(J+1) - TIME(J))*3600.*FLOW(RHOC,RHOR)                INGR  92
        GOM=GO/MWR                                                      INGR  93
        HEOM1=HERMF*GOM                                                 INGR  94
      COOM1 = CORMF*GOM                                                 INGR  95
      N2OM1 = N2RMF*GOM                                                 INGR  96
        VI=GO/RHOR                                                      INGR  97
C  CONTAINMENT MIXTURE ENTERS AND EXPANDS                               INGR  98
    1 MIXIM = P*VI/(R*TC)                                               INGR  99
        HEIM=HECMF*MIXIM                                                INGR 100
      COIM = COCMF*MIXIM                                                INGR 101
      N2IM = N2CMF*MIXIM                                                INGR 102
      O2IM = O2CMF*MIXIM                                                INGR 103
      COIMR = COIM + 2.*O2IM                                            INGR 104
      MIXIMR = COIM + N2IM + HEIM                                       INGR 105
      VEXP = MIXIMR*R*TM/P                                              INGR 106
C  PCRV GAS FORCED OUT                                                  INGR 107
        GVO=VEXP - VI                                                   INGR 108
    5 GMO=P*GVO/(R*TM)                                                  INGR 109
        HEOM2=HERMF*GMO                                                 INGR 110
      COOM2 = CORMF*GMO                                                 INGR 111
      N2OM2 = N2RMF*GMO                                                 INGR 112
C  CURRENT PCRV INVENTORY                                               INGR 113
        HERM=HERM - HEOM1 + HEIM - HEOM2                                INGR 114
      CORM = CORM - COOM1 + COIMR - COOM2                               INGR 115
      N2RM = N2RM - N2OM1 + N2IM - N2OM2                                INGR 116
      TOTRM = HERM + CORM + N2RM                                        INGR 117
```

Table A.2 (continued)

```
        HERMF=HERM/TOTRM                                                INGR 118
      CORMF = CORM /TOTRM                                               INGR 119
      N2RMF = N2RM/TOTRM                                                INGR 120
      MWR = HERMF*4. + CORMF*28. + N2RMF*28.                            INGR 121
C CURRENT CONTAINMENT INVENTORY                                         INGR 122
        HECM = HECM + HEOM1 - HEIM + HECM2                              INGR 123
      O2CM = O2CM -O2IM                                                 INGR 124
      COCM = COCM + COOM1 - COIM +COOM2                                 INGR 125
      N2CM = N2CM + N2OM1 - N2IM + N2OM2                                INGR 126
      TOTCM = COCM + N2CM +HECM + O2CM                                  INGR 127
      COCMF = COCM/TOTCM                                                INGR 128
      N2CMF = N2CM/TOTCM                                                INGR 129
      O2CMF = O2CM/TOTCM                                                INGR 130
        HECMF= HECM/TOTCM                                               INGR 131
       MWC = HECMF*4. + COCMF*28. + N2CMF*28. + O2CMF*32.               INGR 132
        IF (I-1) 7,6,6                                                  INGR 133
    6 I=0                                                               INGR 134
      WRITE (6,105)TIME(J),TI(J),TO(J),MWR,HERMF                        INGR 135
        IF(J.EQ.NP) GO TO 10                                            INGR 136
        GO TO 2                                                         INGR 137
    7 J=J+1                                                             INGR 138
C  TEMPERATURE CHANGE RESULTS IN EXPANSION OR CONTRACTION               INGR 139
        TM = TAVG(TI(J),TO(J))                                          INGR 140
        VNEW=TOTRM*R*TM/P                                               INGR 141
        VI=VR - VNEW                                                    INGR 142
        I=1                                                             INGR 143
        IF (VI) 4,4,3                                                   INGR 144
    3 HEOM1 = 0.                                                        INGR 145
      COOM1 = 0.                                                        INGR 146
```

Table A.2 (continued)

```
      N2OM1 = 0.                                                INGR 147
        GO TO 1                                                 INGR 148
    4 GVO = -VI                                                 INGR 149
      N2IM = 0.                                                 INGR 150
      O2IM = 0.                                                 INGR 151
      COIM = 0.                                                 INGR 152
      COOM1 = 0.                                                INGR 153
      N2OM1 =0.                                                 INGR 154
        HEIM = 0.                                               INGR 155
        HEOM1 = 0.                                              INGR 156
      COIMR = 0.                                                INGR 157
        GO TO 5                                                 INGR 158
   10 WRITE (6,116)MWC                                          INGR 159
      WRITE(6,120)                                              INGR 160
      GO TO 50                                                  INGR 161
   99 WRITE(6,121)                                              INGR 162
  121 FORMAT(2H1 )                                              INGR 163
      STOP                                                      INGR 164
        END                                                     INGR 165
```

Table A.3. Sample input for the INGRES program

```
     Table 1.  Composition in PCRV of Summit Station HTGR
14.7       725.       23.2       2280000.  565.       14700.      29
607.       1416.      0.         100.      1.2        8.
367.0   368.0   369.0   372.0   375.0   374.0   373.0   373.0   374.0   376.0
387.0   380.0   382.0   384.0   386.0   387.0   388.0   388.0   389.0   389.0
388.0   387.0   384.0   380.0   376.0   371.0   367.0   364.0
1520.0  1524.C  1527.0  1558.C  1585.0  1609.0  1631.0  1653.0  1688.0  1719.0
1744.0  1761.0  1776.0  1787.0  1793.0  1794.0  1793.0  1789.0  1782.0  1771.0
1748.0  1716.0  1680.0  1641.0  1596.0  1560.0  1519.0  1500.
0.0833  0.0892  0.1004  0.2012  0.3008  0.4004  0.5000  0.6064  0.8064  1.0064
1.2084  1.3954  1.5994  1.8034  2.0164  2.1964  2.3964  2.5964  2.7964  3.0364
3.3964  3.7964  4.1964  4.5964  5.0364  5.3964  5.7964  5.9964
     Table 2.  Composition in PCRV of Fulton Station HTGR
15.7       725.       23.2       2270000.  560.       20745.      29
607.       1416.      0.         100.      1.2        8.
367.0   368.0   369.0   372.0   375.0   374.0   373.0   373.0   374.0   376.0
387.0   380.0   382.0   384.0   386.0   387.0   388.0   388.0   389.0   389.0
388.0   387.0   384.0   380.0   376.0   371.0   367.0   364.0
1520.0  1524.C  1527.0  1558.0  1585.0  1609.0  1631.0  1653.0  1688.0  1719.0
1744.0  1761.0  1776.0  1787.0  1793.0  1794.0  1793.0  1789.0  1782.0  1771.0
1748.0  1716.0  1680.0  1641.0  1596.0  1560.0  1519.0  1500.
0.0833  0.0892  0.1004  0.2012  0.3008  0.4004  0.5000  0.6064  0.8064  1.0064
1.2084  1.3954  1.5994  1.8034  2.0164  2.1964  2.3964  2.5964  2.7964  3.0364
3.3964  3.7964  4.1964  4.5964  5.0364  5.3964  5.7964  5.9964
 Table 3.  Comparision of values from INGRES with those of GAC
14.7       700.       23.2       1687000.  610.       17420.      29
607.       1416.      0.         100.      1.2        18.5
367.0   368.0   369.0   372.0   375.0   374.0   373.0   373.0   374.0   376.0
387.0   380.0   382.0   384.0   386.0   387.0   388.0   388.0   389.0   389.0
```

Table A.3 (continued)

388.0	387.0	384.0	380.0	376.0	371.0	367.0	364.0		
1520.0	1524.0	1527.0	1558.0	1585.0	1609.0	1631.0	1653.0	1688.0	1719.0
1744.0	1761.0	1776.0	1787.0	1793.0	1794.0	1793.0	1789.0	1782.0	1771.0
1748.0	1716.0	1680.0	1641.0	1596.0	1560.0	1519.0	1500.		
0.0833	0.0892	0.1004	0.2012	0.3008	0.4004	0.5000	0.6064	0.8064	1.0064
1.2084	1.3954	1.5994	1.8034	2.0164	2.1964	2.3964	2.5964	2.7964	3.0364
3.3964	3.7964	4.1964	4.5964	5.0364	5.3964	5.7964	5.9964		

Table A.4. Sample of output from the INGRES program

15.7	725.	9.5	2270000.	560.	20745.	29			
607.	1416.	0.	100.	1.2	.3				
367.0	368.0	369.0	372.0	375.0	374.0	373.0	373.0	374.0	376.0
387.0	380.0	382.0	384.0	386.0	387.0	388.0	388.0	389.0	389.0
388.0	387.0	384.0	380.0	376.0	371.0	367.0	364.0		
1520.0	1524.0	1527.0	1558.0	1585.0	1609.0	1631.0	1653.0	1688.0	1719.0
1744.0	1761.0	1776.0	1787.0	1793.0	1794.0	1793.0	1789.0	1782.0	1771.0
1748.0	1716.0	1680.0	1641.0	1596.0	1560.0	1519.0	1500.		
0.0833	0.0892	0.1004	0.2012	0.3008	0.4004	0.5000	0.6064	0.8064	1.0064
1.2084	1.3954	1.5994	1.8034	2.0164	2.1964	2.3964	2.5964	2.7964	3.0364
3.3964	3.7964	4.1964	4.5964	5.0364	5.3964	5.7964	5.9964		

Table A.4. Sample of output from the INGBES program

CONTAINMENT PRESSURE BEFORE DBDA = 15.7 PSIA
VOLUME OF CONTAINMENT = 2270000. CUBIC FEET
TEMPERATURE OF CONTAINMENT = 560.0 DEG R
MASS OF HELIUM IN PCRV BEFORE DBDA = 20745. LBM
PCRV PRESSURE BEFORE DBDA = 725.0 PSIA
SYSTEM PRESSURE AFTER DBDA = 9.5 PSIA
MAXIMUM CROSS SECTIONAL AREA FOR THE LEAK = 100.0 SQ. IN.
THE LOSS COEFFICIENT FOR COMBINED INLET
AND OUTLET LOSSES FOR EACH COLUMN = 1.2
THE HEIGHT OF THE BUOYANT COLUMN = 0.3 FT
MOLECULAR WEIGHT OF CONTAINMENT
IMMEDIATELY AFTER DBDA IS 17.31 LBM/LB-MOLE

TIME	AVG. COOLANT TEMPS IN	OUT	MOLECULAR WEIGHT	MOLE FRAC HE
(HOURS)	(F)	(F)	(LBM/LB-MOLE)	
0.0	607.	1416.	4.00	1.0000
0.0833	367.	1520.	5.80	0.9250
0.0892	368.	1524.	5.81	0.9247
0.1004	369.	1527.	5.82	0.9241
0.2012	372.	1558.	5.95	0.9186
0.3008	375.	1585.	6.08	0.9131
0.4004	374.	1609.	6.21	0.9077
0.5000	373.	1631.	6.34	0.9023
0.6064	373.	1653.	6.48	0.8966
0.8064	374.	1688.	6.74	0.8860
1.0064	376.	1719.	6.99	0.8754
1.2084	387.	1744.	7.24	0.8650
1.3954	380.	1761.	7.47	0.8555
1.5994	382.	1776.	7.71	0.8453
1.8034	384.	1787.	7.95	0.8354
2.0164	386.	1793.	8.19	0.8253
2.1964	387.	1794.	8.39	0.8170
2.3964	388.	1793.	8.61	0.8079
2.5964	388.	1789.	8.82	0.7992
2.7964	389.	1782.	9.02	0.7906
3.0364	389.	1771.	9.26	0.7807
3.3964	388.	1748.	9.61	0.7663
3.7964	387.	1716.	10.03	0.7489
4.1964	384.	1680.	10.44	0.7318
4.5964	380.	1641.	10.84	0.7150
5.0364	376.	1596.	11.26	0.6975
5.3964	371.	1560.	11.57	0.6845
5.7964	367.	1519.	11.92	0.6701
5.9964	364.	1500.	12.04	0.6648

MOLECULAR WEIGHT OF CONTAINMENT IS NOW 17.27 LBM/LB-MOLE

Table A.5. List of Fortran variables used in the INGRES program

AIRCM = air in containment, lb-moles

AIRCMF = mole fraction of air in containment

AMAX = maximum flow area for leakage, $in.^2$

AFLOW = inflow or outflow leakage area, $in.^2$

COCM = CO in containment, lb-moles

COIM = CO entering PCRV, lb-moles

CORM = CO in PCRV, lb-moles

COCMF = mole fraction of CO in the containment

COEFF = flow coefficient

COIMR = CO that enters + CO formed by reaction, lb-moles

COOM1 = CO forced out by entering containment gas during free convection loop, lb-moles

COOM2 = CO forced out by expanding containment gas, lb-moles

CORMF = mole fraction of CO in the PCRV

FLOW = statement function for free convection flow rate, lb_m/sec

GMO = PCRV gas leaving, lb-moles

GVO = PCRV gas leaving, ft^3

GOM = PCRV gas leaving during free convection, lb-moles

GO = PCRV gas leaving by convection loop, lb_m

HERMF = mole fraction of helium in PCRV

HERM = helium in the PCRV, lb-moles

HEOM1 = helium leaving PCRV by convection loop, lb-moles

HECM = helium in containment, lb-moles

HECMF = mole fraction of helium in containment

HEIM = helium entering PCRV in convection loop, lb-moles

HEOM2 = helium forced out by expanding containment gas that entered, lb-moles

H = height of free convection columns, ft

HERI = helium in the PCRV before blowdown, lb_m

HERMI = helium in the PCRV before blowdown, lb-moles

I = 0 or 1 indicates whether free convection or expansion-contraction should be calculated

J = time counter $1 \leq J \leq NP$

MAXIM = containment mixture entering PCRV in convection loop, lb-moles

Table A.5 (continued)

MWR = molecular weight of PCRV gas

MWC = molecular weight of containment gas

MIXIMR = amount of mixture in the PCRV after CO reaction, lb-moles

N2CM = N_2 in containment, lb-moles

N2IM = N_2 entering PCRV, lb-moles

N2RM = N_2 in PCRV, lb-moles

N2CMF = mole fraction N_2 in containment

N2OM1 = amount of N_2 forced out by entering containment gas during free convection loop, lb-moles

N2OM2 = amount of N_2 forced our of PCRV by expanding containment gas, lb-moles

N2RMF = mole fraction N_2 in PCRV

O2CM = O_2 in containment, lb-moles

O2IM = O_2 entering PCRV, lb-moles

O2CMF = mole fraction O_2 in containment

P = equilibrium pressure in containment and PCRV after blowdown, psia

PCI = initial containment pressure before blowdown, psia

PRI = initial PCRV pressure before blowdown, psia

RHOC = density of gas mixture in containment

RHOR = density of gas mixture in PCRV

TIME = time stations, hr

TAVG = average of TO and TI

TO = average outlet temperature from core, °R

TI = average inlet temperature to core, °R

TOTCM = total lb-moles in containment

TOTRM = total lb-moles in PCRV

TM = average temperature of PCRV gas, °R

TC = average temperature of containment gas, °R

VI = volume to be filled by entering gas, ft^3

VR = volume of PCRV, ft^3

VC = total volume of containment, ft^3

VEXP = expanded volume of containment gas that entered in convection loop

VNEW = PCRV gas after a cooldown period, ft^3

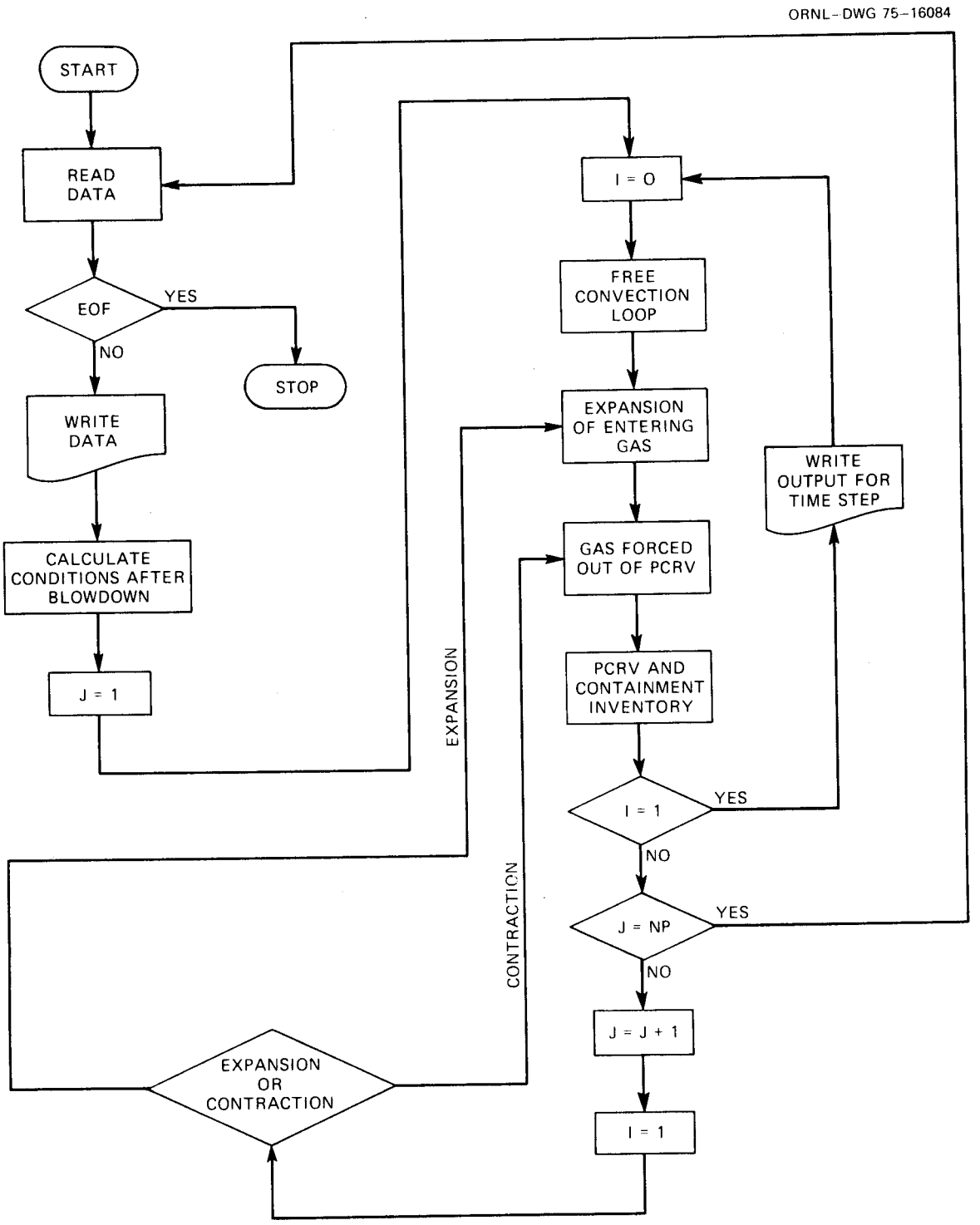

Fig. A.1. Flow diagram for the INGRES program.

Internal Distribution

1. J. L. Anderson
2. S. J. Ball
3. J. P. Callahan
4. D. A. Canonico
5. J. C. Cleveland
6. T. E. Cole
7. J. H. Coobs
8. D. Constanzo
9. W. B. Cottrell
10. F. L. Culler
11. R. M. DeVault
12. G. G. Fee
13. M. H. Fontana
14. Uri Gat
15. G. E. Giles, Jr.
16. M. J. Goglia
17. H. W. Hoffman
18. F. J. Homan
19. J. D. Jenkins
20-22. P. R. Kasten
23. A. L. Lotts
24. R. E. MacPherson/ J. A. Conlin
25. A. P. Malinauskas
26. Walter J. McCarthy
27. D. D. Paul
28. H. Postma
29. P. L. Rittenhouse
30. M. W. Rosenthal
31-45. J. P. Sanders
46. Dunlap Scott
47. Myrtleen Sheldon
48. I. Spiewak
49. J. R. Tallackson
50. John J. Taylor
51. D. B. Trauger
52. W. D. Turner
53. G. D. Whitman
54. W. J. Wilcox
55. ORNL Patent Office
56-57. Central Research Library
58. Document Reference Section
59-63. Laboratory Records Department
64. Laboratory Records Department (RC)

External Distribution

65. Director, Division of Reactor Licensing, USNRC, Washington, D.C. 20555
66. Director, Division of Technical Review, USNRC, Washington, D.C. 20555
67. Assistant Director for Reactor Safety, Division of Technical Review, USNRC, Washington, D.C. 20555
68-87. Chief, Gas Cooled Reactors Branch, Division of Reactor Licensing, USNRC, Washington, D.C. 20555
88. Chief, Reactor Systems Branch, Division of Technical Review, USNRC, Washington, D.C. 20555
89. Chief, Core Performance Branch, Division of Technical Review, USNRC, Washington, D.C. 20555
90-91. Director, Office of Nuclear Regulatory Research, USNRC, Washington, D.C. 20555
92. Assistant Director, Advanced Reactor Safety Research, Division of Reactor Safety Research, USNRC, Washington, D.C. 20555
93. Chief, Experimental Gas Cooled Reactor Safety Research Branch, Division of Reactor Safety Research, USNRC, Washington, D.C. 20555
94. Director, Division of Reactor Research and Development, ERDA, Washington, D.C. 20545

95-97. Office of Reactor Safety Research Coordination, ERDA, Washington, D.C. 20545
98. Assistant Director, Gas Cooled Reactor Projects, Division of Reactor Research and Development, ERDA, Washington, D.C. 20545
99. Assistant Director, Reactor Safety, Division of Reactor Research and Development, ERDA, Washington, D.C. 20545
100. Chief, Gas Reactor Safety Branch, Division of Reactor Research and Development, ERDA, Washington, D.C. 20545
101. Director, Research and Technical Support Division, ERDA, ORO
102. Director, Reactor Division, ERDA, ORO
103-129. Technical Information Center, ERDA, ORO
130. W. H. Beach, EGCRSRB, Division of Reactor Safety Research, USNRC, Washington, D.C. 20555
131. A. Bournia, Gas Cooled Reactors Branch, Division of Reactor Licensing, USNRC, Washington, D.C. 20555
132. R. E. Ireland, Division of Technical Review, USNRC, Washington, D.C. 20555
133. E. Lantz, Gas Cooled Reactors Branch, Division of Reactor Licensing, USNRC, Washington, D.C. 20555
134. R. Lobel, Division of Technical Review, USNRC, Washington, D.C. 20555