OAK RIDGE NATIONAL LABORATORY LIBRARIES
3 4456 0550283 6

CENTRAL RESEARCH LIBRARY ORNL-TM-4351

cy. 128

FABRICATION AND MECHANICAL TEST DATA FOR ACCEPTANCE OF THE FIRST SIX 6-INCH-THICK INTERMEDIATE TEST VESSELS OF THE HEAVY SECTION STEEL TECHNOLOGY PROGRAM

C. E. Childress

OAK RIDGE NATIONAL LABORATORY
CENTRAL RESEARCH LIBRARY
DOCUMENT COLLECTION
LIBRARY LOAN COPY
DO NOT TRANSFER TO ANOTHER PERSON
If you wish someone else to see this document, send in name with document and the library will arrange a loan.
UCN-7969
(3 3-67)

OAK RIDGE NATIONAL LABORATORY
OPERATED BY UNION CARBIDE CORPORATION • FOR THE U.S. ATOMIC ENERGY COMMISSION

Printed in the United States of America. Available from
National Technical Information Service
U.S. Department of Commerce
5285 Port Royal Road, Springfield, Virginia 22151
Price: Printed Copy $5.45; Microfiche $0.95

This report was prepared as an account of work sponsored by the United States Government. Neither the United States nor the United States Atomic Energy Commission, nor any of their employees, nor any of their contractors, subcontractors, or their employees, makes any warranty, express or implied, or assumes any legal liability or responsibility for the accuracy, completeness or usefulness of any information, apparatus, product or process disclosed, or represents that its use would not infringe privately owned rights.

ORNL - TM - 4351
UC-80 - Reactor Technology

Contract No.W-7405-eng-26

DIRECTOR'S DIVISION

FABRICATION AND MECHANICAL TEST DATA FOR ACCEPTANCE OF THE FIRST SIX 6-INCH-THICK INTERMEDIATE TEST VESSELS OF THE HEAVY SECTION STEEL TECHNOLOGY PROGRAM

C. E. Childress

OCTOBER 1973

NOTICE This document contains information of a preliminary nature and was prepared primarily for internal use at the Oak Ridge National Laboratory. It is subject to revision or correction and therefore does not represent a final report.

OAK RIDGE NATIONAL LABORATORY
Oak Ridge, Tennessee 37830
operated by
UNION CARBIDE CORPORATION
for the
U.S. ATOMIC ENERGY COMMISSION

OAK RIDGE NATIONAL LABORATORY LIBRARIES

3 4456 0550283 6

CONTENTS

	Page No.
Foreward	1
Abstract	2
Introduction	2
1. Procurement of the Intermediate Test Vessels	4
2. Components	5
3. Fabrication of the Intermediate Test Vessels	26
3.1 Vessel V-1	31
3.2 Vessel V-2	35
3.3 Vessel V-3	40
3.4 Vessel V-4	41
3.5 Vessel V-5	42
3.6 Vessel V-6	46
References	51

FOREWORD

The work described in this report has been carried out under the Heavy Section Steel Technology (HSST) Program. The HSST Program is a USAEC sponsored effort for investigating the effects of flaws, variations of properties and stress raisers on the strength and structural reliability of present and contemplated water-cooled reactor vessels. The cognizant engineer for the USAEC is J. R. Hunter. At ORNL the program is under the Pressure Vessel Technology Program. This report is designated Heavy Section Steel Technology Program Documentary Report No. 4. Prior issues in this series are:

1. Fabrication History of the First Two 12-in.-Thick A-533 Grade B, Class 1 Steel Plates of the Heavy Section Steel Technology Program, Documentary Report 1, USAEC Report ORNL-4313, Oak Ridge National Laboratory, February 1969.

2. Fabrication History of the Third and Fourth ASTM A-533 Steel Plates of the Heavy Section Steel Technology Program, USAEC Report ORNL-4313-2, Oak Ridge National Laboratory, February 1970.

3. Fabrication Procedures and Acceptance Data for ASTM A-533 Welds and a 10-in.-Thick ASTM A-543 Plate of the Heavy Section Steel Technology Program, Documentary Report 3, USAEC Report ORNL-4313-3, January 1971.

Fabrication and Mechanical Test Data for Acceptance of the First Six 6-Inch-Thick Intermediate Test Vessels of the Heavy Section Steel Technology Program

ABSTRACT

The HSST program has among its goals the objective to demonstrate the capability to predict safe behavior of thick-walled pressure vessels, containing flaws of known dimensions under frangible, transitional, and tough loading regimes. Accordingly, the program is conducting a series of tests involving 6-in.-thick pressure vessels, which will serve as test specimens for assisting in the characterization of failure under these loading conditions. Among the vessels a number of parameters, such as weld type, weld location, flaw size and shape, and test temperature and pressure will be selectively varied to show that a rationale exists for dealing with the varied stress and metallurgical states which normally exist in commercial nuclear reactor vessels. Each vessel will serve as a go, no-go determination of critical flaw size for a specific set of test parameters.

This report covers the manufacturing details of the individual components and their ultimate assembly into a finished vessel. Details concerning chemical composition, mechanical and nondestructive test data are presented.

Eventually ten vessels will be built and tested to failure; however, this report will cover only the first six.

INTRODUCTION

The Heavy Section Steel Technology (HSST) program is a USAEC-sponsored effort for investigating the effects of flaws, variations of properties, stress raisers, and residual stress on the structural reliability of present and contemplated water-cooled reactor pressure vessels. The program covers both material property investigations and fracture behavior based on

transition temperature and fracture mechanics methods (including their extension to a quantitative delineation of toughness behavior).

The program negotiated a contract with the Gulf and Western Taylor Forge Division of Paola, Kansas for fabrication of the 6-in.-thick Intermediate Test Vessels. Although ten vessels will be included in the Intermediate Vessel Test studies, only the data relative to the first six are discussed in this report.

Each of the vessels was fabricated from forged components; one was provided with a 9-in. ID nozzle. Fabrication of the vessel components was sublet to two forging manufacturers; National Forge Co., of Erie and Irvine, Pa. and Lenape Forge Co., of Lenape, Pa. National Forge made the closure flanges (transition sections), the shell courses and a weld test plate which was used by Taylor Forge for qualifying the appropriate procedures. Lenape Forge made the hemispherical and flat heads, and the 9-in. ID nozzle. All of the components were made from ASTM A-508 Class 2 materials.

Heat treatment of the components consisted in normalize, austenitize, quench, and temper. On completion of machining, each of the components was subjected to ultrasonic and magnetic particle inspection. The completed welds in the vessels were inspected ultrasonically and with magnetic particles. The heat treatment data and nondestructive test results are provided.

The purpose of this report is to provide researchers and analysts an historical record of the procedures used in fabricating the Intermediate Test Vessels from the time the components were melted, forged, and heat treated until they were assembled into completed test vessels.

The author wishes to thank the following for making essential test data available for this report: (1) National Forge Co., particularly V. F. Oberhofer and E. G. Nisbett; (2) F. P. Fetterolf of Lenape Forge Co.; and John Webb and R. C. Sommerfeld of Taylor Forge Co.

1. PROCUREMENT OF THE INTERMEDIATE TEST VESSELS

A contract was negotiated with the Gulf and Western Taylor Forge Division of Paola, Kansas for fabrication of six 6-in.-thick test vessels for the HSST program. Each was fabricated from forged components essentially as shown in Fig. 1 except that one vessel was provided with a 9-in.-ID nozzle, and among the vessels, certain parameters such as weld type and weld location were selectively varied. During the proof tests, each vessel is provided with artificially induced flaws of varying size, configuration, and location. Each vessel will serve as a test specimen for demonstrating the capability to predict safe behavior of thick-walled pressure vessels containing flaws of known dimensions under frangible, transitional, and tough loading regimes. Each particular vessel will serve to provide a determination of critical flaw size for a specific set of test parameters.

The vessels were purchased and fabricated in accordance with ORNL Specification No. JS-120-228 Revision 2, (9-9-69). Cost considerations prohibited the purchase and testing of full-size nuclear reactor vessels. Therefore, it was decided to build and test a series of "intermediate-sized" vessels. Intermediate in this sense is defined as a size intermediate between a full-size vessel and a conventional laboratory specimen.

The philosophy of the purchase specification was to assure that the design and fabrication of the Intermediate Test Vessels would adhere as closely as possible to the requirements of the

current edition (1968) of the ASME Code for Nuclear Vessels, Section III. In one particular area, the nondestructive testing requirements were somewhat more stringent than those of the Code in that ultrasonic inspection of longitudinal and circumferential welds was required. The specification required that such inspection be performed in accordance with the procedure defined in Par. N-625 and Appendix IX of Section III.

Note: Section III requires that nozzle welds only be subjected to ultrasonic examination. Since the number of vessels scheduled for testing is minimal for the program objectives, it was decided to require ultrasonic inspection of all welds (using Section III inspection procedures) to preclude the likelihood of an unintended failure.

Teledyne Materials Research (TMR) performed a stress analysis and design evaluation of the vessels, which were designed by Taylor Forge. The work included structural analysis of the closure assembly for the specified maximum temperature and internal pressure conditions of 400°F and 20,000 psi, respectively. The closure (head and access nozzle assembly) was analyzed by using TMR's orthotropic finite-element composite closure technique.[1]

2. COMPONENTS

Fabrication of the vessel components was sublet to two forging manufacturers; National Forge Co., of Erie, and Irvine, Pa., and Lenape Forge Co., of Lenape, Pa. National Forge made the closure flanges (transition sections), the shell courses, and a weld test plate, used by Taylor Forge for qualifying the appropriate procedures. Lenape Forge made the hemispherical and flat heads and the 9-in.-ID nozzle. All of the components were made from ASTM A-508 Cl 2 materials.

Lenape does not have melting facilities; they buy all of their materials in ingot, billet, etc., form. Therefore, little information is available regarding materials prior to the time they were received by Lenape.

Materials for the hemi heads were obtained from a billet with a 32-in.-square cross section, made from a single melt, heat Q2Q18W. The analysis for that heat is:

C	Mn	P	S	Si	Cr	Ni	Mo	V
0.19	0.78	0.008	0.022	0.23	0.39	0.82	0.63	0.03

The billet was cut into six sections which measured 32 x 14 x 45 in. long; each weighed about 5400 lb. Each piece was then placed in a furnace and heated to about 1950°F. The first operation consisted of forging the material into a cylindrical configuration (24 in. diam x 48 in. long) by working the opposite corners. The temperature of the parts on completion of preliminary forming was about 1750°F. (Lenape advised that their minimum forging temperature was 1650°F).

The cylindrical parts were then reheated to about 2050°F, removed from the furnace, and placed upright in a specially prepared, preheated and lubricated die, as shown in the top view of Fig. 2. The cylindrically shaped piece was then pressed into the die, but the mass was slightly less than enough to completely fill the die; that is, the steel did not fill the die to the sidewalls. The next forging operation would force the steel to the sidewalls and facilitate machining of the ID surface. Following this operation (each required about 5 min), the pieces were again returned to the furnace for reheating to about 2050°F. The pieces were again removed from the furnace, reinserted in the die, and a blunt-ended tapered die was placed over the center of the mold and pressed about 6 in. into the steel. A second die having a radius of 12 in. was then placed over the

tapered hole (see bottom view of Fig. 2) and pressed deeper into the mass of steel. This operation forced the hot steel to the sidewalls of the die.

Lenape advised that they had hoped that the upset ratio would be about 1.75:1 to the top of the die, and then the center would be worked so that the upset ratio in the center would be 4:1.

Figure 3 shows one of the early forging operations in process. One of the heads is shown immediately after quenching, in Fig. 4 (note the thermocouple and the buffer plate attached to the bottom). A partially machined head is shown in Fig. 5.

On completion of the forging operations the hemi heads were treated by (1) normalizing at 1650°F, (2) austenitizing at 1560 ± 25°F and water quenching, and (3) tempering at 1225°F min and cooling in air. All parts were held at temperature for a minimum of 1 hr/in. of thickness.

Test specimens, removed from the lower portion of the hemi head forging (see Fig. 6), received simulated heat treatments in Lenape's Material Heat Cycle Simulator (Data Trac). To be assured that representative heating and cooling cycles were being applied to the specimens, one of the heads was instrumented with a thermocouple during the austenitizing and quenching cycles. The cooling rate thus obtained would be applied to the test specimens. The cooling rate obtained during the first quenching operation was somewhat faster than anticipated (based on the cooling rate for a flat head of similar mass that was quenched previously and on cooling rates previously obtained for 6-in.-thick HSST plates); therefore, a second head was equipped with two thermocouples to recheck the rate. The cooling rates obtained for the hemi heads are shown in Fig. 7. Data Trac cooling rate for test specimens was based on the slower cooling

rate of Curve B. (All test specimens received a simulated PWHT at 1150 ± 25°F for 30 hr.)

It should be noted that the test results derived from specimens taken from the locations shown in Fig. 6 were not acceptable. It was concluded by Lenape that this area probably had not received a sufficient amount of working to produce the desired results. Additional material was then removed from near the inside radius of the heads and the mechanical test results from these areas were acceptable.

Figure 8 shows the instrumentation that was provided during tempering of the hemi heads to determine the temperature variation throughout the parts. Four stainless steel sheathed Chromel-Alumel thermocouples were attached to each head, and as shown, three were tempered simultaneously. The spread in thermocouple readings during tempering of hemispherical heads 1, 5, and 6 is shown in Fig. 9. It may be seen that the tempering temperature in this case ranged from 1290 - 1320°F.

Each of the flat heads was forged from the same heat of material used to make the hemi heads. Sections of billet measuring 26 in. x 26 in. x 13-1/2 in. were cubed, then rounded on an open-die press, and upset into a 33 in. OD x 10-1/2 in.-deep die. The upset ratio was 2:1. Figure 10 is a rough finished head showing the location of the imbedded thermocouple (for determination of cooling rate) and the test material. The cooling rate determined for the flat heads is shown as Curve C in Fig. 7. Suffice to say, the flat heads received essentially the same heat treatment as the hemi heads.

The flat heads were also instrumented during tempering to determine the temperature variation through the parts and throughout the furnace. Figure 11 shows the arrangement of the surface-attached, Chromel-Alumel thermocouples used in

monitoring the tempering of the flat heads. The maximum temperature recorded during this cycle was about 1300°F. (See Fig. 12).

Results of the mechanical testing performed by Lenape on specimens from the flat and hemispherical heads are:

HEMISPHERICAL HEADS

Lenape ID No.	Ultimate Tensile Strength (ksi)	Yield Strength (ksi)	Reduction in Area(%)	Elong(%) in 2 in. Gage Length	C_v Values @ +10°F (ft-lb)
1	87	70	64.9	23.5	37-43-34
	87.7	70.6	59.8	22	42-43-39
2	87.3	70.6	67.0	24	39-31-31
	87.5	70.7	64.2	24.5	87-52-71
3	99.3	79.8	68	23	60-60-51
	96	78.7	68	23	47-51-52
4	95	78.7	67	23	74-49-71
	96	79.7	64	22.5	47-44-49
5	95.5	78	62	22.5	41-46-34
	95.6	78.7	62	22.5	28-31-36
6	96.5	80.5	67	22.5	28-31-31
	95	78	65	22.5	32-25-33

FLAT HEADS

1	90.5	70.9	66	23.5	82-78-65
	90	72	67	23.5	81-85-47
2	89	69.3	47.4	21.5	42-44-40
	92.5	74	62.5	23.5	36-31-37
3	91	71	56	24	38-41-39
	90-5	70.6	64	23.5	51-54-50
4	90	69	63	23.5	45-43-51
	90	70.3	65	23.5	39-35-52
5	90.1	73.3	62	22.5	35-22-38
	87.5	74.8	64.4	21.5	39-37-37
6	91.8	72.8	41.8	19	50-48-52
	89.2	70.4	49.3	20.5	53-54-47

None of the work involving the 9-in. ID nozzle (shown in Fig. 13) for vessel V-5 was audited. Certifications from Lenape show the following chemical analyses:

Forging No.	Heat No.	C	Mn	P	S	Si	Cr	Ni	Mo	V	Grain Size
R837G	Q2Q23W	.19	.73	.008	.014	.21	.26	.78	.69	.04	Ladle 10
		.207	.72	.005	.017	.23	.26	.86	.65	.05	Check 10

Reportedly the nozzle was forged, bored slightly undersized and heat treated. Heat treatment consisted in normalizing, austenitizing, quenching and tempering. Specifically the forging was heat treated as follows:

Normalized at 1650 ± 25°F for 7 hr and air cooled.
Austenitized at 1560 ± 25°F for 7 hr and water quenched.
Tempered at 1290 ± 25°F for 7 hr and air cooled.

The test material was stress relieved by heating from 600°F at a rate of about 70°F/hr max to 1125 ± 25°F, and holding for 30 hr. The material was control-cooled to 600°F at about 85°F/hr, and then to ambient temperature by cooling in air. The results of the mechanical tests are:

Tensile Strength psi	Yield Strength psi	Elong. % in. Gage length 2"	R.A. %
90,875	70,750	24.0	56.9
84,270	64,792	23.5	60.6

C_v at +10°F (ft-lb)	Lateral Exp. (in)	% Shear
52-44-41	.045-.039-.036	50-50-40
47-41-29	.040-.039-.029	50-40-30

This item was provided with a short prolongation which

subsequently received the same heat treatment as vessel V-5 to which the nozzle was attached. The prolongation will be used for fracture studies prior to the proof-testing of V-5.

The components made by Lenape were machined to a surface finish of about 125 rms. Each was subjected to dye penetrant and ultrasonic inspection in the final machined condition. Liquid penetrant inspection was performed in accordance with Lenape's procedure LP-70-4, Procedure Specification for Liquid Penetrant Examination of Forgings and Bars. No significant indications were found.

Each component was inspected ultrasonically in accordance with Lenape's Specification UT-69-6, Procedure Specification for Ultrasonic Testing and Inspection of Steel Forgings. Testing was performed in the longitudinal mode only. Inspection was conducted using a Branson Sonoray instrument and a 2.25 MHz, 1-in.-diam, Branson Z-201-A transducer; SAE 30W oil was used as a couplant.

Lenape's procedure specified as rejectable any indication "... accompanied by a complete loss of back reflection not associated with or attributed to geometric configuration..." No indications were found that approached this level.

National Forge Co. made the weld test plate, closure flanges and the shell courses. The test plate and closure flanges were made from ingots poured from single melts. The shell courses were made from two ingots, each of which was poured from two melts. National Forge's heat treatment procedure stipulated that the components be (1) normalized at 1640-1750°F, (2) austenitized at 1550-1620°F, (3) quenched in agitated water, and (4) tempered at 1200°F min.

After final forging, the weld test plate was slightly over 8 ft long x 18 in. wide x 6 in. thick. Twelve inches of material from one end of the forging was used for preparation of mechanical test specimens. The ladle and check chemical analyses for this item, heat 1-1075 are:

	C	Mn	P	S	Si	Ni	Cr	Mo	Cu
Ladle	0.22	0.66	0.011	0.012	0.29	0.82	0.38	0.63	0.10
Check	0.22	0.63	0.011	0.012	0.29	0.80	0.37	0.60	0.11

Specimens for mechanical properties testing were stress relieved at 1125 ± 25°F for 30 hr. This operation was done in accordance with Par. N-532.3 of Section III. Mechanical properties tests made on specimens from the weld test plate showed the following results:

Ultimate Tensile Strength (ksi)	Yield Strength (ksi)	Reduction in Area (%)	Elong. (%) in 2 in. Gage Lgth.	C_v Values @ + 10°F (ft-lb)
90	72.5	69	25	59-62-56
93	73.5	70	25.2	60-44-59

National Forge reported that this item was tempered at 1250°F. On completion of tempering, the part was cut into 18-in.-long sections and shipped to Taylor Forge Co. for qualification of the welding procedures to be used in fabricating the vessels.

The material for the closure flanges was melted at National Forge's Irvine, Pa. plant. The ladle and check chemical analyses for this heat, 9-8584 are:

	C	Mn	P	S	Si	Ni	Cr	Mo	Cu
Ladle	0.22	0.69	0.008	0.008	0.27	0.82	0.34	0.63	0.09
Check(1)	0.21	0.70	0.008	0.008	0.27	0.82	0.34	0.62	
Check(2)	0.20	0.69	0.008	0.008	0.26	0.80	0.33	0.62	

The ingot from which the closure flanges were made was essentially a truncated cone and weighed 78,000 lb, including the hot top. The temperature of the ingot on removal from the furnace (preparatory to forging) was about 2400°F; the temperature dropped to about 2200°F by the time forging began. In 40 min the forging operation was completed, at which time the temperature of the part had dropped to 1580°F (determined by optical pyrometer). The completed forging was a solid-round, 41-1/2 in. in diam x 12 ft long.

Post-forging heat treatment began shortly after forging was completed. The part was charged into a furnace and held at 800°F for 4 hr. The temperature was then raised at 100°F/hr until the part reached 1700°F, and held at this temperature for 22 hr. It was then removed from the furnace and air-cooled to about 300°F. With a furnace preheated to 650°F, the part was recharged and held at this temperature for 3 hr. It was then heated at a rate of 75°F/hr to 1100°F, then air-cooled to ambient temperature. On completion of cooling, the part was subjected to a preliminary ultrasonic inspection.

The rough forging was now ready for trepanning, final heat treatment and cutting. The part was rough-turned to 39-1/2 in. OD, and a 14-1/2-in.-diam section was trepanned from the center essentially as shown in Fig. 14. In this form, the forging was subjected to final heat treatment prior to sectioning.

To determine the temperature profile throughout the length of the forging during heat treatment and the cooling rate during quenching, the part was equipped with nine Chromel-Alumel thermocouples (see Fig. 14). Six of these were surface-attached and three were imbedded. All thermocouples were attached prior to normalizing, since the normalize and austenitize heat treatments would continue uninterrupted in the same furnace.

The spread in thermocouple readings during the austenitizing heat treatment is shown in Fig. 15. It will be noted that this part was held in the austenitizing range for 1 hr/in. of metal thickness. Each of the heat treatments applied to this item (and all of the other parts from National Forge) were performed in the vertical position. Quenching was also done with the parts vertical. Following the 10-hr hold period, the part was secured by the lifting lug (see Fig. 14) by an overhead crane, removed from the furnace and quenched. About 50 sec. were required from the time the furnace top was removed and the part completely immersed.

The inlet water piping to the quench tank was arranged to provide agitation of the quench medium. Additionally, a 4-in. IPS water line was installed along the floor of the tank so that the discharge was directed up and through the bore of the forging.

Throughout the 88-min quench period, the part was alternately raised and lowered to facilitate cooling. The water temperature, at the start of the quench, was 56°F, reached a maximum of 72°F in 25 min, and had returned to 58°F on completion of the quench.

The cooling curves for the three imbedded couples are shown in Fig. 16. Data for the surface-attached couples are not shown since these couples recorded essentially water temperature after 2 min in the quench. On removal from the water, the surface temperature of the part was found to be about 150°F.

The forging was not recharged for tempering until the furnace temperature had dropped to below 400°F. This required some 4 hr. Figure 17 shows the spread in thermocouple readings during the tempering cycle.

Material for mechanical test specimens was taken from the 18-in. test piece at the bottom ingot end of the forging (see Fig. 14). This material was removed after the tempering operation and then subjected to a stress relieving heat treatment of 1125 ± 25°F for 30 hr. The results of these tests are:

Ultimate Tensile Strength (ksi)	Yield Strength (ksi)	Reduction in Area (%)	Elong (%) in 2 in. Gage length	C_v Values at +10°F (ft-lb)
86	64	69	25	52-59-47
87	66			33.5-35-39

Six closure flanges were made from this forging and assigned numbers 1 thru 6 beginning at the bottom ingot end (excluding the test piece). The raw stock was then shipped to Taylor Forge who did the finish-machining and inspection.

The ingots for making the shell courses (one ingot provided material for 3 shells) weighed about 200,000 lb. Each was poured simultaneously from two furnace heats at National Forge's Erie, Pa. plant. The ingot configuration was a truncated cone 76 in. at the top and 65 in. at the bottom x 12 ft long, excluding the hot top. It was originally intended that the shell courses would be identified by numbering from 1 thru 6 consecutively. However, it will be seen later that they have been numbered from 4 thru 9 consecutively. When it became necessary to remake one of the ingots, National Forge decided to drop the originally assigned first three numbers and continue consecutively from 4 thru 9. The ladle and check chemical analyses for shells 4, 5, and 6 (heats 3V-913 and IV-3809), are:

	C	Mn	P	S	Si	Ni	Cr	Mo	V
Ladle	0.26	0.75	0.010	0.014	0.26	0.81	0.45	0.61	0.05
Check	0.27	0.77	0.013	0.015	0.32	0.82	0.43	0.58	0.05
Check	0.27	0.77	0.013	0.013	0.33	0.81	0.44	0.59	0.05

The temperature of the ingot on removal from the soaking pit was 2350°F. During the first forging operation (performed on a 3,000-ton open die press) the ingot was reduced to an octangonal configuration measuring 56 in. in cross-section; the length increased by 4 ft. The temperature of the part on completion of the first forging operation was about 1600°F, after which it was returned to the furnace for reheating.

After some 9 hr in the furnace, the temperature of the part had increased to about 2350°F, and it was again removed from the furnace for additional forging. After about 2 hr of further forging, the part was reduced to a 42-in. nominal diam with a usable length of 24-1/2 ft. Post forging heat treatment of the part consisted in the following:

Soon after removing the end-croppings, the usable length was returned to the furnace and "equalized" at 1180°F for 8 hr. On completion of the 8-hr hold, the forging was allowed to furnace cool to 500°F and held at this temperature for 22 hr. Following this 22-hr hold, the temperature was raised at a rate of 90°F to 1180°F and held for 8 hr, then raised at 100°F/hr to 1600°F and held at this temperature for 32 hr. Following the 32-hr hold, the forging was removed from the furnace and air-cooled to 700°F, then returned to the furnace and furnace-cooled to 500°F. It was then held at 500°F for 22 hr. After this 22-hr hold, without cooling further, the temperature was raised at 90°F/hr to 1240°F and held for 30 hr. The forging was then furnace-cooled to below 500°F, thus completing the post-forge heat treatment.

On completion of the post-forge heat treatment, the forging received a preliminary ultrasonic inspection, after which it was saw-cut into three pieces of equal length. (A 24-in. prolongation for fracture studies by ORNL was left on each piece).

The parts were then shipped to National Forge's Irvine, Pa. plant for trepanning, final heat treatment, final machining and inspection. One of the shells, National's No. 6, was equipped with six surface-mounted and three imbedded stainless steel-sheathed Chromel-Alumel thermocouples (prior to normalizing) as shown in Fig. 18. As with the previous forgings, the thermocouples were installed to determine the cooling rate during quenching, and to determine the temperature profile throughout the length of the part during heat treatment, especially during tempering.

Curves showing the spread in thermocouple readings during the normalizing and austenitizing heat treatments are shown in Figs. 19 and 20, respectively. After the austenitizing heat treatment the part was lifted from the furnace with the lifting device shown in Fig. 21. Some 50 sec were required to lift the shell from the furnace and completely immerse it. The details of the quenching operation are essentially the same as those described previously for the closure-flange multiple. The temperature of the water immediately prior to quench was 52°F. It was 74°F on completion of quenching.

Curves showing the cooling rates for the three imbedded thermocouples are shown in Fig. 22. Again, cooling curves for the surface-mounted couples are not included, since they recorded water temperature shortly after immersing. It will be noted that the couple imbedded at 1/4T (from the OD surface) cooled somewhat faster than the pseudosurface couple (located 1/2 in. from the ID surface). It was suspected that the numbering of these two couples somehow became transposed during installation. However, National advised that they rechecked the installation after the tempering operation and confirmed that the arrangement and numbering sequence shown in Fig. 18 are correct.

The surface temperature of shell 6, on removal from the water, was about 125°F. When the furnace had cooled to about 300°F, the part was recharged for tempering. The spread in thermocouple readings for the tempering cycle is shown in Fig. 23.

Shell courses 4, 5, and 6 were made from this ingot, and the test material for same was stress relieved at 1125° ± 25°F for 24 hr. Mechanical test results for vessels 4, 5, and 6 are:

National ID No.	Ultimate Tensile Strength (ksi)	Yield Strength (ksi)	Reduction of Area (%)	Elong (%) in 2 in. Gage Length	C_v Val. at +10°F (ft-lb)	NDTT (°F) P-3 Drop Weight
4	105.5	85	65.4	22	66-55-51	-20
	107.3	87	66.1	22.5	45-54-54	
5	107	86.5	66.3	22.5	44-60-64	-20
	107.5	87	67	22.5	50-53.5-53.5	
6	109.5	88	65.2	22	57-43.5-51.5	-20
	109.5	88	65.9	22.5	39-63-62.5	

The ladle and check chemical analyses for the ingot comprising shells 7, 8, and 9, heats 3V924 and IV3828 are:

	C	Mn	P	S	Si	Ni	Cr	Mo	V
Ladle	0.27	0.87	0.007	0.012	0.32	0.74	0.34	0.64	0.04
Check	0.24	0.84	0.009	0.011	0.35	0.72	0.35	0.66	0.04
Check	0.25	0.86	0.009	0.012	0.35	0.72	0.34	0.65	0.04

Mechanical test results of specimens from shells 7, 8, and 9 are:

National ID No.	Ultimate Tensile Strength (ksi)	Yield Strength (ksi)	Reduction of Area (%)	Elong (%) in 2 in. Gage Length	C_v Val. at +10°F (ft-lb)	NDTT (°F) P-3 Drop Weight
7	106.25	85	65.9	23	57-40-44.5	-20
	103.5	82.5	66.5	22.5	48.5-50-48	
8	103	83	68.6	24	78-71-79	-20
	102.75	82	69	24	85-69-67	
9	107	87.5	67.9	23	62.5-60-55	-20
	107.5	88.5	67.7	23	38.5-72-74	

It will be noted that the tensile properties listed in the two preceeding tables are somewhat atypical of A-508 Cl 2 materials. (ASTM A-508 requires that Class 2 materials have minimum yield and ultimate tensile strengths of 50,000 and 80,000 psi respectively). The yield strength reported for the shells is about equivalent to the anticipated ultimate tensile strength of the longitudinal and circumferential submerged-arc welds to be used in the vessels. To accomplish the program objectives, it was concluded that the shell courses should have mechanical properties within the range of 50,000 - 75,000 psi yield (2% offset), and 80,000 - 90,000 psi ultimate tensile strength.

Working with material from vessel V-5, Canonico[2] developed information (shown in the following table) which indicated that the strength properties could be lowered to a satisfactory level without a significant loss in toughness.

Summary of Strength and Impact Properties on Intermediate Vessel Cylindrical Course Material A-508, Class 2

Temper Temperature (Hold time: 6 hr)	σ_u	σ_y	C_v 10°F	C_v 40°F	C_v 150°F	NDTT (°F)
1280[a]	106,000 (avg)	85,000 (avg)	55	100		-20
1287				98		
1298				101		
1303	96,250	78,695		100		
1307				98		
1310	92,930	73,685		95	142	
1311				95		
1318				88		
1328				97		
1330				85		
1331	95,840	69,175	75	80	134	
1343				48		
1344	96,035	65,250				
1348				47		

[a]Data obtained by National Forge, verified by ORNL.

Canonico's data indicate that a retemper at 1320 ± 25°F would provide acceptable mechanical properties. In considering a temperature of this magnitude there was some concern about the lower transformation temperature which is thought to lie between 1325 - 1350°F. The vendor advised that his furnaces were controllable within ± 15°F in the temperature range proposed.

On February 3, 1971, National Forge equipped shell 9 with 7 thermocouples as shown in Fig. 24. One couple was situated at 1/4T from the OD, 5 on the OD surface, and one (No. 4) on the ID surface. Again, tempering was done in a vertical furnace, with couple No. 1 toward the top of the furnace.

The retempering profile for shell 9 is shown in Fig. 25. It may be seen that the couple on the ID surface (No. 4) lagged behind the others on heat-up. National Forge continued with the heat-up period some 15 hr until it, too, was well within the minimum tempering range before the hold period was started. Most couples recorded about 1320°F during the hold period except No. 4, which never exceeded 1310°F. In retrospect, this curve is quite similar to Fig. 9 which shows the tempering profile for 3 hemi heads.

On completion of the retempering cycle, mechanical testing, performed on prolongation material showed the following results:

Ultimate* Tensile Strength (psi)	Yield Strength (psi)	C_v Values @ +10°F (ft-lb)
91,500	72,000	66-40-33
92,250	71,500	62.5 - 79 - 55.5

*All test specimens stress relieved at 1125 ± 25°F for 24 hr.

Canonico performed additional metallographic studies on tempered and retempered materials. These studies have shown that there is no apparent difference in the microstructure of the retempered material and the original material tempered at 1270°F.

Based on the obvious success in the retempering of shell 9, it was decided to proceed with retempering the remaining shells in a like manner. The mechanical properties of the retempered shells are:

Table 4.5. Test results after retempering at 1320°F

Shell	Ultimate Tensile Strength (ksi)	Yield Strength (ksi)	Reduction of Area (%)	Elong. (%)	C_v at +10°F (ft-lb)	Percent Shear	Lateral expansion
4	93.75	72	71	27	48	41	0.046
					50.5	37	0.044
					52	40	0.043
	91.5	69.5	67	26	53.5	40	0.046
					61.5	37	0.057
					61	40	0.050
5	94.75	72.5	68.4	25.5	65	47	0.059
					60	43	0.060
					77.5	40	0.061
	93.75	72.5	69.7	25.5	66	43	0.060
					59	45	0.059
					77	46	0.062
6	94	72	71.8	27	60.5	41	0.048
					65.5	40	0.055
					70.4	40	0.059
	94.5	74	70.4	27	53.5	39	0.045
					60	40	0.052
					61	37	0.050
7	92	71.5	71.2	27	71	45	0.060
					53.5	34	0.047
					72	40	0.064
	91.25	67.5	68.8	25	51	40	0.044
					55.5	31	0.046
					57	34	0.049
8	91.25	71.5	68.4	26	86.5	45	0.073
					61.5	43	0.052
					70.5	41	0.060
	91.75	71.5	70.4	26.5	66.5	41	0.059
					69.5	34	0.054
					58.5	32	0.050
9	91.5	72	69.9	27	66	43	0.060
					40	35	0.039
					33	33	0.031
	92.25	71.5	71	27	62.5	42	0.055
					79	47	0.061
					55.5	37	0.049

Each of the shell courses was inspected ultrasonically by both longitudinal and shear modes from the OD surface. Neither surface was tested to determine the surface finish; however, it was obvious that they were considerably better than the specified 250 rms finish, except for isolated scratches.

Longitudinal-wave inspection was performed with a Sperry reflectoscope, type UR, style 50E-485. Inspection was done at a frequency of 2.25 MHz, using a 1-in. diam, internally grounded transducer, and 30W SAE motor oil. Each of the shells was inspected in accordance with Par. N-322.1(a) of Section III.

To calibrate for longitudinal-wave inspection the transducer was placed over a smooth (presumably) defect-free area and the back-reflection signal adjusted to about 75% of full screen height on the cathode ray tube (CRT). The entire OD surface was scanned with each scan path overlapped at least 10% to assure complete coverage. The shells were also scanned from the ends. All indications causing complete loss of back-surface reflection (complete loss is assumed when the back-reflection signal falls below the 5% level) were to be considered rejectable. No indications of this magnitude were found in either forging.

The same instrument used for longitudinal-wave inspection was retained for shear-wave testing, except that a 1 in. x 1 in. 45° transducer was attached, and inspection was performed at a frequency of 1 MHz. The instrument was calibrated from a 3/8-in.-deep x 1-in.-long OD notch installed in the prolongation retained by National Forge. Again the reflected signal was adjusted to about 75% of full screen height. The shells were scanned tangentially from opposite directions, and no indications of recordable (signals reaching 50% of screen height) or rejectable magnitude were found in either shell.

Prior to magnetic particle inspection, each shell was cleaned of foreign particles, dirt, etc., with a degreasing compound. The magnetizing equipment was a Magnaflux model CRQ-12, 5000-ampere machine. The test medium was Magnaflux No. 7C Black Oil Suspendible Magnetic Powder, suspended in type VV-K-211 kerosene. The suspension was checked prior to inspection by testing with an ASTM 100-ml centrifuge tube to assure a suspension reading of at least 1.7 to 2.4 cc.

Two 4-lead, high amperage cables, aligned with each other but located on opposite ends were attached to each end of the shells. The power source was then adjusted to produce 500-700 amps per in. of diameter (per in. of greatest width in a plane normal to the current flow). A field indicator was placed on top dead center and near the mid-length. With the current on, the wet magnetic particles were applied by spraying. In this condition the part was visually inspected for indications. The field indicator showed well defined patterns in all locations.

The parts were recleaned using Dryclean Type P-S-661. A central conductor was placed through the ID bore. The conductor was then placed around the periphery of the bore with the power source adjusted to produce 500 to 700 amps per in. of diameter. The maximum current applied at this time was 3800 amps. This time the parts were sprayed on both OD and ID surfaces with the current closed during application of the liquid suspension. The field indicator was positioned at various locations along the two surfaces; in each position a well defined pattern was evident.

Following inspection by the central conductor method, the parts again were wiped and recleaned with a solvent. The shells were then wrapped with 4-coil turns with the equipment adjusted to produce 3000 ampere-turns. Again the setting was verified with an indicator positioned at various points on each side of

the coil. All surfaces were inspected for defects.

During the above inspections three very small indications (hair-line in width but less than 3/16 in. in length) were found. The longest of these (on shell 8) was explored by grinding but disappeared after removal of probably less than 2 mils thickness. The remaining indications were well within the requirements of Par. N-322.2

In compliance with the purchase order each shell was stamped to indicate the location of the thermocouples during the heat treatment cycle. The numbers (lightly stamped on the OD surface) represent the numbers that were assigned to the thermocouples. A stamping does not appear in the area where thermocouple 4 was installed, buts its approximate location can be found with respect to thermocouple 2 (see Fig. 24). By this method it was considered that one should be able to determine the maximum temperature, reached during tempering, for 7 precise locations.

Typical final dimensional inspection results for the shells are:

		Shell 8	Shell 9
	Req'd (in.)	Actual (in.)	
Length (nom)	78-/2 $^{+1/2}_{-000}$	78 13/16	78-3/4
ID (nom)	27 ± 1/16	26 15/16	26-15/16
OD (nom)	39	39	39
Wall tk (nom)	6 $^{+1/16}_{-000}$	6-1/32	6 1/32

On completion of dimensional inspection the parts were shipped to Taylor Forge plant in Paola, Kansas for assembly.

3. FABRICATION OF THE INTERMEDIATE TEST VESSELS

The specification required that the location and orientation of components in each vessel be documented. The specification stated that the "... Seller shall provide an identification of the cylindrical shell material with respect to location in the original plate or forging for all vessels fabricated from the same heat. ...identity of the top and bottom plate surfaces with respect to ingot orientation and with respect to longitudinal direction of rolling shall be continually maintained throughout all of the Material Manufacturer's process operations. Identity of forging material shall be similarly maintained."

National Forge identified the shell courses (in the original ingots) as shown in Fig. 26. Figure 27 shows the letter designations for each shell and the respective vessels into which they are installed. In each case the end of the shell nearest the bottom of the ingot is welded to the hemispherical head, and the end nearest the top of the ingot to the transition pieces.

Vessels V-1 and V-2 are fabricated as shown in Fig. 1. Vessel V-5 is also fabricated in a like manner, except that a 9-in. ID nozzle has been installed in the "test area." Vessels V-3 and V-4 contain a single longitudinal seam which extends for the length of the shell. Vessel V-6 contains three girth seams, with one situated midway between the two shown in Fig. 1. Vessel V-6 also contains two longitudinal seams located 180° apart.

Taylor Forge qualified three welding procedures:

WP-379, an all-submerged-arc procedure for welding of the longitudinal seams (see Fig. 28a).

All of the shell courses originally were seamless. Basically, the procedure for making the all-submerged-arc longitudinal seams requires:

1. machine the OD groove as shown in Fig. 28a;
2. check groove with magnetic particles;
3. preheat 300-500°F and maintain until post weld heat treat (PWHT);
4. filler wire: RACO-127, 3/16 in. diam, single wire feed;
5. interpass temperature - 500°F maximum;
6. flux: Linde type 0091, size 65 x 200;
7. travel speed: approximately 12 in./min;
8. current: ac, 750A, 30-32V;
9. on completion of the OD side, the ID is ground to solid weld metal and welded in much the same manner as the OD.

WP-380, a combination submerged-arc and shielded metal-arc procedure (see Fig. 28b).

WP-381, an all shielded metal-arc procedure for attaching the nozzle.

The basic parameters for procedure WP-379 (longitudinal seams) are also applicable to WP-380 (circumferential seams), except that the ID portion of WP-380 is applied with the shielded metal-arc process.

The joint configuration for the shielded metal-arc procedure (WP-381) is shown in Fig. 28c. This procedure is used for all repair welding and for attachment of a nozzle to vessel V-5. Each half is prepared by machining and is inspected with magnetic particles prior to fit-up. The first three passes are applied with 3/32-in.-diam electrodes using 140 to 180A and 24 to 26V. Subsequent passes are applied with 3/16-in.-diam electrodes with amperage and voltage ranges of 190 to 240 and

24 to 26 respectively, The nature of the welding current for all passes is direct-current reverse polarity (DCRP). All welding is done in the flat position using Alloy Rods type 8018 NM electrodes.

The weld test plates were subjected to a final PWHT at 1125 ± 25°F for 28 hr.

A weld deposit chemistry analysis from Procedure WP-379 (Rayco heat 34445, flux lot 3977) showed:

C	Mn	P	S	Si	Cr	Mo	Ni	V
0.10	0.86	0.016	0.021	0.19	0.06	0.49	0.06	Trace

Mechanical properties from an all-weld metal tensile specimen from the 1/4T location are:

UTS (ksi)	YS (ksi)	Elongation (%)	Reduction of area (%)
85	71.5	28	62.5

The results of Charpy V-notch tests made on full-size specimens tested at +10°F are:

Location	C_V (ft-lb)	Mils lateral expansion	Percent ductile fracture
Parent metal 1/4T	36-40-45	25-28-34	30-40-40
HAZ 1/4T	43-47-49	34-41-38	50-50-50
Weld 1/4T, top	90-96-97	66-57-70	80-80-80
Weld 1/16 in., bottom surface	77-84-74	53-53-52	80-95-80

A deposit analysis from procedure WP-380 (RACO heat 34445, flux lot 3977) gave:

C	Mn	P	S	Si	Cr	Mo	Ni	V
0.13	0.77	0.015	0.020	0.19	0.07	0.50	0.08	Trace

Mechanical properties from an all-weld tensile specimen from the 1/4-T location are:

UTS (ksi)	YS (ksi)	Elongation (%)	Reduction of area (%)
81.5	69.4	28	64.9

The results of Charpy V-notch tests made on full-size specimens tested at +10°F are:

Location	C_v (ft-lb)	Mils lateral expansion	Percent ductile fracture
Parent metal 1/4T	37-55-60	29-41-46	20-25-25
HAZ 1/4T	48-57-62	40-45-49	40-40-50
Weld 1/4T, bottom	87-92-92	66-63-68	90-80-80
Weld 1/16 in., top surface	84-91-95	66-73-74	80-80-80

A deposit analysis from procedure WP-381 (Alloy Rods heat 01L3333, lot F25827A, and heat CTY538, lot B012A27A) showed:

C	Mn	P	S	Si	Cr	Mo	Ni	V
0.09	1.33	0.012	0.012	0.52	0.05	0.52	0.99	0.02

Mechanical properties from an all-weld tensile specimen from the 1/4-T location showed:

UT(ksi)	YS(ksi)	Elongation (%)	Reduction of area (%)
95.3	84.8	29	70.8

The results of Charpy V-notch tests made on full-size specimens tested at +10°F are:

Location	C_v (ft-lb)	Mils lateral expansion	Percent ductile fracture
Parent metal 1/4 T	78-78-68	56-56-51	40-40-40
HAZ 1/4T	86-96-128	62-75-64	60-60-90
Weld 1/4T, top	75-73-85	60-57-65	70-70-80
Weld 1/16 in., bottom surface	76-72-70	65-62-61	80-80-80

The vessels and the components comprising each are as follows:

	Lenape Forge ID No.		National Forge ID No.	
Vessel No.	Flat Head	Hemi Head	Shell	Transition Pc
V-1	3	1	4	1
V-2	2	2	6	2
V-3	1	3	9	3
V-4	4	4	8	4
V-5	5	5	5	5
V-6	6	6	7	6

The location of thermocouples 1, 2, 3, and 4 (used during retempering) was situated in a reasonably straight line (see Fig. 24), and these locations were well documented and identified. From the furnace charts available, it would be rather easy to determine fairly accurately the temperature profile along this line during heat treatment. It was thus decided to locate the longitudinal seams for vessels V-3, V-4, and V-6 along this line.

The circumferential seams for vessels V-1 thru V-5 will be referred to as G-1 (representing the top or transition-to-shell

girth seam), and G-2 (representing the bottom, or hemi head-to-shell). As for vessel V-6, the transition section-to-shell seam will still be known as G-1; the middle girth seam is designated as G-2, and the hemi head-to-shell seam is designated as G-3.

For radiographic inspection, each circumferential weld seam is divided into ten equal segments with a numbering system of 0 thru 9. Each segment is identified by a pair of numbers, such as 0-1, 1-2, etc. These are permanently stenciled on the parts. These numbers also appear in their respective locations on the applicable radiographs. In this manner the radiographs can be matched with a specific location on the weld.

Subsequent references to repaired areas will be identified by listing the weld seam identification and the radiographic location numbers, eg., G-1 area 5-6. This will mean that the repairs were made to the transition section (top) to shell weld (G-1), and that radiographic location 5-6 was involved specifically.

3.1 Vessel V-1

Production work was first begun on vessel V-2. However, when it was learned that repairs to seam G-2 would be so extensive as to require complete removal and rewelding, it was decided to concentrate all efforts toward vessel V-1 in order to get the testing program under way. The fabrication details for vessel V-1 are as follows:

11-71 Separate (by oxy-acetylene cutting) the shell course from the prolongation and apply an Intermediate Stress

Relief (ISR) of 1100 ± 25°F for 1-1/2 hr* to these parts. It should be noted that the specification required that the shell prolongation be subjected to the same fabrication procedures as the vessel. In any subsequent references to heat treatment of the vessel it should be understood that the respective prolongation received the same heat treatment.

*The ISR procedure requires that the parts be held at the specified temperature for 1-1/2 hr. This normally requires about 8 hr for heat-up, and some 12-13 hr to furnace cool to 600°F.

12-3-71 Seam G-2 (hemispherical head-to-shell) was completed followed by an ISR of 1100°F for 1-1/2 hr, then radiographed. Defects interpreted as slag inclusions were found in the radiographs representing areas 5-6 (8"L), 6-7 and 7-8. The indication in areas 6-7 and 7-8 was continuous and extended for about 20 in.

12-10-71 The affected areas were removed by grinding and/or air-arc gouging and repaired. Following repairs the parts were subjected to an ISR of 1100°F for 1-1/2 hr and reradiographed. The areas previously in question were found to be acceptable, but on reviewing the radiographs they reported finding another rejectable indication (location not noted). This area was then repaired but an ISR was not applied at this time. Instead, the parts were kept under preheat until seam G-1 was completed.

When the machining and drilling were completed on the flat head, it was subjected to a 1-hr stress relieving heat treatment at 1150°F.

12-15-71 Seam G-1 was completed and subjected to an ISR of 1100°F for 1-1/2 hr. Seam G-1 was radiographed and all films were reported to be acceptable.

12-27-71 Applied final post weld heat treatment (PWHT) of 1150°F for 6 hr. All welds were reradiographed. A rejectable indication, about 4 in. long, was found in area 6-7, seam G-2. This area was rerepaired and the vessel again was subjected to a 6-hr PWHT at 1150°F on 1-5-72. Radiographs made after final PWHT were reviewed and found to be acceptable. Total intermediate and final PWHT were 18 hr.

Longitudinal and shear wave ultrasonic inspection were performed on the two circumferential seams and 7 in. on either side of the welds, where accessible. Documentation was presented to verify that their technician was certified as a Level II ultrasonic examiner in accordance with SNT-TC-1A. Inspection was performed with a Picker Mark 7 instrument equipped with a db attenuator to facilitate transfer from the reference block to the vessel.

The reference block shown in Fig. 29 was fabricated from unused test material and was in the quenched and tempered condition (essentially the same as the vessel components). All welds were ground smooth and reasonably flush with the base plate.

Longitudinal wave inspection was performed on the base metal for a distance of 7 in. on each side of the welds to detect reflectors that may interfere with interpretation of shear wave inspection. Longitudinal wave inspection was also performed on the welds in accordance with Par. N-625.

Shear wave examination of the welds was performed at a frequency of 2.25 MHz. The surface finish of the reference block and the vessel was in most cases better than 125 rms. To establish a distance-amplitude correction (DAC) curve, a 45° transducer was placed on the reference block, and the amplitude of reflection from each of the holes was plotted on the instrument screen.

Taylor Forge inspection procedure requires that all indications producing signals exceeding 50% of the height of the DAC curve be recorded. Those signals equal to or exceeding the height of the DAC curve or longitudinal wave signals causing 100% loss of back surface reflection were to be considered rejectable. No rejectable or recordable indications were found in this vessel.

The vessel was then subjected to a hydrostatic pressure of 12,500 psi and allowed to stand for about 2 hr. During this time no leakage or loss in gage pressure was observed.

The vessel was then dismantled and cleaned on both ID and OD surfaces by sandblasting, prior to magnetic particle inspection. All surfaces were then dried and wiped clean.

The magnetizing unit was a Magnaflux type KH-09. Initially a magnetic field was induced with the yokes positioned parallel to the axis of the welds to detect longitudinally oriented defects. Then a second magnetic field was induced with the yokes positioned normal to the longitudinal axis of the welds to detect transverse defects. The current range was 100 DC amps (min) per in. of yoke spacing. Magnaflux Product No. 1, gray magnetic powder, applied with a hand bulb, was sprayed between the yokes. No evidence of defects was observed.

The vessel head was reinstalled and the assembly was pressurized for leak testing as follows:

25 psig of N_2
4 psig of He
21 psig of N_2 for a total of 50 psig

The access nozzle was then sealed with masking tape and allowed to set for several hours. The specification required that the vessel remain under pressure for 1-1/2 hr prior to testing; however, in most cases the hold period was much longer.

A Veeco model MN-90 leak detector, certified to a sensitivity of 6×10^{-11} std cc/sec, was used to test the seal for leakage. The sensitivity of the machine with the sniffer attached was determined to be 0.26×10^{-8} std cc/sec. A standard leak, rated at $9.5 \times 10^{-8} \pm 10\%$ std cc/sec was used.

The maximum acceptable leak rate was specified as 5.8×10^{-5} std cc/sec. In this one instance the leak rate was just slightly above the maximum. In all subsequent vessels, the leak rate was well below this amount.

All subsequent vessels were subjected to essentially the same final inspection procedure as noted above.

3.2 Vessel V-2

6-10-72 Separate prolongation from shell course and apply an intermediate stress relief (ISR) of 1100 ± 25°F for 1-1/2 hr to both parts, using the ASME required heating and cooling rates.

6-24-71 Complete the hemispherical head-to-shell (G-2) weld. Maintain preheat.

6-39-71 Complete seam G-1 and apply ISR of 1100 ± 25°F for 1-1/2 hr. Radiographic inspection showed crack-like defects in seam G-1 area 4-5, and similar defects in G-2 areas 5-6 and 6-7.

7-9-71 The affected areas were repaired by air-arc gouging and rewelded. All repairs were made using the shielded metal-arc process.

7-13-71 On completion of repairs the vessel was subjected to an ISR of 1100 ± 25°F for 1-1/2 hr. The repaired areas were reinspected radiographically and it was found that the original objectionable defects were essentially unchanged. It would be well to note that all radiographic inspection performed by Taylor Forge was done with a Co^{60} source.

7-17-71 The second repair effort was completed and the vessel again was subjected to an ISR of 1100 ± 25°F for 1-1/2 hr. Reinspection by radiography showed that area 4-5 seam G-1 was now acceptable. The indications in seam G-2 were still present; however, the configurations were different and the locations were slightly shifted.

7-22-71 The third repair was completed and the repaired areas reradiographed. Area 5-6 was found to be acceptable. The indication at area 6-7 was still present, but the shape of it again was changed somewhat. Taylor Forge then advised that they thought "some of their problems were the result of stresses."

To aleviate the "stresses" they returned the vessel to the furnace for a 6-hr stress relief at 1100°F.

7-29-71 The fourth repair was completed and the part was subjected to an ISR of 1100°F for 1-1/2 hr. Again, radiographic inspection showed that area 6-7 was essentially unchanged.

8-3-71 For this repair the shop personnel were advised to gouge the affected areas from both the OD and ID. The welder making the repairs later advised that he repaired from the ID surface first. Finding what he thought was the indication he was seeking, he repaired the area but didn't continue with further repairs from the OD surface.

8-5-71 Applied an ISR of 1100°F for 1-1/2 hr and reradiographed. The indications found during the previous inspection were still present.

They then gouged out an area from the OD the width of the weld by about 15 in. long by 5-1/2 in. deep. The ends of the gouged area were tapered at about 35°. For this repair the electrodes were baked at 750°F for 2 hr prior to welding. "To help eliminate high stresses" they performed what is known as "block welding". In this procedure the welding was performed by depositing small amounts to opposite sides of the groove and joining these deposits by filling the intervening spaces. Meticulous attention was paid to preheat and the interpass temperature was maintained below 500°F. Two welders were available constantly - when one tired the other replaced him. After the application of each half-inch of vertical height, the weld metal was cleaned and subjected to

magnetic particle inspection. On completion of repair welding,and in lieu of the usual ISR of 1100°F for 1-1/2 hr, the part was heated to 750°F, held for a very short period, and allowed to cool to room temperature. The weld was then reinspected by radiography and found to be acceptable. On 8-9-71 they applied a final stress relief of 1150 ± 25°F for 6 hr. They then reported that they were ready for final inspection of the vessel.

On August 30, 1971 final inspection was attempted. Ultrasonic inspection revealed two unacceptable indications in seam G-1 and six in seam G-2. During subsequent discussions with Taylor Forge they advised that they had decided to completely remove seam G-2, which contained rejectable ultrasonic indications in more than 50% of the circumference. Since the existing seam (G-2) contains about equal amounts of shielded metal-arc and submerged-arc welding, a new seam, containing hopefully all submerged-arc welding, would be more typical of a commercial pressure vessel. They further advised that they would again attempt to repair the relatively small indications in seam G-1 by the conventional method before considering complete removal.

Some consideration was given to modifying the submerged-arc welding procedure; however, this idea was soon abandoned. During this interim it was found that some of the shell courses contained a very strong circumferentially oriented magnetic field. It was suspected that the residual magnetism (resulting from incomplete degausing by National Forge) may have contributed to their welding problems. The affected shells were then returned to National Forge for additional degausing.

10-20-71 Removed the hemispherical head by flame cutting and gave the parts an ISR of 1100°F for 1-1/2 hr.

11-22-71 Completed repairs to seam G-1 and applied an ISR of 1100°F for 1-1/2 hr.

12-2-71 Reported finding a rejectable ultrasonic indication 6"L x 2"W x 2"D (from ID) in seam G-1 and repaired same. Applied ISR of 1100°F for 1-1/2 hr on 12-3-71.

12-4-71 Ultrasonic inspection, following the ISR, revealed another rejectable area in seam G-1, area 8-9 which was 10"L x 2"W x 2"D, from the OD. The area was again repaired and given another ISR of 1100°F for 1-1/2 hr on 12-9-71. Subsequent radiographic inspection showed the seam to be acceptable.

12-15-71 Completed rewelding of seam G-2 and applied an ISR of 1100°F for 1-1/2 hr. Radiographic inspection showed rejectable indications in:

Area	Size
0-1 1-2	12"L near ID
5-6	10"L near OD
7-8 8-9	20"L near OD

12-30-71 Repairs completed and the vessel again subjected to an ISR of 1100°F for 1-1/2 hr.

1-7-72 Radiographic inspection of seam G-2 showed the following unacceptable areas:

Area	Size
0-1	12"L near OD
1-2	8"L near OD
7-8	10"L near OD

1-13-72 The affected areas were repaired, reradiographed, and subjected to an ISR of 1100°F for 1-1/2 hr. All repaired areas appeared to be acceptable.

1-19-72 Applied the final stress relief of 1150°F for 6 hr. Final radiographs are acceptable.

On February 1, 2 and 3, 1972 the vessel was subjected to final inspection and found to be acceptable. Calculations showed that the leak rate of the access nozzle was 0.1×10^{-6} std cc/sec.

3.3 VESSEL V-3

Vessels V-3, V-4 and V-6 contain longitudinal seams, and these welds were made during the early stages of fabrication. On completion of the welds it was found, by radiographic inspection, that each contained serious cracking scattered throughout the length of the welds. Taylor Forge decided to remove the weld metal completely by machining and reweld them. In remaking these joints, they prepared a double-J groove which proved to be somewhat wider at both the OD and ID surfaces than the original weld groove.

On rewelding the longitudinal seam, no rejectionable indications were found by radiographic inspection. Also, both circumferential seams were completed and accepted without repairs.

During final inspection one small, borderline, shear-wave, ultrasonic indication was found near the ID of the longitudinal seam, located about 12 in. from seam G-2. The indication being borderline in severity, it was decided not to make further repairs.

All other final inspection requirements were met. The completed vessel was subjected to 10 hr of ISR at 1100°F and 6 hr of final PWHT at 1150°F.

3.4 VESSEL V-4

7-27-71	Longitudinal weld seam was completed and the parts subjected to an ISR of 1100°F for 1-1/2 hr. Radiographic inspection revealed cracks for the full length of the weld seam.
1-12-72	The OD portion of the longitudinal seam was removed and rewelded. The part was then given a 1-1/2 hr ISR at 1100°F.
1-28-72	The ID portion of the longitudinal seam was removed and rewelded and the part again subjected to an ISR of 1100°F for 1-1/2 hr.
2-2-72	Welding of seam G-2 was completed and the parts given an ISR of 1100°F for 1-1/2 hr.
3-4-72	Welding of seam G-1 was completed and another ISR of 1100°F for 1-1/2 hr was applied.
3-8-72	Applied final PWHT of 1150°F for 6 hr.
3-27-72	Welds were radiographed and rejectable indications were found in areas 2-3, 4-5, and 9-0 of seam G-1 and areas 1-2, 2-3, and 3-4 of seam G-2. The longitudinal seam was acceptable.
4-18-72	Repairs were completed and the parts given an ISR of 1100°F for 1-1/2 hr. Areas 4-5 and 9-0 in seam G-1 were acceptable; area 2-3 was still unacceptable. Repairs to areas 1-2, and 2-3 in seam G-2 were acceptable; area 3-4 was still unacceptable.

4-21-72 Repairs were completed and given an ISR of 1100°F for 1-1/2 hr. The rejectable indication in seam G-1 was still apparent, but the one in seam G-2 was considered to be acceptable.

4-29-72 Area 3-4 seam G-2 was repaired and given an ISR of 1100°F for 1-1/2 hr. The repairs were acceptable. The vessel was then given the final PWHT at 1150 ± 25°F for 1-1/2 hr.

5-23-72 All welds were reradiographed and found to be acceptable.

6-19-73 All final inspection requirements were met.

3.5 VESSEL V-5

1-25-72 Attach nozzle to shell by shielded metal-arc process. (see Fig. 13).

2-12-72 Apply ISR of 1100°F for 1-1/2 hr.

2-23-72 Repair rejectable indication (found by radiographic inspection) at area 1-2 in nozzle weld (see Fig. 30).

Note 1: Records do not indicate that an ISR was applied after this repair.

3-9-72 Complete hemi head-to-shell weld (seam G-2) and apply ISR of 1100°F for 1-1/2 hr.

3-22-72 Complete welding of seam G-1 and apply ISR of 1100°F for 1-1/2 hr.

4-20-72 Make repairs to areas 6-7 and 9-0 in seam G-1. Also repair nozzle weld at areas 1-2, 2-3, 8-9, and 9-10.

Note 2: It could not be learned why the nozzle repairs made at this time were not made at the same time this weld was first repaired on 2-23-72.

6-14-72 Apply PWHT of 1150°F for 6 hr, and radiograph all welds.

6-23-72 Repair rejectable indications in seam G-1 areas 1-2 and 6-7. (See Note 1.)

7-19-72 Apply PWHT of 1150°F for 6 hr.

Ultrasonic inspection in November revealed rejectable indications in seam G-1.

12-28-72 Repair defects in seam G-1 at areas 5-6 and 6-7. On completion of repairs on 1-2-73 the vessel was subjected to a final PWHT at 1150°F for 6 hr. Total PWHT time applied to the vessel, including ISR at 1100°F and PWHT at 1150°F was 24 hr.

Taylor Forge was notified by ORNL that it was most important that vessel V-5 (and vessel V-6) be completed as soon as possible so that the testing of the vessels could proceed. It was considered of particular importance that ORNL receive the shell prolongations, since several weeks of specimen testing is necessary prior to actual testing of a vessel. Taylor Forge advised that their preliminary ultrasonic inspection showed that seam G-2 and the nozzle weld were acceptable. But, the top circumferential seam (G-1) in the vicinity of area 6-7 still contained two rejectable indications, each about 1 in.

long and located about 2 in. from the ID surface. The ultrasonic signals reportedly were twice the acceptable level. (At this time the rejectable indications remaining in vessel V-6 were detailed; however, these will be discussed in Section 3.6.)

It was decided that if during final inspection the condition of the welds was no worse than described by Taylor Forge, ORNL would accept them as is.

Subsequent inspection on 1-11-73 showed that the nozzle weld and seam G-2 indeed were acceptable. The location and severity of the rejectable indications found in seam G-1 are:

Scanning from the shell side an almost continuous signal was noted while scanning between areas 5-6 and 6-7, but only four areas were found that produced rejectable signal levels.

1. 2 in. from 7 toward 6, an indication 4-1/2 in. from the OD produced a signal 100% of DAC for about 1/2 in. of circumferential travel.

2. 3 in. from 7 toward 6, an indication 4 in. deep, near the center of the weld, produced a signal 100% of DAC for 1/2 in. of circumferential travel.

3. 7 in. from 7 toward 6, an indication 4 in. deep, near the center of the weld, produced a signal 150% of DAC for 3/4 in. of circumferential travel.

4. 10-1/2 in. from 7 toward 6, an indication 4-1/2 in. deep, located just to the shell side of the center of the weld, produced a signal 100% of DAC with 1/2 in. of circumferential travel.

Scanning from the opposite side of the weld only one indication was found that exceeded the height of the DAC curve. It was located 6-1/2 in. from 7 toward 6 (probably indication 3 noted above), 4-1/2 in. deep and produced a signal 100% of DAC, with 1/2 in. of circumferential travel.

A few indications were found which did not exceed the height of the DAC curve and the locations of these are:

Nozzle Weld

At point 2 a spot-type indication was found at 3/4T (from the OD) that gave a signal 75% of DAC. This indication was also detectable by scanning from the ID, but it only came up to 25% of DAC from this side.

Two inches from point 5 toward 4 an indication 1/2 in. long and producing a signal 50% of DAC was found at 3/4T. This indication could not be found from the ID.

About mid-way between points 8 and 9 a small spot-type indication was found at 1/2T that gave a signal 75% of DAC.

Seam G-1

At point 2 a small spot-type indication was found that produced a signal 90% of DAC.

All of the other final inspection requirements of the vessel were met and the vessel was accepted.

3.6 VESSEL V-6

7-71 Longitudinal weld seam was completed and the parts subjected to an ISR of 1100°F for 1-1/2 hr. Radiographic inspection revealed cracks for the full length of the weld seam.

7-22-71 Remove the longitudinal weld seam by machining.

2-10-72 Reweld longitudinal seam essentially as described for Vessel V-4 and apply ISR of 1100°F for 1-1/2 hr.

3-23-72 Separate prolongation and flame-cut shell course into two equal lengths. Apply ISR of 1100°F for 1-1/2 hr.

4-24-72 Rejoin 2 shell sections to form middle girth seam (G-2, see Fig. 31.)

Note 1: Records do not show that an ISR was applied after completion of G-2. However, it was reported that the preheat was maintained until the next weld was started.

5-23-72 Complete seam G-3. See Note 1 above.

6-5-72 Repair areas 1-2, 2-3, 3-4 and 4-5 of seam G-2. See Note 1 above.

6-13-72 Complete welding of seam G-1.

6-16-72 Records show that the vessel was subjected to a heat treatment of 750°F and held for 1-1/2 hr.

6-22-72 Repair area 4-5 of seam G-1.

Note 2: At this point Taylor Forge advised that they made repairs where the need was indicated. They then inspected the repaired areas ultrasonically, before cooling was complete. If repairs were found to be successful (i.e., no rejectable ultrasonic indications), they proposed to apply a PWHT. If not, they would merely proceed with further repairs.

6-27-72 Seam G-1: Repair areas 0-1 and 5-6; rerepair area 4-5.
Seam G-2: Repair areas 0-1 and 6-7; rerepair area 4-5.

7-19-72 Seam G-2: Rerepair area 0-1 and repair area 5-6.
Seam G-1: Rerepair area 0-1.

10-3-72 Seam G-1: Rerepair area 0-1.
Seam G-2: Rerepair areas 0-1 and 4-5.

10-9-72 Apply ISR of 1100°F for 1-1/2 hr.

10-15-72 Seam G-2: Rerepair area 3-4.

10-21-72 Apply ISR of 1100°F for 1-1/2 hr.

10-23-72 Apply PWHT of 1150°F for 6 hr.

11-4-72 Longitudinal and shear wave ultrasonic inspection was performed on all seams. Rejectable shear wave indications were found in each of the three circumferential seams, but no rejectable indications were found in either of the longitudinal seams (see Fig. 31 for seam orientation). The rejectable indicatons ranged in magnitude from 100% of DAC to 3 times the height of the

reference curve. The indications were found intermittently around the seams, and the rejectable areas comprised about 30% of the circumference of each girth seam. Most of the indications were found near the ID, but some were near the 3/4T and 1/2T levels.

Some indications were detectable from four directions from the top surface. In some cases particular indications were inspected from the ID; in most instances the presence of an indication was confirmed.

At this stage the vessel had been subjected to 12 hr of PWHT: 6 hr at 1150° and 6 hr at 1100°F. If the 1-1/2 hr heat treatment at 750°F is considered, the total time would be 13-1/2 hr.

In late November, in order to expedite testing of the prolongation, Taylor Forge was requested to apply a PWHT to the shell prolongation equivalent to that applied to the weld test specimens, and ship the prolongation to ORNL for testing. Accordingly, on December 6, 1972 they subjected the prolongation to a 15-hr PWHT at 1150°F. Thus the prolongation for this vessel has been subjected to either 27 or 28-1/2 hr of PWHT, depending on whether the 1-1/2 hr treatment at 750°F is considered.

1-3-73 Began repair of all three circumferential seams (details are not available).

Note: A technician reported that he witnessed the grinding in these areas and that he could see the defects as they were being removed. He informed that the defects appeared to be small stringer-like slag inclusions. They were very

tight, usually 1/2 to 3/4 in. long and 1/8 to 3/4 in. in height. In each case, porosity was observed immediately prior to grinding into a stringer.

1-5-73 Applied PWHT of 1150°F for 11 hr. The total PWHT time applied to the vessel would be 23 or 24-1/2 hr, depending, again, on whether the 1-1/2 hr treatment at 750°F is considered.

As noted in Section 3.5, Taylor Forge reported that vessel V-6 still contained some rejectable indications found by ultrasonic inspection. They reported that seam G-2 was acceptable, but that seams G-1 and G-3 each contained two spot-type indications located very near the ID surface. Again it was agreed that if final inspection showed these seams to be as good as described above they would be accepted as is.

The following conditions were found:

The longitudinal seams and seam G-3 were acceptable.

Seam G-1: Scanning from the shell side, 6-1/2 in. from 6 toward 5, an indication near the ID produced a signal 150% of DAC and extended for a distance of 3/4 in. circumferentially. This indication did not quite reach 100% of the DAC curve by scanning from the opposite side. This area was checked with dye penetrant and "bled" through in several tiny spots, indicating a slightly porous condition. However, with only slight grinding the indications were removed.

Seam G-2: Scanning toward the hemi head, 5 in. from 4 toward 5, an indication about 1/2 in. long was found near the ID that produced a signal 200% of DAC. Scanning from

the opposite side (scanning toward top of vessel), the signal was only about 25% of DAC. The signal from this indication was compared with the signal from a 1/4 in. notch (later cut in the reference block), and the magnitude of both signals was about equal.

At 1 in. from 4 toward 3, scanning toward the hemi head, an indication 1/2 in. long was found near the ID that produced a signal 150% of DAC. Essentially the same conditions were detectable by scanning from the hemi head side of the shell. The vessel was accepted.

Proof-testing of these vessels is now in progress, and the results of such testing will be available in subsequent reports.

REFERENCES

1. J. A. Hayward and R. L. Cloud, Heavy-Section Steel Technology Program Semiannual Progress Report, February 28, 1970, USAEC Report ORNL-4590, pp. 143-158, Oak Ridge National Laboratory.

2. D. A. Canonico, Heavy-Section Steel Technology Program Semiannual Progress Report, February 28, 1971, USAEC Report ORNL-4681, pp. 94-98, Oak Ridge National Laboratory.

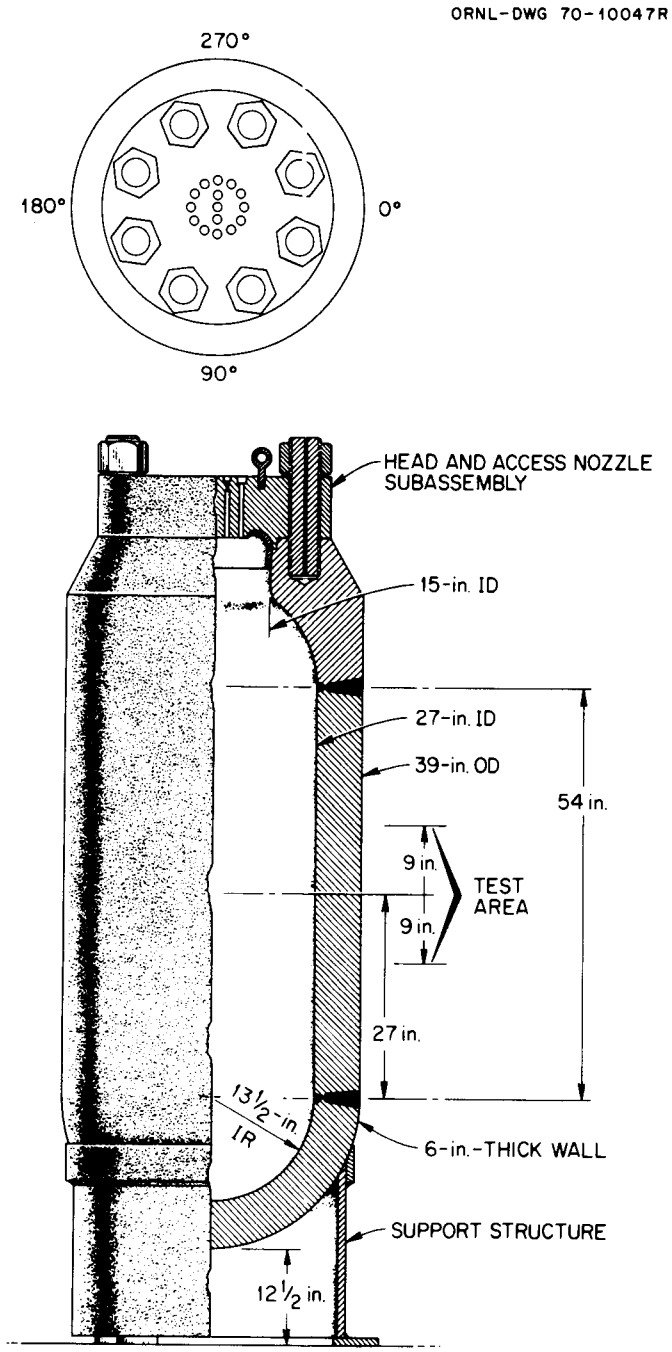

Fig. 1. HSST Intermediate Test Vessel

ORNL—DWG 70—10062

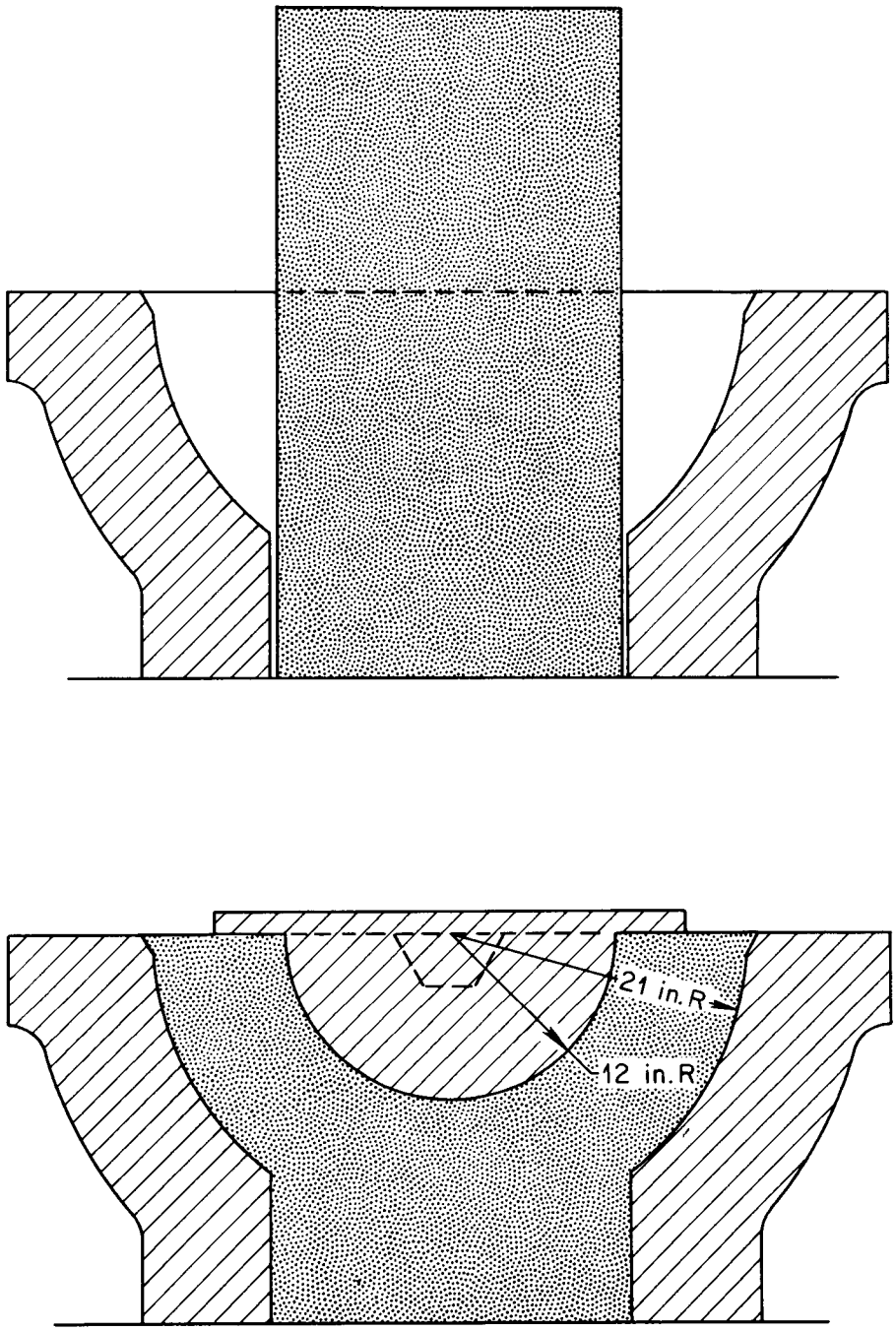

Fig. 2. Die Used for Rough Forming of the Hemispherical Heads

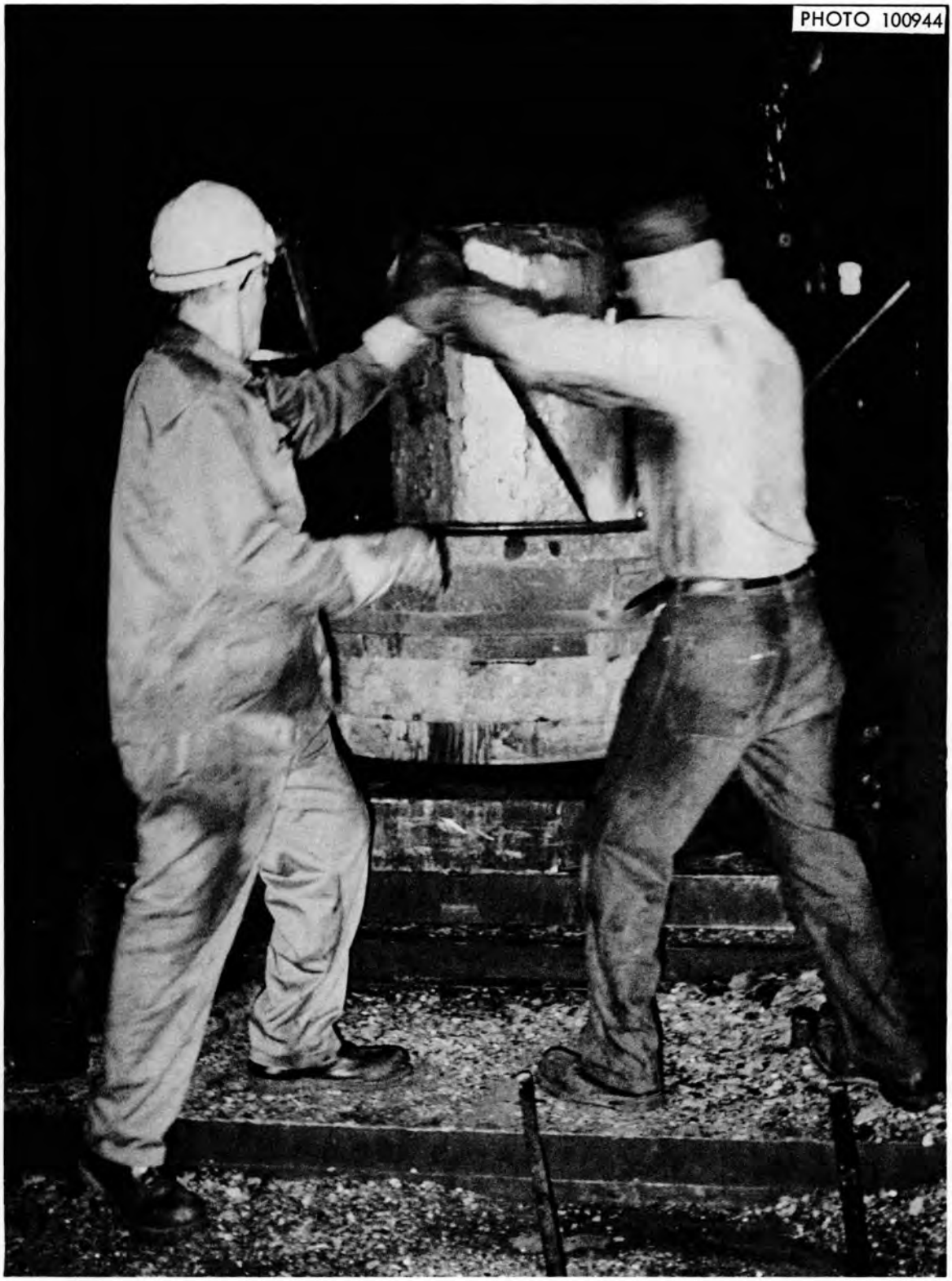

Fig. 3. Hand-Centering of Bar in the Die

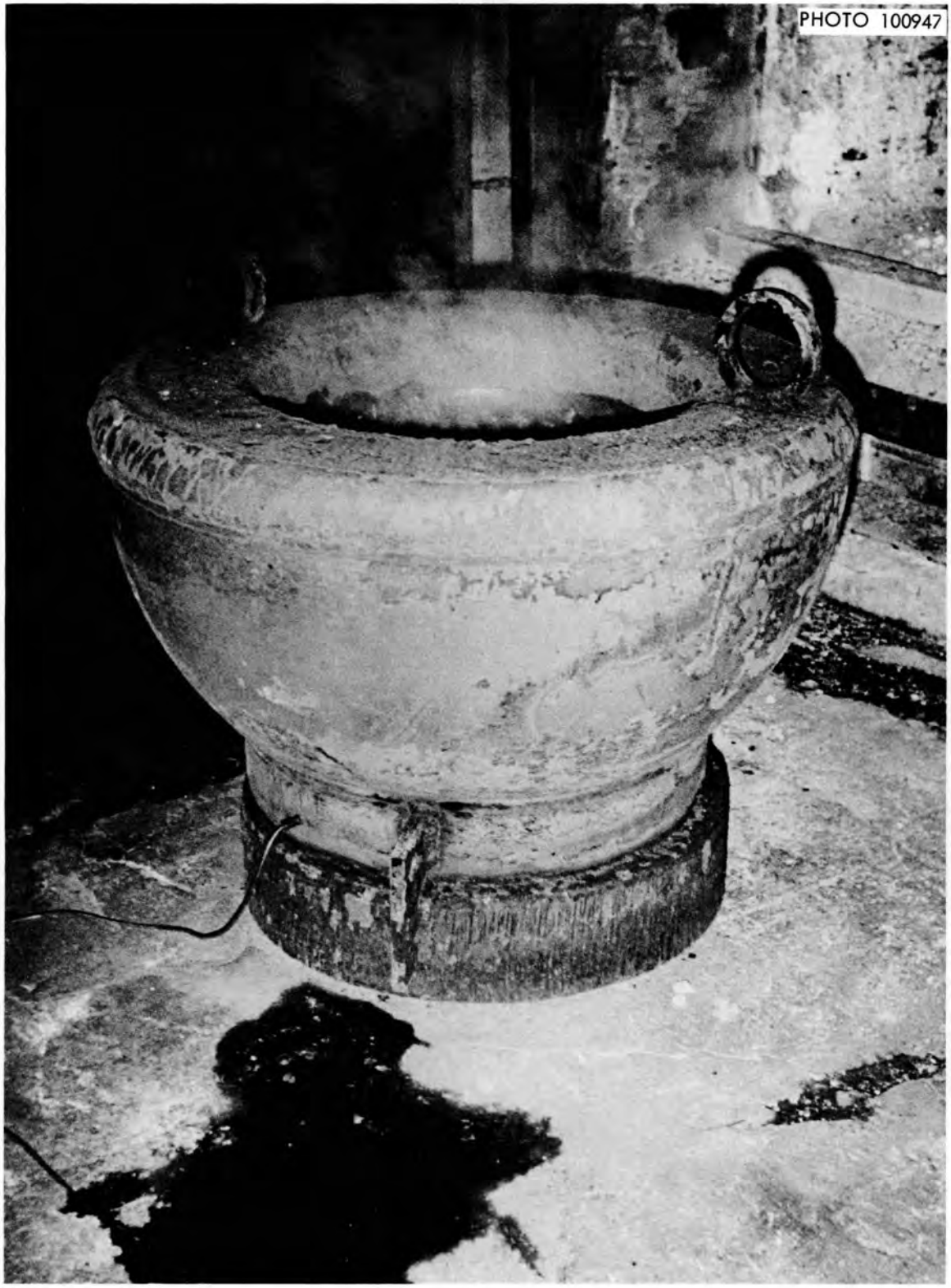

Fig. 4. As-Quenched Hemispherical Head

Fig. 5. Beginning of Machining of Hemispherical Head

ORNL-DWG 70-10052

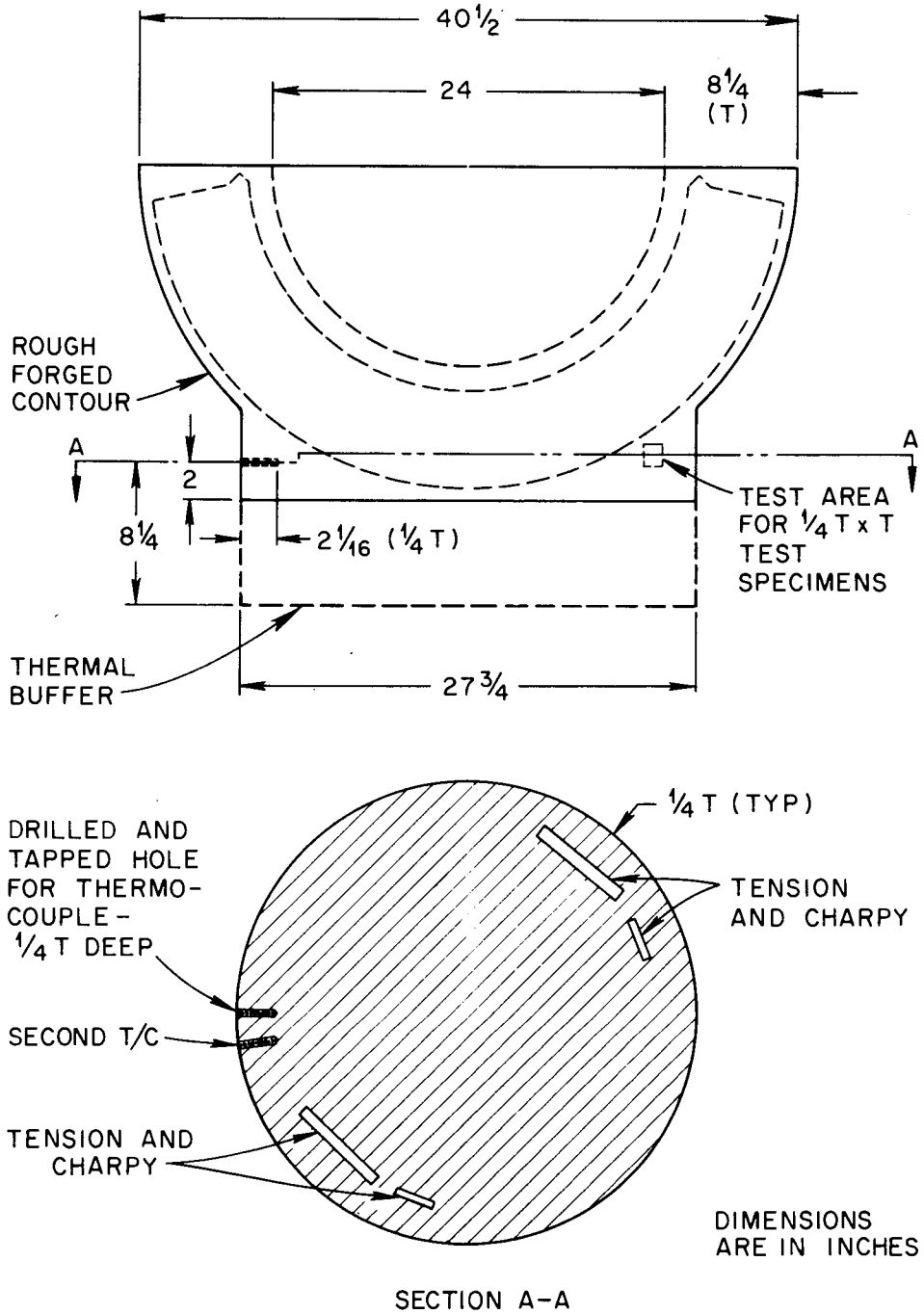

Fig. 6. Location of Test Material and Thermocouples in Hemispherical Head

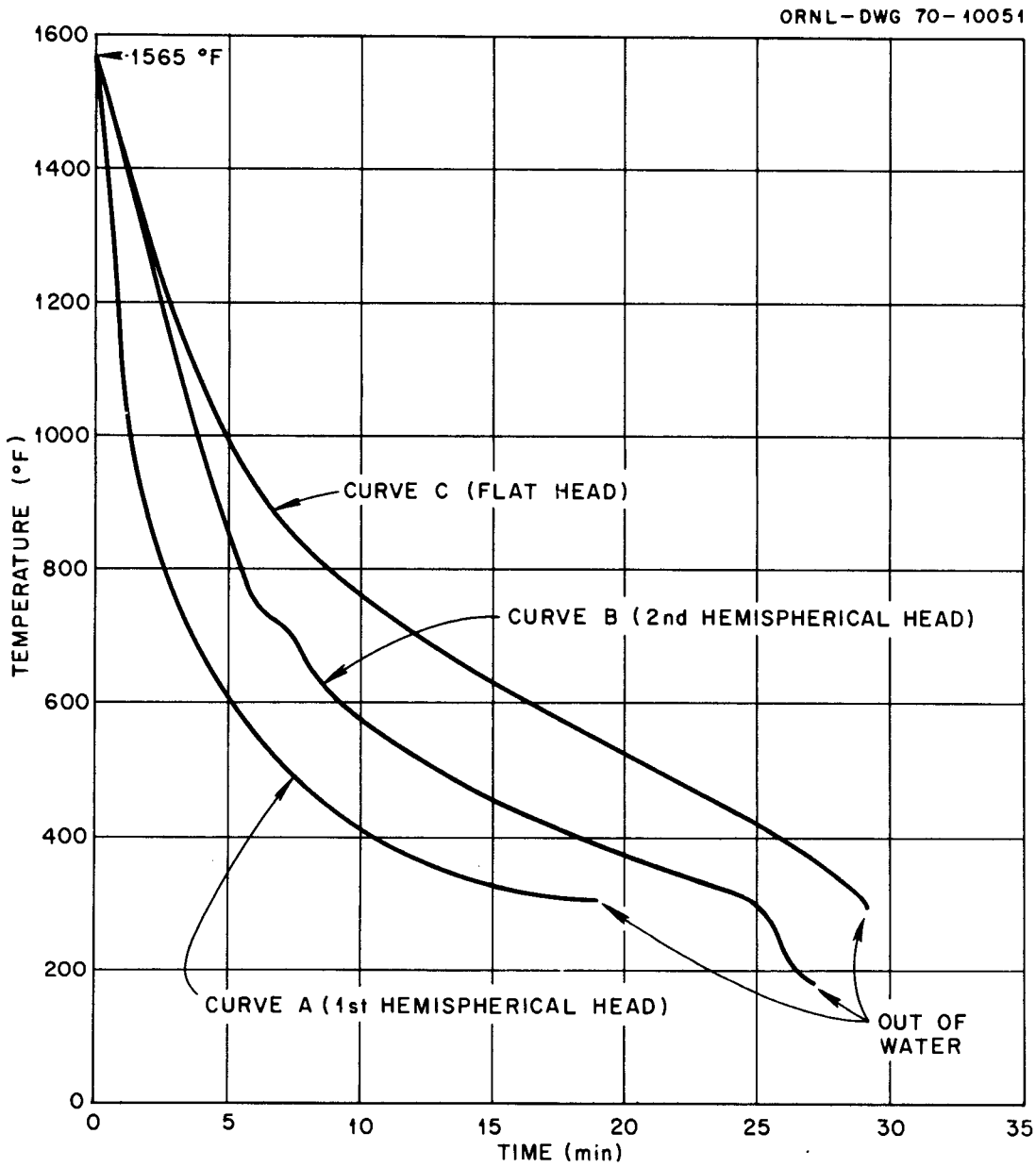

Fig. 7. Cooling Rates for Flat and Hemispherical Heads.

ORNL-DWG 70-10050

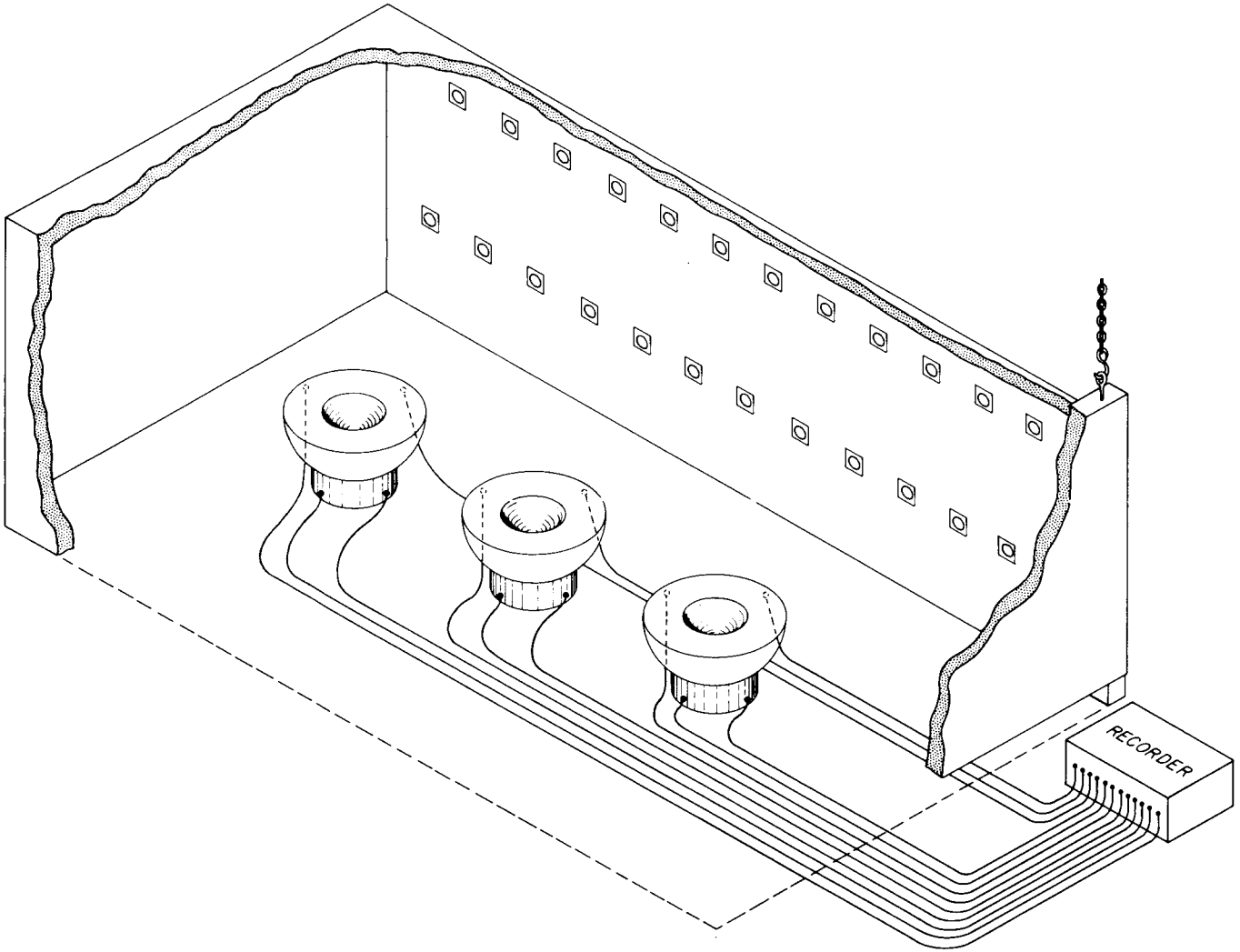

Fig. 8. Arrangement of Hemispherical Heads in the Furnace for Tempering

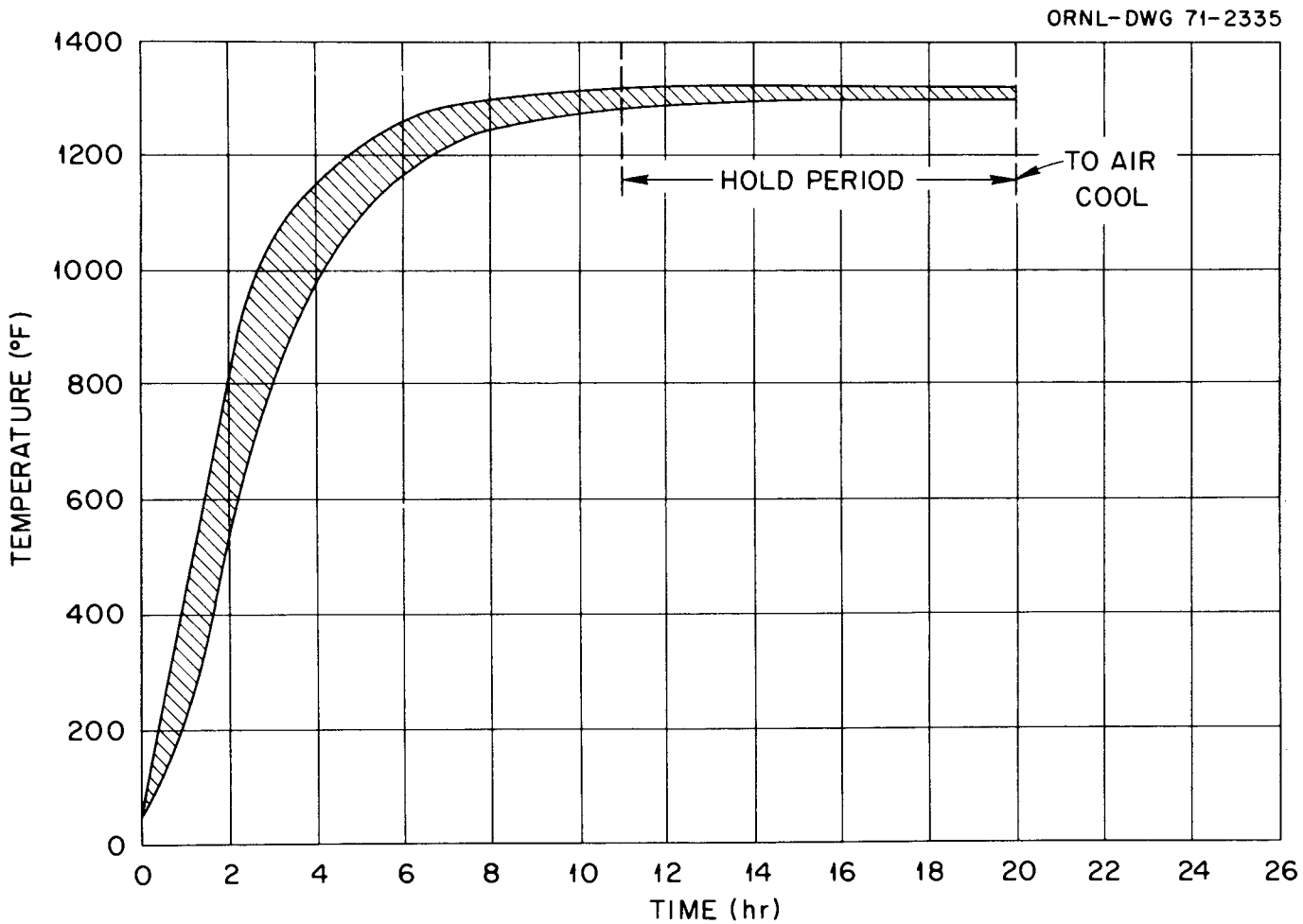

Fig. 9. Spread in Thermocouple Readings During Tempering of Hemispherical Heads 1, 5 & 6

ORNL-DWG 70-10049

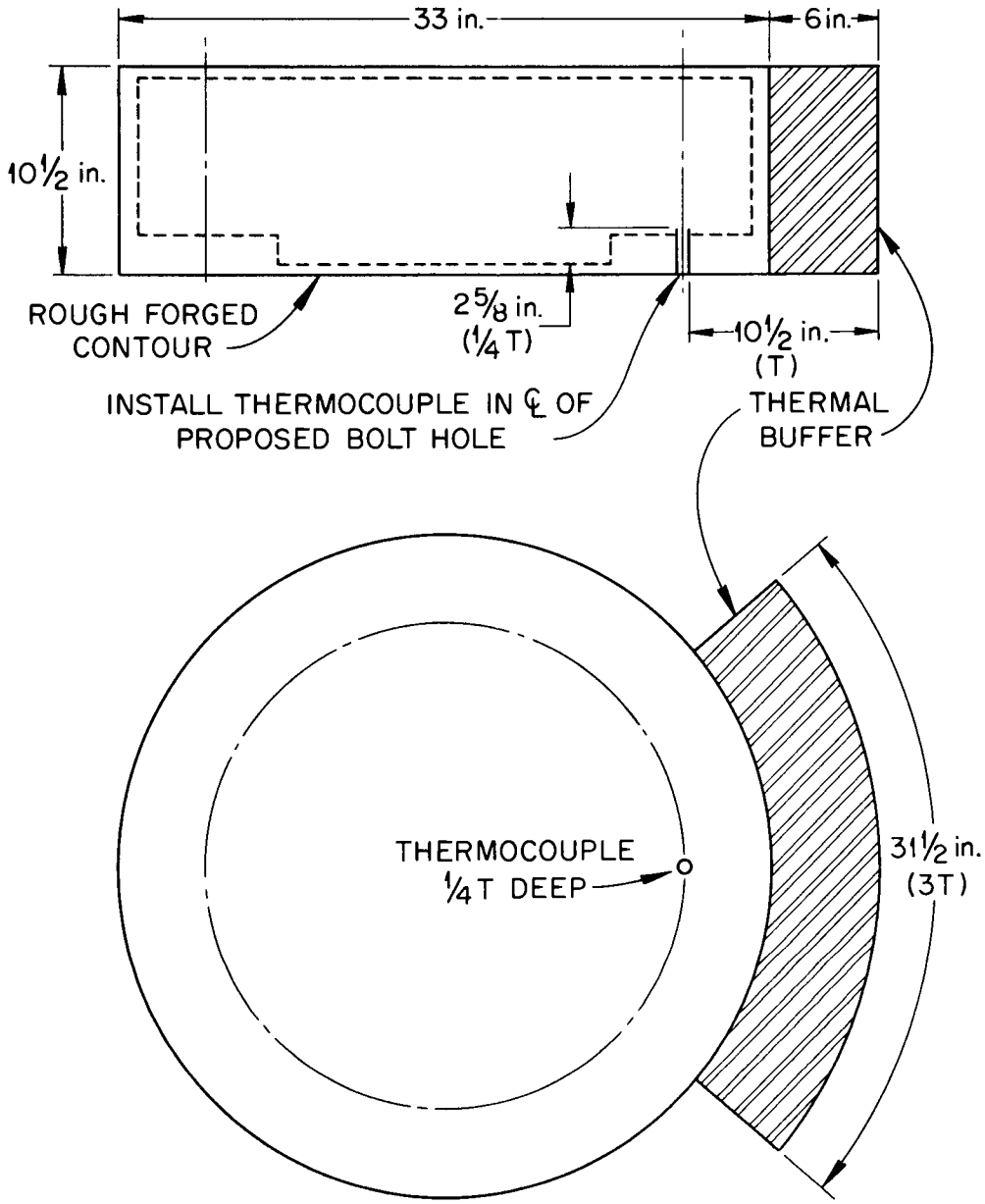

Fig. 10. Location of Thermocouple in Rough Forged Flat Head

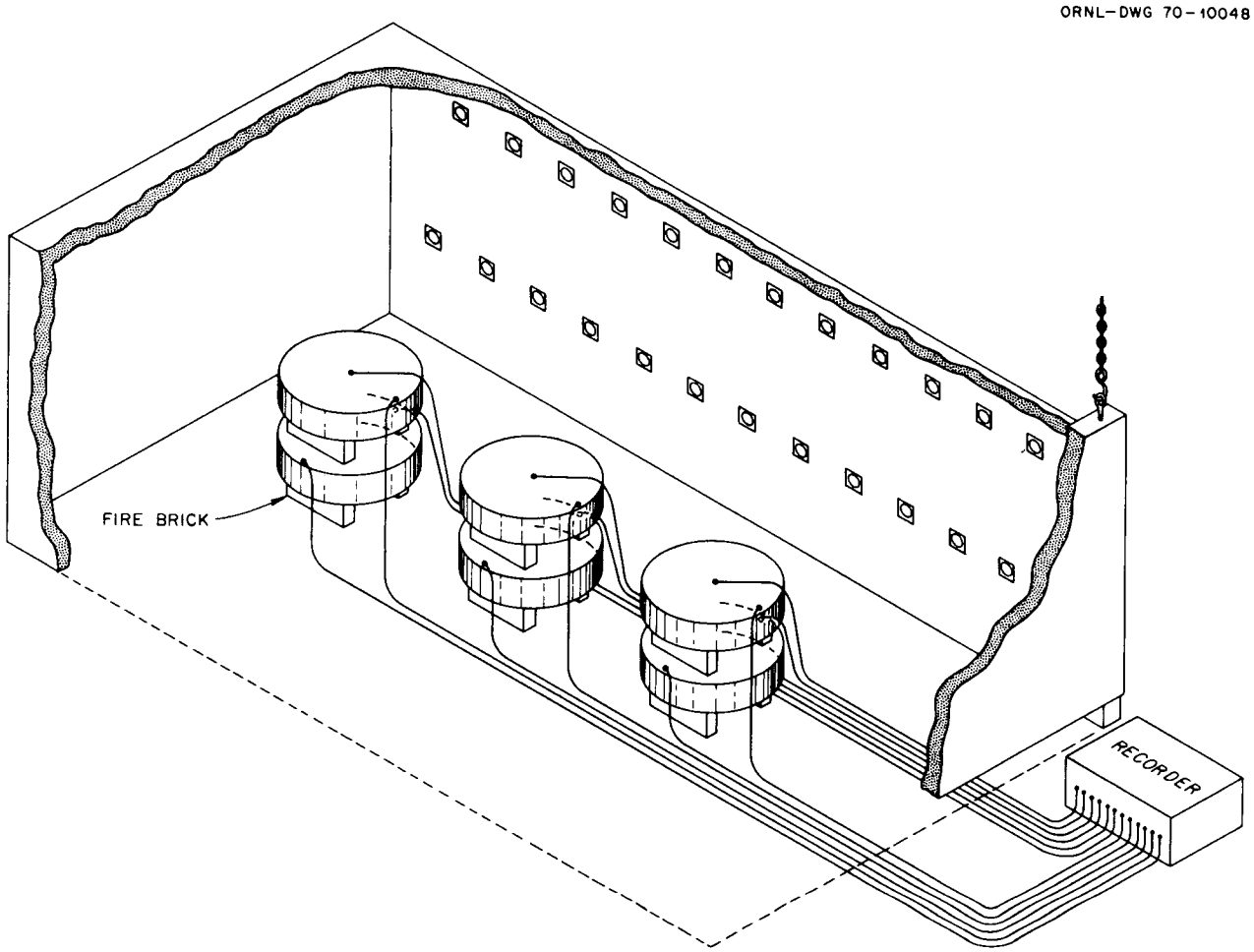

Fig. 11. Arrangement of Flat Heads in the Furnace for Tempering

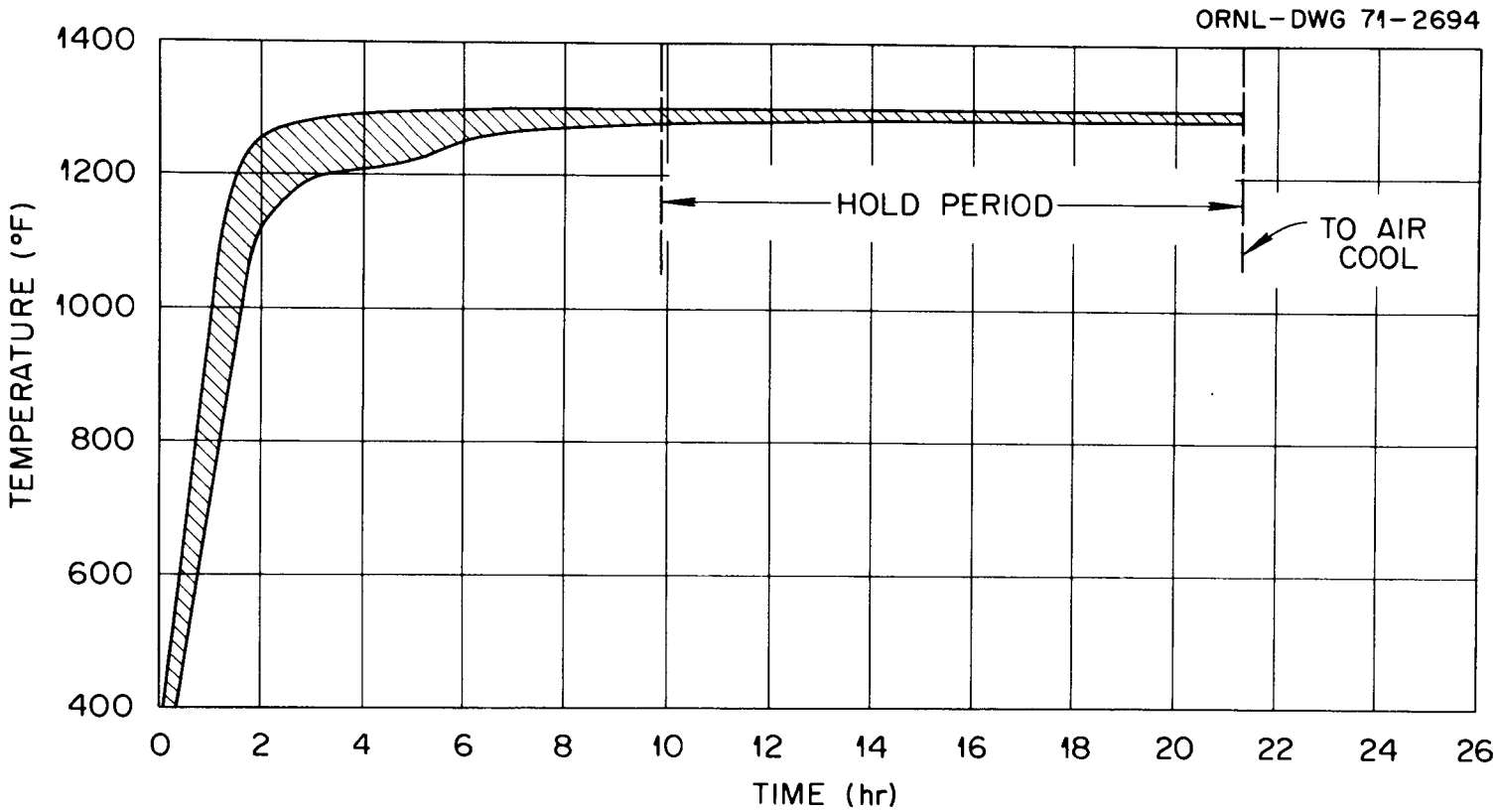

Fig. 12. Spread in Thermocouple Readings During Tempering of the 6 Flat Heads

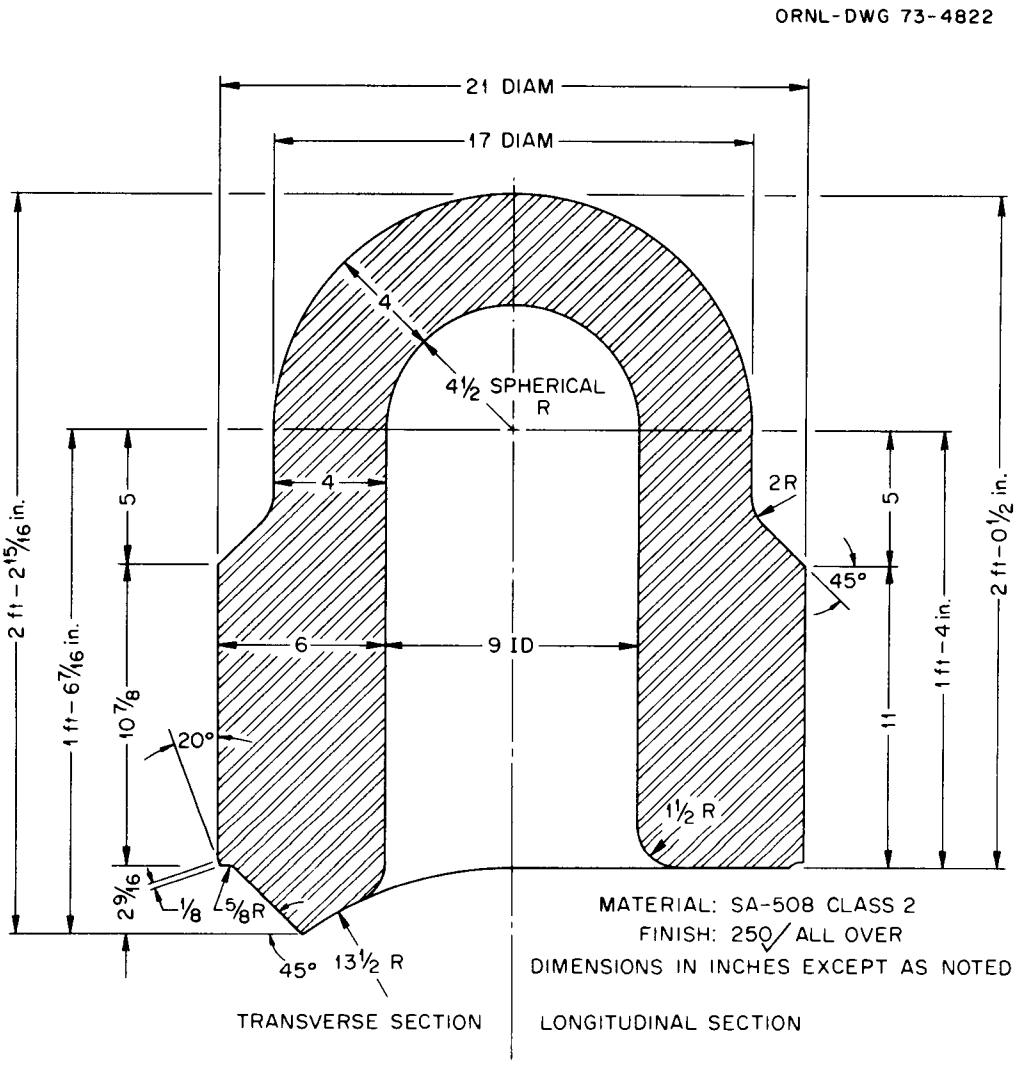

Fig. 13. Nine-inch ID Nozzle for Vessel V-5

ORNL-DWG 71-993

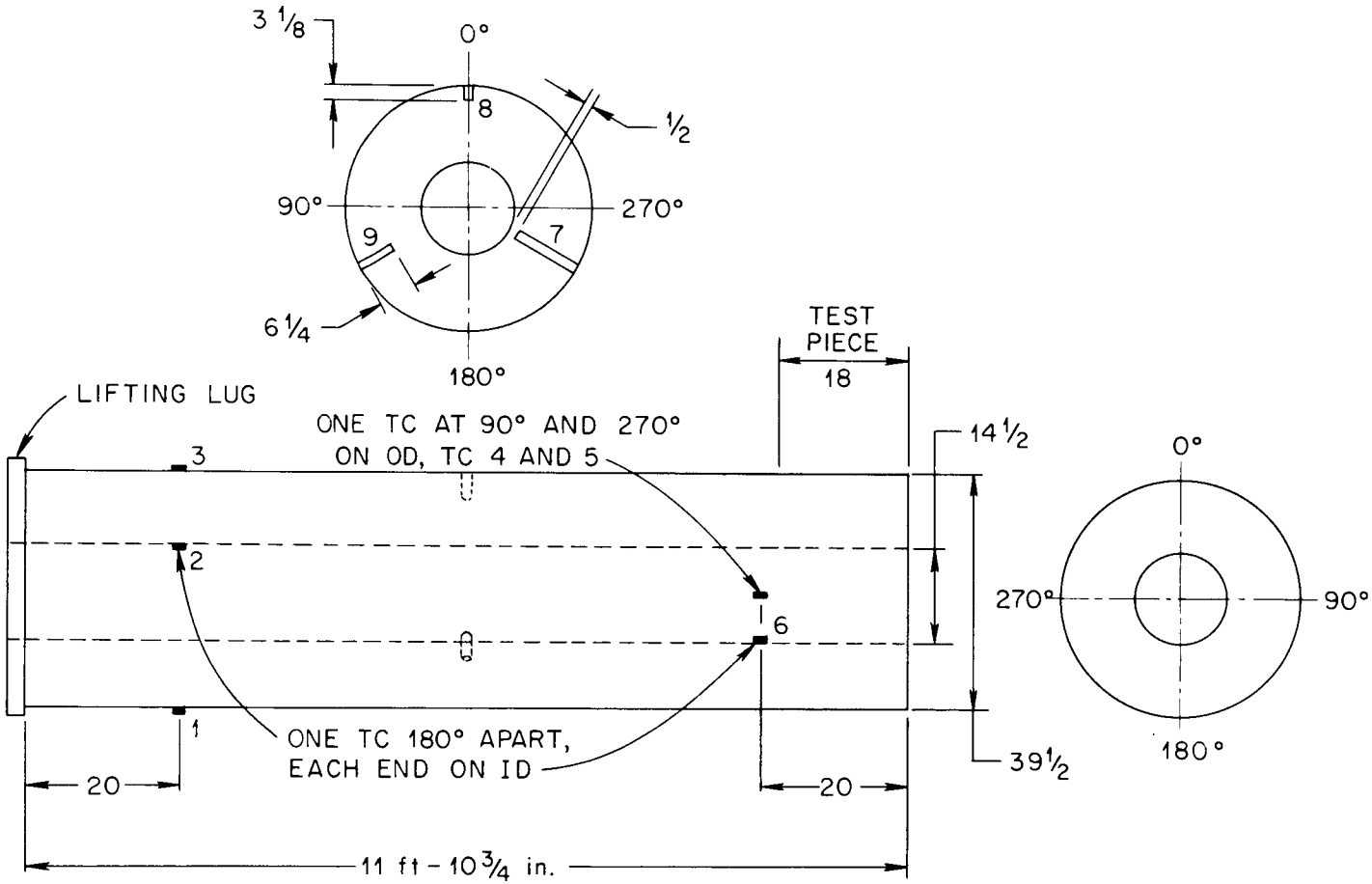

Fig. 14. Thermocouple Locations for 6-Piece Closure Flange Multiple

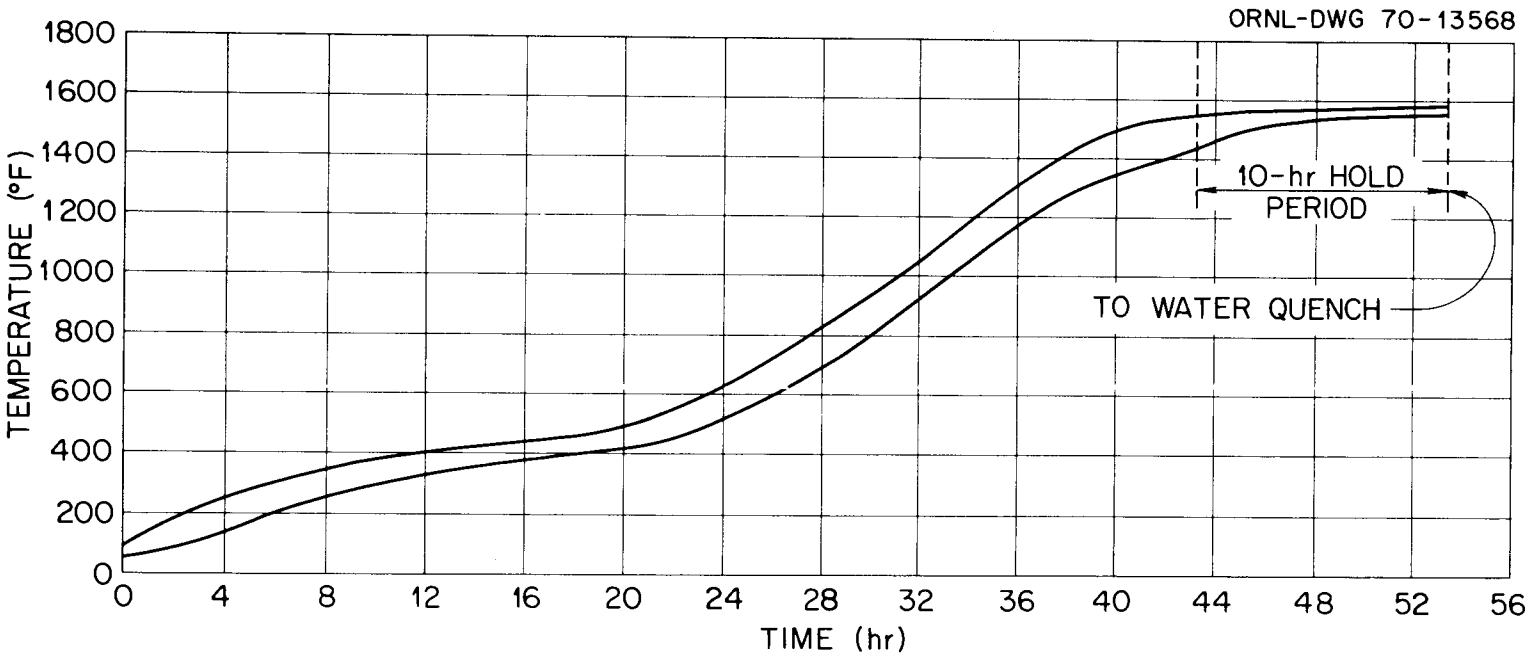

Fig. 15. Spread in Thermocouple Readings
During Austenitizing of 6-Piece Multiple Closure Flanges

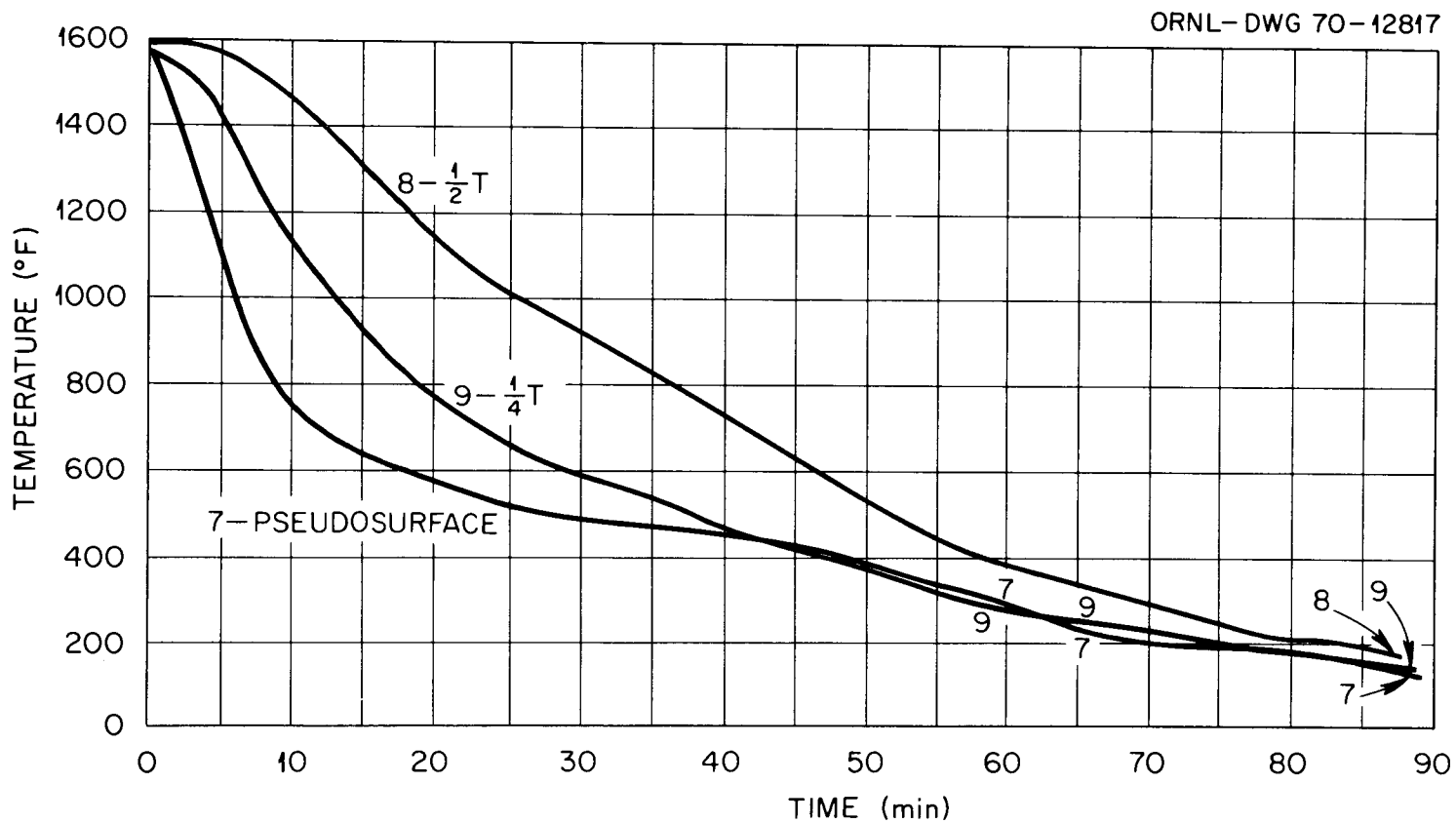

Fig. 16. Cooling Curves for the Imbedded Thermocouples in the Closure Flange Multiple

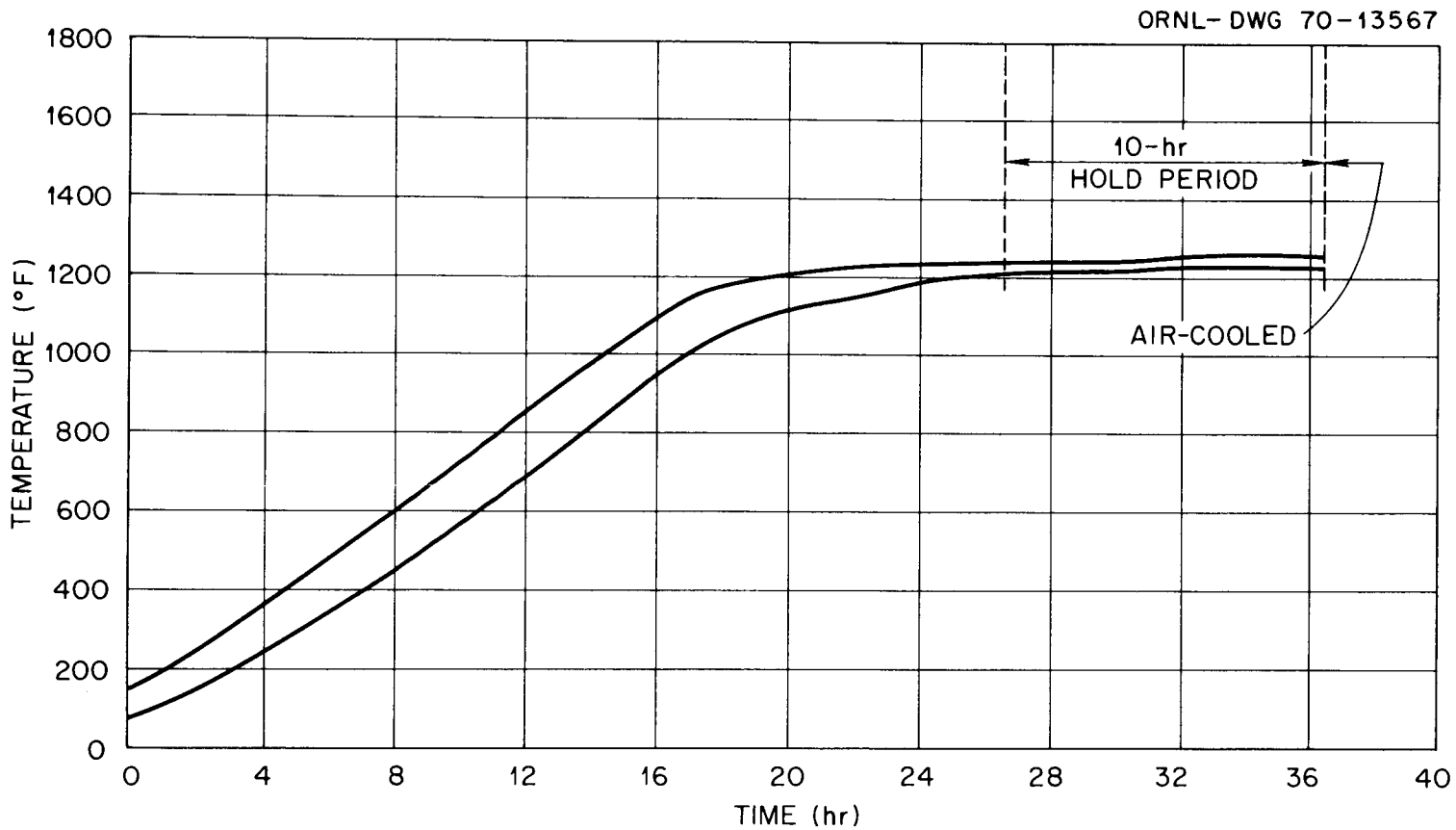

Fig. 17. Spread in Thermocouple Readings During Tempering of Closure Flange Multiple

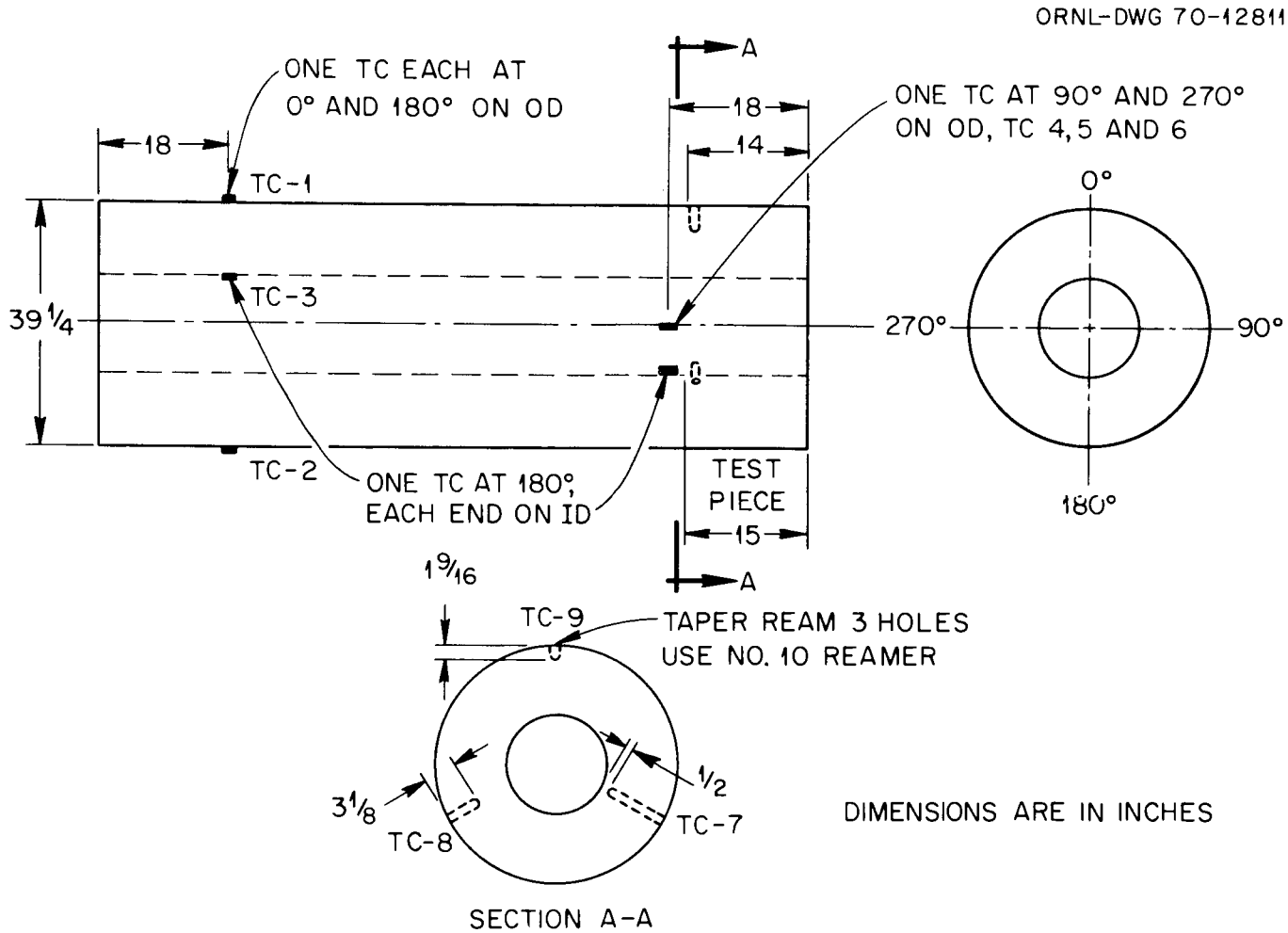

Fig. 18. Location of Thermocouples on Shell 6

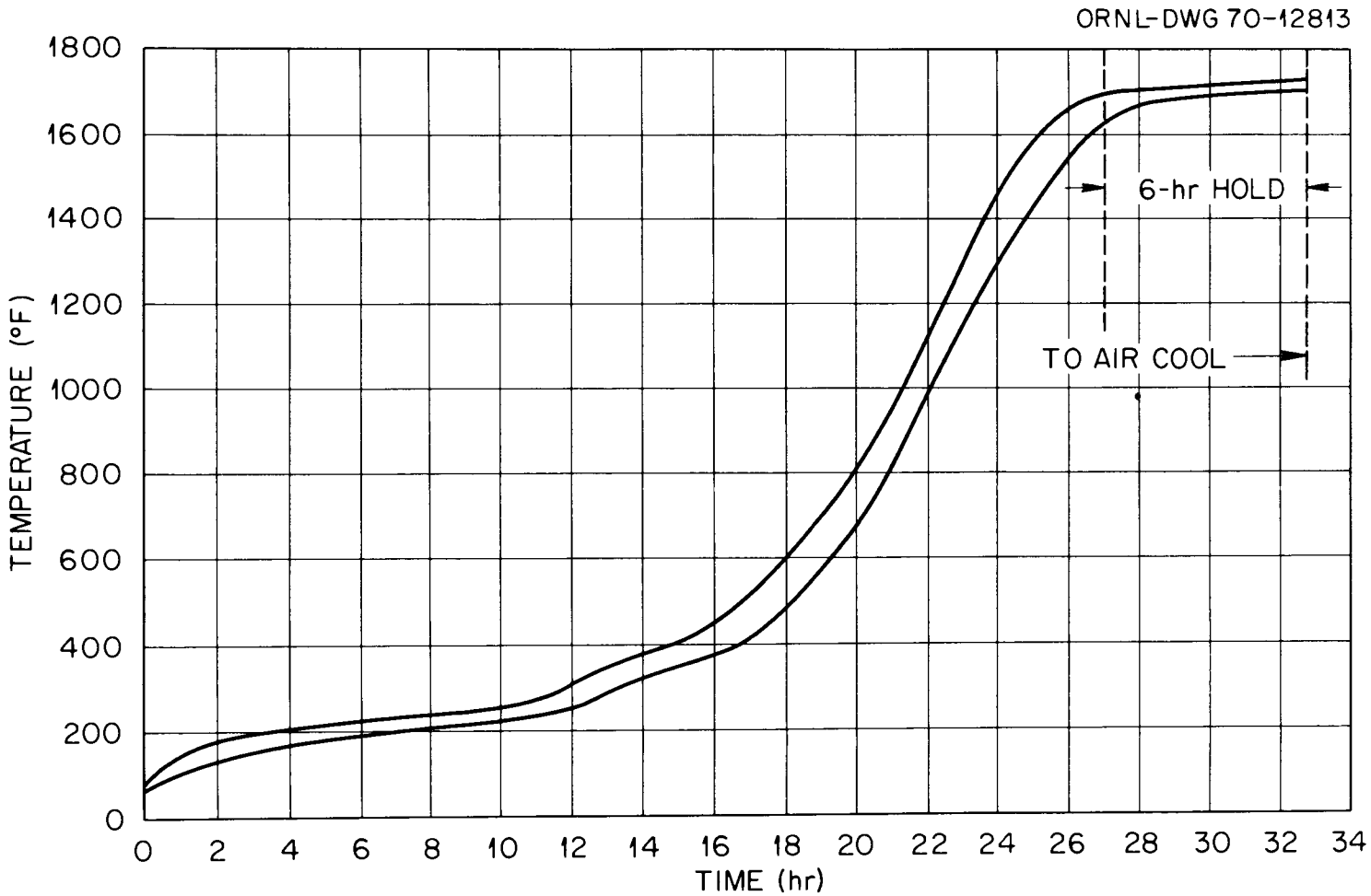

Fig. 19. Spread in Thermocouple Readings During Normalizing of Shell 6

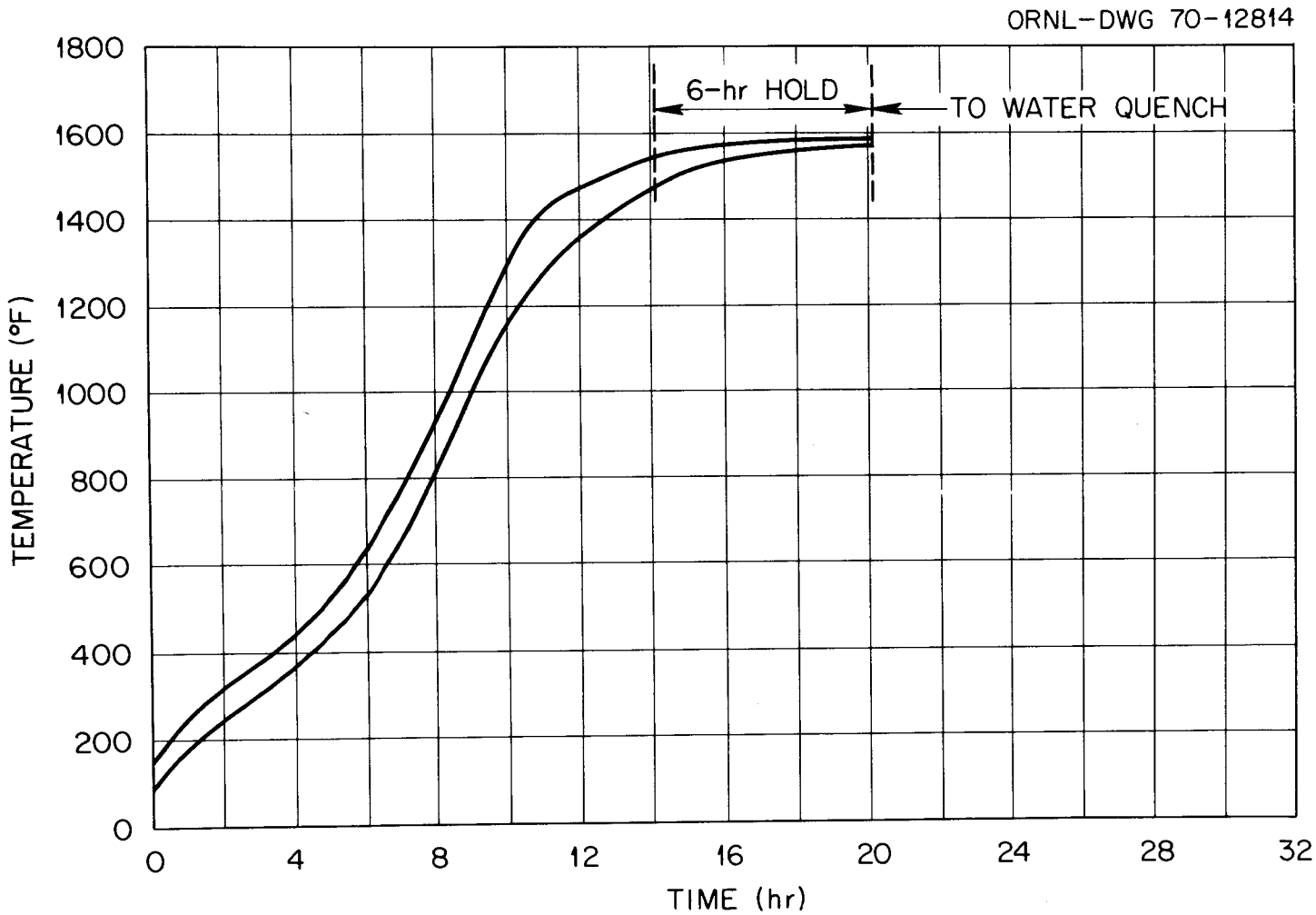

Fig. 20. Spread in Thermocouple Readings During Austenitizing of Shell 6

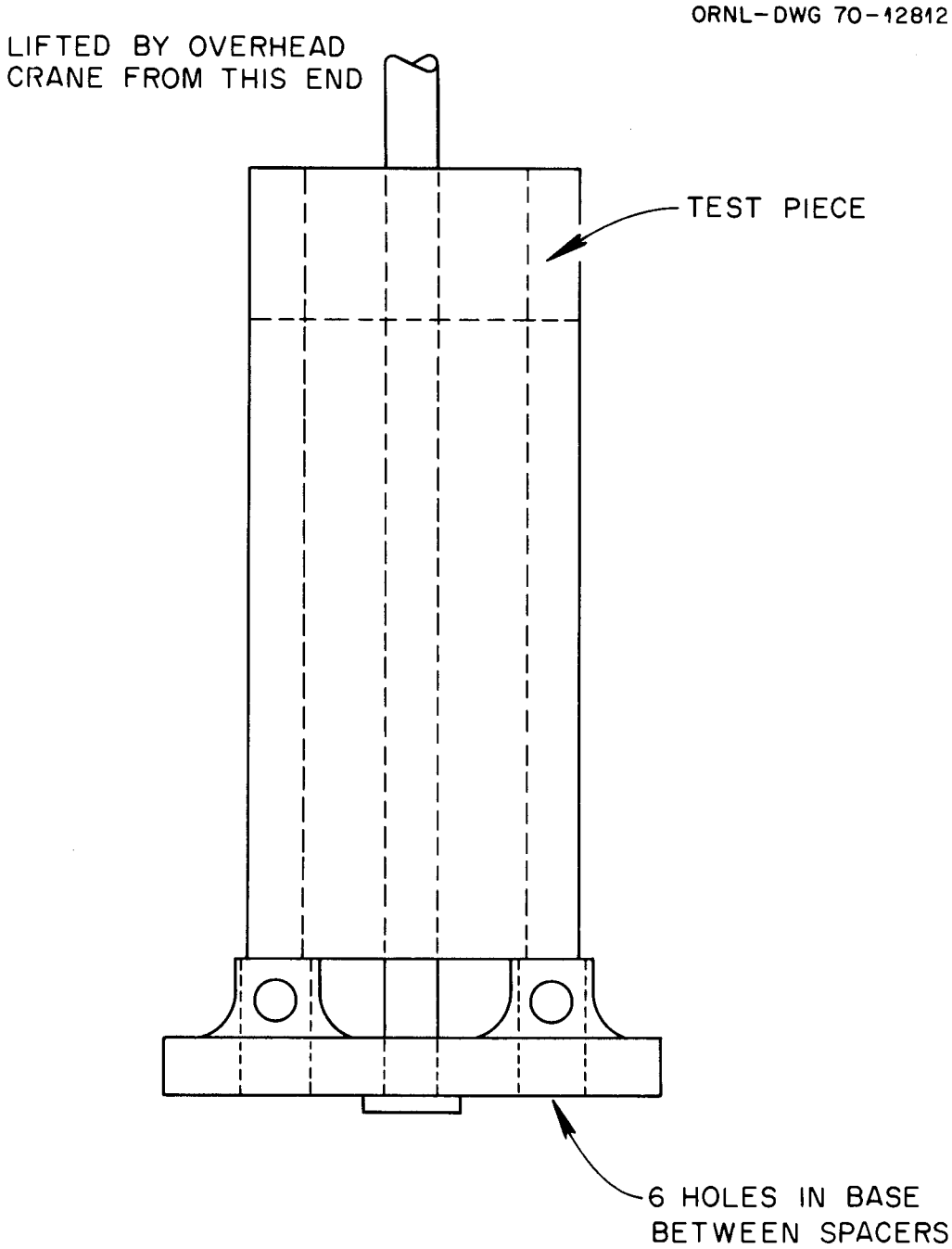

Fig. 21. Handling Arrangement for Quenching (Vertically)

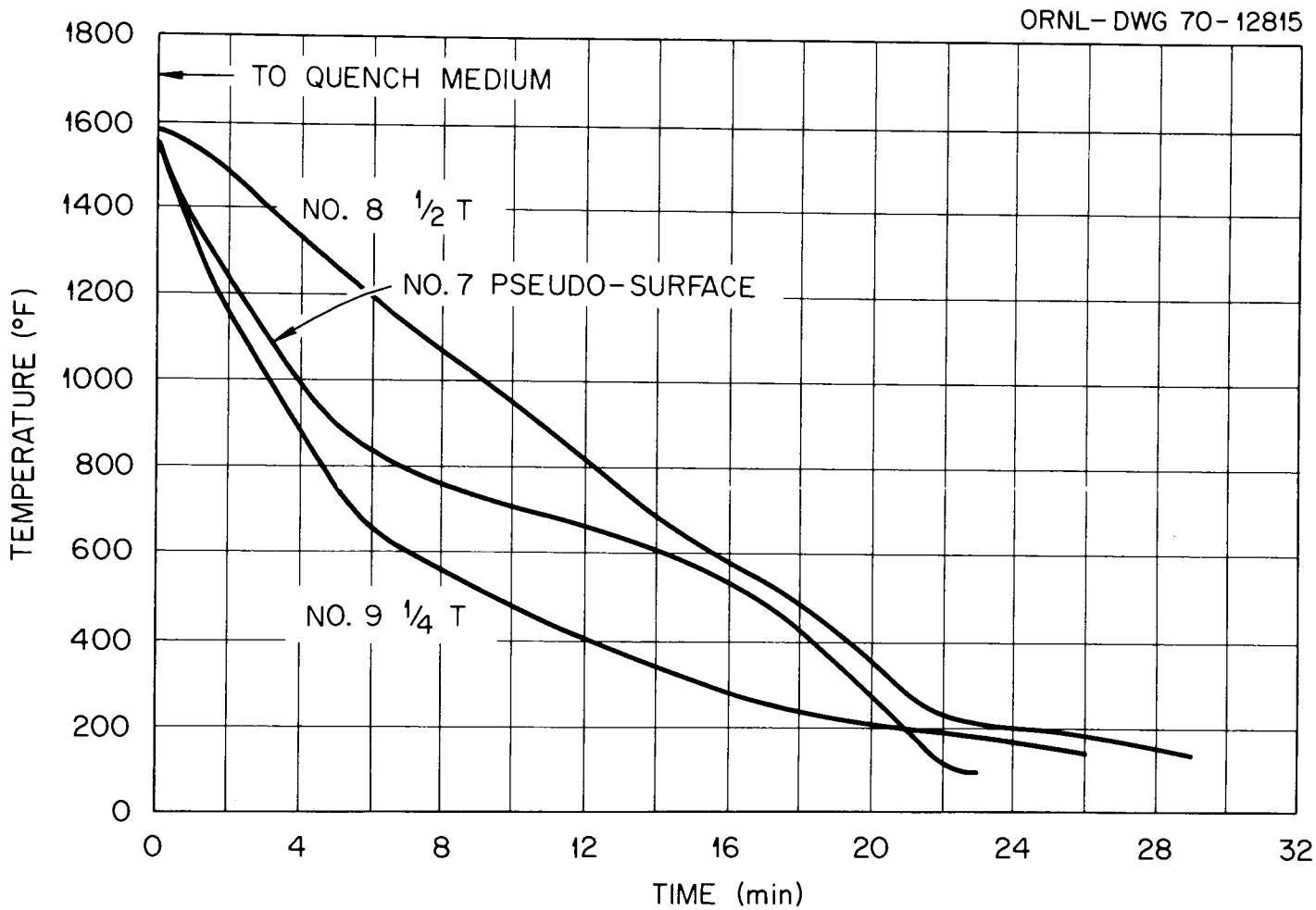

Fig. 22. Cooling Curves for the Imbedded Thermocouples in Shell 6

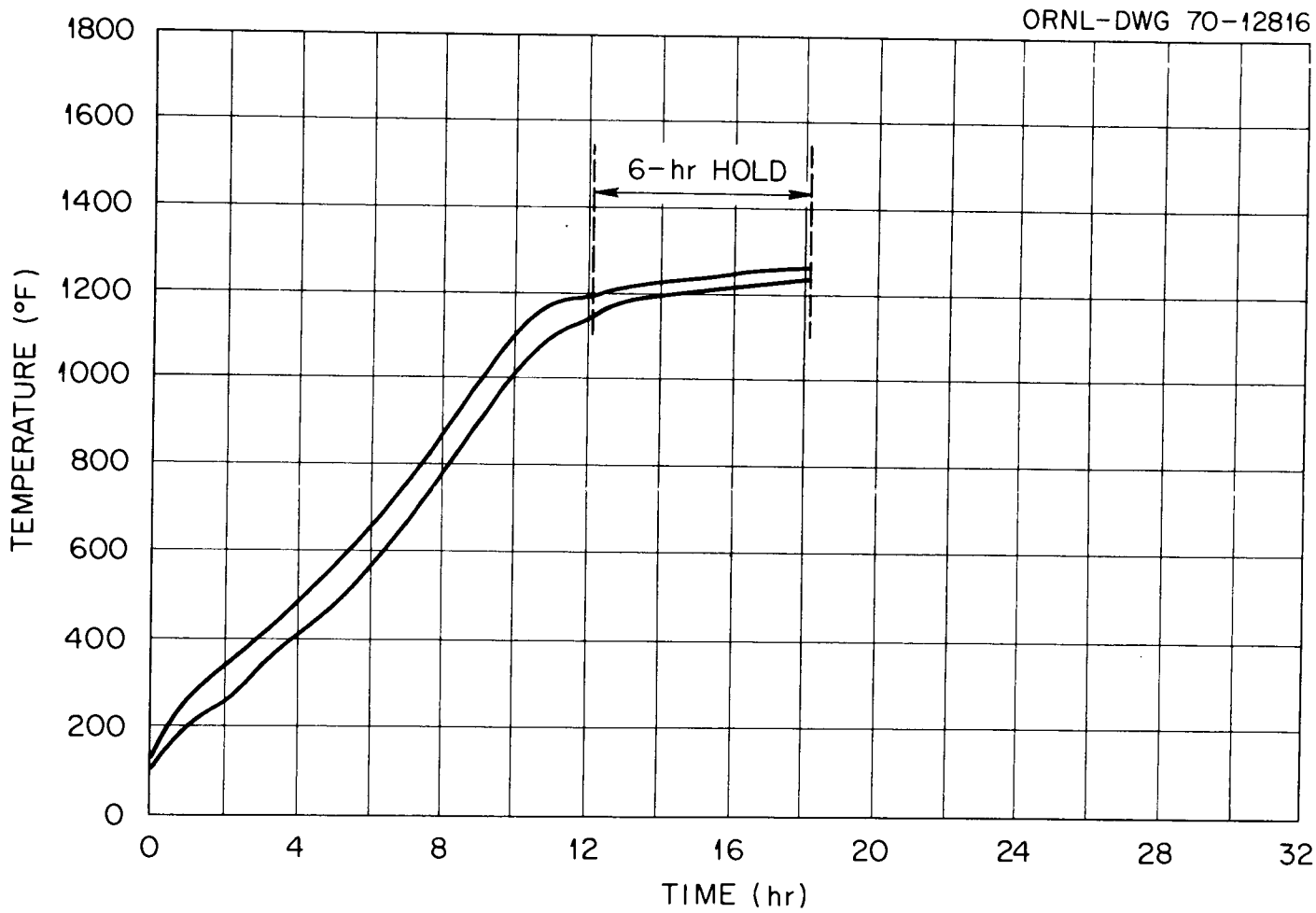

Fig. 23. Spread in Thermocouple Readings During Tempering of Shell 6

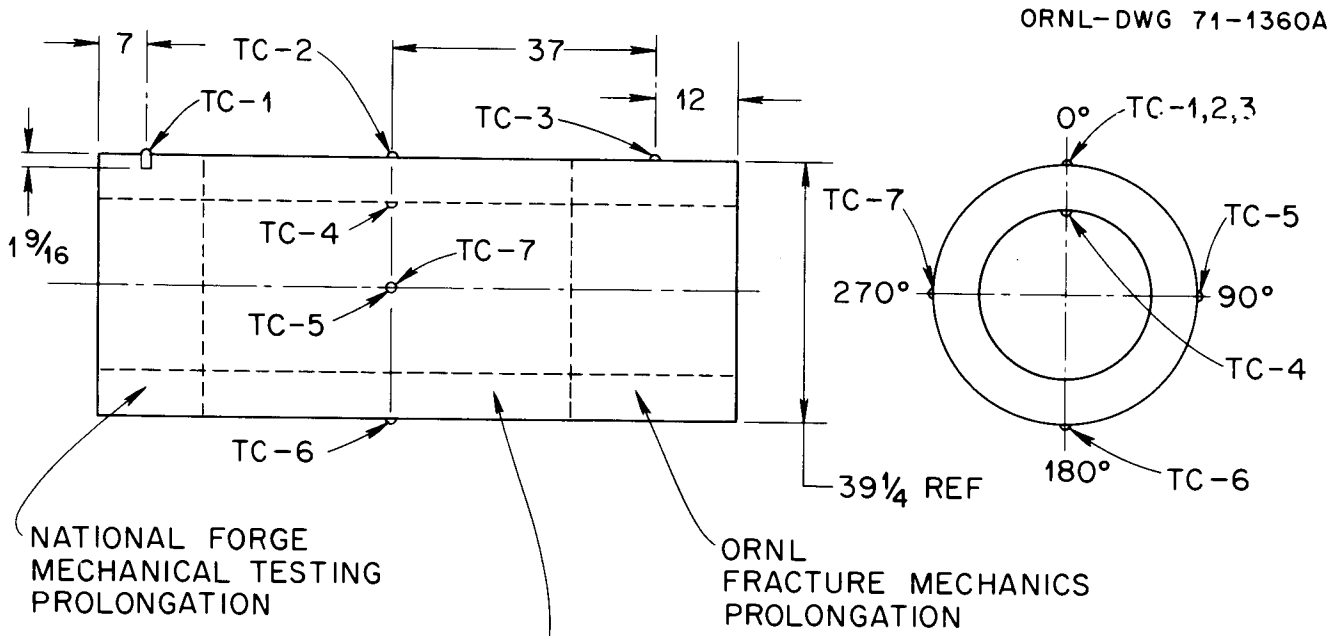

NOTES:

1 THERMOCOUPLE LAYOUT TYPICAL FOR ALL FORGINGS EXCEPT THE ONE FOR VESSEL V-5. (ORNL HAS RECEIVED THE FRACTURE MECHANICS PROLONGATION ON THIS FORGING; IT WAS NOT RETEMPERED)

2 THE LOCATION OF THERMOCOUPLES SHALL BE MAINTAINED BY MATCH MARKING AND TRANSFER OF IDENTIFICATION THROUGHOUT. ALL MANUFACTURING OPERATIONS SHALL BE DONE.

Fig. 24. Location of Thermocouples During Retemper of Shell 9

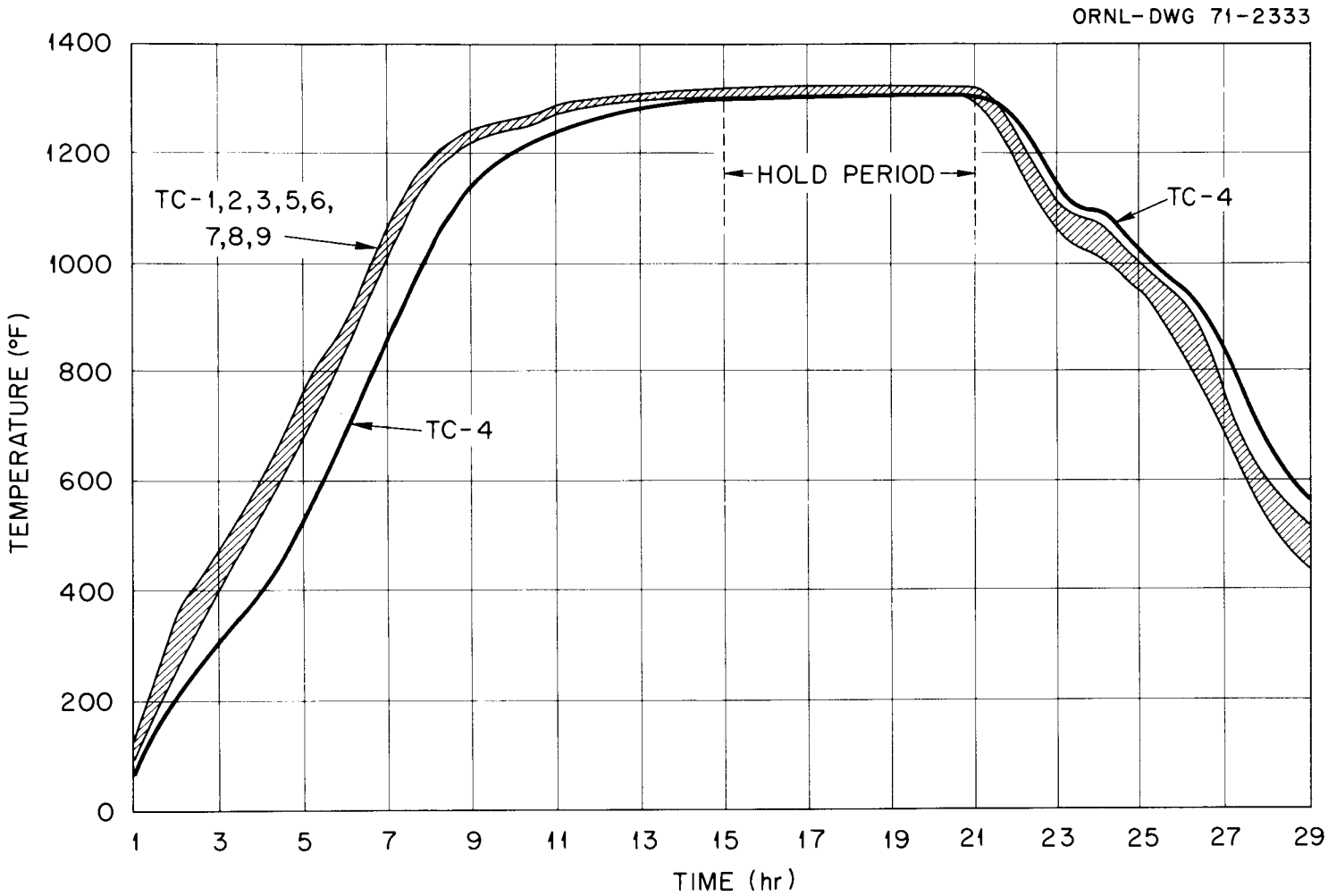

Fig. 25. Spread in Thermocouple Readings During Retempering of Shell 9

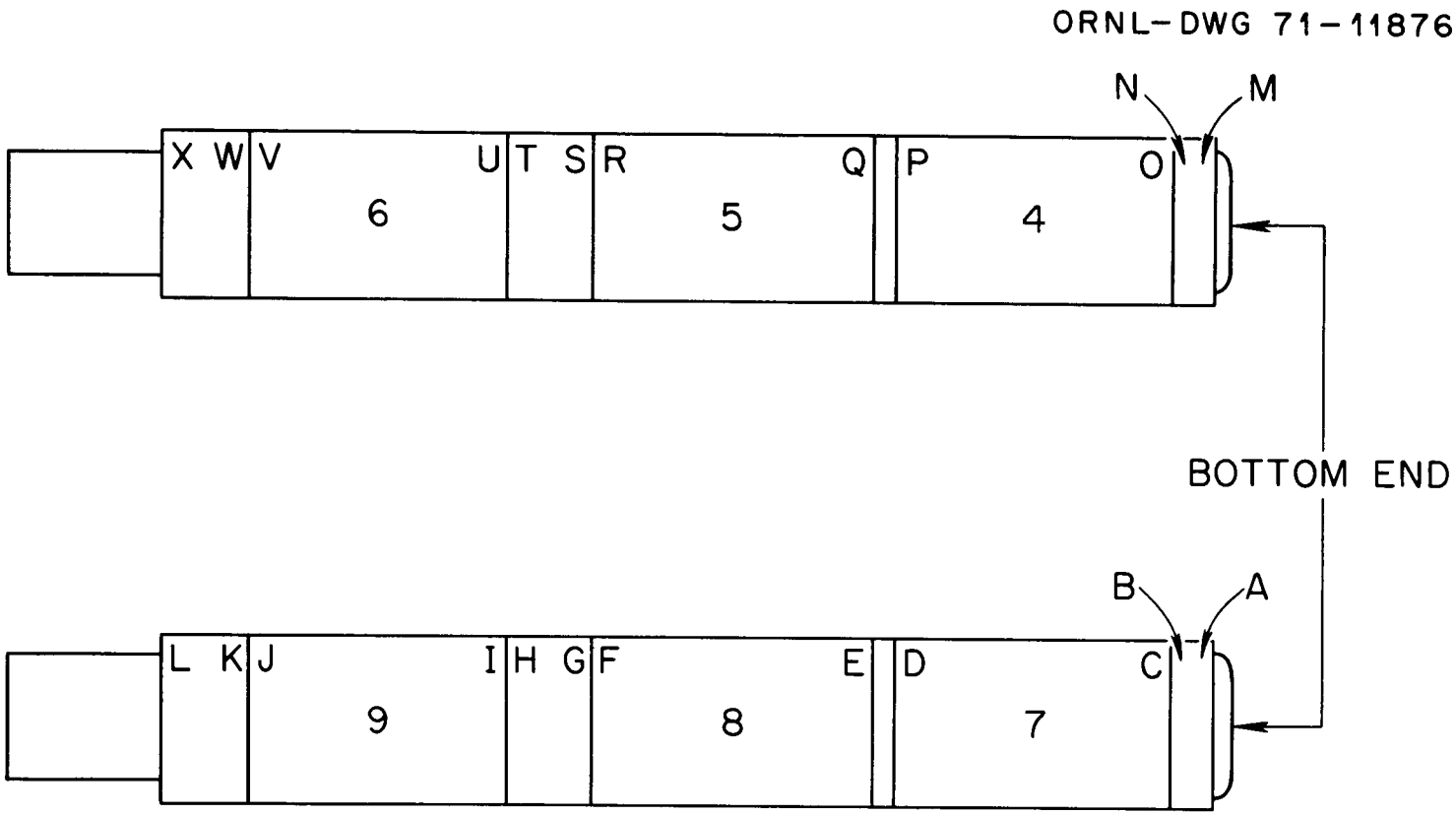

Fig. 26. Identification of Shell Courses by National Forge

ORNL-DWG 70-10047A

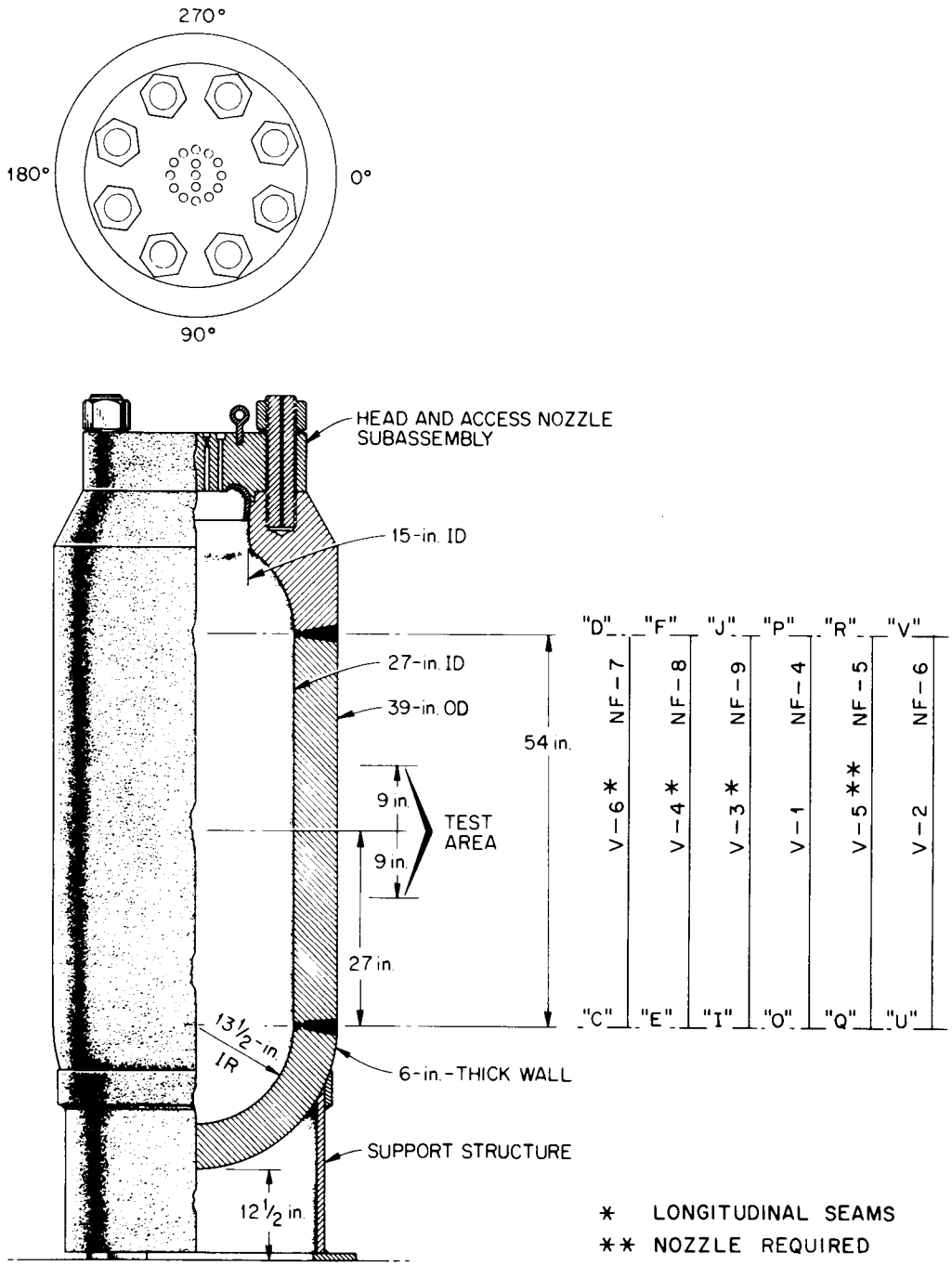

Fig. 27. Orientation of Shell Courses for Intermediate Test Vessels

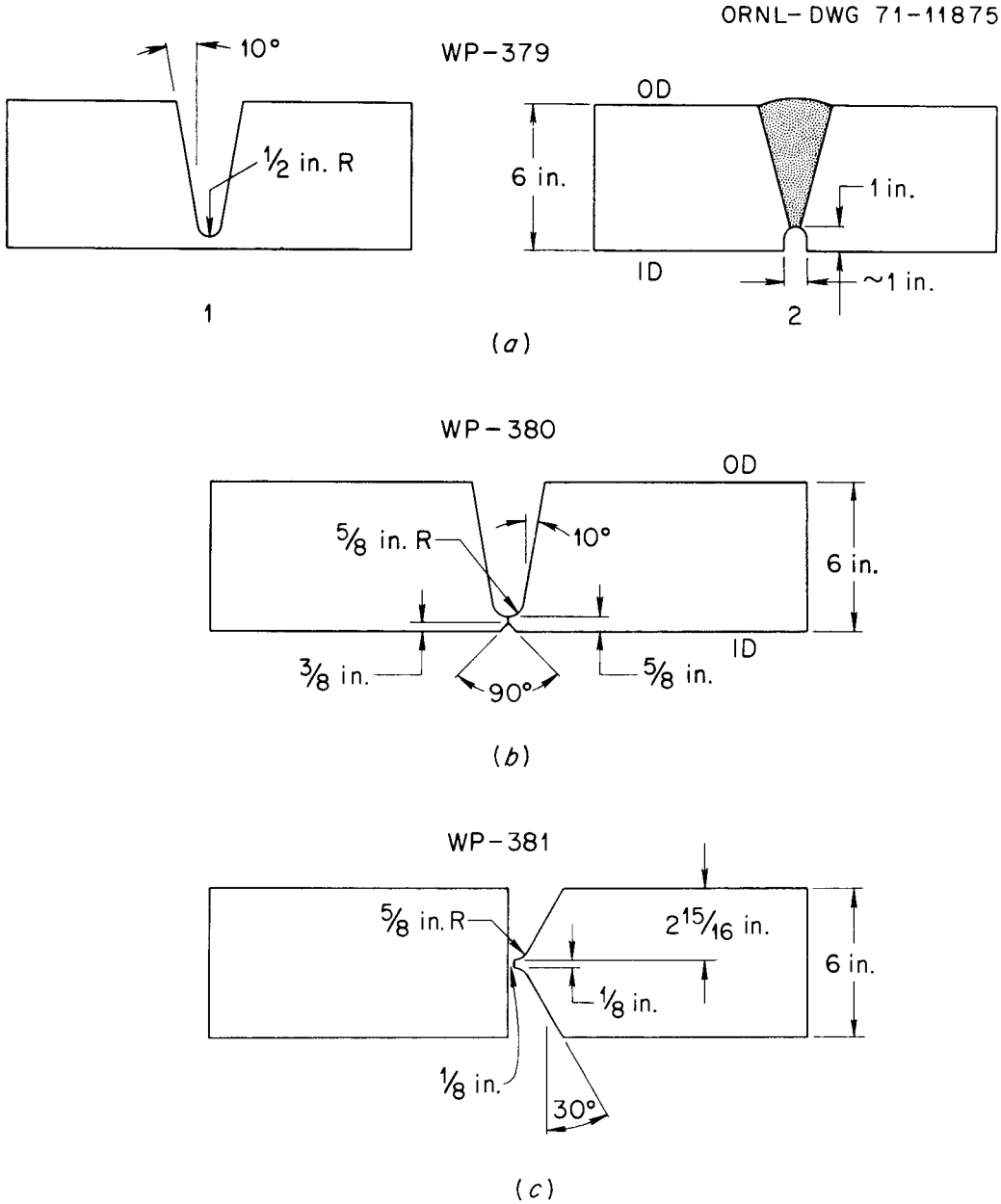

Fig. 28. Joint Preparations for Taylor Forge Welding Procedures

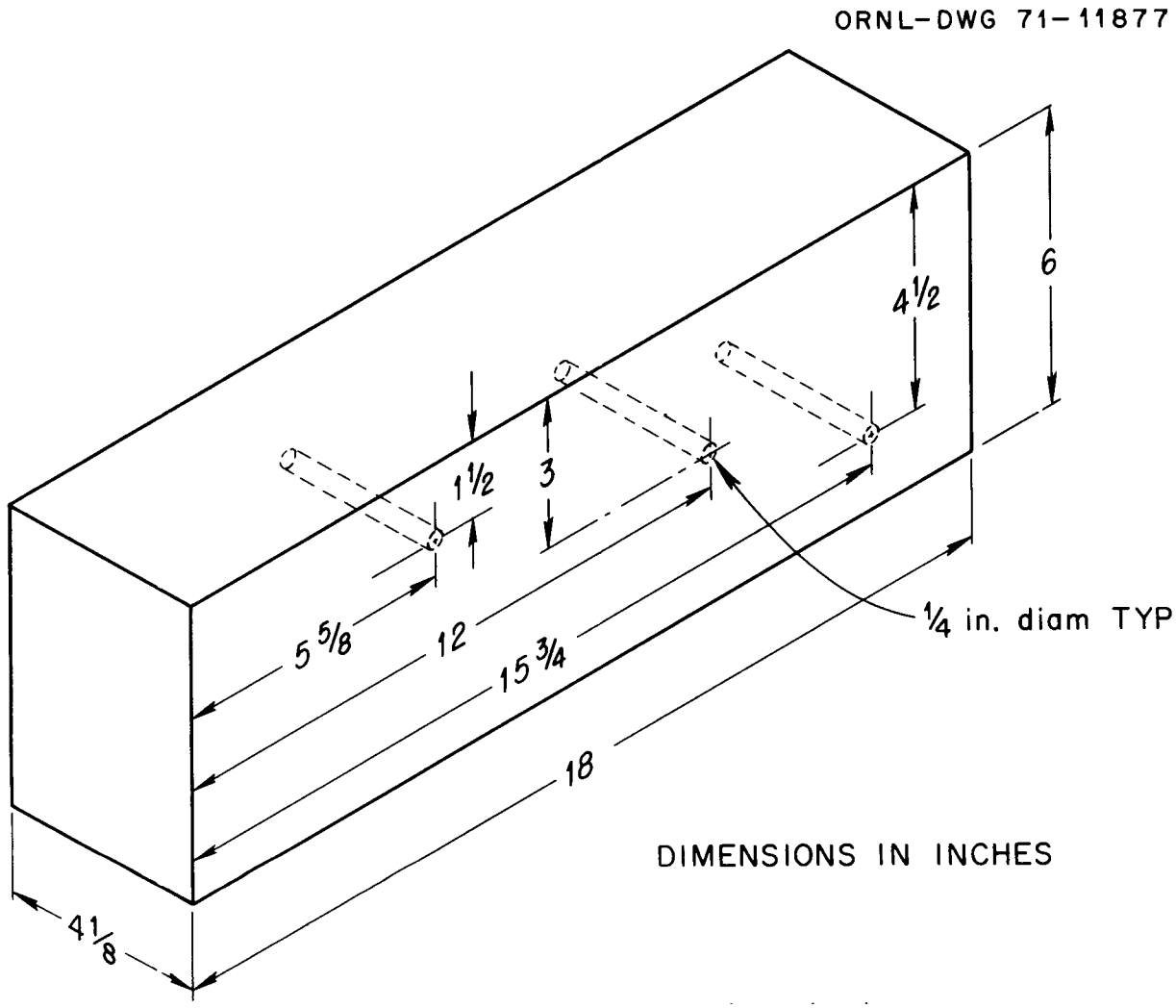

Fig. 29. Ultrasonic Reference Standard

ORNL-DWG 73-4823

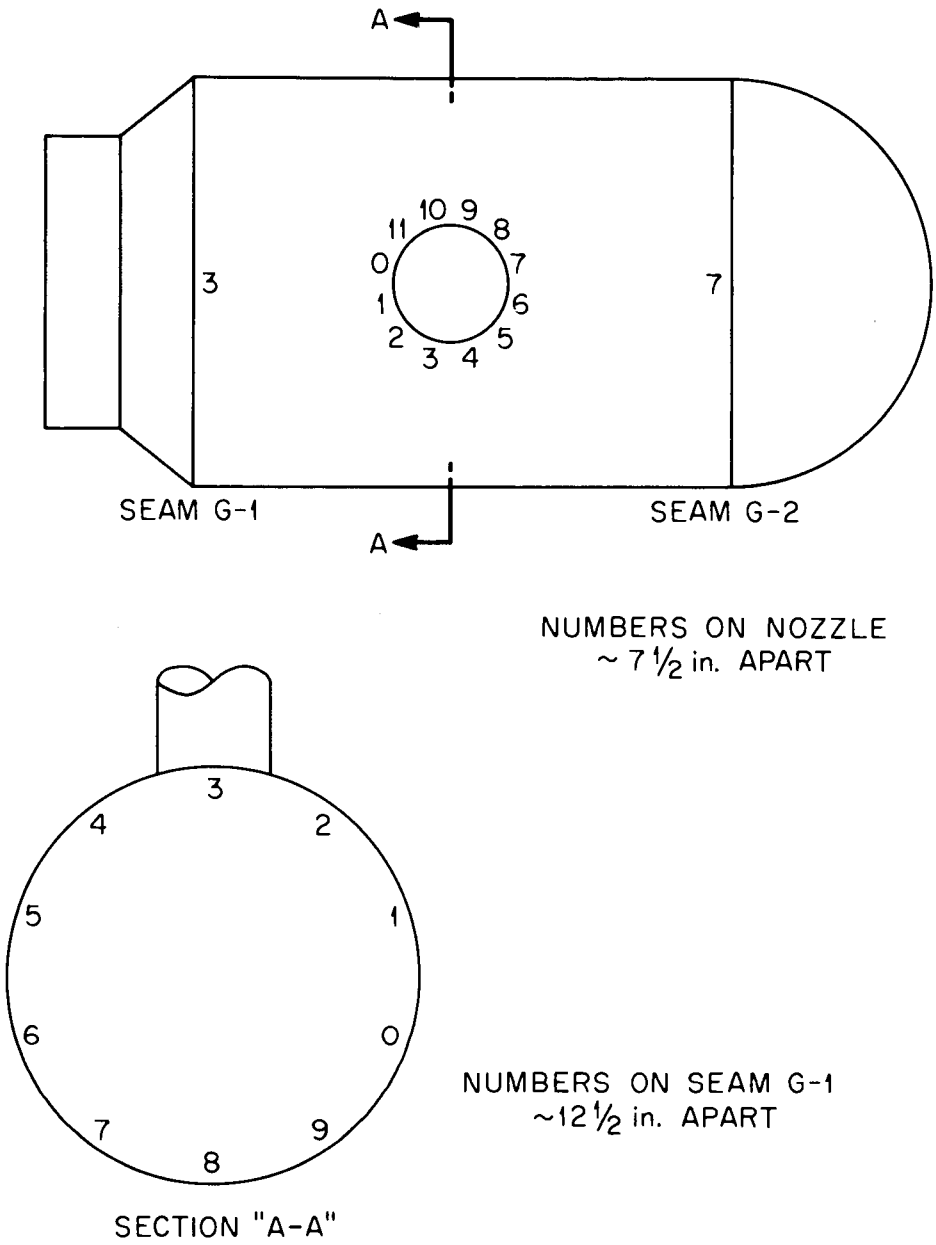

Fig. 30. Schematic of Vessel V-5 X-ray Identification Points

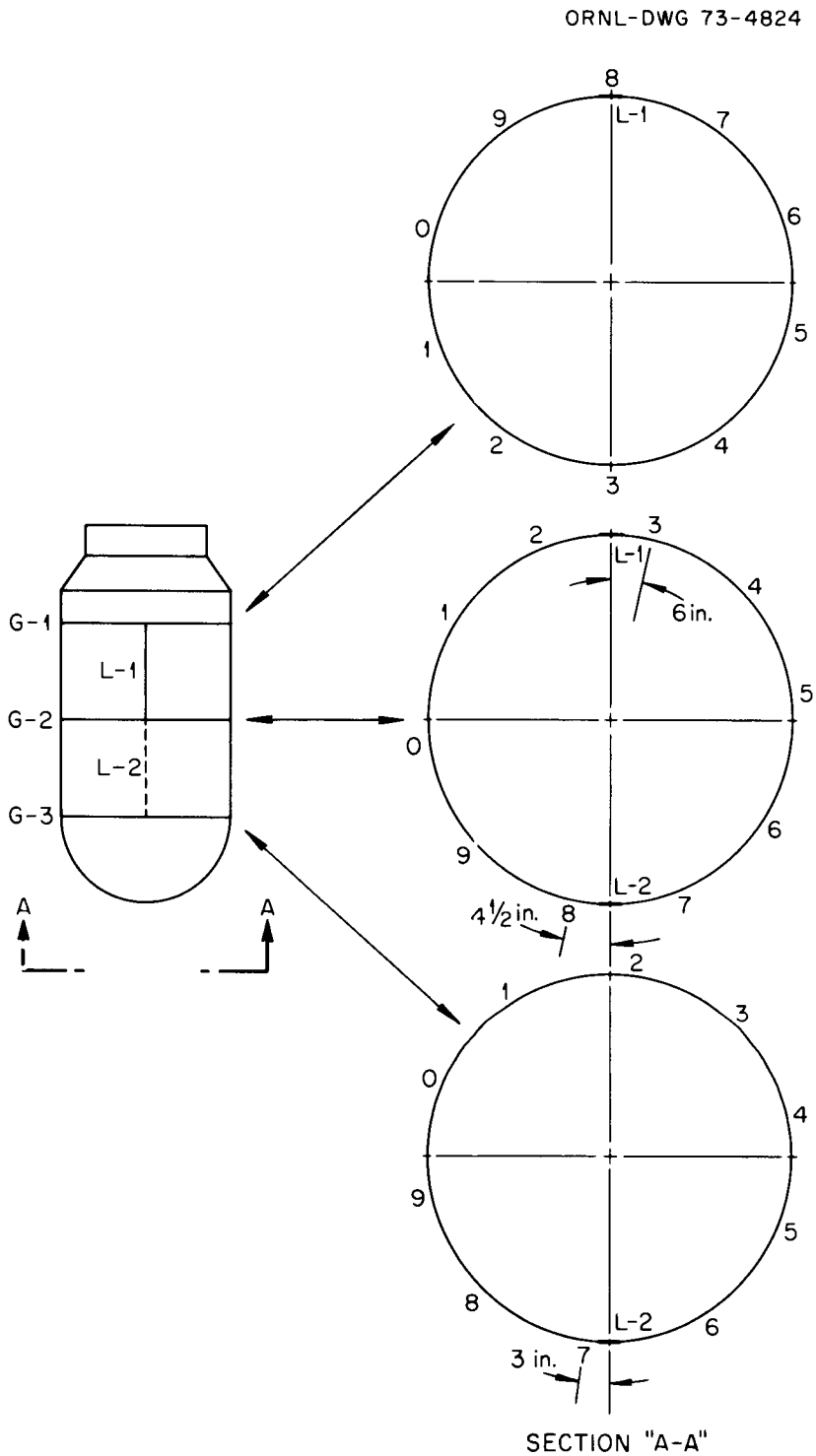

Fig. 31. Orientation of Weld Seams in Vessel V-6

ORNL-TM-4351
UC 80 - Reactor Technology

INTERNAL DISTRIBUTION

1. A. A. Abbatiello
2. H. G. Arnold
3. C. R. Baldock
4. C. R. Barlow(K-25)
5. S. E. Beall
6. M. Bender
7. R. G. Berggren
8. D. S. Billington
9. A. L. Boch
10. C. R. Brooks
11. R. H. Bryan
12. D. A. Canonico
13. T. G. Chapman
14-34. C. E. Childress
35. J. H. Coobs
36. J. M. Corum
37. S. J. Cromer
38. W. B. Cottrell
39. F. L. Culler, Jr.
40. R. W. Derby
41. K. Farrel
42. M. H. Fontana
43. A. P. Fraas
44. F. J. Furman
45. W. R. Gall
46. P. A. Gnadt
47. B. L. Greenstreet
48. R. C. Gwaltney
49. T. L. Hebble
50. R. F. Hibbs
51. M. R. Hill
52. G. W. Keilholtz
53. K. K. Klindt
54. F. J. Lambert
55. J. A. Lane
56. M. I. Lundin
57. R. N. Lyon
58. R. W. McClung
59-60. J. R. McGuffey
61. H. G. MacPherson
62. J. R. McWherter
63. J. G. Merkle
64. R. P. Milford
65. S. E. Moore
66. F. H. Neill
67. G. W. Parker
68. R. B. Parker
69. P. Patriarca
70. H. A. Pohto(Y-12)
71. C. E. Pugh
72. G. C. Robinson
73. O. A. Rogers
74. M. W. Rosenthal
75. T. H. Row
76. C. D. St.Onge(Y-12)
77. G. Samuels
78. A. W. Savolainen
79. C. E. Segaser
80. M. J. Skinner
81. G. M. Slaughter

82. J. E. Smith
83. W. J. Stelzman
84. J. O. Stiegler
85. D. A. Sundberg
86. C. A. Sweet
87. D. B. Trauger
88. A. M. Weinberg
89. R. C. Weir
90-96. G. D. Whitman
97-126. F. J. Witt
127. G. T. Yahr
128-130. Central Research Library
131-132. Y-12 Document Reference Section
133-167. Laboratory Records Department
168. Laboratory Records, R.C.
169-170. Technical Information Center

EXTERNAL DISTRIBUTION

171-172. Director, Division of Reactor Research and Development, U.S. Atomic Energy Commission, Washington, DC 20545
173. RRD Senior Site Representative, ORNL
174. Research and Technical Support Division, AEC-ORO, P.O. Box E, Oak Ridge, Tn. 37830
175-268. Given distribution as shown in TID-4500 under Reactor Technology category (25 copies — NTIS)