APR 13 1971

ORNL-4602
UC-80 — Reactor Technology

THE EFFECT OF IODINE DECAY HEAT ON CHARCOAL ADSORBERS

R. P. Shields
M. Simon-Tov

OAK RIDGE NATIONAL LABORATORY
operated by
UNION CARBIDE CORPORATION
for the
U.S. ATOMIC ENERGY COMMISSION

Printed in the United States of America. Available from
National Technical Information Service
U.S. Department of Commerce
5285 Port Royal Road, Springfield, Virginia 22151
Price: Printed Copy $3.00; Microfiche $0.95

This report was prepared as an account of work sponsored by the United States Government. Neither the United States nor the United States Atomic Energy Commission, nor any of their employees, nor any of their contractors, subcontractors, or their employees, makes any warranty, express or implied, or assumes any legal liability or responsibility for the accuracy, completeness or usefulness of any information, apparatus, product or process disclosed, or represents that its use would not infringe privately owned rights.

ORNL-4602

Contract No. W-7405-eng-26

THE EFFECT OF IODINE DECAY HEAT ON CHARCOAL ADSORBERS

R. P. Shields
Reactor Chemistry Division

M. Siman-Tov
General Engineering Division

APRIL 1971

OAK RIDGE NATIONAL LABORATORY
Oak Ridge, Tennessee
operated by
UNION CARBIDE CORPORATION
for the
U.S. ATOMIC ENERGY COMMISSION

TABLE OF CONTENTS

	PAGE
I. Introduction	1
II. Charcoal Adsorption Systems	2
Charcoal Adsorber Units	2
Containment Filter Systems	5
III. Mathematical Basis for the Thermal Analysis of a Charcoal Adsorber	9
The General Heat Balance Equation	9
Simplified Mathematical Models of Charcoal Adsorber Unit	11
IV. Development of Computer Codes	13
Heat Source	14
Charcoal Characteristics	17
Volumetric Heat Transfer Coefficient	17
Computer Codes	19
ENIS Code	19
CHART Codes	21
V. Application of Computer Codes	24
Heat Generation by Decay of Radioiodine	24
Charcoal Parameters	29
Volumetric Heat Transfer Coefficient	31
Examples of Code Applications	32
VI. Cooling the Charcoal Adsorber by Natural Air Convection	44
VII. Summary	49
ENIS Code	52
CHART Code	53
Appendices	55
Appendix A. Analytical Solution of the Diffusion Equation for the Infinite Slab Model (Derivation of Equation 23)	56
Appendix B. A Computer Program for Calculating Heat Generation, in a Charcoal Adsorber, Due to Iodine Decay	72
Appendix C. CHART Code.	76
Appendix D. Application of CHART to a Research or Production Type Reactor	80
Appendix E. STACK: An XTRAN Computer Program for Calculating Stack Parameter vs Fraction of Decay Heat Removed from Charcoal Adsorbers	93
References	98

ABSTRACT

A procedure for the thermal analysis of the charcoal adsorber, in a reactor containment system, has been developed to estimate maximum temperatures which may prevail under accident conditions. A differential equation which relates the charcoal temperature to the heat generation rate, air flow rate, and the heat parameters of air and charcoal has been solved both analytically and numerically. The analytical method assumes a two inch thick slab of charcoal only and is applicable to high flow rates. A computer code has been developed for numerical solution of the equation for the charcoal slab in both one and three-dimensions. The principal considerations have been given to very low flows and for times soon after onset of the accident; conditions which pose the greatest threat to the charcoal. Examples are given of the application of this code to reactor off-gas charcoal adsorbers.

I. INTRODUCTION

Modern nuclear reactors are equipped with many sophisticated engineered safeguards to prevent or to limit the release of fission products in the event of a reactor malfunction. All safety measures initiated after an accident are directed toward fixing the fission products into some controllable form such as in solution or in suspension in the case of containment spray systems or onto solid surfaces as in the case of particulate filters and charcoal adsorber units.

In any process that collects the fission products some means must be provided for dissipating the heat generated by radioactive decay. Air flow through the charcoal normally provides this feature for iodine adsorption units; however, certain combinations of iodine loading and reduced air flow can be assumed which will produce a temperature rise into the critical range. Since charcoal is combustible and considering the relative importance of the positive containment of iodine isotopes in safety analyses, it is of importance to investigate the various factors which affect the temperature development and distribution in charcoal adsorbers caused by iodine adsorption under accident conditions.

This report covers part of a continuing program sponsored by the USAEC Division of Operational Safety on the general subject of charcoal adsorbers by iodine decay heat. Earlier phases of the work involved an investigation of the ignition process in charcoal[1] and the influence of iodine fission products on the ignition process.[2,3] The latter tests were conducted with real iodine fission products produced in an in-pile facility. This report and a brief paper at the Eleventh AEC Air Cleaning Conference[4] cover the effort to develop and apply a computer program to allow an estimation of the temperature development in full-scale charcoal adsorption systems to be made. During this phase of the program it was necessary that some laboratory measurements be made of certain parameters such as volumetric heat transfer coefficients, heat capacities, charcoal properties, etc; these measurements are essentially complete and will be detailed in a companion report to be issued in the near future. Therefore, this report will be limited to a discussion of the computer programs and their applicability; certain parametric values will be estimated for the purpose of illustrating the use of the program.

II. CHARCOAL ADSORPTION SYSTEMS

Charcoal adsorption systems of various configurations are used in the containment schemes of the several types of nuclear reactors. AEC research and production reactors utilize negative pressure containment with continuous ventilation through gas decontamination systems utilizing charcoal and other components; nuclear power reactors of the boiling water type (BWR) utilize a single-pass gas decontamination system, containing charcoal, located outside the primary containment; some of the nuclear power reactors of the pressurized water type (PWR) utilize large recirculating gas decontamination systems located within the containment. Each type of charcoal system will be subjected to differing iodine loadings and operating conditions following an accident. Systems used in the PWR's will probably be subjected to the most severe combination of iodine loading and operating conditions. Figure 1 is a composite illustration of several of these systems.

Charcoal Adsorber Units

The individual adsorber units which make up the adsorber system for nuclear reactors are available in two configurations. Both types contain a layer of granular charcoal held between perforated sheet metal through which the air flows. The method used for supporting the enclosed layer of charcoal gives rise to the two types of adsorber units generally used.

In one type of unit the charcoal is held between perforated sheet folded in an accordian-like pleat so that about 15 ft^2 of face area can be contained in a 2 ft x 2 ft frame - the so-called pleated adsorber units. Figure 2 contains a photograph of this type of unit as well as a sketch of construction detail. Such units contain about 55 pounds of charcoal and provide a charcoal depth of approximately one inch. Charcoal adsorber units of the pleated type are generally utilized by the AEC research and production reactors which have the continuous ventilation, negative pressure containments.

The second type of adsorber unit contains two individual layers of charcoal held between perforated metal sheet. These layers are fixed one above the other in a drawer-like metal assembly; these units contain

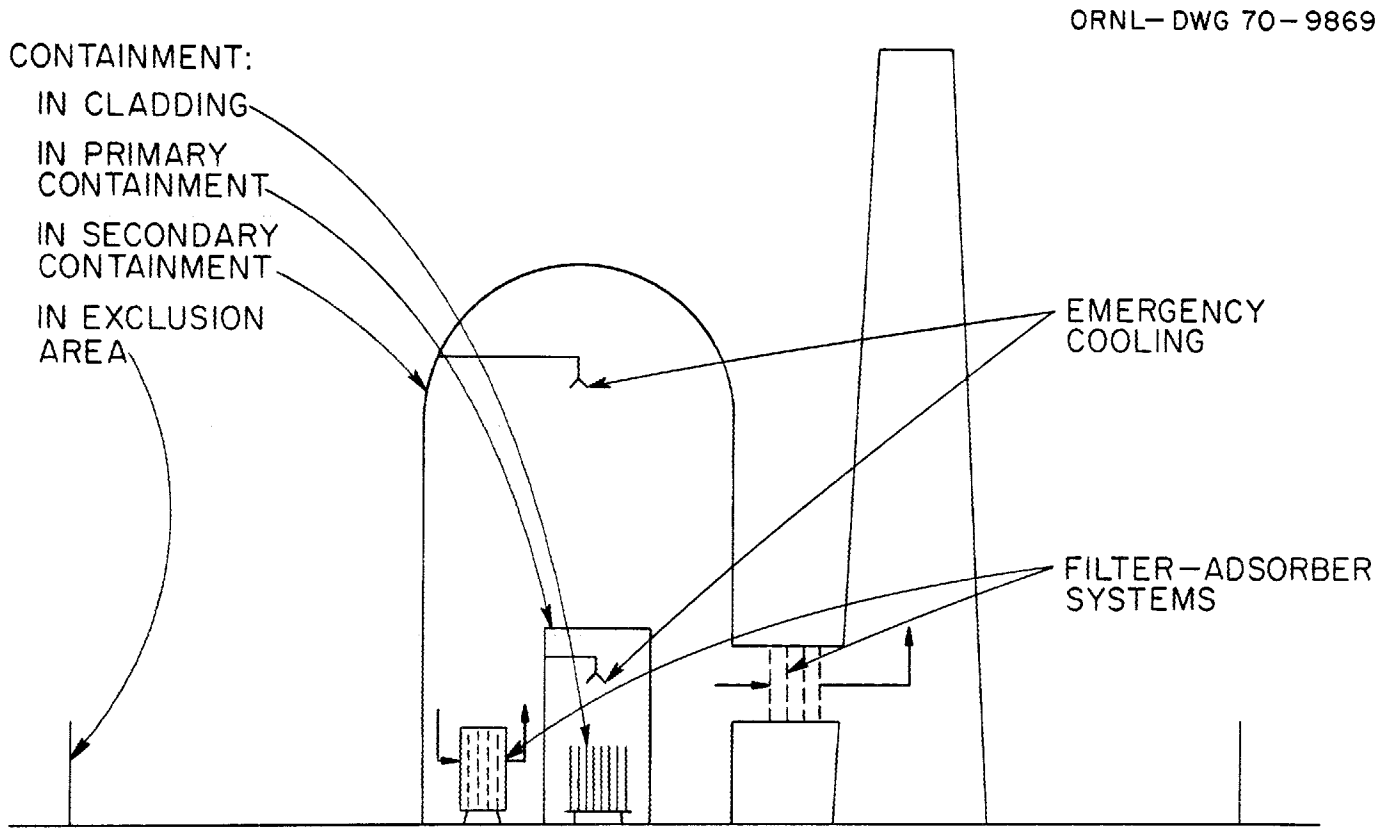

Figure 1. Some Features of Fission Product Containment System.

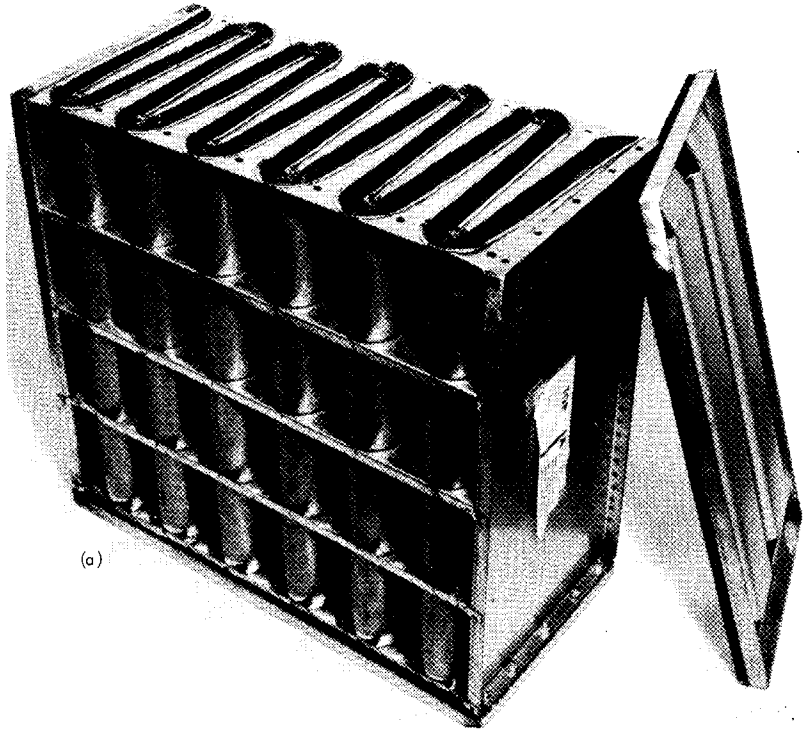

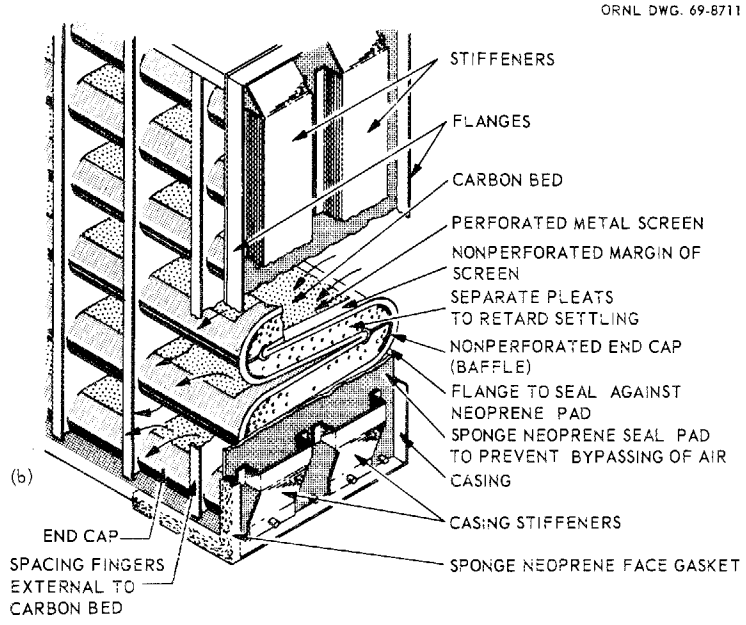

Figure 2. (a) Pleated-Bed Charcoal Adsorber. End plate removed. (Photgraph courtesy of Barnebey-Cheney Co.) (b) Cutaway of 1-in.-pleated-bed adsorber.

approximately 45 pounds of charcoal and present about 8 ft^2 of face area. These units, often called tray-type adsorbers, present a 2 inch depth of charcoal for the air to pass through. Air enters the outside face, as shown by the arrows in Fig. 3, travels through the charcoal mass, into the void space between the charcoal layers, and finally into the exhaust plenum. In practice, many of these units can be fitted, one above the other, into a metal framework section, as illustrated in Fig. 4, and as many of these sections as needed can be aligned to form the desired adsorber system. Charcoal adsorber units of the tray type are generally utilized in off-gas systems contained in nuclear power reactors of both the BWR and PWR types.

Containment Filter Systems

A complete filter system which serves to remove volatile fission products from containment air following an accident can contain as many as four different types of filters or adsorbers. At the entrance to the system a demister unit may be employed to remove entrained water droplets which could be present in the containment atmosphere following a loss-of-coolant type accident. These water droplets are removed to prevent water-blinding of the particle filtering media following the demister unit. Following the demister one may find a low efficiency particle filter referred to as a roughing or pre-filter. This unit serves to limit the buildup of particle deposits on the high efficiency particle filter (HEPA) units which follow. The charcoal adsorber units are usually located downstream of these HEPA units to remove (or decontaminate) the various forms of radioiodine. In some cases the charcoal adsorbers are followed by a second bank of HEPA filter units to trap any charcoal containing radioiodine which may be blown from the adsorbers. Of course, all these filter-adsorber units will trap some of the released radioiodine and will be subjected to decay heating; however, the charcoal adsorber will be the only unit considered in this report.

AEC research and production reactors are provided with continuously-operating off-gas systems contained in underground concrete cells or in separately-contained aboveground enclosures; these systems exhaust to a gas disposal stack. An example of an underground filter-adsorber system for one AEC reactor is provided in Fig. 5. Nuclear power reactors of the

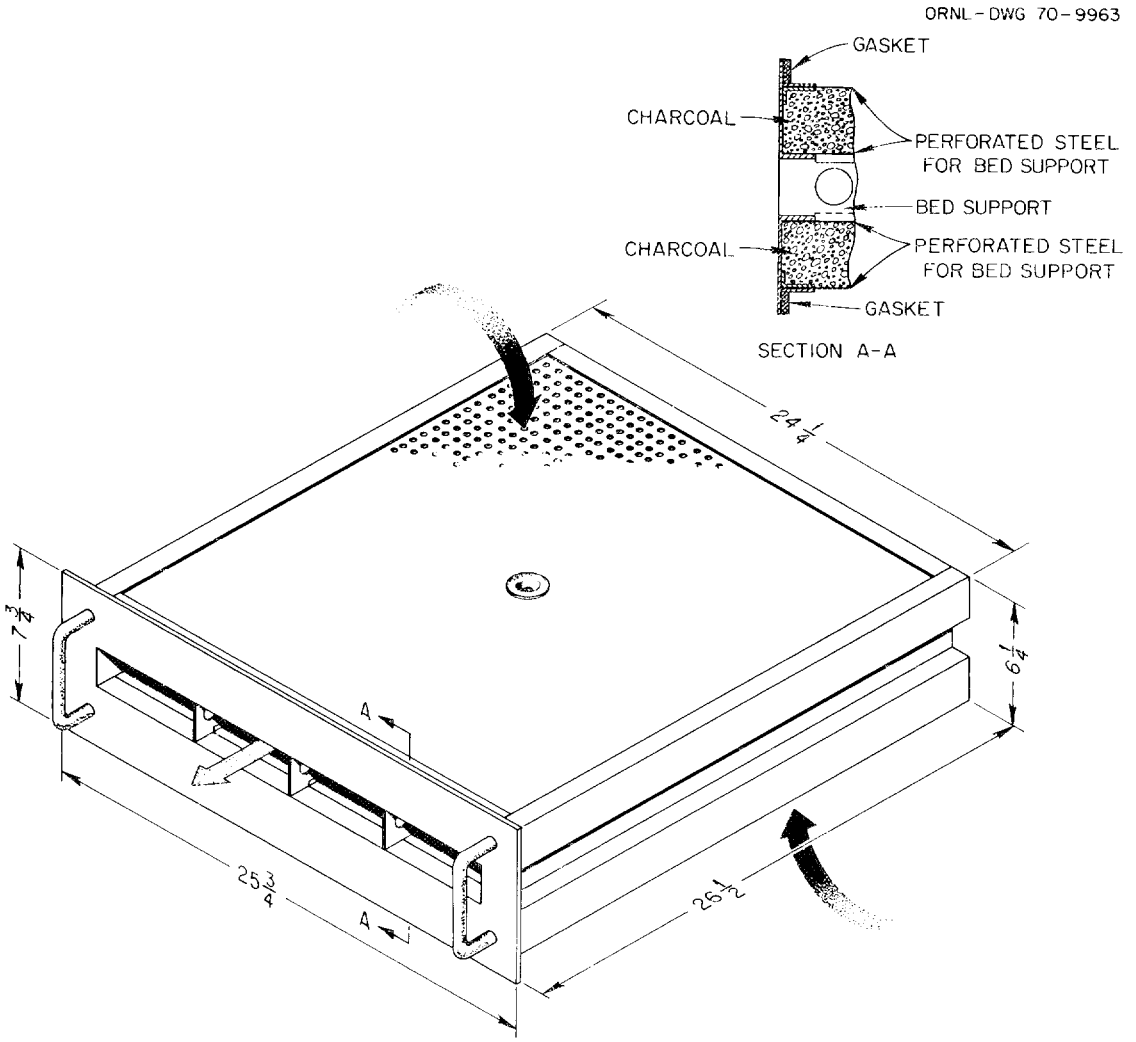

Figure 3. Tray-Type Charcoal Adsorber.

ORNL-DWG 71-1402

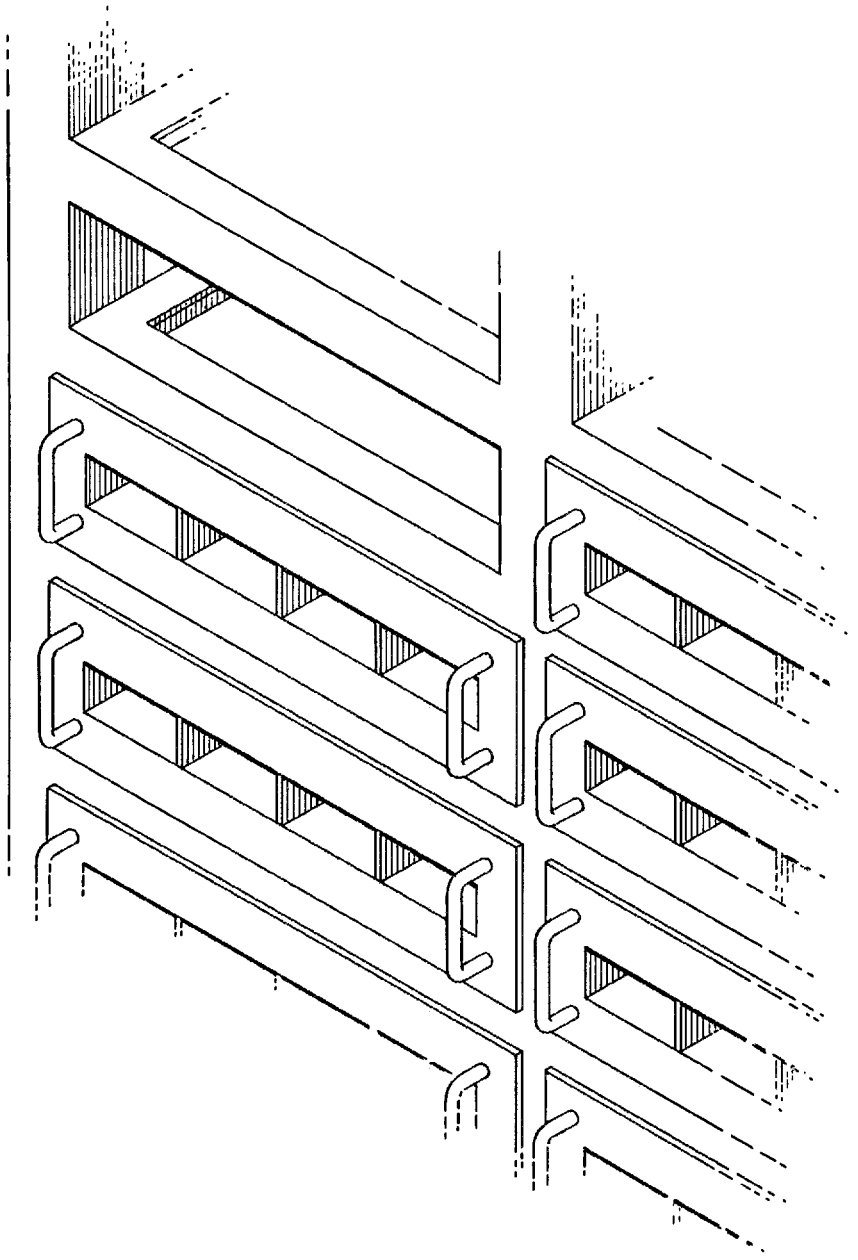

Figure 4. Assembly of Tray-Type Charcoal Adsorber.

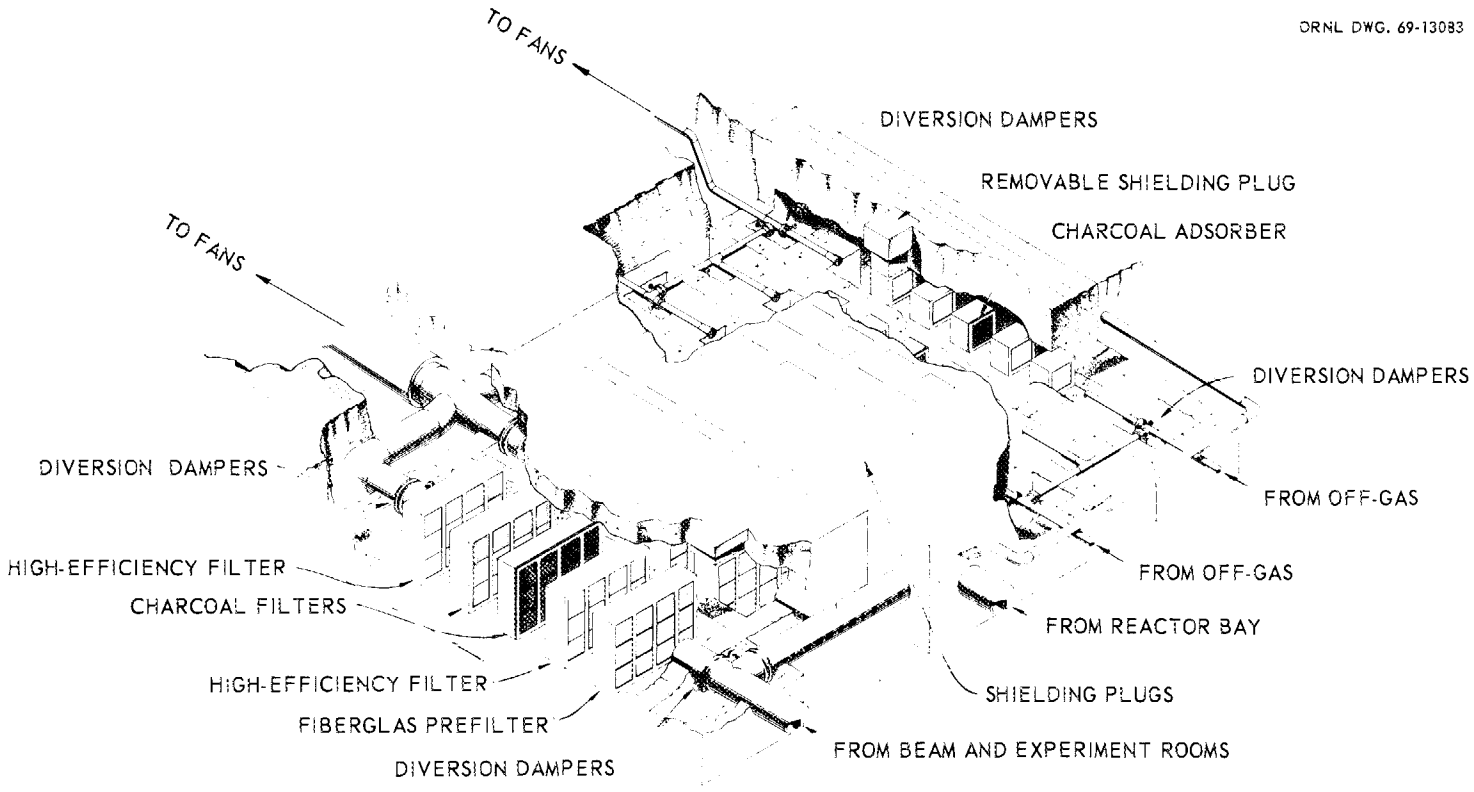

Figure 5. High Flux Isotope Reactor Filter System.

boiling water type generally contained a standby filter system containing HEPA filter and charcoal adsorbers and may contain a heating section for humidity control; these are single-pass systems which exhaust to a stack. Some power reactors of the pressurized water type contain recirculating filter systems within the containment which include demisters, HEPA filter units and, in many cases, charcoal adsorbers; these systems exhaust back into containment. Containment gases are exhausted through a separate system to the stack at some length of time after the accident.

Examples of all these systems along with construction details may be found elsewhere.[5]

III. MATHEMATICAL BASIS FOR THE THERMAL ANALYSIS OF A CHARCOAL ADSORBER

In planning the development of the necessary calculational tools for making a thermal analysis of a charcoal adsorber, it was decided to start with a basic description of heat generation and heat loss founded on accepted heat transfer principles. The plan therefore was to define a mathematical model of the adsorber unit and then produce computer codes to facilitate the calculations. Values of physical parameters critical to the codes are to be measured in the laboratory in a concurrent effort.

The General Heat Balance Equation

The general heat balance performed on a unit volume of the charcoal mass assuming air flows in one direction only is

$$\rho_b C_{p_b} \frac{\partial T_b}{\partial t} + \rho_g C_{p_g} v_g \frac{\partial T_g}{\partial x} = k_b \nabla^2 T_b + q''' \qquad (1)$$

where

T_b = temperature of the charcoal mass,

T_g = temperature of the cooling gas,

ρ_b, C_{p_b} = density and specific heat of the charcoal

ρ_g, C_{p_g} = density and specific heat of the cooling gas

t = time

x = distance along the direction of cooling gas flow

v_g = velocity of cooling gas

k_b = effective thermal conductivity of the charcoal

q''' = volumetric heat generation rate in the charcoal mass (heat per unit time per unit volume)

and the operator

$$\nabla^2 = \frac{\partial^2}{\partial x^2} + \frac{\partial^2}{\partial y^2} + \frac{\partial^2}{\partial z^2}$$

The first term on the left is the heat absorbed by the charcoal itself and the second term on the left is the heat absorbed by the cooling gas. The first term on the right is the heat diffused by conduction and the second term on the right is the heat source in the charcoal mass. The heat source depends on the nuclear characteristics of the isotopes adsorbed and is normally a function of time and position along the x direction (gas flow direction). It exists only in the charcoal mass itself and is assumed to be zero in the steel structure of the unit (see Section IV for detailed expression of the heat source).

The heat absorbed by the gas will depend on the capability of the charcoal particles to transfer heat to the gas flowing around them. The heat absorbed by the gas per unit volume of the bed can be expressed as

$$S''' = hA'''_{eff} (T_b - T_g) \tag{2}$$

where

S''' = heat absorbed by the gas per unit volume of charcoal, Btu/min-in.^{3}

h = film heat transfer coefficient between the surface of the charcoal particles and the gas flowing around them, Btu/min-in.^{2}-°F

A'''_{eff} = an effective surface area of the particles available for heat transfer for each unit volume of bed, 1/in.

Since h and A'''_{eff} are characteristic to the charcoal mass and the cooling gas, we will let

$$H = hA'''_{eff} \tag{3}$$

and we can write

$$S''' = \rho_g C_{p_g} v_g \frac{dT_g}{dX} = H(T_b - T_g) \tag{4}$$

where H will be called the "volumetric heat transfer coefficient" between the charcoal mass and the cooling gas; its dimensions are Btu/min-in.^{3}-°F.

Substituting Eq. (4) into Eq. (1), we get

$$\rho_b C_{p_b} \frac{\partial T_b}{\partial t} = k_b \nabla^2 T_b + q''' - H(T_b - T_g). \tag{5}$$

Equation (5), together with Eq. (4), is the basic equation for finding the temperature distribution in the charcoal adsorber.

The volumetric heat transfer coefficient, H, can be calculated approximately by using existing correlations for heat transfer coefficient in packed adsorbers and evaluating the effective heat transfer area per unit volume of the adsorbent. However, the available correlation for heat transfer coefficient in packed adsorbers is not very reliable especially in the low gas flow range. Also, the free surface area of the charcoal particles actually in contact with the cooling gas cannot be evaluated with good accuracy. Therefore, experimental measurement of H is usually needed. For a given charcoal adsorber the volumetric heat transfer coefficient will be a function of the gas flow and the physical properties of both the gas and the charcoal. (A more detailed discussion on the volumetric heat transfer coefficient is given in Section IV).

Simplified Mathematical Models of Charcoal Adsorber Unit

In this work we considered three models of the charcoal adsorber unit, a general description for which has been given in Section II. One model considers the charcoal adsorber as an infinite one-dimensional slab of charcoal, 2 in. thick, with no heat loss to environment except by way of the flowing gas. This model will be referred to as the "infinite slab". A second model considers a finite slab (the dimensions can be varied but the values used were 2 ft by 2 ft in cross section and 2 in. thick). Heat loss is to the flowing gas and by radiation and natural convection to the environment from the four vertical 2 ft by 2 in. side faces of the slab. This model will be referred to as the "3-dimensional slab." A third model represents a single tray-type charcoal adsorber. It includes two charcoal masses (2 ft x 2 ft x 2 in. each) and the steel structure around them. Heat loss is to the flowing gas, to the environment and to the

steel structure itself. This model will be referred to as the "3-dimensional unit" model.

At low gas flows, or when no flow is assumed, the steel structure and heat loss to the environment both have a significant effect on the resulting temperature distribution, and therefore the "3-dimensional unit" model should be used. For relatively high flows it can be assumed that the heat loss to the cooling gas is the dominating cooling effect and the "infinite slab" model can be used.

The temperature distribution for the "infinite slab" model was found by two separate methods, based on Eqs. (4) and (5). One method is analytical in its approach and the other is based on a general heat transfer computer code. Since for the "infinite slab", the gas velocities are assumed to be relatively high, the cooling gas temperature T_g does not rise much while penetrating the charcoal mass and can be considered to be constant. Letting

$$T'_b = T_b - T_g$$

and recalling that in an infinite slab, conduction in the bed occurs only in the X direction, will reduce Eq. (5) to

$$\rho_b C_{p_b} \frac{\partial T'_b}{\partial t} = k_b \frac{\partial^2 T'_b}{\partial x^2} + q''' - HT'_b. \qquad (6)$$

The boundary conditions are:

$$\frac{\partial T'_b}{\partial x} = 0 \text{ for } x = 0 \text{ and any } t$$

$$\frac{\partial T'_b}{\partial x} = 0 \text{ for } x = \ell \text{ and any } t$$

$$T_b = T_o \text{ for } t = 0 \text{ and any } x,$$

where $x = 0$ is the front face of the charcoal mass and $t = 0$ is the time at which radioactive iodine first reaches the charcoal adsorber. The analytical solution of the "infinite slab" is based on Eq. (6) and is explained in Section IV. The detailed solution and its computer program are given in Appendix A.

The second method used to calculate the temperature distribution in the "infinite slab" is based on a general heat transfer computer code and takes into account the change in cooling gas temperature as it propagates

through the charcoal mass. The basic equation to be solved is a one-dimensional form of Eq. (5) where T_g is a function of temperature.

The "3-dimensional slab" and "3-dimensional unit" models must take into account the temperature changes in the cooling gas itself as well as heat transfer to the metal structure. Here, Eq. (5) must be used in its complete form coupled with Eq. (4), i.e.,

$$\rho_b C_{p_b} \frac{\partial T_b}{t} = k_b \left[\frac{\partial^2 T_b}{\partial x^2} + \frac{\partial^2 T_b}{\partial y^2} + \frac{\partial^2 T_b}{\partial z^2} \right] + q''' - H(T_b - T_g) \tag{7}$$

where T_g is given from Eq. (4) by

$$\rho_g C_{p_g} v_g \frac{\partial T_g}{\partial x} = H(T_b - T_g). \tag{8}$$

The initial conditions are

$T_g = T_o$ at $t = 0$ and any x,

$T_b = T_o$ at $t = 0$ and any x

The boundary condition for the cooling gas is

$T_g = T_o$ for $x = 0$ and any t.

The boundary conditions for the adsorber unit are complicated and will be best described in the illustrative case given in Section V. The same general heat transfer computer code as used for the "infinite slab" is used to solve the "3-dimensional slab" model and a description of it is given in Section IV. This same code has the capability to solve the "3-dimensional unit" model but that solution has not been performed.

IV. DEVELOPMENT OF COMPUTER CODES

The transposition of the mathematical models, just discussed, into computer codes is the subject of this section of the report. Relationships for the heat generation and heat transfer characteristics for charcoal masses were developed and then incorporated into the basic heat diffusion equations. Solutions were then developed and coded for the computer.

Heat Source

Heat generation in the charcoal adsorber comes from beta and gamma activity resulting from the radioactive decay of iodine isotopes. Let a_i and g_i be the decay heat per thermal Mw of reactor power produced by the ith isotope from beta and gamma activity, respectively. If the reactor power is P(t) thermal Mw's, then the decay heat of the ith isotope will be P(t) a_i and P(t) g_i Btu/min for beta and gamma activity, respectively. Since only a certain fraction, F, of the radioactive material coming from the reactor is absorbed by the charcoal, the total decay heat in the charcoal bed itself will be

$$F\,P(t)(a_i + g_i)\ \text{Btu/min.}$$

The time dependent decay heat will be then

$$FP(t)(a_i + fg_i)e^{-\lambda_i(t + t_D)}\ \text{Btu/min}$$

where λ_i is the decay constant of isotope i, t_D is the time delay between end of fissioning and beginning of actual adsorption, f is the fraction of the gamma heat which does not escape the bed, and t is time elapsed from beginning of actual adsorption. If the volume of the charcoal adsorber is V_b, then the average specific heat generation due to radioactive decay in the bed is

$$q_i'''(x) = \frac{FP(t)}{V_b}(a_i + fg_i)e^{-\lambda_i(t + t_D)}\ \text{Btu/min-in.}^3 \qquad (9)$$

However, since iodine concentration is not uniform along the depth of the charcoal mass, we will assume here an exponential distribution according to

$$\beta(x) = \beta_o e^{-bx} \text{ so that } \frac{1}{\ell}\int_o^{\ell}\beta(x)dx = 1$$

where (x) is the ratio between local and average radioactive iodine concentration, β_o is the ratio between maximum (x = 0) and average radioactive iodine concentration and b is the attenuation factor. It is clear that

$$1 = \frac{1}{\ell}\int_o^{\ell}\beta_o e^{-bx}dx = \frac{\beta_o}{b\ell}(1 - e^{-b\ell}).$$

Therefore

$$\beta_o = b\ell/(1 - e^{-b\ell})$$

where ℓ is the thickness of the charcoal mass.

The local radioactive iodine concentration then is

$$\beta(x)a_i = \beta_o a_i e^{-bx} = \frac{b\ell a_i}{1 - e^{-b\ell}} e^{-bx}. \tag{10}$$

However, since b is different for elemental iodine (I_2) and methyl iodide (CH_3I), we must take their local concentrations into account separately. Assuming β_1 and β_2 are the fractions of I_2 and CH_3I, respectively, we get by using Eqs. (9) and (10) that the local specific heat generation in the bed is

$$q_i'''(x,t) = \frac{FP(t)}{V_b}[(\frac{\beta_1 b_1 \ell}{1 - e^{-b_1\ell}} e^{-b_1 x} + \frac{\beta_2 b_2 \ell}{1 - e^{-b_2\ell}} e^{-b_2 x})a_i$$

$$+ fg_i]e^{-\lambda_i(t + t_D)} \text{ Btu/min-in.}^3. \tag{11}$$

Note that it was assumed that the gamma heating (indicated by the fg_i term) is not position dependent, hence the term developed in Eq. (10) was not multiplied by fg_i in Eq. (11). Let

$$B_1 = \frac{P(t)}{V_b} \frac{\beta_1 b_1 \ell}{1 - e^{-b_1 \ell}} \tag{12}$$

$$B_2 = \frac{P(t)}{V_b} \frac{\beta_2 b_2 \ell}{1 - e^{-b_2 \ell}} \tag{13}$$

$$G = \frac{P(t)}{V_b} f \tag{14}$$

and we get

$$q_i'''(x,t) = F[(B_1 e^{-b_1 x} + B_2 e^{-b_2 x})a_i + Gg_i]\, e^{-\lambda_1(t + t_D)}.$$

Summing up the effect of all the isotopes, we get

$$q'''(x,t) = F[(B_1 e^{-b_1 x} + B_2 e^{-b_2 x}) \sum_{i=1}^{m} a_i e^{-\lambda_i e(t+t_D)}$$

$$+ G \sum_{i=1}^{m} g_i e^{-\lambda_i(t+t_D)}]. \tag{15}$$

If in addition we take into account that the loading of radioactive material onto the adsorbers is gradual as in the case for recirculating adsorber systems according to:

$$C = C_o(1 - e^{-aRt/V}), \tag{16}$$

where

C = amount of iodine on charcoal at time t

C_o = initial amount of iodine in containment

a = fraction of iodine removed from air as it passes through charcoal (assumed here to be 0.9)

R = air flow rate, ft^3/min

V = volume of containment, ft^3

t = time elapsed from beginning of iodine adsorption by charcoal,

Then

$$q'''(x,t) = F[(B_1 e^{-b_1 x} + B_2 e^{-b_2 x}) \sum_{i=1}^{m} a_i e^{-\lambda_i (t+tD)} + G \sum_{i=1}^{m} g_i e^{-\lambda_i (t+t_D)}](1 - e^{-(aR/V)t}), \tag{17}$$

where

$q'''(x,t)$ = heat generation rate per unit volume of charcoal bed

x = distance from front face of charcoal bed in direction of gas flow

t_D = time delay between end of fissioning and beginning of iodine adsorption.

b_1 = attenuation coefficient for elemental iodine

b_2 = attenuation coefficient for methyl iodide

F = fraction of total iodine adsorbed by the charcoal filter

B_1, B_2 and G are given in Eqs. (12), (13), and (14), respectively. In those equations

$P(t)$ = reactor power in Mw(t)

V_b = volume of charcoal bed

ℓ = thickness of charcoal layer

$(1 - f)$ = fraction of gamma rays escaping from charcoal mass without capture

β_1, β_2 = fractions of iodine and methyl iodide, respectively.

a_i, g_i, λ_i = see Table D-3, Appendix D.

A computer program was written for the heat generation rate per unit volume, based on Eq. (17). The program is written in XTRAN which is a version of Fortran IV for the time-sharing computer of Com-Share Company. A listing of this program appears in Appendix B. The program will output the minimum, (at x = 2.0 in.), the maximum (at x = 0.0), and the average heat generation rates per unit volume as well as the total heat generation rate for the adsorber as functions of time.

Charcoal Characteristics

In order to perform heat transfer calculations in packed adsorbers, one must know adsorbent characteristics like shape, porosity, sphericity and mean diameter of the particles. The porosity in this case is not concerned with internal cavities of the charcoal particles, but only with the void space between the solid particles in packed array. Porosity is defined as volume of void space divided by the total volume of the adsorbent container. Sphericity is defined as the surface area of a sphere having a volume equal to that of the particle divided by the surface area of the particles. Values for these and other parameters will be given in Section V.

Volumetric Heat Transfer Coefficient

In Section III it was shown that the cooling process in adsorbers can be visualized as a volumetric heat sink which can be expressed from Eqs. (2) and (4) as

$$S''' = hA'''_{eff} (T_b - T_g) = H(T_b - T_g). \tag{18}$$

It was emphasized in Section III that some correlations do exist in the literature for calculating the film heat transfer coefficient h, but that they are not very reliable and are usually derived for high Reynolds numbers. In addition, the surface area actually available for heat transfer is not typical for all adsorbers, and it is difficult to estimate it. Experimental work was needed then to evaluate the volumetric heat transfer coefficient, H, for charcoal adsorbers. Such work is being accomplished and will be reported separately. In order to have some approximate values for use here, an analytical approach was used.

If ω is the percentage of adsorbent particle area which is actually available for heat transfer, the volumetric heat transfer coefficient can be expressed as

$$H = hA'''_{eff} = h \frac{A_p N\omega}{V_p N(\frac{1}{1-d})} = h\omega\ (1 - d)\ \frac{A_p}{V_p} \tag{19}$$

where

h = film heat transfer coefficient from the particle surface to the gas, Btu/hr-ft^2-°F

ω = percentage of area actually available to heat transfer

d = bed porosity

A_p = one particle surface area, ft^2

V_p = one particle volume, ft^3

N = number of particles per unit volume of bed

H(Btu/min-in.^{3}-°F) = 9.65×10^{-6} H(Btu/hr-ft^3-°F).

In order to evaluate H we must find the heat transfer coefficient (h) between the particle surface and the gas. References 6-9 suggest possible correlations to be used. The one given by Coppage[9] seems to be most adaptable to our case although like the other three correlations, its applicability is for higher flows than the ones we are interested in. Nevertheless, it will be used as an approximation for the cases discussed in this report. The correlation for the range $6 < G/\mu A < 13{,}000$ is

$$h = \frac{EGC_p}{d} P_r^{-2/3} (4G/\mu A)^{-m} \tag{20}$$

where

C_p = specific heat, Btu/lb-°F

$G = W/S$, lb/hr-ft^2

W = total flow, lb/hr

S = total cross section area of the bed, ft^2

A = total particle surface per unit volume of bed

$= \frac{A_p}{V_p} (1 - x)$, 1/ft

Pr = Prandtl number of gas

μ = dynamic viscosity of gas, lb/hr-ft

E, m = constants which are functions of d.

Computer Codes

ENIS Code

The partial differential equation for the "infinite slab" model and the corresponding boundary conditions assumed are given in Eq. (6). The heat generation q''' is given in Eq. (15). To solve this partial differential equation a change of variables was made so that:

$$T_b'(x,t) = \psi(x,t)e^{-\alpha(H/k)t} \quad (= T_b - T_g) \tag{21}$$

where $\alpha = k_b/\rho_b C_{p_b}$. This reduces Eq. (6) to

$$\frac{\rho C_p}{\alpha} \frac{\partial\psi(x,t)}{\partial t} = k_b \frac{\partial^2\psi(x,t)}{\partial x^2} + A(x,t) \tag{22}$$

where

$$A(x,t) = (B_1 e^{-b_1 x} + B_2 e^{-b_2 x}) \sum_{i=1}^{m} a_i e^{-\beta_i t} + G \sum_{i=1}^{m} g_i e^{-\beta_i t}$$

and

$$\beta_i = \lambda_i - \alpha(H/k_b)$$

and the boundary conditions become

$$\frac{\partial\psi}{\partial x}(0,t) = 0 \text{ at } x = 0$$

$$\frac{\partial\psi}{\partial x}(\ell,t) = 0 \text{ at } x = \ell$$

$$\psi(x,0) = 0 \text{ at } t = 0.$$

By using either Green's theorem or Fourier cosine series expansion, an analytical solution of Eq. (22) is achieved (see Appendix A for details) in the form

$$T_b'(x,t) = \{-\frac{\alpha}{k_b}\left(\frac{B_1}{b_1}(1 - e^{-b_1\ell}) + \frac{B_2}{b_2}(1 - e^{-b_2\ell})\right\}.$$

$$\sum_{i=1}^{m} \frac{a_i}{\beta_i}(e^{-\lambda_1 t} - e^{-\alpha(H/k)t}) - \frac{\alpha}{k}(G) \cdot \sum_{i=1}^{m} \frac{g_i'}{\beta_i}(e^{-\lambda_1 t} - e^{-(\alpha H/k)t})\} +$$

$$\frac{2\alpha}{k_b\ell} \sum_{n=1}^{\infty} \{[\frac{b_1 B_1}{b_1^2 + (n\pi/\ell)^2}(1 - (-1)^n e^{-b_1\ell} \cdot$$

$$+ \frac{b_2 B_2}{b_2^2 + (n\pi/\ell)^2}(1 - (-1)^n e^{-b_2\ell})] \cos(n\pi x/\ell) \cdot$$

$$\sum_{i=1}^{m} a_i [\frac{e^{-\lambda_i t} - e^{-\alpha(n\pi/\ell)^2 + [(H/k_b)]t}}{\alpha(n\pi/\ell)^2 - \beta_i}]\}. \qquad (23)$$

To facilitate the use of this solution it was programmed in Fortran IV. Later the code was expanded to include the time delay parameter and also to allow the change of the volumetric heat transfer coefficient, H, with time. A plotting routine was also incorporated in the program.

The computer code is a numerical expression of Eq. (23) with some additional capabilities added to it. It will accept as input data the constants B_1, B_2, and G appearing in the heat generation term, the volumetric heat transfer coefficient, H (which can be changed five times during a single run), the time delay between end of fission and beginning of iodine adsorption in adsorbers, the locations for which printouts of temperature are desired, the time intervals for such printouts and the option to get a plot of the maximum temperature versus time. The computer code, its listing, an output sample and an input format table are given in Appendix A.

This code was used early in the program to study the several variables; its applicability was limited to gas velocities of 40 ft/min and up because of the restriction of keeping the temperature of the gas constant. This deficiency led to the development of a more exact code discussed in the next subsection.

CHART Codes

The CHART code was developed to solve the 3-dimensional models as discussed in Section 3. This model is described mathematically by Eqs. (7) and (8). Such a model is too complicated to be solved analytically. A general heat transfer computer code, named HEATING-2[10], and its modified version, HEATING-3[11], were found, after some modifications, to be most suitable for our purpose.

The HEATING heat transfer code is a general transient 3-dimensional code written in Fortran IV language for the IBM 360 computer system. It can accept both rectangular and cylindrical geometry. It solves the steady state problems by the "extrapolated Liebamann method" and the transient problems by first forward time difference in the "explicit method". Thermal properties can be temperature dependent. It can handle as many as 8000 lattice points, 100 regions, 50 materials and 50 boundary conditions. It can handle nonlinear boundary conditions (natural convection or radiation heat transfer) as well as linear ones (forced convection). It will handle problems with heat transfer from surface to surface (like in radiation from one slab to another). The heat generation in each region can be a function of position and/or time. It also has an acceleration procedure to reduce computer time without the code becoming unstable. It has a nodal generator, which means that only region coordinates must be supplied and the program generates the required nodes with their geometrical and thermal properties. The input required is generally simple (see Ref. 10 for input procedures.)

Any general heat transfer computer code for conduction is based on solving numerically the diffusion partial differential equation in the form

$$\rho C_p(\partial T/\partial t) = k\nabla^2 T + Q''' \tag{24}$$

with the corresponding boundary conditions. Heat transfer by convection can be taken into account on the boundaries only. Also the heat generation term Q''' can normally be taken into account as a function of position and time. In the case of HEATING3 this dependence had the form of

$$q'''(X,Y,Z,t) = F_1(X)\ F_2(Y)\ F_3(Z)\ F_4(t) \tag{25}$$

where $F_1(X)$, $F_2(Y)$, and $F_3(Z)$ are each a position dependent function of one coordinate and $F_4(t)$ is a time dependent function defined by a set of points (a table).

If we compare Eq. (24) to Eq. (7) which is the one we want to solve, we see that

$$Q''' = q''' - H(T - T_g) \tag{26}$$

where q''' is given by Eq. (17) and T_g must be solved from Eq. (8). It can be seen that (a) the heat generation term Q''' is a function of temperature as well as of position and time and (b) the heat generation term has a very complicated form which cannot be expressed in the form of Eq. (25).

In order to include those capabilities a number of subroutines in HEATING3 have been modified and the final version has been called "CHART". Subroutine THRMPR has been modified so that it will call the heat generation subroutine GENFN not more than twice for each node, will do it for every time step and will include in its calling arguments list the current time and temperature. Having that capability, the heat generation subroutine GENFN was rewritten so that the heat generation term can be expressed by any analytical function of position, time, and temperature. Currently Eq. (17) is used for the heat generation term. The subroutine also calculates the cooling gas temperature as function of temperature along the flow direction (based on Eq. 8) and feeds the result into the heat generation term (Eq. 26). Through the use of this technique it is possible to handle adsorber problems which are combined conduction and convection problems, using a basically heat conduction computer code. Inserting Eqs. (17) and (8) into the HEATING3 code changed the criteria which must be met in order to prevent instabilities. The largest time step allowed for stability became somewhat smaller and in addition an upper limit exists for the element size in the cooling gas flow direction.

Subroutines "CALQLT" and "HGNFN" of HEATING3 were modified to include those new criteria for stability; the criteria are described in Appendix C. Additional modifications have been made to accept and print the appropriate input data in the "MAIN" program.

In addition to the regular capabilities of HEATING3 as described in Reference 11 the CHART code can handle the following variables:

1. The power constants B_1, B_2 and G and attenuation coefficients b_1 and b_2 appearing in Eq. (17).

2. The fraction of total iodine adsorbed by the charcoal filters.
3. The inlet temperature of the cooling gas and its physical properties.
4. The location of the charcoal slab as related to the overall coordinates of the system.
5. The loading rate of the iodine on the adsorbers. A large value will impose an "instantaneous loading".
6. The time delay between end of fissioning (shutdown) and beginning of actual iodine adsorption.
7. The velocity of the cooling gas at the beginning of iodine adsorption and at the time when 95% of the iodine has been absorbed. This gives the flexibility of having normal conditions all the time, accidental conditions (blower slowdown) right from the beginning, or accidental conditions only after 95% of the iodine is already loaded on the adsorbers.
8. The isotopes constants a_i, g_i, and λ_i appearing in Eq. (17).

The CHART code can be used in three ways:

CHART A - Used to compare results with output from ENIS code for the "Infinite Slab" model. By inserting an arbitrary large value (like 10^5) for the heat capacity of the cooling gas the code will not allow the temperature of the gas T_g to change.

CHART B - Used for calculations with the "Infinite Slab" and the "3-dimensional slab" models. True heat capacity for the cooling gas must be used.

CHART C - Used with the "3-dimensional unit" model. The code will define the charcoal slab and the metal structure around it. Actual cooling gas temperature will then be taken into account. A trial run has been run for the "3-dimensional unit" model and it seems to be working well. However, because of the large number of nodes and their small size, the time increment required for stability becomes very small (about 3.0×10^{-3} min), and the computer-time to actual-time ratio became very large (about 26). Even by use of the acceleration capabilities of the modified method

method (see Ref. 10) a complete run of this case requires an inordinate amount of time. Some modifications are needed to reduce the length of such a calculation.

V. APPLICATION OF COMPUTER CODES

To illustrate the application of the codes one must first place values on such critical parameters as heat generation, heat transfer coefficients, and charcoal characteristics and then define typical reactor systems for study. Examples will be given to illustrate the applicability of the codes to recirculating adsorber systems similar to those utilized with power reactors of the pressurized-water type and also to once-through adsorber systems of the type utilized by power reactors of the boiling-water types and by AEC reactors using the negative pressure containment concept.

Heat Generation by Decay of Radioiodine

The equilibrium quantities of the various isotopes of iodine contained in the fuel of a power reactor are substantial. When significant quantities of these isotopes are assumed to be adsorbed on the charcoal surfaces then the heating load is considerable. This heat is generated as a result of the absorption by the charcoal of the kinetic energy of the products of radioactive decay: the beta particles and the gamma photons. The amount of heat produced will, of course, be a function of the quantity of iodine isotopes which have been adsorbed and this quantity will depend upon the quantity available in the fuel for release at the time of the accident.

Isotopes of iodine are formed as a result of fission of ^{235}U as well as through the decay of isotopes of tellurium; depending upon the specific application both modes of production may have to be considered. Both iodine and tellurium are released from molten fuel to about the same extent[12] but the tellurium may subsequently be adsorbed or react in such a way as will preclude all of the iodine produced by its decay from reaching the charcoal. Consequently, when considering the heat generation in charcoal

adsorbers a decision must be made as to what fraction of the iodine (mainly ^{134}I) produced by decay of tellurium (after reactor shutdown) should be included as part of the heating source. An example of the magnitude of this effect is included in the example subsection which follows.

Equilibrium quantities of the isotopes of iodine at time of reactor shutdown and at various times of decay thereafter were calculated and the results appear in Table 1; in this listing the amounts of iodine produced by decay of tellurium isotopes after reactor shutdown were included. However, in the examples which follow we did not consider the "growing-in" of iodine after shutdown and assumed that the amounts of radioiodine isotopes present at reactor shutdown represent the maximum quantity of heat producing material available for deposit on the charcoal adsorbers. The fission product loading is reduced by limited release of iodine from the fuel, by plateout, and by radiodecay as the isotopes travel from the fuel to the adsorbers; a significant amount of time and plateout could be involved in this travel.

It is most difficult to define the exact quantity of radioiodine that will be released from the fuel in an accident situation and the fraction of that amount which will plateout on surfaces; therefore it is the custom to assume, for a safety analysis, that 25% of the fuel inventory of the iodine will appear in the containment for adsorption onto the charcoal and further, that the isotopes travel from the fuel without decay. Decay heating is allowed to start when the isotope is adsorbed on the charcoal surface.

The assumption concerning decay time places a large burden on the adsorbers since the iodine inventory is reduced very rapidly over the first few minutes following shutdown. Various estimates ranging from tens of minutes to several hours can be made of the length of time from shutdown until arrival of iodine at the adsorber. In the examples that follow, some allowances will be made for decay prior to adsorption on the charcoal. The effect of decay on the iodine quantity values is also illustrated in Table 1 where decay up to 200 minutes is considered.

In Table 2, the curies of iodine at shutdown have been converted into watts of decay power per Mw(t) of reactor power; values are contained

Table 1. Radioactive Iodines Produced in a Reactor, Curies/Mw(t) of Reactor Power

Nuclide Radioactivity, Curies/Mw(t) of Reactor Power

Isotope	Shutdown	20 min	40 min	60 min	80 min	100 min
I-128	3.50E 02*	2.01E 02	1.15E 02	6.62E 01	3.80E 01	2.18E 01
I-129	1.24E-03**	1.24E-03	1.24E-03	1.24E-03	1.24E-03	1.24E-03
I-130m	3.95E 02	8.76E 01	1.94E 01	4.30E 00	9.53E-01	2.11E-01
I-130	1.14E 03	1.12E 03	1.10E 03	1.08E 03	1.06E 03	1.04E 03
I-131	2.88E 04	2.88E 04	2.88E 04	2.88E 04	2.88E 04	2.88E 04
I-132	4.10E 04	4.08E 04	4.07E 04	4.06E 04	4.05E 04	4.04E 04
I-133	5.37E 04	5.37E 04	5.37E 04	5.31E 04	5.27E 04	5.23E 04
I-134	6.08E 04	5.72E 04	5.16E 04	4.51E 04	3.85E 04	3.24E 04
I-135	4.77E 04	4.62E 04	4.46E 04	4.31E 04	4.16E 04	4.02E 04
I-136	2.02E 04	8.99E-01	3.99E-05	1.77E-09	7.89E-14	0.00
I-137	5.21E 04	1.02E-011	0.00	0.00	0.00	0.00
I-138	5.05E 04	0.00	0.00	0.00	0.00	0.00
I-139	4.14E 04	0.00	0.00	0.00	0.00	0.00
Total	3.98E 05	2.28E 05	2.20E 05	2.12E 05	2.03E 05	1.95E 05

* In all tables this shorthand method of density powers of ten will be used; this value is read as 3.5×10^2 or 350.

** This value is read as 1.24×10^{-3} or 0.00124.

Table 1, Continued

Isotope	Shutdown	120 min	140 min	160 min	180 min	200 min
I-128	3.50E 02*	1.24E 01	7.20E 00	4.14E 00	2.38E 00	1.36E 00
I-129	1.24E-03**	1.24E-03	1.24E-02	1.24E-03	1.24E-03	1.24E-03
I-130m	3.95E 02	4.68E-02	1.00E 03	2.30E-03	5.09E-04	1.13E-04
I-130	1.14E 03	1.02E 03	1.04E 03	9.83E 02	9.65E 02	9.47E 02
I-131	2.88E 04	2.87E 04	2.87E 04	2.87E 04	2.87E 04	2.86E 04
I-132	4.10E 04	4.03E 04	4.01E 04	4.00E 04	3.99E 04	3.98E 04
I-133	5.37E 04	5.18E 04	5.14E 04	5.09E 04	5.04E 04	4.98E 04
I-134	6.08E 04	2.70E 04	2.2E 04	1.81E 04	1.47E 04	1.18E 04
I-135	4.77E 04	3.89E 04	3.76E 04	3.63E 04	3.51E 04	3.39E 04
I-136	2.02E 04	0.00	0.00	0.00	0.00	0.00
I-137	5.21E 04	0.00	0.00	0.00	0.00	0.00
I-138	5.05E 04	0.00	0.00	0.00	0.00	0.00
I-139	4.14E 04	0.00	0.00	0.00	0.00	0.00
Total	3.98E 05	1.88E 05	1.81E 05	1.75E 05	1.75E 05	1.65E 05

Table 2. Constants for Iodine Isotopes Produced in a Reactor

Iodine Isotope	Decay Constant (min^{-1})	Fraction of Decay Heat Due to		Decay Power (watts/Mw(t) of Reactor Power at Shutdown		
		Beta	Gamma	Discharge Total	From Beta	From Gamma
I-128	2.77E-02	0.827	0.173	1.99E 00	1.65E 00	3.40E-01
I-129	7.74E-14	1	0.0	5.37E-07	5.37E-07	
I-130m	7.56E-02	1	0.0	2.34E-01	2.34E-01	
I-130	9.30E-04	0.220	0.780	9.97E 00	2.19E 00	7.78E 00
I-131	5.98E-05	0.426	0.574	1.18E 02	5.03E 01	6.77E 01
I-132	5.02E-03	0.220	0.780	6.55E 02	1.44E 02	5.11E 02
I-133	5.50E-04	0.490	0.510	3.50E 02	1.72E 02	1.79E 02
I-134	1.31E-02	0.186	0.814	1.18E 03	2.19E 02	9.61E 02
I-135	1.72E-03	0.160	0.840	6.45E 02	1.03E 02	5.42E 02
I-136	5.01E-01	0.480	0.520	5.10E 02	2.45E 02	2.65E 02
I-137	1.84E-00	1	0.0	5.43E 01	5.43E 01	
I-138	7.02E-00	1	0.0	1.02E 03	1.02E 03	
I-139	2.08E-01	1	0.0	4.91E 02	4.91E 02	
				5.04E 03	2.50E 03	2.53E 03

which represent contributions from both beta and gamma emissions; the entire beta and gamma energy is assumed to be converted into heat. The effect of decay time on decay heating is illustrated in Fig. 6 which includes iodine produced by decay of tellurium.

Charcoal Parameters

As noted in Section IV values for certain charcoal parameters or characteristics are needed to perform heat transfer calculations in adsorber units. One must know values for characteristics such as shape, porosity, sphericity and mean diameter of the particles. The porosity in this case is not concerned with internal cavities of the charcoal, only with the void space between the particles when in packed array; porosity is defined as volume of void space divided by the total volume of the container. Sphericity is defined as the surface area of a sphere having a volume equal to that of the particle divided by the surface area of the particle. The bed porosity for 8 x 16 mesh (U.S.) charcoal particles will be somewhere between 0.38 and 0.45 while the sphericity will be between 0.70 and 0.80.

On examination of a sample batch of charcoal, the particles seem to be prismatic in form with a.a.2a as a fairly representative shape. This shape has a sphericity of 0.767. This particular sample has a porosity estimated to be about 0.43. This figure will probably vary no more than 10% from batch to batch.

One cubic centimeter was found to contain 278 particles. With a void fraction of porosity of 0.43 this results in a particle volume of 0.002050 cm^3 or 0.0001251 $in.^3$. One particle plus the void or interstitial space occupies 0.0002195 $in.^3$. The mean diameter, which is the diameter of a sphere having same volume as an average particle, is equal then to 0.06205 in., which compares favorably with a screen analysis, indicating an average particle diameter of 0.0504 in. If the particle has a prismatic shape of a.a.2a as previously assumed, the volume is $2a^3$ and a = 0.03970 in. The total area of this representative particle is $10a^2$ or 0.01576 $in.^2$. The effective heat transfer area in the bed will be of course less than this. The above characteristics will be used in any calculation made in this report.

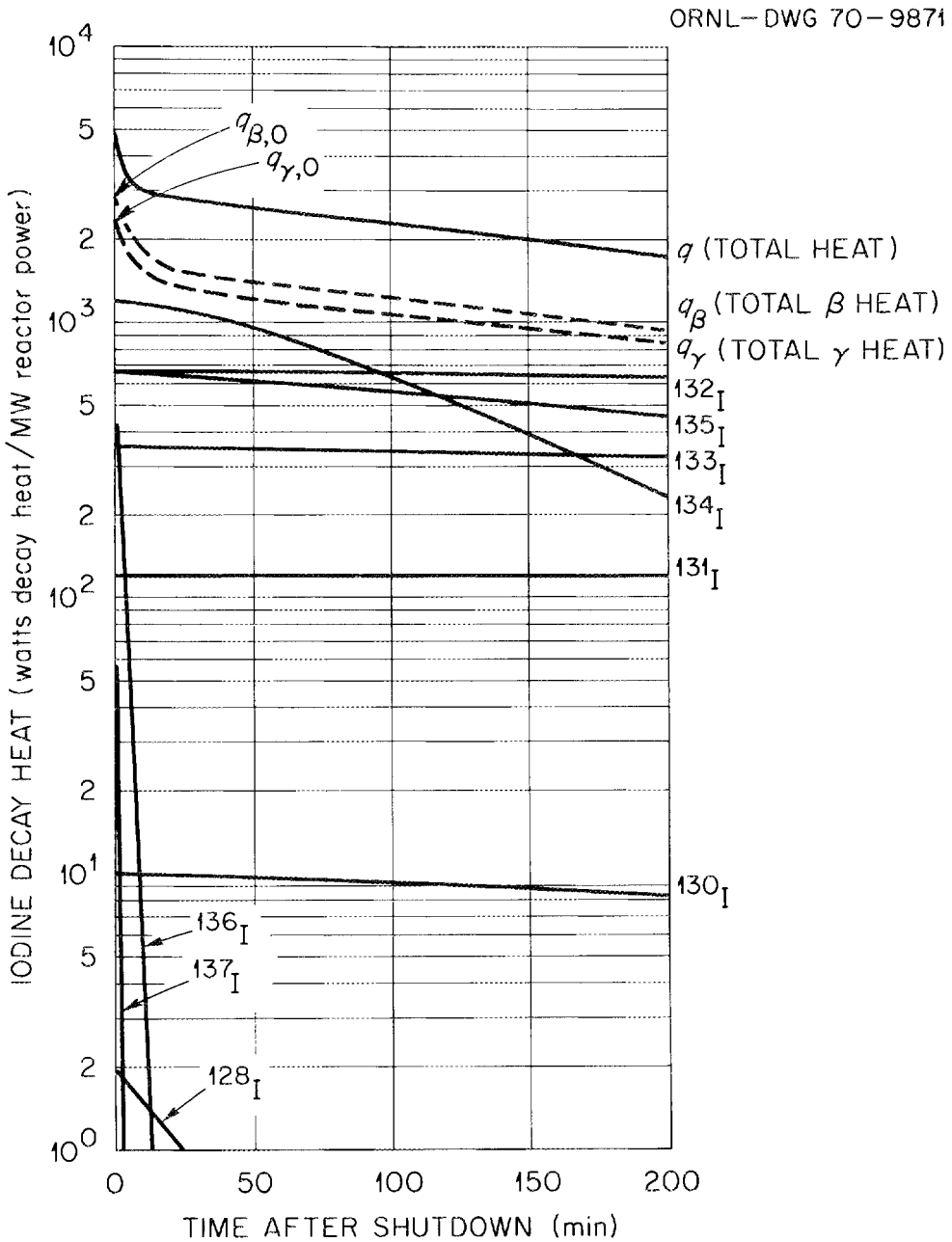

Figure 6. Fission Product Iodine Decay Heat as a Function of Time After Shutdown.

The physical properties of a charcoal bed are by no means a constant value. Each property depends on several factors. The apparent density of a charcoal bed is affected by the amount of moisture adsorbed and the method used in packing the bed. The thermal conductivity of charcoal beds is also subject to variations. It is a function of the temperature of the gas which fills the void between the grains and probably also of grain size. The greatest variation in a property is exhibited when measuring the heat capacity (Cp) of a charcoal bed over a range of temperatures. As moisture and other adsorbed gases are desorbed they act as a heat sink and thus cause a large increase in the heat capacity while this is taking place. Heat capacity and thermal conductivity have been studied in the laboratory and will be reported in a separate report.

In the examples which follow, the following values have been assumed:

Heat capacity = Cp = 0.2 Btu/lb-°F

Density = ρ = 35 lb/ft^3 = 2.0255×10^{-2} lb/in.^{3}

Conductivity k = 0.12 Btu/hr-ft-°F = 1.6667×10^{-4} Btu/in.-min-°F.

Volumetric Heat Transfer Coefficient

Equation (19) was given previously to relate H (the volumetric heat transfer coefficient) with h (the film heat transfer coefficient from the charcoal particle to the flowing gas) and Eq. (20) was given to aid in estimating values of h; the needed values of parameters have now been specified and a value for H can be estimated.

Using the characteristics given in the above subsection and assuming that about 80% of the charcoal surface area is available for heat transfer we get from Eq. (19):

$$H = (0.8)(1 - 0.43)\left(\frac{0.01576}{0.0001251}\right)(12)h$$

$$H = 689.4\ h \text{ Btu/hr-ft}^3\text{-°F} \tag{27}$$

From the reported correlation[9] we get values of 0.272 and 0.341 for E and m assuming d = 0.43; then expressing G as 60 ρV_g where V_g is in ft/min and using the properties of the adsorber unit and gas we get,

$$h = 1.0887\ V_g^{0.66} \text{ Btu/hr-ft}^2\text{-°F} \tag{28}$$

Substituting into Eq. (27) we get

$$H = 750.55\ V_g^{0.66}\ \text{Btu/hr-ft}^3\text{-°F}$$

or

$$H = 0.00724\ V_g^{0.66}\ \text{Btu/min-in.}^3\text{-°F.} \qquad (29)$$

Equation (29) was directly incorporated into the computer code for obtaining the volumetric heat transfer coefficient for each specified gas velocity.

Examples of Code Applications

As noted earlier, in order to illustrate the application of the codes one must first define a typical reactor system and then place numerical values on the various input parameters. The following examples are offered.

The following reactor system was defined for the express purpose of illustrating the applicability of the computer code. While the assumed system is similar to current pressurized-water reactors no effort was made to define a particular reactor: reactor power, 3077 Mw(t); volume of containment, $1.14 \times 10^6 ft^3$; face area of charcoal adsorber, 2800 ft^2; charcoal thickness, 2 inches; superficial air velocity through charcoal, as specified.

Example 1 - As discussed earlier, much of the early work was accomplished with the ENIS code which did not allow the temperature of the flowing air to change; the CHART series of codes was developed to handle a temperature rise in the flowing gas. CHART-A was so defined as to compare with the limitations of ENIS to allow a comparison to be made and to validate the assumptions made in the CHART series. Table 3 compares the output for ENIS, CHART-A, and CHART-B for an identical adsorber system. It is assumed that 25% of the iodine inventory is passed from the reactor core to the charcoal adsorber with 10 minutes decay and then instantly dispersed over the charcoal before additional decay is allowed; the sequence is referred to as "instant loading." The time values in the table refer to time after the iodine has been loaded onto the charcoal and not time from reactor shutdown. It is noted that temperature rise in the flowing air is an important consideration especially at the low flow rates. All of the following examples were done with the CHART-B code.

Table 3. Comparison of Temperature Rise as Calculated for Charcoal Adsorber by Three Computer Codes

		Temperature Rise in Charcoal Adsorber (°F Above Ambient)								
		Inlet Face			Middle			Exit Face		
Time (min.)		Code 1	2	3	Code 1	2	3	Code 1	2	3
Air velocity 20 ft/min	0	8.5	9.2	23.0	1.2	1.2	45.2	1.1	1.1	30.7
	10	8.1	8.8	22.2	1.1	1.1	62.9	1.1	1.1	90.8
	20	7.6	8.2	20.9	1.0	1.0	59.0	1.0	1.0	85.3
	40	6.8	7.3	18.6	0.9	0.9	52.5	0.9	0.9	75.6
	80	5.6	6.2	15.2	0.7	0.8	42.8	0.7	0.7	61.4
Air velocity 40 ft/min	0	5.7	6.3	11.1	0.7	0.7	32.1	0.7	0.7	36.6
	10	5.5	6.0	10.5	0.7	0.7	30.9	0.7	0.7	45.3
	20	5.1	5.6	9.7	0.7	0.7	29.0	0.6	0.6	42.5
	40	4.6	5.0	8.8	0.6	0.6	25.8	0.6	0.6	37.7
	80	3.8	4.1	7.2	0.5	0.5	21.1	0.5	0.5	30.0

Code 1: ENIS code, which is an analytical solution of Eq. (23); temperature of flowing air, t_g, constant.
Code 2: CHART A: compares with ENIS; t_g constant.
Code 3: CHART B: allows t_g to vary.

Example 2 - It is assumed that 25% of the iodine inventory is passed from the core to the charcoal adsorber with 10 minutes decay and then instantly dispersed over the charcoal before additional decay is allowed; this sequence is referred to as "instant loading." Figure 7 shows the maximum charcoal temperature as a function of time as computed by the CHART-B code for two air velocities through the charcoal mass. The time values on this graph refer to time after the iodine has been loaded onto the charcoal and not time from shutdown; the temperature values refer to temperature rise above the assumed starting temperature of the charcoal. At an air velocity of 4 ft/min the maximum temperature rise was approximately 380°F above the starting temperature, and this occurred at about 36 minutes after iodine loading; at a velocity of 20 ft/min the heat transfer is much greater and the maximum temperature rise was only about 90°F at about 8 minutes. It may be noted that the air flow through charcoal is normally about 40 ft/min or greater and further that the ignition point of charcoals normally in use exceed 600°F.

Example 3 - In recirculating adsorber systems the iodine loading will be more gradual than assumed in Example 1. Using Eq. (16), the loading characteristics for various air flows were computed and are illustrated in Fig. 8. This sequence is referred to as "gradual loading." As the air flow rate increases two effects are noted. First the factor in the computer code which controls the loading rate, allows the heat generation rate to increase because iodine is being removed from the containment volume and deposited on the charcoal with less decay. At the same time, the greater air flow increases the heat removal rate and tends to limit the temperature rise. In Fig. 9 the maximum temperature in the charcoal adsorber is plotted against time for air velocities of 2, 4, 10, and 20 ft/min.

Comparison of the effects of "instant" vs "gradual iodine loading" for air velocities of 4 and 20 ft/min may be made with the aid of Fig. 10. Gradual loading lowers the maximum temperature rise by 210°F at 4 ft/min air velocity.

Example 4 - The first two examples demonstrate that air velocity and the schedule of iodine loading are very important parameters. This infers that the most hazardous situation might be one in which the loading

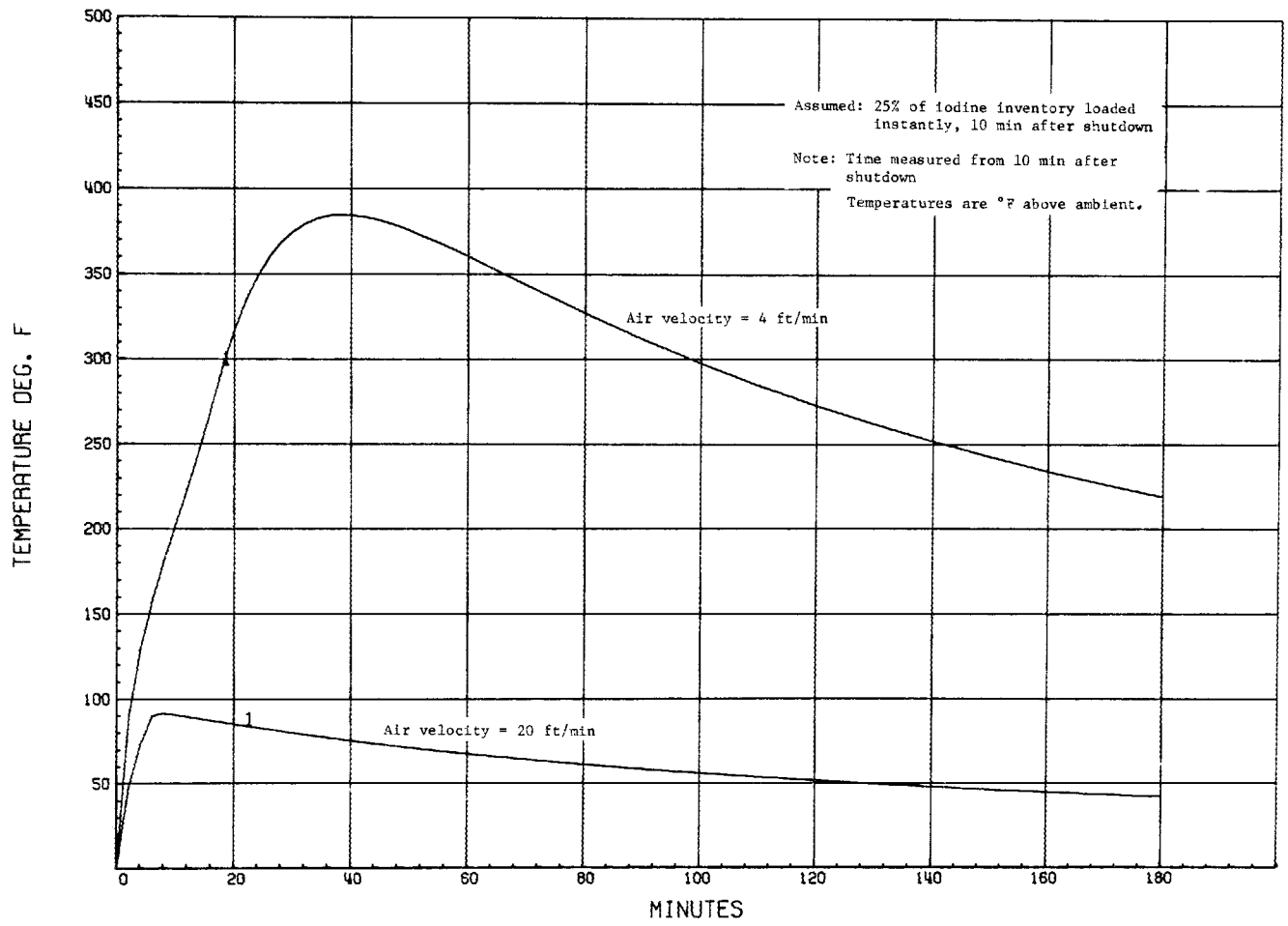

Figure 7. Maximum Charcoal Temperature vs Time for Instant Loading 10 Minutes after Shutdown.

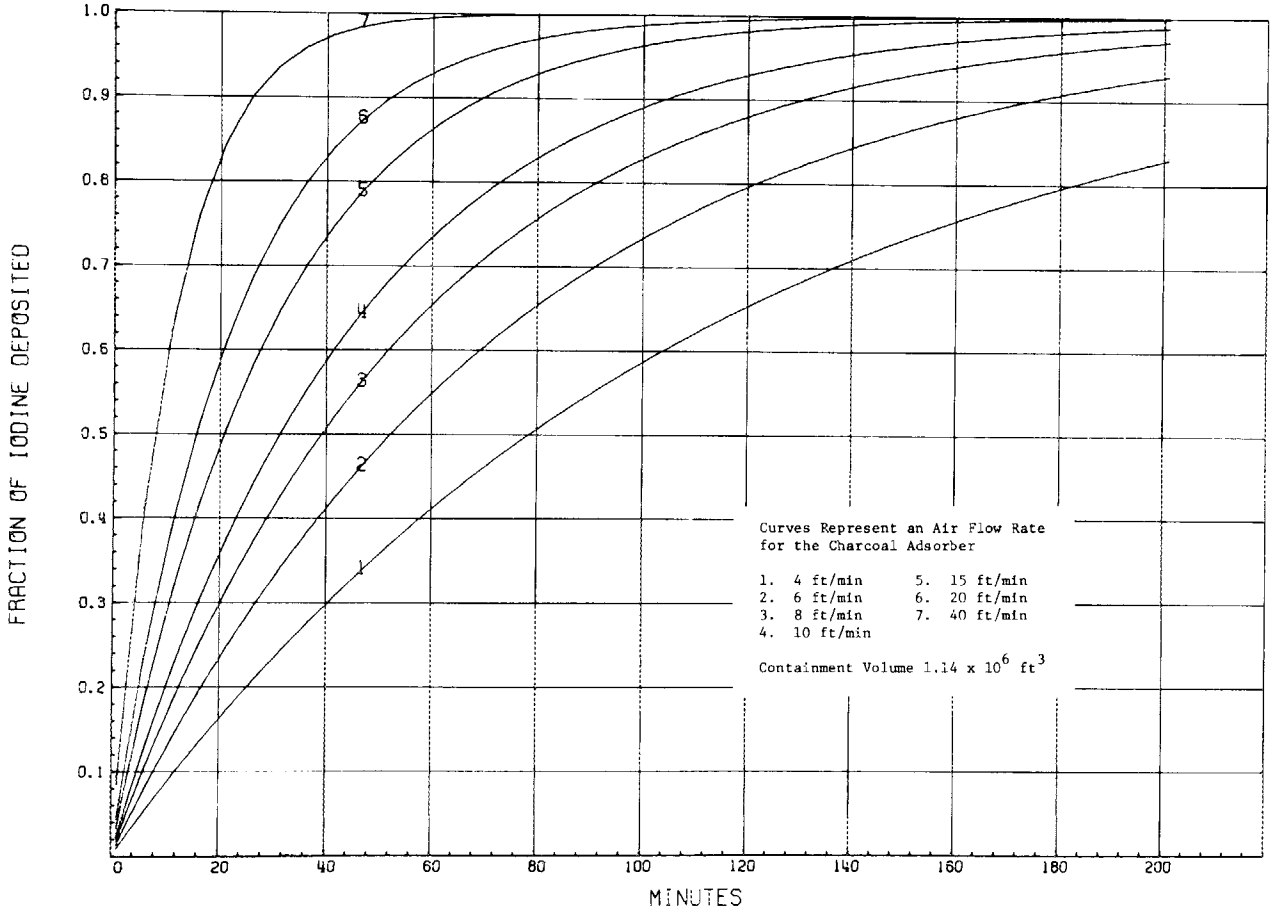

Figure 8. Fraction of Containment Iodine Deposited on Charcoal vs Time.

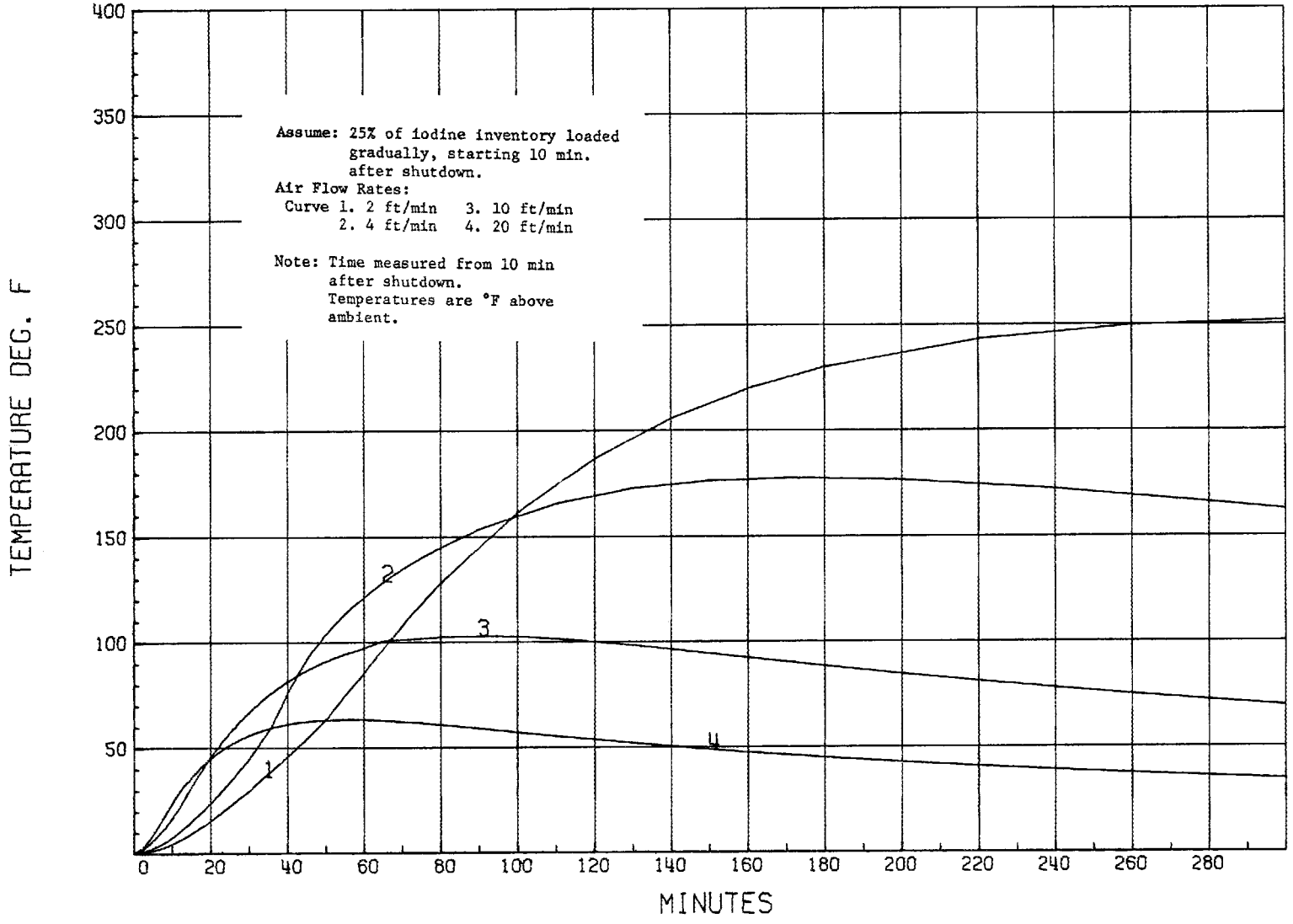

Figure 9. Maximum Charcoal Temperature vs Time for Gradual Loading.

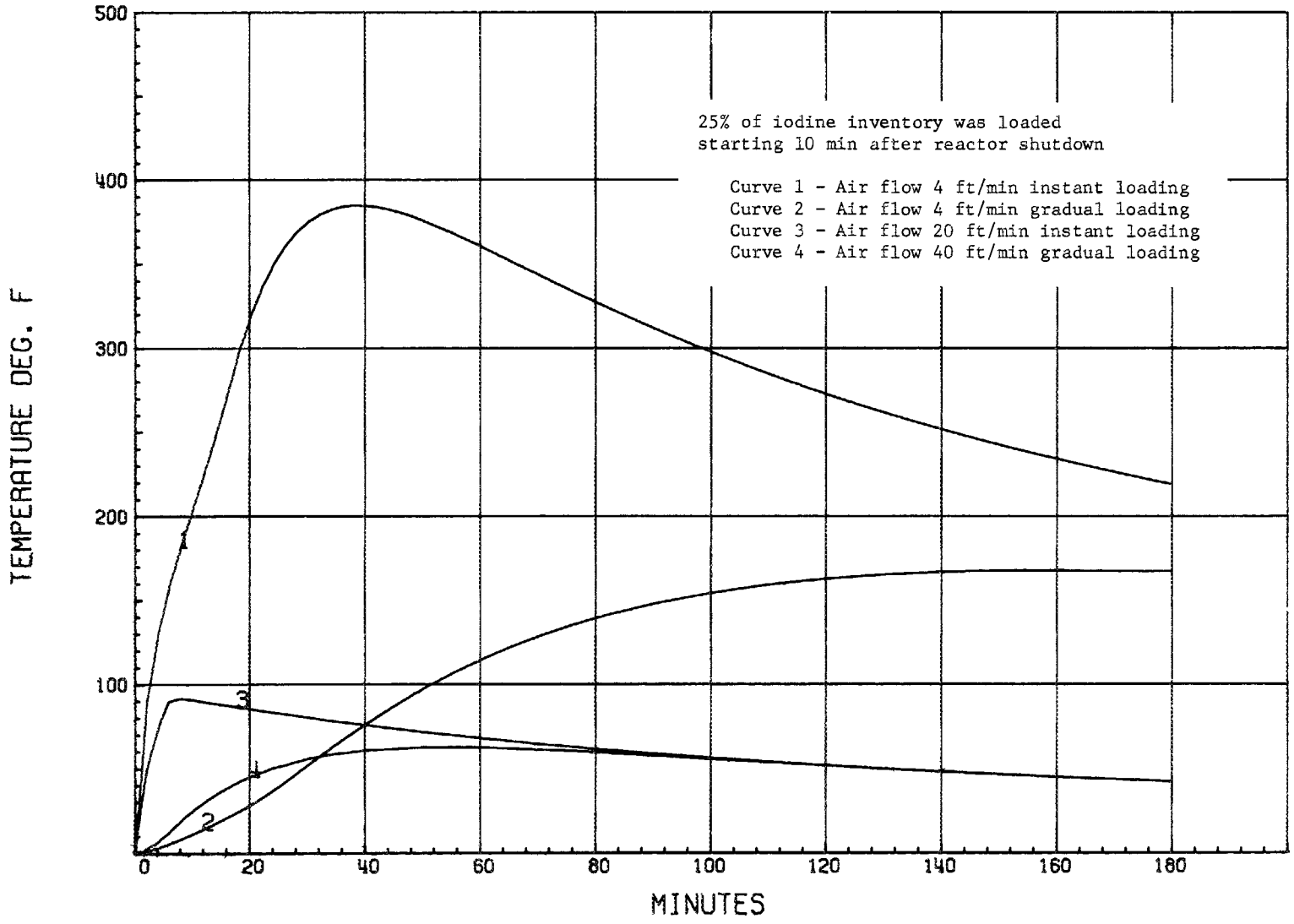

Figure 10. Temperature (max) of Charcoal vs Time - Instant and Gradual Loading.

of iodine occurred quickly and in which a low flow condition developed as a result of partial blower failure after iodine loading. Figure 11 indicates how the maximum temperature might change in that situation. Specifically the temperatures listed were calculated assuming a normal flow (40 ft/min) for long enough to load 95% of the iodine which would eventually be loaded and then assuming a reduction to a flow of 4 ft/min after that. As can be seen, the maximum temperature rise was not extreme.

Example 5 - The volumetric heat transfer coefficient (H) is calculated for each air flow rate entered in the computer code and the result is applied to determine the transfer of heat from the charcoal to the air. The computer code was used to compare the temperature distribution in the charcoal, using the (H) value calculated by the equations considered to be most representative in lieu of measured values, and using an (H) value reduced by a factor of 10. These two values of (H) were used for 2,4, and 10 ft/min. Figure 12 is a plot of the maximum temperature vs time under these conditions. As expected there is practically no difference in the two cases for low air flow because the capacity of the air for heat is quickly reached and the air temperature becomes the controlling factor. At increased air velocities the effect of (H) becomes more apparent. As noted earlier in this report, values of (H) were measured in the lab and will be reported in a future report.

Example 6 - The previous examples have utilized the maximum temperature irrespective of the location within the charcoal mass. If the charcoal slab is subdivided as in Fig. 13 then temperature can be calculated at desired locations by use of CHART-B. Figure 13 illustrates maximum temperature at the center and the corner of a charcoal slab.

Example 7 - This calculation illustrates the surface temperature profile of a charcoal slab along the lines 1, 2, 3, 4, and 5, as illustrated in Fig. 14. It is noted that temperature profiles are comparable to within 3 inches of edge of charcoal slab.

Example 8 - In this calculation we apply CHART-B to a once-through charcoal adsorber system. For purposes of this illustration a hypothetical reactor and adsorber system was defined as: power level, 350 Mw(t); iodine release, 25% of inventory with 90% as I_2 and 10% as CH_3I; transit time between core and charcoal, 10 minutes; size of adsorber system,

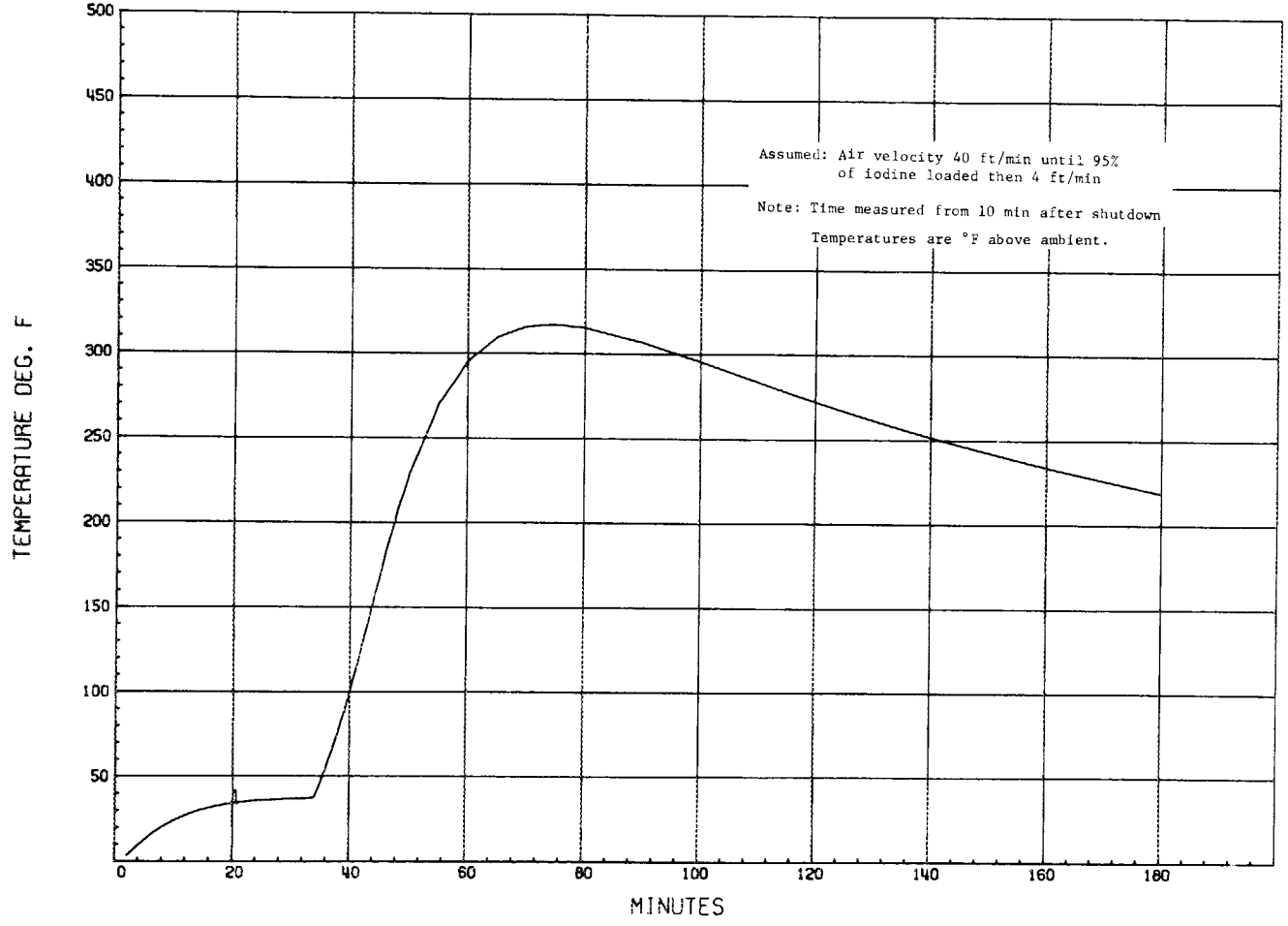

Figure 11. Maximum Charcoal Temperature vs Time for High Air Flow Followed by Low Air Flow.

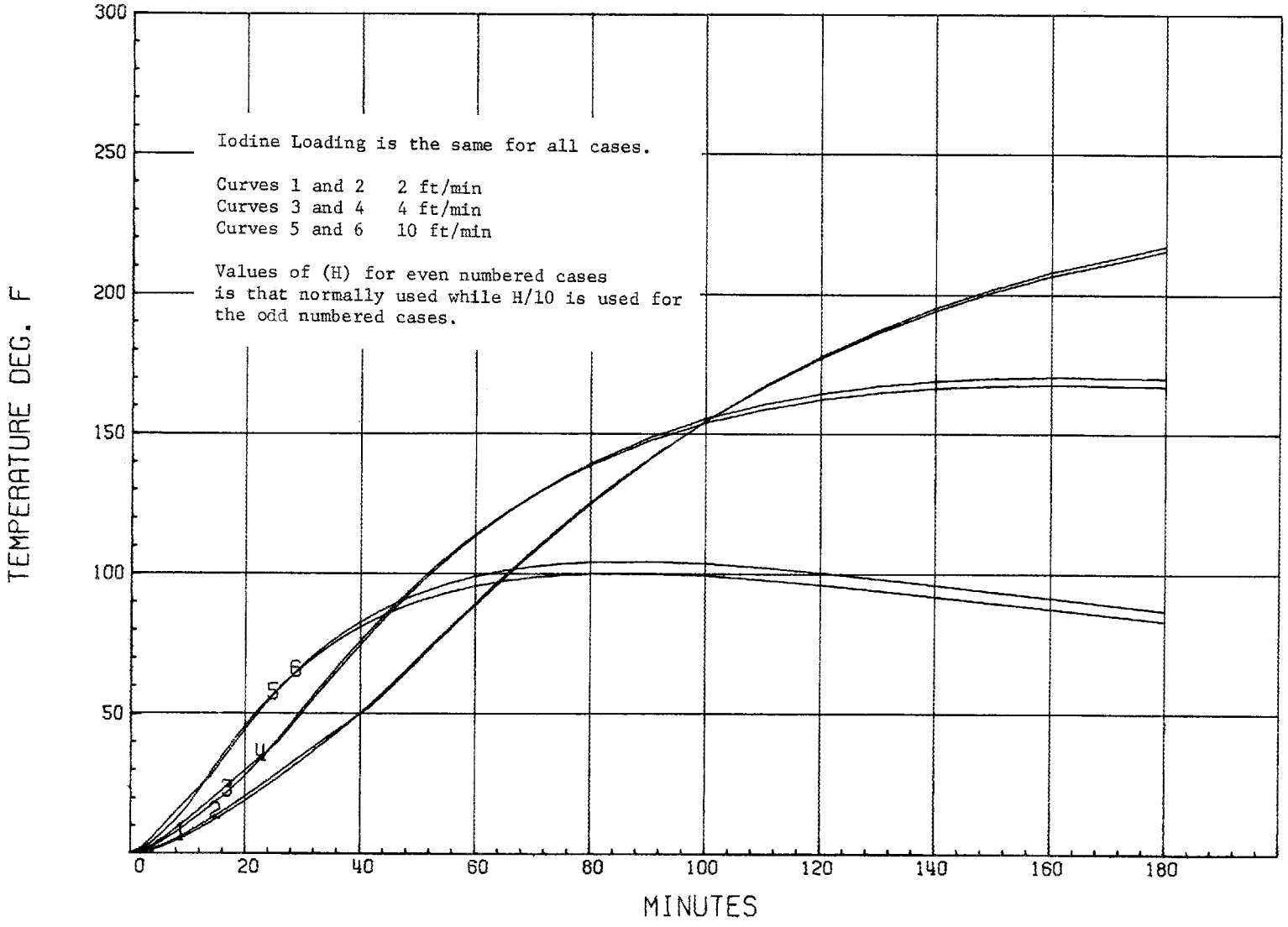

Figure 12. Temperature (Max.) of Charcoal vs Time-Effect of Change (H).

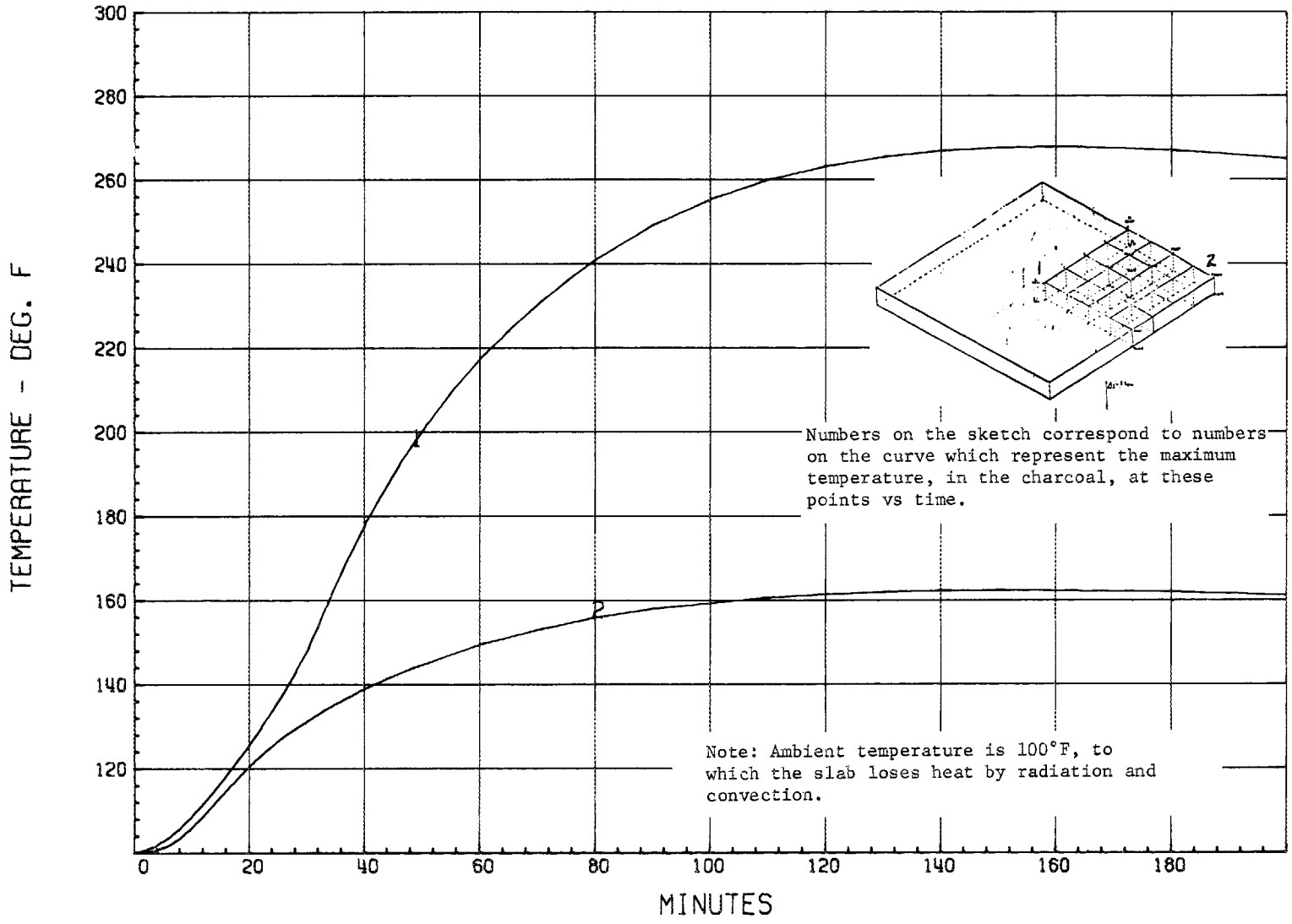

Figure 13. 3-Dimensional Slab Calculation, Maximum Temperature vs Time.

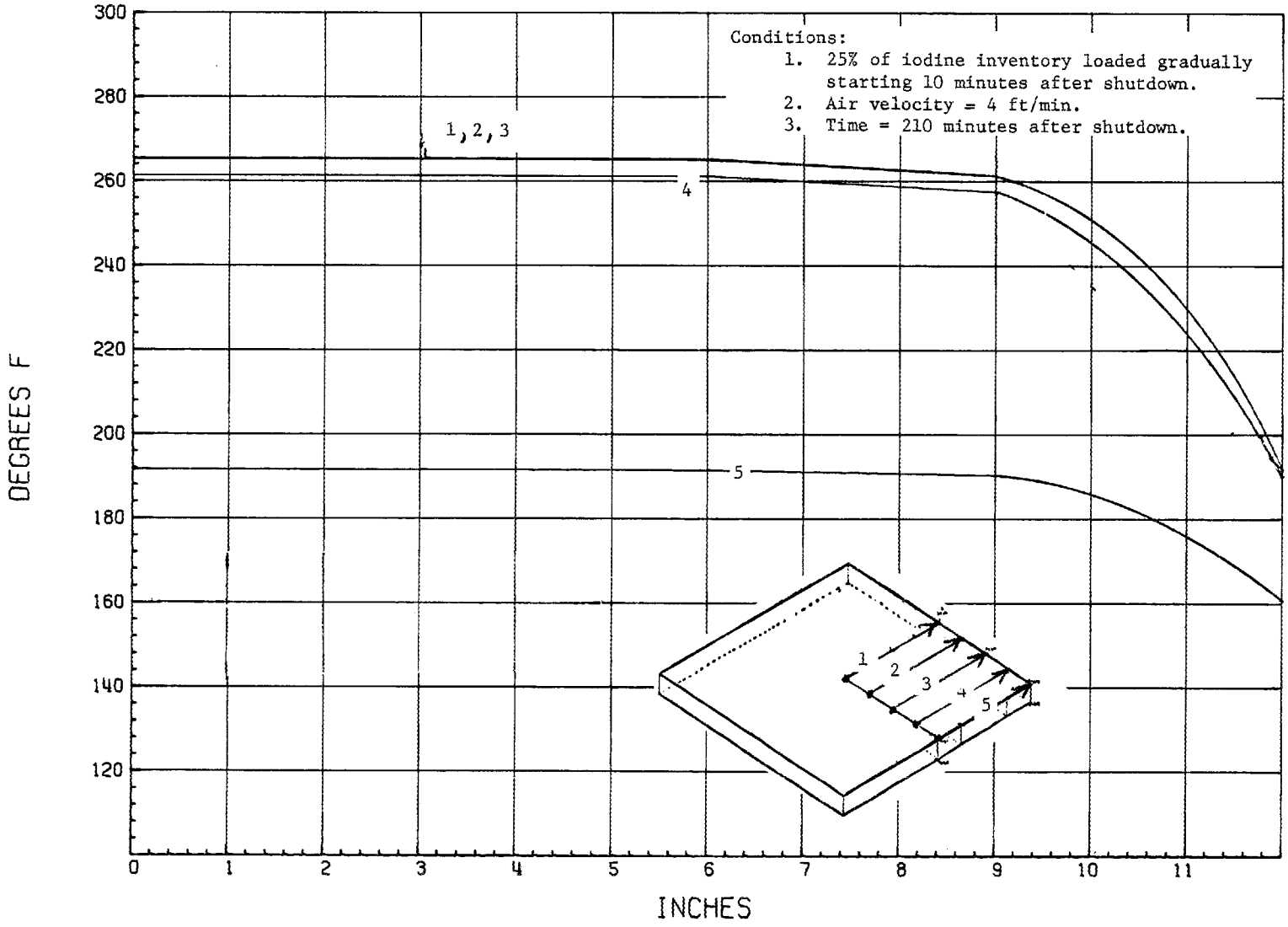

Figure 14. Surface Temperature of Charcoal Slab.

600 ft^2 face area by 2 inches depth; normal linear velocity of air, 40 ft/min; abnormal linear velocities of 20 and 4 ft/min; efficiency of charcoal, 99%. The temperature response of the charcoal under instant loading conditions is given in Fig. 15. The manner in which these calculations were made is detailed in Appendix D.

Example 9 - Calculations of the quantities of iodine available were made assuming (1) only the iodine released directly from the fuel reaches the charcoal or (2) all the iodine, including that produced by decay of tellurium after reactor shutdown, reaches the charcoal; this was accomplished through use of a computer code called ORIGEN[13]. Other assumptions include: (1) 25% of iodine inventory in a 3000 Mw(t) reactor reaches containment 10 minutes after shutdown, (2) iodine is deposited on 2800 ft^2 of charcoal adsorber (with a 2 inch depth of charcoal) at a rate such that 95% of the total iodine eventually deposited is deposited in about 100 minutes. The results are contained in Fig. 16. By including that iodine produced by decay of tellurium (after shutdown) the heating load at its maximum is increased by about 19%.

VI. COOLING THE CHARCOAL ADSORBER BY NATURAL AIR CONVECTION

A model reactor complex has been described earlier in this report and used for the development of computer codes to calculate the temperature distribution caused by the decay heat of the radioactive iodines adsorbed on the charcoal adsorbers. These calculations show that air flow rates as low as 4 ft/min can effectively remove the decay heat from charcoal adsorbers. The very important question that remains is the consequences of no forced air flow through the charcoal adsorbers. Can the natural means of heat transfer dissipate the decay heat through the air exit duct and the walls of the adsorber? To answer this question some preliminary calculations were made to determine the rate that heat can be dissipated from a model adsorber when the charcoal is at a temperature of 475°F. A further consideration is given to enhancing the natural flow of air through the charcoal by adding a stack near the exit of the charcoal adsorber.

In order to check the possibility of cooling the charcoal adsorbers by natural convection some rough calculations have been made for steady state conditions.

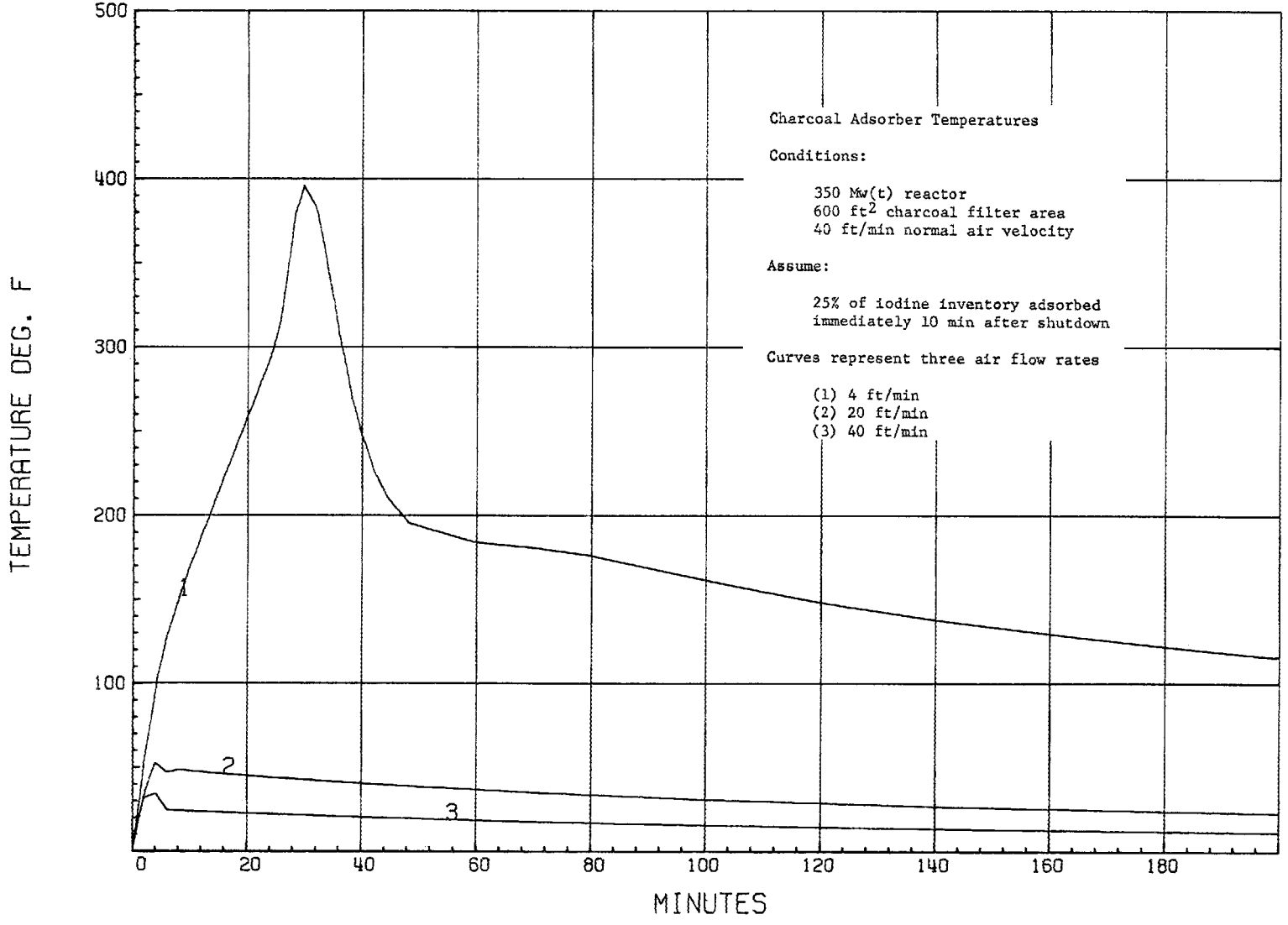

Figure 15. Maximum Temperature vs Time.

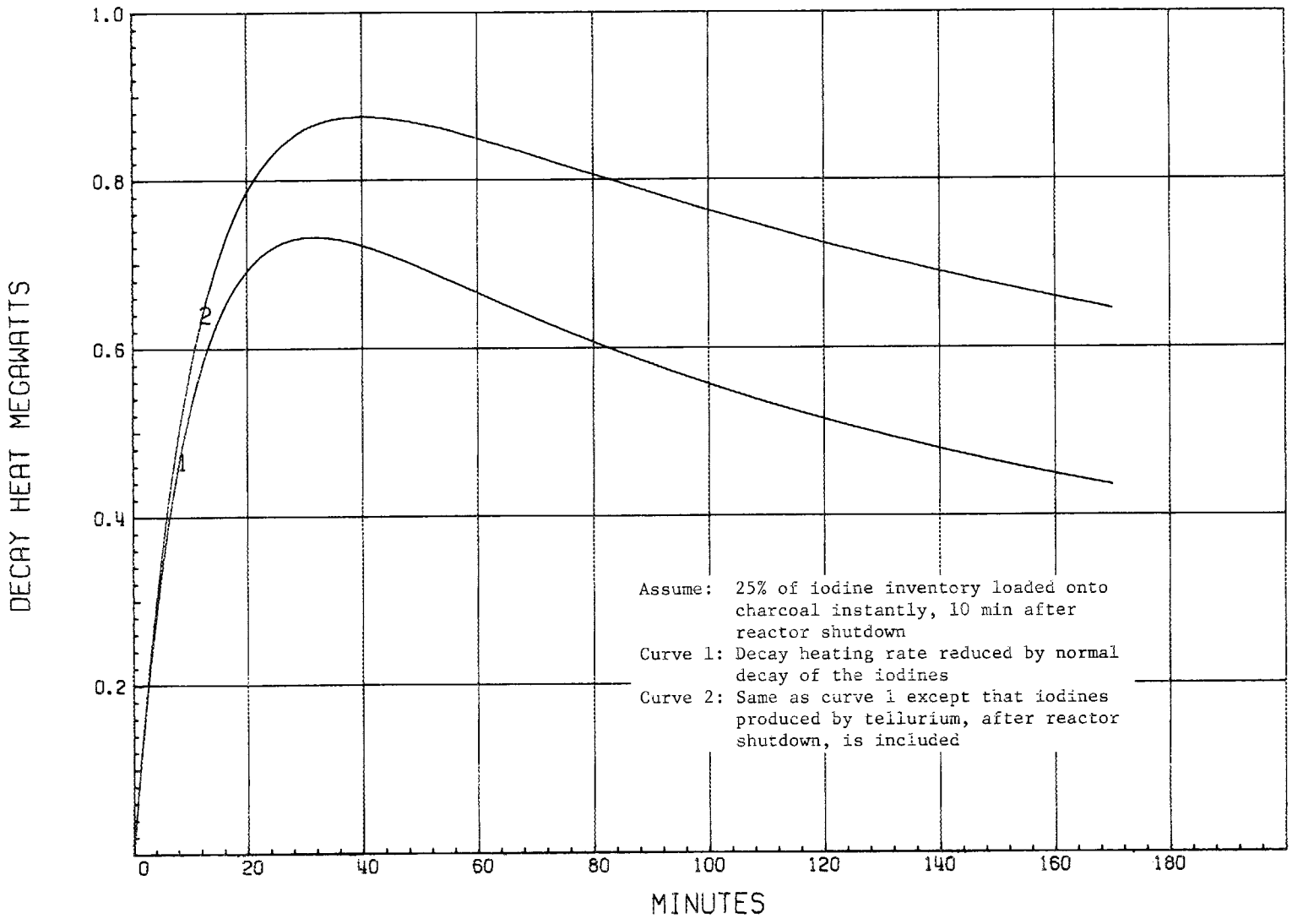

Figure 16. Decay Power of Fission Product Iodine vs Time from 3000 Mw(t) Reactor.

The driving force by natural convection is

$$\Delta P = Z(\rho_c - \rho_h) \tag{30}$$

where

ΔP = driving pressure in lb_f/ft^2

Z = elevation of unit

ρ_c = density of air at cold side (bottom of unit)

ρ_h = density of air at hot side (top of unit).

The driving pressure required on the pressure resistance through the bed can be calculated by

$$\Delta P = 2.8508 \times 10^{-5} \left(\frac{L\mu V_g F_f}{g_e D_p^2 F_{Re}}\right). \tag{31}$$

The correct gas velocity will be achieved by balancing the driving force with the pressure drop required. Equating Eqs. (30) and (31), we get then

$$V_g = \frac{g_c D_p^2 F_{Re} Z(\rho_c - \rho_h)}{2.8508 \times 10^{-5} L\mu F_f} \tag{32}$$

where

Z = distance separating the cold air and hot air - 6.75 ft

ρ_c = density of air at 100°F = 0.07087 lb/ft^3

ρ_h = density of air at exit conditions of 475°F = 0.0420 lb/ft^3

g_c = 32.17 ft/sec^2

$D_p = 0.00517^2 = 0.00002673\ ft^2$

F_{Re} = 48.0

L = total bed thickness = 18 x (2/12) = 3.0 ft

μ = 0.04594 lb/ft-hr

F_f = 1500.0

Substituting the above values in Eq. (32) gives for the natural gas velocity

V_g = 0.2626 ft/min = 15.76 ft/hr.

The heat transferred to the cooling air can be calculated by

$$q_g = WC_p(T_h - T_c) = V_g \rho A_b C_p (T_h - T_c). \tag{33}$$

To this, one can add the heat lost from the duct surface to the ambient atmosphere by natural convection and radiation as

$$q_w = CA_w(T_w - T_c)^{1.33} + \varepsilon A_w \sigma (T_w^4 - T_c^4) \tag{34}$$

where

W = rate of flow of air in lb/min

C_p = specific heat of air = 0.245 Btu/lb-°F

A_w = external surface of the duct around the adsorber = 40 ft^2

T_h = hot exit temperature of cooling air = 475°F

T_c = cold or ambient temperature = 560°R (100°F)

T_w = average temperature of the wall = 747°R (287°F)

ε = emissivity of wall surface = 0.5

C = empirical constant for natural convection = 0.221

σ = Steffan-Boltzmann constant = 0.173×10^{-8} Btu/hr-ft-°R^4.

It was assumed here that the ambient temperature is 100°F (which is an optimistic value) and that the exit temperature of the cooling air at the top is allowed to reach the temperature limit of 475°F. The adsorber container itself is assumed to contain three columns of adsorber units with 18 charcoal slabs in each column. The size of the duct around the adsorber is taken to be 81-1/2 in. high, 83-1/2 in. wide and 28 in. deep. This gives about 40 ft^2 of external surface area around the duct and 12 ft^2 flow area of the gas in vertical direction. Based on the above assumptions, we can have an estimate of the amount of cooling that can be expected by natural means and without using a stack.

The heat transferred to the air using Eq. (33) is then

$$q = WC_p\Delta T = V_g \rho A C_p \Delta T = 15.76\ (0.05644)(12)(0.245)(375) = 980 \text{ Btu/hr}$$

and the heat transferred to ambient air using Eq. (34) will be

$$q_w = 0.221 \times 40 \times 182^{1.333} + 0.5 \times 40 \times 0.173 \times 10^{-8}\ (742^4 - 560^4)$$

$$= 9101 + 7085 = 16{,}186 \text{ Btu/hr.}$$

So the total heat loss by natural means will be

$$q = q_g + q_w = 980 + 16{,}186 = 17{,}166 \text{ Btu/hr} = 5.03 \text{ Kw.}$$

The total maximum heat generation in the model adsorber for 27 charcoal trays was computed to be 56.5 Kw using the assumed reactor system. This means that even with optimistic assumptions the heat nominally assumed to be generated in the charcoal bed cannot be removed by normal air convection around the adsorber container.

Since only a small fraction of the total heat can be removed from the adsorber by natural convection, it might be desirable to increase the thermal buoyancy by adding an emergency stack to the system. The pressure loss through the system is the sum of the pressure drop through the ductwork, the bed and stack. If the emergency stack can be located close enough to the bed and an opening provided to the outside air, then the pressure drop in the ductwork can be ignored and the total ΔP will then be equal to the sum of the frictional resistances in the stack and in the bed plus 1-1/2 velocity heads based on the bed velocity plus 1-1/2 velocity heads based on the stack velocity.

A program was written in X-Tran for the Com-Share Computer called STACK which calculates the fraction of the maximum heat generated from the peak heat generation rate on a steady state basis for any given ambient temperature, stack height, and diameter. A listing of this program appears in Appendix E. Calculations are based on Eqs. (35) and (36). The results of this program are shown in Fig. 17 for ambient temperature of 100°F stack heights from 0 to 100 ft and stack diameters from 1.0 to 4.0 ft where the total maximum heat generation for the total adsorber is 732 Kw. Figure 18 gives the same data for ambient temperature of 240°F.

Results indicate that a stack 3 feet in diameter and 35 feet in height would control the heat generation under an assumed ambient temperature of 100°F; for an ambient temperature of 240°F the dimensions would be 4 feet in diameter and 70 feet in height.

VII. SUMMARY

In this report two major objectives have been pursued. One, to suggest a method which might be applied to do a thermal analysis of a charcoal adsorber and two, to provide calculational means to apply the analysis. Specifically, the points itemized below have been presented.

1. A description of an assumed reactor complex with the necessary details to place the charcoal adsorber of the system in context so it will be seen as part of the whole system while considering the likelihood of its becoming heated by the decay heat of the iodine.

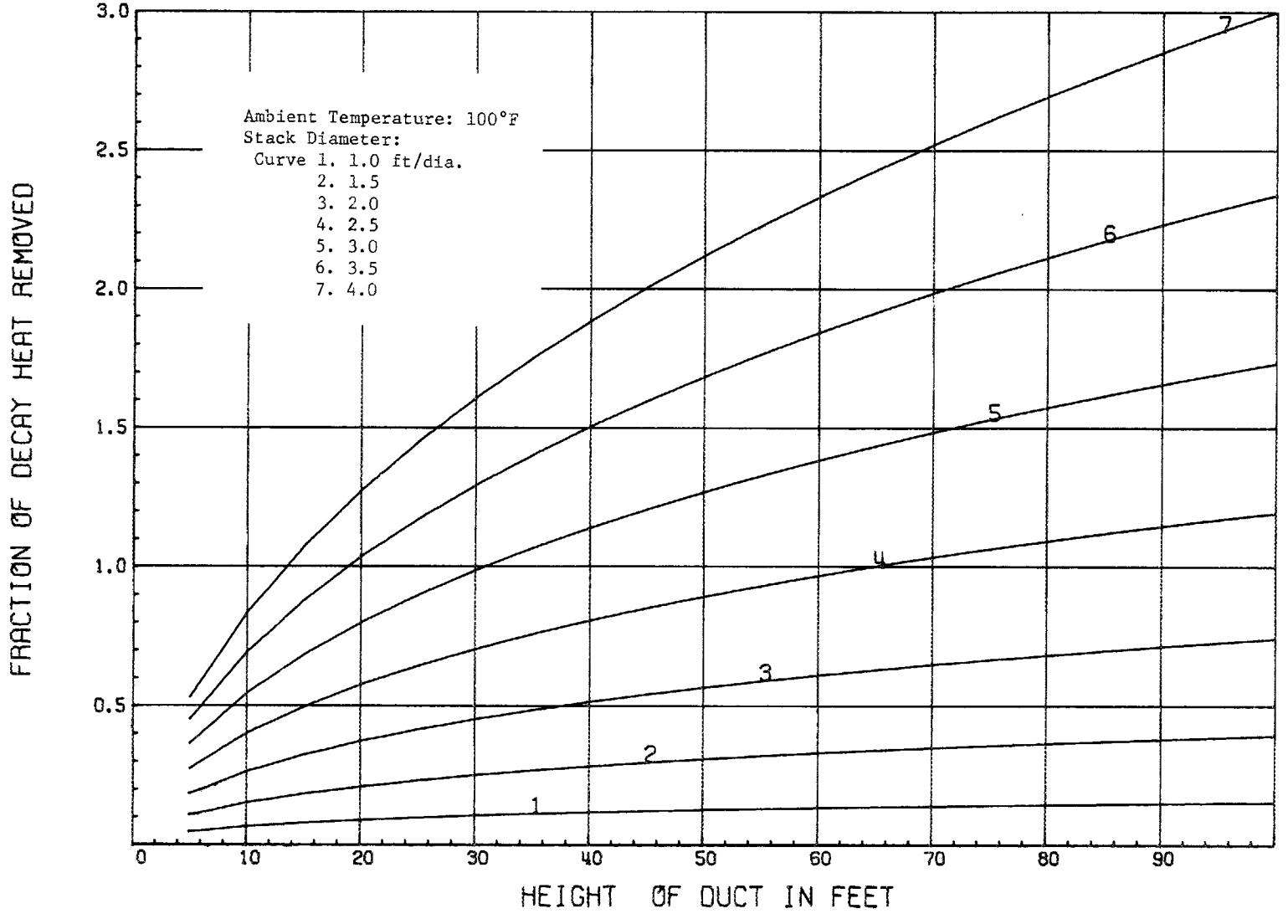

Figure 17. Fraction of Heat Removed vs Height of Stack.

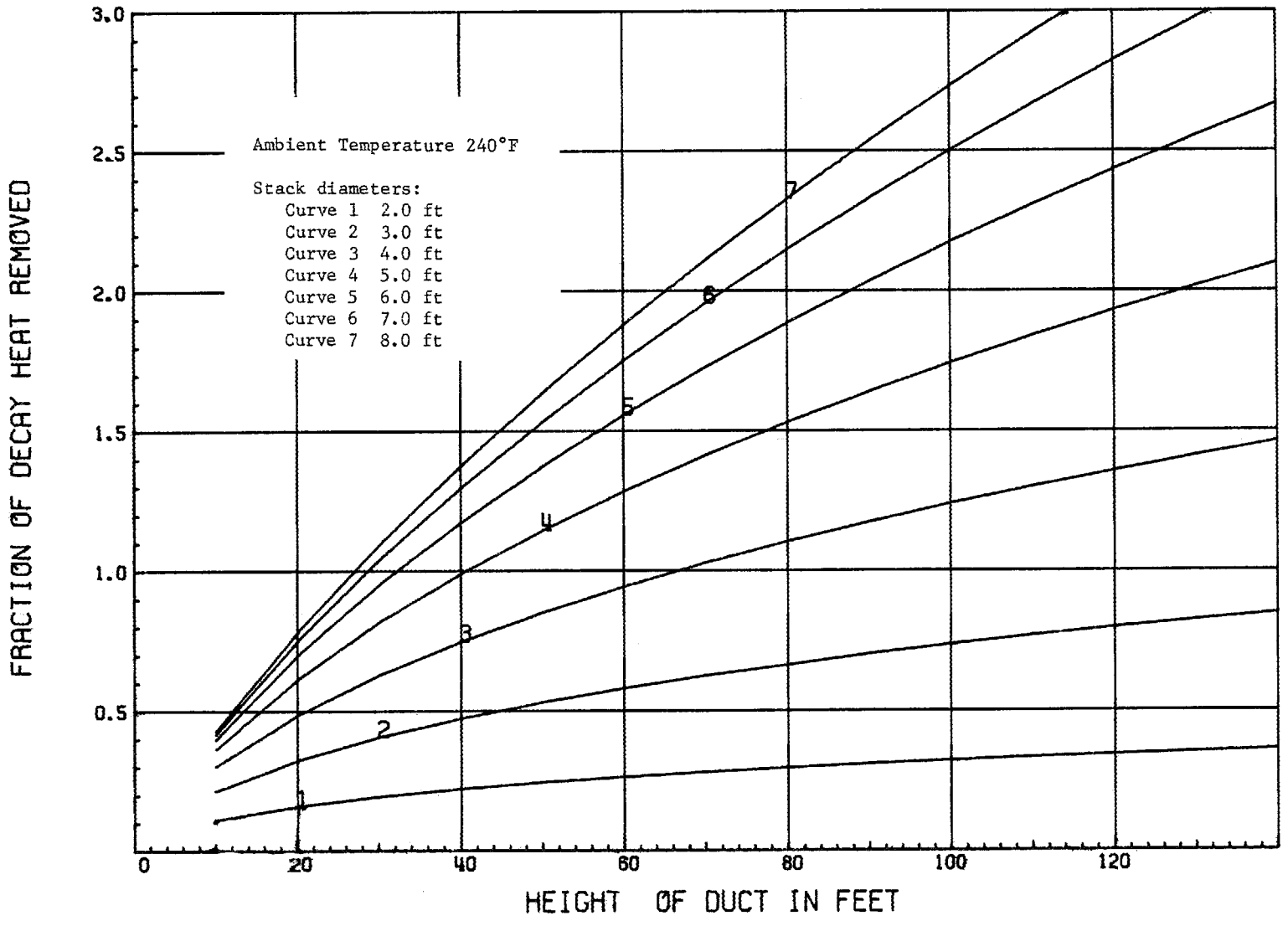

Figure 18. Fraction of Heat Removed vs Height of Stack.

2. The all important consideration of the quantity of iodines which will be adsorbed on the charcoal. In this connection it is emphasized strongly that any statement as to the amount of iodine available for adsorption must be presented as a function of time.

   The source of the iodine activity is defined, in the main, as the iodine present in the reactor at the time of the postulated accident but the radioactive decay of tellurium provides a source which continues to produce iodine after the reactor is shutdown. The extent to which the daughters of the tellurium isotopes should be included was not pursued but a calculation was made to illustrate the contribution of this mode of iodine production to the entire iodine inventory.
3. Advantage has been taken of the time intervals which are inherent in the span of time from reactor shutdown to the time when the charcoal adsorbers have adsorbed that quantity of iodine which can be a threat to the charcoal. Since in the early minutes after reactor shutdown the iodine isotopes decay very rapidly, the heat generating power is also decreasing at a rapid rate and so reduces the maximum heat load that can accumulate on the charcoal.
4. Calculational procedures have been developed for use in estimating the temperature distribution in charcoal adsorbers. Three different mathematical models have been taken to analyze the problem. Computer codes were developed for the study and are briefly described.

ENIS Code

An analytical solution of the differential equation was accomplished by assuming that the temperature of air moving rapidly through the bed would not increase significantly. This code is not useful for low flows which are of most interest. It is useful, however, to make any studies of interest at high air flow rates and in this work provides a check on the numerical method.

CHART Code

A numerical method, employing a general heat program for the computer, was used to solve the heat distribution problem resulting from iodine decay heat in a three-dimensional slab of charcoal. This code was used in three ways:

CHART A: Used to compare results with output from ENIS code; does not allow temperature of gas, T_g, to change.

CHART B: Used for calculations with "Infinite Slab" and "3-dimensional Slab" models; true heat capacity of gas must be used as T_g changes.

CHART C: Used with the "3-Dimensional Unit" model; this was not fully operational at present time.

5. A calculational procedure has been developed for estimating the maximum heat which the charcoal adsorber can lose by natural means when no air is flowing through the system.
6. It was found that a vertical air duct (chimney) made a part of the adsorber exit and extending well up into the containment can create a natural air flow which will remove the maximum heat generated in the adsorber. The mathematical calculation for this consideration is presented along with a computer program (STACK) for solving the problem.
7. Details for the mathematical developments have been included as appendices.

ACKNOWLEDGEMENTS

The assistance of J. P. Sanders, Reactor Division, and C. W. Entemann, formerly of the Computer Technology Center, ORGDP, in the formulation and solution of the original heat transfer concepts.

The authors also wish to acknowledge the contributions of W. P. Turner, of the Computer Technology Center, ORGDP, to the development of the CHART code and the asisstance of G. H. Llewellyn, General Engineering Division, with various calculations.

APPENDICES

Appendix A. Analytical Solution of the Diffusion Equation for the Infinite Slab Model (Derivation of Equation 23)

I. Solution by Green's Theorem

The diffusion equation and its boundary conditions for the infinite slab model (Eq. 22) are given as

$$\rho_b C_{p_b} \frac{1}{\alpha} \frac{\partial \psi}{\partial t} = k_b \frac{\partial^2 \psi}{\partial x^2} + q'''(x,t)$$

Initial condition: $\psi(x,0) = 0$

Boundary condition 1: $\frac{\partial \psi}{\partial x}(0,t) = 0$

Boundary condition2: $\frac{\partial \psi}{\partial x}(\ell,t) = 0$

where

$$q'''(x,t) = +Be^{-bx} \sum_{i=1}^{m} a_i e^{-\beta_1 t} + G \sum_{i=1}^{m} g_i e^{-\beta_i t}. \qquad \text{(A-1)}$$

(For simplicity the double exponential $B_1 e^{-b_1 x} + B_2 e^{-b_2 x}$ was replaced by Be^{-bx} since the procedure of solution is the same.)

Here the one-dimensional Green theorem for conduction* can be used where instead of initial temperature $f(x,t)$ we have heat generation $A(x,t)$ per unit time, per unit volume. We get then:

$$\psi(x,t) = \int_0^t \int_0^\ell u(x,x',t-\tau) \frac{q'''(X',\tau)}{\rho_b C_{p_b}} dx' d\tau \qquad \text{(A-2)}$$

where $u(x,t-\tau)$ is the corresponding Green function for instantaneous plane source of unit strength at $t = 0$ and at x', for a slab $0 \leq x \leq \ell$ with no heat flow over the boundaries $x = \pm \ell$.

The required Green function is:

$$u(x,t-\tau) = \frac{1}{\ell} [1 + 2 \sum_{n=1}^{\infty} e^{-\frac{\alpha n^2 \pi^2}{\ell^2}(t-\tau)} \cos \frac{n\pi x}{\ell} \cos \frac{n\pi x'}{\ell}].$$

Substituting this equation into Eq. (A-2) we get

---

*Carslaw, H. W. and Jaeger, J. C., "Conduction of Heat in Solids," Oxford University Press, 1959, Paragraph 14.3III(7).

$$\psi(x,t) = \int_0^t \int_0^\ell \frac{q'''(x',\tau)}{\ell\rho_b Cp_b}[1 + 2 \sum_{n=1}^{\infty} e^{-\alpha n^2\pi^2(t-\tau)/\ell^2} \cos \frac{n\pi x}{\ell} \cos \frac{n\pi x'}{\ell}]dx'd\tau$$

$$= \frac{1}{\rho_b Cp_b \ell} \int_0^t \int_0^\ell q'''(x',\tau)dx'd_\tau + \frac{2}{\rho_b Cp_b \ell} \sum_{n=1}^{\infty}$$

$$\int_o^\ell \underline{e}^{-\frac{\alpha n^2\pi^2/\ell^2(t-\tau)}{\ell^2}} \cos \frac{n\pi x}{\ell} \int_0^\ell q'''(x',\tau)\cos \frac{n\pi x}{\ell} dx'd\tau. \qquad \text{(A-3)}$$

Using Eq. (A-1), we get:

$$\int_0^\ell q'''(x',\tau)dx' = G\ell \sum_{i=1}^{m} g_i e^{-\beta_i \tau} + \frac{B}{b}(1 - e^{-b\ell})\sum_{i=1}^{m} a_i e^{-\beta_i \tau} \qquad \text{(A-4)}$$

and

$$\int_0^\ell q'''(x',\tau)\cos \frac{n\pi x'}{\ell} dx' = G \sum_{i=1}^{m} g_i e^{-\beta_i \tau} [\sin \frac{n\pi x'}{\ell}]_0^\ell \frac{\ell}{n\pi}$$

$$+ B(\sum_{i=1}^{m} a_i e^{-\beta_i \tau}) \int_0^\ell e^{-bx} \cos \frac{n\pi}{\ell} x'dx'$$

$$= B(\sum_{i=1}^{m} a_i e^{-\beta_i \tau})[\frac{e^{-bx'}}{b^2 + (\frac{n\pi}{\ell})^2} (-b \cos \frac{n\pi x'}{\Pi} + \frac{n\pi}{\ell} \sin \frac{n\pi}{\ell} x')]_0^\ell$$

$$= B(\sum_{i=1}^{m} a_i e^{-\beta_i \tau})[\frac{-b(-1)^n e^{-b\ell} + b}{b^2 + (\frac{n\pi}{\ell})^2}]$$

$$= bB(\sum_{i=1}^{m} a_i e^{-\beta_i \tau})[\frac{1 - (-1)^n e^{-b\ell}}{b^2 + (\frac{n\pi}{\ell})^2}]. \qquad \text{(A-5)}$$

Substituting Eq. (A-4) and (A-5) into Eq. (A-3), we get:

$$\psi(x,t) = \int_0^t [\frac{G}{\rho_b Cp_b} \sum_{i=1}^{m} g_i e^{-\beta_i \tau} + \frac{B}{\ell \rho_b Cp_b b}(1 - e^{-b\ell}) \sum_{i=1}^{m} a_i e^{-\beta_i \tau}$$

$$+ \frac{2bB}{\rho_b Cp_b \ell}(\sum_{i=1}^{m} a_i e^{-\beta_i \tau}) \sum_{n=1}^{\infty} \frac{1 - (-1)^n e^{-b\ell}}{b^2 + (\frac{n\pi}{\ell})^2} e^{-\alpha\pi^2 n^2/\ell^2 (t-\tau)} \cos \frac{n\pi x}{\ell}] d_\tau$$

$$\psi(x,t) = \frac{G}{\rho_b Cp_b \ell} \sum_{i=1}^{m} g_i \int_0^t e^{-\beta_i \tau} d_\tau + \frac{B(1 - e^{-b\ell})}{\rho_b Cp_b b\, \ell} \sum_{i=1}^{m} a_i \int_o^t e^{-\beta_i \tau} d_\tau$$

$$+ \frac{2Bb}{\rho_b Cp_b \ell} \sum_{n=1}^{\infty} \frac{(1 - (-1)^n e^{-b\ell})}{b^2 + (\frac{n\pi}{\ell})^2} \cos \frac{n\pi x}{\ell} \sum_{i=1}^{m} a_i \int_0^t e^{-\beta_i \tau - \frac{\alpha n^2 \pi^2}{\ell^2}(t-\tau)} d\tau$$

$$\int_0^t e^{-\beta_i \tau} d_\tau = [-\frac{1}{\beta_i} e^{-\beta_i \tau}]_0^t = \frac{1}{\beta_i}(1 - e^{-\beta_i \tau})$$

$$\int_0^t e^{-\frac{\alpha n^2 \pi^2 t}{\ell^2} - (\beta_i - \frac{n^2 \pi^2 \alpha}{\ell^2})\tau} d\tau = \frac{e^{-\beta_i t} - e^{-\alpha n^2 \pi^2 t/\ell^2}}{\frac{\alpha n^2 \pi^2}{\ell^2} - \beta_i} . \qquad \text{(A-6)}$$

Substituting back into Eq. (A-6), we get:

$$\psi(x,t) = \frac{G}{\rho_b C_{p_b}} \sum_{i=1}^{m} \frac{g_i}{\beta_i}(1 - e^{-\beta_i t}) + \frac{B(1 - e^{-b\ell})}{\rho_b C_{p_b} b\ell} \sum_{i=1}^{m} \frac{a_i}{\beta_i}(1 - e^{-\beta_i t})$$

$$+ \frac{2Bb}{\rho_b C_{p_b} \ell} \sum_{n=1}^{\infty} \frac{[1 - (-1)^n e^{-b\ell}]}{b^2 + (\frac{n\pi}{\ell})^2} \cos \frac{n\pi x}{\ell} \sum_{i=1}^{m} \frac{a_i(e^{-\beta_i t} - e^{-\alpha n^2 \pi^2 t/\ell^2})}{\frac{\alpha n^2 \pi^2}{\ell^2} - \beta_i}$$

Remembering from Eq.(21) that

$$T_b'(x,t) = T_b(x,t) - T_g = \psi(x,t) e^{-\alpha(H/k)t}$$

and from Eq. (22a) that

$$\beta_i = \lambda_i - \alpha(H/k),$$

we can get the solution for T_b' as given in Eq. (23) in the report.

II. Solution by Fourier Consine Series Expansion

Again the diffusion equation is given by:

$$\frac{\partial^2\psi(x,t)}{\partial x^2} - \frac{1}{\alpha}\frac{\partial\psi(x,t)}{\partial t} = \frac{B}{k}\, e^{-bx} \sum_{i=1}^{m} a_i e^{-\beta_i t} - \frac{G}{k}\sum_{i=1}^{m} g_i e^{-\beta_i t}. \qquad \text{(A-8)}$$

The boundary conditions are:

(a) $\psi(x,0) = 0$

(b) $\left.\frac{\partial\psi}{\partial x}\right|_{x=0,\ x=\ell} = 0.$

We expand the solution (if any) in a Fourier cosine series.

$$\psi\ (x,t) \sim \sum_{n=0}^{\infty} c_n(t)\ \cos\frac{n\pi x}{\ell}$$

where

$$c_n(t) = \frac{2}{\ell}\int_0^{\ell} \psi(x,t)\ \cos\frac{n\pi x}{\ell}\, dx.$$

The set of all $c_n(t)$ uniquely determines $\psi(x,t)$ and is called the finite cosine transform of $\psi(x,t)$. We assume $\partial^2\psi(x,t)/\partial x^2$ is continuous and get:

$$\frac{2}{\ell}\int_0^{\ell}\frac{\partial^2\psi(x,t)}{\partial x^2}\cos\frac{n\pi x}{\ell}\, dx = \frac{2}{\ell}\left[\frac{\partial\psi(x,t)}{\partial x}\cos\frac{n\pi x}{\ell}\right]_0^{\ell}$$

$$+ \frac{2}{\ell}\left[\frac{n\pi}{\ell}\int_0^{\ell}\frac{\partial\psi(x,t)}{\partial x}\sin\frac{n\pi x}{\ell}\, dx\right].$$

The first term is zero since $\left.\frac{\partial\psi}{\partial x}\right|_{x=0,\ x=\ell} = 0.$

$$\frac{n\pi}{\ell}\int_0^{\ell}\frac{\partial\psi(x,t)}{\partial x}\sin\frac{n\pi x}{\ell}\, dx = \frac{n\pi}{\ell}\left[\psi(x,t)\ \sin\frac{n\pi x}{\ell}\right]_0^{\ell} - \frac{n^2\pi^2}{\ell^2}\int_0^{\ell}\psi(x,t)\cos\frac{n\pi x}{\ell}dx.$$

Therefore:

$$\frac{2}{\ell}\int_0^{\ell} \frac{\partial^2\psi(x,t)}{\partial x^2} \cos\frac{n\pi x}{\ell}\, dx = -\frac{n^2\pi^2}{\ell^2}\left[\frac{2}{\ell}\int_0^{\ell}\psi(x,t)\cos\frac{n\pi x}{\ell}\, dx\right]$$

Therefore the cosine transform of

$$\frac{\partial^2\psi(x,t)}{\partial x^2} = -(n\pi/\ell)^2\, c_n(t).$$

$$\frac{2}{\ell}\int_0^{\ell} \frac{\partial\psi(x,t)}{\partial t} \cos\frac{n\pi x}{\ell}\, dx = \frac{\partial}{\partial t}\left[\frac{2}{\ell}\int_0^{\ell}\psi(x,t)\cos\frac{n\pi x}{\ell}\, dx\right] = \frac{dc_n(t)}{\partial t}.$$

Therefore the equation to be solved to find the cosine transform is:

$$-(n\pi/\ell)^2 c_n(t) - \frac{1}{\alpha}\frac{dc_n(t)}{dt} = A_n(t). \qquad \text{(A-9)}$$

where

$$A_n(t) = \frac{2}{\ell}\int_0^{\ell}\left[-\frac{B}{K}e^{-bx}\sum_{i=1}^{m} a_i e^{-\beta_i t} - \frac{G}{k}\sum_{i=1}^{m} g_i e^{-\beta_i t}\right]\cos\frac{n\pi x}{x}\, dx.$$

Rewrite (A-9) to get:

$$\frac{dc_n(t)}{dt} + \alpha(n\pi/\ell)^2\, c_n(t) = -\alpha A_n(t)$$

then:

$$e^{(n\pi/\ell)^2 t}\frac{dc_n(t)}{dt} + \alpha\left(\frac{n\pi}{\ell}\right)^2 c_n(t)\, e^{\alpha(n\pi/\ell)^2 t} = -\alpha A_n(t) e^{\alpha(n\pi/\ell)^2 t}. \qquad \text{(A-10)}$$

Note that:

$$\frac{d}{dt}\left[e^{\alpha(n\pi/\ell)^2 t} c_n(t)\right] = e^{\alpha(n\pi/\ell)^2 t}\frac{d}{dt}c_n(t) + \alpha\left(\frac{n\pi}{\ell}\right)^2 c_n(t)\, e^{\alpha(n\pi/\ell)^2 t}.$$

Then Eq. (A-10) can be written, using $t = \tau$,

$$\frac{d}{d\tau}\left[e^{\alpha(n\pi/\ell)^2\tau} c_n(\tau)\right] = -\alpha A_n(\tau) e^{\alpha(n\pi/\ell)^2\tau}.$$

Integrating from $0 \to t$ gives:

$$e^{\alpha\ (n\pi/\ell)^2 t}\ c_n(t) - c_n(0) = \int_0^t -\alpha A_n(\tau) e^{\alpha(n\pi/\ell)^2}\ d\tau \qquad \text{(A-11)}$$

$$c_n(t) = -\ e^{-\alpha(n\pi/\ell)^2 t} \int_0^t A_n(\tau) e^{\alpha(n\pi/\ell)^2 \tau}\ d_\tau$$

(The condition $\psi(x,0) = 0$ requires that $c_n(0) = 0$. For $n = 0$ Eq. (A-9) becomes:

$$\frac{dc_o(t)}{dt} = -\ \alpha A_o(t)$$

or

$$c_o(t) - c_o(0) = -\alpha \int_0^t A_o(\tau) d_\tau$$

which is in agreement with Eq. (A-11). To evaluate the integral in (A-11) we first find $A_n(t)$.

$$A_n(t) = \frac{-2B}{\ell k} \sum_{i=1}^{m} a_i e^{-\beta_i t} \int_0^\ell e^{-bx} \cos \frac{n\pi x}{\ell} dx - \frac{2G}{k\ell} \sum_{i=1}^{m} g_i e^{-\beta_i t} \int_0^\ell \cos \frac{n\pi x}{\ell} dx$$

For $n \neq 0$:

$$\int_0^\ell e^{-bx} \cos \frac{n\pi x}{\ell}\ dx = \left[\frac{e^{-bx}}{b^2 + (\frac{n\pi}{\ell})^2}(-b \cos \frac{n\pi x}{\ell} + \frac{n\pi}{\ell} \sin \frac{n\pi x}{\ell})\right]_0^\ell$$

$$= \frac{b}{b^2 + (\frac{n\pi}{\ell})^2}\ (1 - (-1)^n\ e^{-b\ell}]$$

and

$$\int_0^\ell \cos\ (n\pi x/\ell) dx = 0.$$

For $n = 0$:

$$\int_0^\ell e^{-bx} \cos\ (n\pi x/\ell) dx = \int_0^\ell e^{-bx} dx = (1/b)(1 - e^{-b\ell})$$

and

$$\int_0^\ell \cos\ (n\pi x/\ell) dx = \ell.$$

For $n \neq 0$:

$$\int_0^t A_n(\tau)e^{\alpha(n\pi/\alpha)^2\tau}d\tau = \frac{-2Bb}{\ell k}\ \frac{1-(-1)^n e^{-b\ell}}{b^2+(\frac{n\pi}{\ell})^2}\ \sum_{i=1}^{m} a_i \int_0^t e^{[\alpha(n\pi/\ell)^2-\beta_i]\tau}d\tau$$

$$= \frac{-2Bb}{\ell k}\ \frac{1-(-1)^n e^{-b\ell}}{b^2+(\frac{n\pi}{\ell})^2}\ \sum_{i=1}^{m} a_i\ [\frac{e^{\alpha(n\pi/\ell)^2-\beta_i]t}-1}{\alpha(\frac{n\pi}{\ell})^2-\beta_i}]$$

For n = 0:

$$\int_0^t A_o(\tau)\ d\tau = \frac{-B}{\ell kb}\ (1-e^{-b\ell})\ \sum_{i=1}^{m} a_i \int_0^t e^{-\beta_i\tau}d\tau$$

$$-\frac{G}{k}\sum_{i=1}^{m} g_i \int_0^t e^{-\beta_i\tau}d\tau.$$

From (A-11) we have:

$$c_n(t) = -\alpha e^{-\alpha(\frac{n\pi}{\ell})^2 t}\int_0^t A_n(\tau)e^{\alpha(n\pi/\ell)^2\tau}\ d\tau$$

Therefore

$$= \alpha e^{-\alpha(n\pi/\ell)^2 t}\ \frac{2Bb}{\ell}\ \frac{1-(-1)^n e^{-b\ell}}{b^2+(\frac{n\pi}{\ell})^2}\ \sum_{i=1}^{m} a_i[\frac{e^{[\alpha(n\pi/\ell)^2-\beta_i]t}-1}{\alpha(\frac{n\pi}{\ell})^2-\beta_i}]$$

Therefore:

$$c_n(t) = \frac{2\alpha Bb}{\ell k}\ \frac{1-(-1)^n e^{-b\ell}}{b^2+(\frac{n\pi}{\ell})^2}\ \sum_{i=1}^{m} a_i\ [\frac{e^{-\beta_i t}-e^{-\alpha(\pi n/\ell)^2 t}}{\alpha(\frac{n\pi}{\ell})^2-\beta_i}]$$

and

$$c_o(t) = -\alpha\int_0^t A_o(\tau)d_\tau = -\frac{B\alpha}{\ell kb}\ (1-e^{-b\ell})\ \sum_{i=1}^{m}\frac{a_i}{\beta_i}\ (e^{-\beta_i t}-1)$$

$$-\frac{G\alpha}{k}\ \sum_{i=1}^{m}\frac{g_i}{\beta_i}\ (e^{-\beta_i t}-1).$$

For t = 0 both of these quantities are 0 so the boundary condition (x, 0) = 0 is satisfied. Finally we get then:

$$\psi(x,t) = \frac{-B}{b\rho_b Cp_b \ell}(1 - e^{-b\ell})\sum_{i=1}^{m} \frac{a_i}{\beta_i}(e^{-\beta_i t} - 1)$$

$$- \frac{G}{\rho_b Cp_b}\sum_{i=1}^{m} \frac{g_i}{\beta_i}(e^{-\beta_i t} - 1) + \frac{2Bb}{\rho_b Cp_b \ell}\sum_{n=1}^{\infty}$$

$$\left[\frac{1 - (-1)^n e^{-b\ell}}{b^2 + (\frac{n\pi}{\ell})^2} \cos\frac{n\pi x}{\ell}\sum_{i=1}^{m} a_i \left[\frac{e^{-\beta_i t} - e^{-\alpha(n\pi/\ell)^2 t}}{\alpha(\frac{n\pi}{\ell})^2 - \beta_i}\right]\right. \qquad \text{(A-12)}$$

Equation (A-12) is the same as Eq. (A-7) and here too we can substitute

$$T_b(x,t) - T_g = Q(x,t) = \psi(x,t)e^{-\alpha(H/k)t}$$

and

$$\beta_i = \lambda_i - \alpha(H/k)$$

to get the solution appearing in Eq. (31) in the report.

Note: Both Eqs. (A-7) and (A-11) are solutions for the single exponential Be^{-bx}. The solution for double exponential $B_1e^{-b_1x} + B_2e^{-b_2x}$ is reached the same way.

ENIS Code

```
LEVEL 19 ( SEPT 69 )                    OS/360  FORTRAN H                                    DATE  71.055/18.06.30

          COMPILER OPTIONS - NAME=  MAIN,OPT=00,LINECNT=60,SOURCE,EBCDIC,NOLIST,NODECK,LOAD,MAP,NOEDIT,NOID,XREF
              CCHARCOAL IGNITION STUDIES                                                        CHAR   0
 ISN 0002           REAL*8 AA(7)/0.21420D0,1.52150D0,4.66690D1,1.78325D2,1.76447D2,            CHAR   5
                  , 4.15427D2,1.51980D2/, GG(7)/0.37952D-1,1.1966D1,1.03444D2,                  CHAR  10
                  , 8.18222D2,2.03247D2, 1.33146D3,7.7953D3/, LAMBDA(7)/2.7667D-2,              CHAR  15
                  , 9.3862D-4,5.9795D-5,5.0245D-3,5.5005D-4, 1.3079D-2,1.7252D-3/, L/CHAR       20
                  , 2.0D0/, SMALB1/9.2104D0/, SB1SQ, BONEL, PIOVL, SMALB2/1.0234D0/,            CHAR  25
                  , SB2SQ, BTWOL, K/1.6667E-4/, ALPHA/4.114D-2/, BTACHG, ALPHDK(6),             CHAR  30
                  , FACT, NPIOVL, NPILSQ, DEXH, DUBSUM(5), TIME(100), BETA(6,7) ,               CHAR  35
                  , SUM3, DEX1(7), EXHADD, H(6), EX3, X(5), ANGLE, TMDLAY, TCHNGE(7)/CHAR       40
                  , 7*1.0D0/, TIMES, DELTAT, A(7), C(7), EXCHNG(7), TMLAG, TTIME,               CHAR  45
                  , ALPHAK, ANPILS, SB1BB1, SB2BB2, EXPB1L, EXPB2L,EXH
                                                                                                CHAR  55
 ISN 0003           INTEGER*4 PLTNO/0/                                                          CHAR  60
 ISN 0004           DIMENSION CLOMP(7), TCEXT(100,5), TSTART(5)                                 CHAR  65
 ISN 0005        10 READ(5,10000,END=380) H(1), DELTAT, TMDLAY, (X(I),I=1,5), IPLOT,            CHAR  70
                  , ISWTCH, BIGB1, BIGB2, BIGG                                                  CHAR  75
 ISN 0006           BONEL = -SMALB1*L                                                           CHAR  80
 ISN 0007           BTWOL = -SMALB2*L                                                           CHAR  85
 ISN 0008           SB1BB1 = SMALB1*BIGB1                                                       CHAR  90
 ISN 0009           SB2BB2 = SMALB2*BIGB2                                                       CHAR  95
 ISN 0010           SB1SQ = SMALB1**2                                                           CHAR 100
 ISN 0011           SB2SQ = SMALB2**2                                                           CHAR 105
 ISN 0012           EXPB1L = DEXP(BONEL)                                                        CHAR 110
 ISN 0013           EXPB2L = DEXP(BTWOL)                                                        CHAR 115
 ISN 0014           PIOVL = 3.14159265 3/L                                                      CHAR 120
 ISN 0015           IF (ISWTCH) 20,40,20                                                        CHAR 125
 ISN 0016        20 ISWTCH = ISWTCH + 1                                                         CHAR 130
 ISN 0017           DO 30 I=2,ISWTCH                                                            CHAR 135
 ISN 0018              READ(5,10100,END=370) H(I),TCHNGE(I)                                     CHAR 140
 ISN 0019        30    CONTINUE                                                                 CHAR 145
 ISN 0020        40 ALPHAK = ALPHA/K                                                            CHAR 150
 ISN 0021           DO 60 I=1,ISWTCH                                                            CHAR 155
 ISN 0022              ALPHDK(I) = ALPHAK*H(I)                                                  CHAR 160
 ISN 0023              DO 50 J=1,7                                                              CHAR 165
 ISN 0024        50       BETA(I,J) = LAMBDA(J) - ALPHDK(I)                                     CHAR 170
 ISN 0025        60    CONTINUE                                                                 CHAR 175
 ISN 0026           WRITE(6,10200) H(1), TMDLAY, (X(I),I=1,5)                                   CHAR 180
 ISN 0027           TMDLAY = TMDLAY*(60.0D0)                                                    CHAR 185
 ISN 0028           CONST1 = -ALPHA*(BIGB1*(1.0 - EXPB1L)/SMALB1 + BIGB2*(1.0 -                 CHAR 190
                  , EXPB2L)/SMALB2)/(K*L)                                                       CHAR 195
 ISN 0029           CONST2 = -ALPHA*BIGG/K                                                      CHAR 200
 ISN 0030           CONST3 = 2.0*ALPHA/(K*L)                                                    CHAR 205
 ISN 0031           DO 70 JX=1,5                                                                CHAR 210
 ISN 0032        70    TSTART(JX) = 0.0                                                         CHAR 215
 ISN 0033           IF (TMDLAY-1.0E-6) 80,80,100                                                CHAR 220
 ISN 0034        80 DO 90 I=1,7                                                                 CHAR 225
 ISN 0035              A(I) = AA(I)                                                             CHAR 230
 ISN 0036              C(I) = GG(I)                                                             CHAR 235
 ISN 0037        90    CONTINUE                                                                 CHAR 240
 ISN 0038           GO TO 120                                                                   CHAR 245
 ISN 0039       100 DO 110 I=1,7                                                                CHAR 250
 ISN 0040              EXCHNG(I) = -LAMBDA(I)*TMDLAY                                            CHAR 255
 ISN 0041              FACT= DEXP(EXCHNG(I))                                                    CHAR 260
 ISN 0042              A(I) = FACT*AA(I)                                                        CHAR 265
 ISN 0043              C(I) = FACT*GG(I)                                                        CHAR 270
 ISN 0044       110    CONTINUE                                                                 CHAR 275
 ISN 0045       120 TIMES = - DELTAT                                                            CHAR 280
 ISN 0046           ICHNGE = 1                                                                  CHAR 285
 ISN 0047           TMLAG = 0.0D0
```

```
                C                                                                CHAR 290
                C              INITIAL VALUES COMPUTED OR ASSIGNED,              CHAR 295
                C              START MAIN CALCULATION                            CHAR 300
                C                                                                CHAR 305
ISN 0048              TIME(1) = 0.000                                            CHAR 310
ISN 0049              DO 130 I=1,5                                               CHAR 315
ISN 0050                 TCFXT(1,I) = 0.0                                        CHAR 320
ISN 0051        130   CONTINUE                                                  CHAR 325
ISN 0052              WRITE(6,10400) TIME(1), (TCFXT(1,JX),JX=1,5)               CHAR 330
ISN 0053              DO 230 JT=2,100                                            CHAR 335
ISN 0054                 TIME(JT) = TIMES + DELTAT*DFLOAT(JT)                    CHAR 340
ISN 0055                 IF (TIME(JT)-TCHNGE(ICHNGE+1)) 170,140,140              CHAR 345
ISN 0056        140      WRITE(6,10300) H(ICHNGE+1)                              CHAR 350
ISN 0057                 TMLAG = - TIME(JT)                                      CHAR 355
ISN 0058                 ICHNGE= ICHNGE +1                                       CHAR 360
ISN 0059                 DO 150 I=1,7                                            CHAR 365
ISN 0060                    EXCHNG(I) = - LAMBDA(I)*TIME(JT)                     CHAR 370
ISN 0061                    FACT = DEXP(EXCHNG(I))                               CHAR 375
ISN 0062                    A(I) = FACT*A(I)                                     CHAR 380
ISN 0063                    G(I) = FACT*G(I)                                     CHAR 385
ISN 0064        150      CONTINUE                                                CHAR 390
ISN 0065                 DO 160 JX=1,5                                           CHAR 395
ISN 0066        160         TSTART(JX) = TCFXT(JT-1,JX)                          CHAR 400
ISN 0067        170      SUM1 = 0.0                                              CHAR 405
ISN 0068                 SUM2 = 0.0                                              CHAR 410
ISN 0069                 TTIME = TIME(JT) + TMLAG                                CHAR 415
ISN 0070                 DO 180 I=1,7                                            CHAR 420
ISN 0071                    DEX1(I) = DEXP(- LAMBDA(I)*TTIME)                    CHAR 425
ISN 0072                     EXH=      (-ALFPDK(ICHNGE)*TTIME)
ISN 0073              IF(EXH.LT.170.) EXH=-170.
ISN 0075                    DEXH =DEXP(EXH)
ISN 0076                    BTACHG = BETA(ICHNGE,I)                              CHAR 435
ISN 0077                    SUM1 = SUM1 + A(I)*(DEX1(I) - DEXH)/BTACHG           CHAR 440
ISN 0078                    SUM2 = SUM2 + G(I)*(DEX1(I) - DEXH)/BTACHG           CHAR 445
ISN 0079        180         CONTINUE                                             CHAR 450
ISN 0080                 DO 220 JX=1,5                                           CHAR 455
ISN 0081                    DUBSUM(JX)= 0.0                                      CHAR 460
ISN 0082                    ANGLE = PIOVL*X(JX)                                  CHAR 465
ISN 0083                    CSTHET = DCOS(ANGLE)                                 CHAR 470
ISN 0084                    CSN = 1.000                                          CHAR 475
ISN 0085                    CSNX = CSTHET                                        CHAR 480
ISN 0086                    DO 200 N=1,100                                       CHAR 485
ISN 0087                       NPIOVL = PIOVL*DFLOAT(N)                          CHAR 490
ISN 0088                       NPILSQ = NPIOVL**2                                CHAR 495
ISN 0089                       ANPILS = ALPHA*NPILSQ                             CHAR 500
ISN 0090                       EX3 = -(ANPILS + ALFPDK(ICHNGE))*TTIME            CHAR 505
ISN 0091              IF(EX3.LT.170.) EX3=-170.
ISN 0093                       SUM3 = 0.0                                        CHAR 510
ISN 0094                       DO 190 I=1,7                                      CHAR 515
ISN 0095                          SUM3 = SUM3 + A(I)*(DEX1(I) - DEXP(EX3)) /(ANPILS -   CHAR 520
                ,                  BTACHG)                                      CHAR 525
ISN 0096        190               CONTINUE                                       CHAR 530
ISN 0097                       CMPRE = DUBSUM(JX)                                CHAR 535
ISN 0098                       DUBSUM(JX) = DUBSUM(JX) + (SB1BB1*(1.000 - EXPB1L* (-   CHAR 540
                ,               1.000)**N)/(SB1SQ + NPILSQ) + SB2BB2* (1.000 - EXPB2L*(-CHAR 545
                ,               1.000)**N)/ (SB2SQ + NPILSQ))*CSNX*SUM3          CHAR 550
ISN 0099                       CSNM = CSNX                                       CHAR 555
ISN 0100                       CSNX = 2.000*CSNX*CSTHET - CSN                    CHAR 560
```

```
ISN 0101                  CSN = CSNN                                          CHAR 565
ISN 0102                  FACT = DABS(CMFRE - DUBSUM(JX))                     CHAR 570
ISN 0103                  IF (FACT.LT.CMFRE*1.0E-6) GO TO 210                 CHAR 575
ISN 0105        200       CONTINUE                                            CHAR 580
ISN 0106        210     TOFXT(JT,JX) = CONST1*SUM1 + CONST2*SUM2 + CONST3*DUBSUM(JX)CHAR 585
                  ,       + TSTART(JX)                                        CHAR 590
ISN 0107        220     CONTINUE                                              CHAR 595
ISN 0108              WRITE(6,10400) TIME(JT),(TOFXT(JT,JX),JX=1,5)           CHAR 600
ISN 0109        230   CONTINUE                                                CHAR 605
ISN 0110            IF (IPLOT) 240,350,240                                    CHAR 610
ISN 0111        240 TMAX = 0.0                                                CHAR 615
ISN 0112            DO 250 JT=1,91,10                                         CHAR 620
ISN 0113              TMAX = AMAX1(TMAX,TOFXT(JT,1),TOFXT(JT+1,1),TOFXT(JT+2,1),  CHAR 625
                  ,     TOFXT(JT+3,1),TOFXT(JT+4,1),TOFXT(JT+5,1), TOFXT(JT+6,1),  CHAR 630
                  ,     TOFXT(JT+7,1),TOFXT(JT+8,1), TOFXT(JT+9,1))         CHAR 635
ISN 0114        250   CONTINUE                                                CHAR 640
ISN 0115            DO 260 I=1,10                                             CHAR 645
ISN 0116              IF (TMAX-10.0**I) 270,270,260                           CHAR 650
ISN 0117        260   CONTINUE                                                CHAR 655
ISN 0118            WRITE(6,10500)                                            CHAR 660
ISN 0119            GO TO 350                                                 CHAR 665
ISN 0120        270 IMAX = I - 2                                              CHAR 670
ISN 0121            TDIV = TMAX/10.0**IMAX                                    CHAR 675
ISN 0122            ITDIV = IFIX(TDIV + 10.0)/10                              CHAR 680
ISN 0123            DELY = FLOAT(ITDIV)*(10.0**IMAX)                          CHAR 685
ISN 0124            DELX = 10.0*DELTAT                                        CHAR 690
ISN 0125            IF (PLTNO) 280,280,290                                    CHAR 695
ISN 0126        280 CALL LINEAR (0.0,10.0,1,0.0,10.0,1,10.0,15,CLCMP)         CHAR 700
ISN 0127            CALL SYMBOL (0.0,5.0,.20,5HALIGN,90.0,5)                  CHAR 705
ISN 0128            CALL SYMBOL (5.0,0.0,.20,5HALIGN,0.0,5)                   CHAR 710
ISN 0129            CALL SYMBOL (1.0,4.0,.40,28HSTUDIES ON CHARCOAL IGNITION,0.0,28)  CHAR 715
ISN 0130            CALL ADVANC (CLCMP)                                       CHAR 720
ISN 0131            PLTNO = 99                                                CHAR 725
ISN 0132        290 CALL LINEAR (0.0,DELY,10,0.0,DELX,10,13.0,15,CLCMP)       CHAR 730
ISN 0133            CALL SYMBOL (1.0,9.5,0.14,11HTEMPERATURE,0.0,11)          CHAR 735
ISN 0134            CALL SYMBOL (3.0,10.0,0.20,                               CHAR 740
                  , 44HTEMPERATURE VERSUS TIME IN A CHARCOAL FILTER,0.0,44)   CHAR 745
ISN 0135            CALL SYMBOL (11.0,0.0,0.14,15HTIME IN MINUTES,0.0,15)     CHAR 750
ISN 0136            CALL CURVE (1,0.0,0.0,CLCMP)                              CHAR 755
ISN 0137            DO 310 JT=1,100                                           CHAR 760
ISN 0138              IF (TOFXT(JT,1)-TMAX) 300,300,310                       CHAR 765
ISN 0139        300   CALL CURVE(2,TIME(JT),TOFXT(JT,1),CLCMP)                CHAR 770
ISN 0140        310   CONTINUE                                                CHAR 775
ISN 0141            CALL ADVANC (CLCMP)                                       CHAR 780
ISN 0142            CALL LINEAR (0.0,10.0,1,0.0,10.0,1,-10.0,15,CLCMP)        CHAR 785
ISN 0143            CALL SYMBOL (1.0,9.0,.40,28HSTUDIES ON CHARCOAL IGNITION,0.0,28)  CHAR 790
ISN 0144            CALL SYMBOL (2.0,8.0,0.20,23HDATA FOR PRECEDING PLOT,0.0,23)  CHAR 795
ISN 0145            CALL SYMBOL (3.0,7.0,0.14,28HTHE ORIGINAL VALUE FOR H WAS,0.0,28) CHAR 800
ISN 0146            CALL NUMBER (6.6,7.0,0.14,H(1),0.0,7H(F11.4))             CHAR 805
ISN 0147            CALL NUMBER (6.8,6.0,0.14,TMDLAY,0.0,6H(F5.1))            CHAR 810
ISN 0148            CALL   SYMBOL (2.0,6.0,0.14,65HZERO TIME ON THE PLOT INDICATES    CHAR 815
                  ,     MINUTES AFTER THE INCIDENT,0.0,65)                    CHAR 820
ISN 0149            IF (ISWTCH) 320,340,320                                   CHAR 825
ISN 0150        320 CALL   SYMBOL (3.0,5.0,0.14,64HTHE VALUE OF H WAS CHANGED AS INDICCHAR 830
                  ,ATED BELOW AT THE GIVEN TIMES,0.0,64)                      CHAR 835
ISN 0151            CALL SYMBOL (5.0,4.0,0.14,25HTIME                   H,0.0,25)  CHAR 840
ISN 0152            DO 330 I=2,ISWTCH                                         CHAR 845
ISN 0153              YY = 4.0 - FLOAT(I-1)*0.5                               CHAR 850
```

```
ISN 0154              CALL NUMBER (4.5,YY,0.14,TCHNCE(I),0.0,7H(E11.3))          CHAR 855
ISN 0155        330   CALL NUMBER (7.25,YY,0.14,H(I),0.0,7H(E11.4))              CHAR 860
ISN 0156        340 CALL ADVANC (CLCMP)                                          CHAR 865
ISN 0157        350 DO 360 I=1,7                                                 CHAR 870
ISN 0158        360    TCHNCE(I) = 1.0D70                                        CHAR 875
ISN 0159            GO TO 10                                                     CHAR 880
ISN 0160        370 WRITE(6,10600)                                               CHAR 885
ISN 0161        380 STOP 5678                                                    CHAR 890
ISN 0162      10000 FORMAT (3D15.6,5F7.3/2I10,3D20.6)                            CHAR 895
ISN 0163      10100 FORMAT (2E20.6)                                              CHAR 900
ISN 0164      10200 FORMAT (1H1,T40,'TEMPERATURE OF FILTER AS A FUNCTION'/T40,'OF POSICHAR 905
                   ,TICN AND TIME'/1H0,T50,'H = VOLUMETRIC HEAT TRANSFER COEFFICIENT =CHAR 910
                   , ',E12.4/1H0,T10,'TIME LAG BETWEEN INCIDENT AND INSTANT AT WHICH 20CHAR 915
                   ,5( OF INVENTORY IS DEPOSITED ON FILTER IS ',F5.2,' HOURS'/1H0/1H0,CHAR 920
                   ,T20,'X = ',5F20.2/1H ,T10,'TIME')                             CHAR 925
ISN 0165      10300 FORMAT(1H0,T20,                                              CHAR 930
                   , 'VOLUMETRIC HEAT TRANSFER COEFFICIENT CHANGING TO ',E14.6)  CHAR 935
ISN 0166      10400 FORMAT (1H ,F15.3,10X,5E20.6)
ISN 0167      10500 FORMAT (1H0,T20,'DATA OUTSIDE RANGE OF PLOT ROUTINE')        CHAR 945
ISN 0168      10600 FORMAT (1H0,T20,'WRONG NUMBER OF DATA CARDS FOR VALUE OF ISWTCH SPCHAR 950
                   ,ECIFIED')                                                    CHAR 955
ISN 0169            END                                                          CHAR 960
```

Table A-1. Input Data Required for ENIS Code

Column	Format	Variable Name	Variable Meaning	Units
Card No. 1				
1-15	0.XXXXXXD±XX (D15.6)	H(1)	First value of the volumetric heat transfer coefficient	Btu/min-in.^{3}-°F
16-30		DELTAT	Time increment to be used for a given run	Minute
31-45		TMDLAY	The time delay before radioactive material is deposited on filter.	Hours
46-52	XXX.XXX F6.3	X(1)	Distance from leading edge of filter of the points at which the temperature is to be computed.	Inch
53-59		X(2)		
60-66		X(3)		
67-73		X(4)		
74-80		X(5)		
Card No. 2				
1-10	XXXXXXXXXX I10	IPLOT	Leave blank if no plots are desired. Any non-zero integer in col. 10 will cause plots to be generated.	Dimensionless
11-20		ICHNGE	Leave blank if volumetric heat transfer coefficient remains constant throughout a given case. Contains the number of changes, up to 5, in col. 20 otherwise.	"
21-40	0.XXXXXXD±XX (D20.6)	BIGB1	Denotes β"power" of I for the reactor under consideration.	$\frac{\text{tons of U}}{\text{in.}^3 \text{ of bed}}$
41-60		BIGB2	Same as BIGB1 but for CH_3I.	"
61-80		BIGG	Denotes γ"power" for the reactor under consideration.	"

Column	Format	Variable Name	Variable Meaning	Units
Cards 3-7				
0-20	0.XXXXXXE±XX E20.6	H(I)	"New" values of the volumetric heat transfer coefficient	Btu/min-in.^{3}-°F
21-40		TCHNGE(I)	Time at which change to H(I) takes effect.	Minute

Table A-2. Output from ENIS Code

TEMPERATURE OF FILTER AS A FUNCTION
OF POSITION AND TIME

H = VOLUMETRIC HEAT TRANSFER COEFFICIENT = 0.1195D 00

TIME LAG BETWEEN INCIDENT AND INSTANT AT WHICH 25(OF INVENTORY IS DEPOSITED ON FILTER IS 0.17 HOURS

X =	0.0	0.25	0.50	1.00	2.00
TIME					
0.0	0.0	0.0	0.0	0.0	0.0
0.200D 01	0.414960E 01	0.175685E 01	0.115409E 01	0.512240E 00	0.496222E 00
0.400D 01	0.409575E 01	0.173393E 01	0.113896E 01	0.505399E 00	0.489589E 00
0.600D 01	0.404309E 01	0.171150E 01	0.112415E 01	0.498704E 00	0.483096E 00
0.800D 01	0.399158E 01	0.168957E 01	0.110966E 01	0.492150E 00	0.476740E 00
0.100D 02	0.394121E 01	0.166811E 01	0.109549E 01	0.485734E 00	0.470517E 00
0.120D 02	0.389193E 01	0.164712E 01	0.108162E 01	0.479453E 00	0.464426E 00
0.140D 02	0.384373E 01	0.162658E 01	0.106805E 01	0.473303E 00	0.458461E 00
0.160D 02	0.379657E 01	0.160648E 01	0.105477E 01	0.467281E 00	0.452621E 00
0.180D 02	0.375043E 01	0.158681E 01	0.104177E 01	0.461385E 00	0.446902E 00
0.200D 02	0.370529E 01	0.156757E 01	0.102905E 01	0.455611E 00	0.441301E 00
0.220D 02	0.366112E 01	0.154874E 01	0.101660E 01	0.449956E 00	0.435816E 00
0.240D 02	0.361790E 01	0.153030E 01	0.100441E 01	0.444418E 00	0.430443E 00
0.260D 02	0.357560E 01	0.151226E 01	0.992483E 00	0.438993E 00	0.425181E 00
0.280D 02	0.353421E 01	0.149460E 01	0.980803E 00	0.433680E 00	0.420026E 00
0.300D 02	0.349370E 01	0.147732E 01	0.969367E 00	0.428474E 00	0.414976E 00
0.320D 02	0.345404E 01	0.146039E 01	0.958169E 00	0.423374E 00	0.410029E 00
0.340D 02	0.341523E 01	0.144382E 01	0.947205E 00	0.418378E 00	0.405181E 00
0.360D 02	0.337723E 01	0.142760E 01	0.936468E 00	0.413482E 00	0.400431E 00
0.380D 02	0.334002E 01	0.141172E 01	0.925952E 00	0.408685E 00	0.395776E 00
0.400D 02	0.330360E 01	0.139616E 01	0.915653E 00	0.403983E 00	0.391214E 00
0.420D 02	0.326794E 01	0.138093E 01	0.905565E 00	0.399375E 00	0.386743E 00
0.440D 02	0.323302E 01	0.136601E 01	0.895683E 00	0.394859E 00	0.382361E 00
0.460D 02	0.319882E 01	0.135139E 01	0.886003E 00	0.390432E 00	0.378065E 00
0.480D 02	0.316532E 01	0.133708E 01	0.876519E 00	0.386093E 00	0.373854E 00
0.500D 02	0.313252E 01	0.132305E 01	0.867227E 00	0.381838E 00	0.369725E 00
0.520D 02	0.310039E 01	0.130931E 01	0.858121E 00	0.377667E 00	0.365677E 00
0.540D 02	0.306891E 01	0.129585E 01	0.849199E 00	0.373577E 00	0.361708E 00
0.560D 02	0.303808E 01	0.128266E 01	0.840455E 00	0.369566E 00	0.357816E 00
0.580D 02	0.300787E 01	0.126974E 01	0.831885E 00	0.365633E 00	0.353998E 00
0.600D 02	0.297827E 01	0.125707E 01	0.823485E 00	0.361776E 00	0.350254E 00
0.620D 02	0.294926E 01	0.124466E 01	0.815251E 00	0.357993E 00	0.346582E 00
0.640D 02	0.292084E 01	0.123249E 01	0.807179E 00	0.354281E 00	0.342979E 00
0.660D 02	0.289299E 01	0.122057E 01	0.799266E 00	0.350641E 00	0.339445E 00
0.680D 02	0.286568E 01	0.120888E 01	0.791506E 00	0.347068E 00	0.335978E 00
0.700D 02	0.283892E 01	0.119741E 01	0.783898E 00	0.343564E 00	0.332576E 00
0.720D 02	0.281269E 01	0.118618E 01	0.776437E 00	0.340125E 00	0.329237E 00
0.740D 02	0.278697E 01	0.117516E 01	0.769120E 00	0.336751E 00	0.325961E 00
0.760D 02	0.276176E 01	0.116435E 01	0.761943E 00	0.333439E 00	0.322745E 00
0.780D 02	0.273704E 01	0.115375E 01	0.754903E 00	0.330188E 00	0.319589E 00
0.800D 02	0.271279E 01	0.114336E 01	0.747997E 00	0.326997E 00	0.316491E 00
0.820D 02	0.268902E 01	0.113316E 01	0.741222E 00	0.323865E 00	0.313450E 00
0.840D 02	0.266570E 01	0.112316E 01	0.734575E 00	0.320790E 00	0.310464E 00
0.860D 02	0.264283E 01	0.111335E 01	0.728053E 00	0.317771E 00	0.307532E 00
0.880D 02	0.262039E 01	0.110372E 01	0.721653E 00	0.314806E 00	0.304653E 00
0.900D 02	0.259838E 01	0.109427E 01	0.715371E 00	0.311895E 00	0.301826E 00
0.920D 02	0.257679E 01	0.108500E 01	0.709206E 00	0.309036E 00	0.299049E 00
0.940D 02	0.255560E 01	0.107591E 01	0.703155E 00	0.306228E 00	0.296322E 00
0.960D 02	0.253481E 01	0.106698E 01	0.697214E 00	0.303469E 00	0.293643E 00
0.980D 02	0.251441E 01	0.105822E 01	0.691383E 00	0.300759E 00	0.291012E 00
0.100D 03	0.249438E 01	0.104961E 01	0.685657E 00	0.298097E 00	0.288426E 00
0.102D 03	0.247473E 01	0.104117E 01	0.680034E 00	0.295482E 00	0.285885E 00

0.104D 03	0.245543E 01	0.103287E 01	0.674513E 00	0.292912E 00	0.283389E 00
0.106D 03	0.243649E 01	0.102473E 01	0.669090E 00	0.290386E 00	0.280935E 00
0.108D 03	0.241790E 01	0.101673E 01	0.663764E 00	0.287904E 00	0.278524E 00
0.110D 03	0.239964E 01	0.100888E 01	0.658533E 00	0.285464E 00	0.276154E 00
0.112D 03	0.238170E 01	0.100117E 01	0.653394E 00	0.283066E 00	0.273824E 00
0.114D 03	0.236409E 01	0.993591E 00	0.648345E 00	0.280708E 00	0.271534E 00
0.116D 03	0.234680E 01	0.986148E 00	0.643384E 00	0.278390E 00	0.269282E 00
0.118D 03	0.232981E 01	0.978835E 00	0.638509E 00	0.276111E 00	0.267068E 00
0.120D 03	0.231312E 01	0.971650E 00	0.633718E 00	0.273870E 00	0.264890E 00
0.122D 03	0.229672E 01	0.964590E 00	0.629010E 00	0.271666E 00	0.262749E 00
0.124D 03	0.228061E 01	0.957651E 00	0.624382E 00	0.269499E 00	0.260643E 00
0.126D 03	0.226478E 01	0.950832E 00	0.619833E 00	0.267367E 00	0.258571E 00
0.128D 03	0.224922E 01	0.944129E 00	0.615360E 00	0.265270E 00	0.256533E 00
0.130D 03	0.223393E 01	0.937540E 00	0.610963E 00	0.263206E 00	0.254528E 00
0.132D 03	0.221890E 01	0.931062E 00	0.606639E 00	0.261176E 00	0.252555E 00
0.134D 03	0.220413E 01	0.924693E 00	0.602387E 00	0.259179E 00	0.250614E 00
0.136D 03	0.218960E 01	0.918430E 00	0.598205E 00	0.257213E 00	0.248704E 00
0.138D 03	0.217532E 01	0.912271E 00	0.594092E 00	0.255279E 00	0.246824E 00
0.140D 03	0.216128E 01	0.906214E 00	0.590047E 00	0.253375E 00	0.244973E 00
0.142D 03	0.214747E 01	0.900256E 00	0.586067E 00	0.251501E 00	0.243152E 00
0.144D 03	0.213389E 01	0.894395E 00	0.582151E 00	0.249656E 00	0.241359E 00
0.146D 03	0.212054E 01	0.888630E 00	0.578298E 00	0.247840E 00	0.239593E 00
0.148D 03	0.210740E 01	0.882957E 00	0.574506E 00	0.246051E 00	0.237855E 00
0.150D 03	0.209447E 01	0.877376E 00	0.570775E 00	0.244290E 00	0.236143E 00
0.152D 03	0.208175E 01	0.871883E 00	0.567103E 00	0.242556E 00	0.234457E 00
0.154D 03	0.206924E 01	0.866477E 00	0.563488E 00	0.240848E 00	0.232797E 00
0.156D 03	0.205692E 01	0.861157E 00	0.559929E 00	0.239166E 00	0.231161E 00
0.158D 03	0.204480E 01	0.855919E 00	0.556426E 00	0.237509E 00	0.229550E 00
0.160D 03	0.203287E 01	0.850763E 00	0.552976E 00	0.235876E 00	0.227963E 00
0.162D 03	0.202113E 01	0.845687E 00	0.549579E 00	0.234268E 00	0.226399E 00
0.164D 03	0.200957E 01	0.840689E 00	0.546234E 00	0.232683E 00	0.224858E 00
0.166D 03	0.199819E 01	0.835767E 00	0.542940E 00	0.231121E 00	0.223340E 00
0.168D 03	0.198698E 01	0.830920E 00	0.539694E 00	0.229582E 00	0.221843E 00
0.170D 03	0.197594E 01	0.826145E 00	0.536498E 00	0.228065E 00	0.220368E 00

Appendix B. A Computer Program for Calculating Heat Generation, in a Charcoal Adsorber, Due to Iodine Decay

This program, listed on the following page, is in XTRAN, a version of Fortran IV for the time-sharing computer of the Com-Share Company. The heat generation rate due to the decay of iodine on the charcoal adsorber of the reactor system described on page 28 of the text is calculated for various times after reactor shutdown. Table B-1 is a listing of the output as it comes from the computer.

Listing of Code for Heat Developed in the Charcoal Bed (Q''')

```
/CHRHG/

D'N A(13) , G(13) , D(13) , Q(21)
ØPEN(3,INPUT, /MST-CHØDT/)
READ(3,300)(( A(IB) , G(IB) , D(IB)) , IB=1,11 )
7 F'T(10/,$PRØGRAM CHRHG REVISED 10/9/70$)
WRITE (1,7)
WRITE(1,100)
A'T P
WRITE(1,220)
220 F'T($FRACTIØN ØF TØTAL HEAT = $,Z)
A'T FAC
WRITE (1,225)
225 F'T ($TIME DELAY -MINUTES = $,Z)
ACCEPT TD
WRITE(1,110)
A'T TI
WRITE (1,301)
301 F'T($FINAGGLE FACTØR (NØRMALLY 1.0) = $,Z)
A'T CAP
WRITE(1,307)
307 F'T($TYPE ØF LØADING (0=INSTANT,1=GRADUAL) = $,Z)
A'T J5
WRITE(1,200)
WRITE (1,201)
WRITE (1,202)
T=TD
5  SA = 0.0
SG = 0.0
DØ 15 J = 1,13
E = EXP(-D(J)*T)
A1=A(J)*E
G1=G(J)*E
SA=SA+A1
SG=SG+G1
IF(J5.EQ.0) DR =1.
IF(J5.EQ.1) DR = 1. - EXP(-0.08819*(T-TD))
15  CØNTINUE
X = 0.0
DØ 20 I=1,21
Q(I) =(((0.063260*EXP(-9.2104*X)+8.969E-4*EXP(-1.0234*X))
                *SA)+(1.9079E-3*P*SG))*FAC *DR
X = X+0.1
20  CØNTINUE
QQ = (Q(1)+Q(21))/2.0
QS = 0.0
DØ 30 K=2,20
QS=QS+Q(K)
30  CØNTINUE
QA = 0.05*(QQ+QS)
WTM = 14.17638 * QA/CAP
WRITE(1,210)T,Q(21) , Q(1) , QA , WTM
T = T + TI
IF(T.LT.181.0) GØ TØ 5
100 F'T($FRACTIØN LØCALLY DEPØSITED GAMMAS = $,Z)
110 F'T($TIME INCREMENT (MINUTES) = $,Z)
200 F'T(6/,$ TIME   MIN.  Q'''   MAX.  Q'''   AVG.  Q'''
   TØTAL HEAT$)
201 F'T($ MIN.   BTU/HR*FT3   BTU/HR*FT3   BTU/HR*FT3
   MEGAWATTS$)
202 F'T($*****   **********   **********   **********
   **********$,/)
210 F'T(F5.1,4(2X,1PE11.4))
300 F'T(3E15.5)
CLØSE(3)
END
```

Table B-1. Output of the XTRAN Program for Comparing Heat Generation Rate from Iodine Decay Heat on Charcoal

PRØGRAM CHRHG REVISED 10/9/70
FRACTIØN LØCALLY DEPØSITED GAMMAS = .5
FRACTIØN ØF TØTAL HEAT = .25
TIME DELAY -MINUTES = 10
TIME INCREMENT (MINUTES) = 2
FINAGGLE FACTØR (NØRMALLY 1.0) = 1
TYPE ØF LØADING (0=INSTANT,1=GRADUAL) = 1

TIME MIN. *****	MIN. Q''' BTU/HR*FT3 **********	MAX. Q''' BTU/HR*FT3 **********	AVG. Q''' BTU/HR*FT3 **********	TØTAL HEAT MEGAWATTS **********
10.0	0.0000E+00	0.0000E+00	0.0000E+00	0.0000E+00
12.0	4.8761E-03	9.9507E-02	1.0698E-02	1.5165E-01
14.0	8.8441E-03	1.8056E-01	1.9407E-02	2.7513E-01
16.0	1.2063E-02	2.4638E-01	2.6478E-02	3.7536E-01
18.0	1.4664E-02	2.9964E-01	3.2196E-02	4.5642E-01
20.0	1.6757E-02	3.4255E-01	3.6799E-02	5.2167E-01
22.0	1.8429E-02	3.7692E-01	4.0483E-02	5.7390E-01
24.0	1.9756E-02	4.0426E-01	4.3411E-02	6.1540E-01
26.0	2.0799E-02	4.2581E-01	4.5715E-02	6.4807E-01
28.0	2.1608E-02	4.4260E-01	4.7506E-02	6.7346E-01
30.0	2.2224E-02	4.5546E-01	4.8876E-02	6.9288E-01
32.0	2.2682E-02	4.6510E-01	4.9899E-02	7.0738E-01
34.0	2.3011E-02	4.7210E-01	5.0638E-02	7.1786E-01
36.0	2.3233E-02	4.7693E-01	5.1144E-02	7.2503E-01
38.0	2.3368E-02	4.7999E-01	5.1459E-02	7.2950E-01
40.0	2.3433E-02	4.8161E-01	5.1619E-02	7.3177E-01
42.0	2.3440E-02	4.8205E-01	5.1652E-02	7.3224E-01
44.0	2.3400E-02	4.8153E-01	5.1583E-02	7.3126E-01
46.0	2.3322E-02	4.8023E-01	5.1430E-02	7.2910E-01
48.0	2.3214E-02	4.7832E-01	5.1211E-02	7.2599E-01
50.0	2.3082E-02	4.7590E-01	5.0938E-02	7.2212E-01
52.0	2.2930E-02	4.7309E-01	5.0623E-02	7.1765E-01
54.0	2.2763E-02	4.6997E-01	5.0274E-02	7.1271E-01
56.0	2.2584E-02	4.6661E-01	4.9900E-02	7.0740E-01
58.0	2.2397E-02	4.6307E-01	4.9506E-02	7.0181E-01
60.0	2.2202E-02	4.5938E-01	4.9097E-02	6.9601E-01
62.0	2.2003E-02	4.5560E-01	4.8677E-02	6.9007E-01
64.0	2.1801E-02	4.5175E-01	4.8251E-02	6.8402E-01
66.0	2.1597E-02	4.4786E-01	4.7820E-02	6.7791E-01
68.0	2.1392E-02	4.4395E-01	4.7387E-02	6.7178E-01
70.0	2.1187E-02	4.4004E-01	4.6954E-02	6.6563E-01
72.0	2.0982E-02	4.3614E-01	4.6522E-02	6.5951E-01

74.0	2.0779E-02	4.3226E-01	4.6092E-02	6.5342E-01
76.0	2.0577E-02	4.2841E-01	4.5665E-02	6.4737E-01
78.0	2.0377E-02	4.2459E-01	4.5243E-02	6.4139E-01
80.0	2.0179E-02	4.2083E-01	4.4826E-02	6.3547E-01
82.0	1.9983E-02	4.1710E-01	4.4413E-02	6.2962E-01
84.0	1.9790E-02	4.1343E-01	4.4007E-02	6.2385E-01
86.0	1.9600E-02	4.0982E-01	4.3606E-02	6.1817E-01
88.0	1.9413E-02	4.0626E-01	4.3211E-02	6.1257E-01
90.0	1.9228E-02	4.0275E-01	4.2822E-02	6.0706E-01
92.0	1.9046E-02	3.9931E-01	4.2439E-02	6.0163E-01
94.0	1.8868E-02	3.9592E-01	4.2063E-02	5.9630E-01
96.0	1.8692E-02	3.9259E-01	4.1693E-02	5.9105E-01
98.0	1.8519E-02	3.8931E-01	4.1329E-02	5.8589E-01
100.0	1.8348E-02	3.8610E-01	4.0971E-02	5.8083E-01
102.0	1.8181E-02	3.8294E-01	4.0620E-02	5.7584E-01
104.0	1.8016E-02	3.7983E-01	4.0275E-02	5.7095E-01
106.0	1.7855E-02	3.7679E-01	3.9935E-02	5.6614E-01
108.0	1.7696E-02	3.7379E-01	3.9602E-02	5.6141E-01
110.0	1.7539E-02	3.7085E-01	3.9274E-02	5.5677E-01
112.0	1.7385E-02	3.6797E-01	3.8952E-02	5.5220E-01
114.0	1.7234E-02	3.6513E-01	3.8636E-02	5.4772E-01
116.0	1.7086E-02	3.6235E-01	3.8326E-02	5.4332E-01
118.0	1.6940E-02	3.5961E-01	3.8020E-02	5.3899E-01
120.0	1.6796E-02	3.5693E-01	3.7720E-02	5.3474E-01
122.0	1.6655E-02	3.5429E-01	3.7426E-02	5.3056E-01
124.0	1.6516E-02	3.5170E-01	3.7136E-02	5.2646E-01
126.0	1.6380E-02	3.4916E-01	3.6852E-02	5.2242E-01
128.0	1.6245E-02	3.4666E-01	3.6572E-02	5.1846E-01
130.0	1.6113E-02	3.4421E-01	3.6297E-02	5.1456E-01
132.0	1.5984E-02	3.4179E-01	3.6027E-02	5.1073E-01
134.0	1.5856E-02	3.3942E-01	3.5761E-02	5.0696E-01
136.0	1.5730E-02	3.3709E-01	3.5500E-02	5.0326E-01
138.0	1.5607E-02	3.3481E-01	3.5243E-02	4.9962E-01
140.0	1.5485E-02	3.3256E-01	3.4991E-02	4.9604E-01
142.0	1.5365E-02	3.3035E-01	3.4742E-02	4.9252E-01
144.0	1.5248E-02	3.2817E-01	3.4498E-02	4.8906E-01
146.0	1.5132E-02	3.2604E-01	3.4258E-02	4.8566E-01
148.0	1.5018E-02	3.2394E-01	3.4022E-02	4.8231E-01
150.0	1.4906E-02	3.2187E-01	3.3790E-02	4.7901E-01
152.0	1.4795E-02	3.1984E-01	3.3561E-02	4.7577E-01
154.0	1.4686E-02	3.1785E-01	3.3336E-02	4.7258E-01
156.0	1.4579E-02	3.1588E-01	3.3115E-02	4.6945E-01
158.0	1.4474E-02	3.1395E-01	3.2897E-02	4.6636E-01
160.0	1.4370E-02	3.1205E-01	3.2683E-02	4.6332E-01
162.0	1.4268E-02	3.1018E-01	3.2472E-02	4.6033E-01
164.0	1.4167E-02	3.0834E-01	3.2264E-02	4.5739E-01
166.0	1.4068E-02	3.0653E-01	3.2060E-02	4.5449E-01
168.0	1.3970E-02	3.0475E-01	3.1858E-02	4.5164E-01
170.0	1.3874E-02	3.0300E-01	3.1660E-02	4.4883E-01
172.0	1.3779E-02	3.0127E-01	3.1465E-02	4.4606E-01
174.0	1.3686E-02	2.9957E-01	3.1273E-02	4.4334E-01
176.0	1.3593E-02	2.9790E-01	3.1084E-02	4.4065E-01
178.0	1.3503E-02	2.9626E-01	3.0897E-02	4.3801E-01
180.0	1.3413E-02	2.9463E-01	3.0713E-02	4.3540E-01

```
*STØP*
($MAIN$)300+2
+
```

Appendix C. CHART Code

A. Stability Criteria for "CHART"

HEATING3, like any other heat transfer code which uses the explicit method for its transient calculations has a limit on the size of time step used if stability is to be guaranteed. The basic heat conduction equation used in HEATING3 is (see Eq. 2-22, Ref. 10):

$$T_J(t + \Delta t) = T_g(t) + \frac{\Delta t}{Cg} [\sum_{i=1}^{m} {}_JK_i(T_i(0) - T_g(0)) + \theta_J(t) \qquad \text{C-1}$$

and the stability criteria for this equation is (Eq. 2-23 in Ref. 10):

$$\Delta t_{max} \leq \left(\frac{C_J}{\sum_{i=1}^{m} {}_JK_i}\right) \text{min for all J} \qquad \text{C-2}$$

The stability criteria given in Eq. C-2 does not include the heat generation term Q_J. This is correct assuming that θ_J is not itself a function of temperature. However, in our case (see Eqs. 17 and 26):

$$Q_J = q''' - H(T - T_g). \qquad \text{C-3}$$

The mathematical stability for Eq. (C-1) if Q_J is itself a function of temperature should include the coefficient of the temperature. In general any vectorial equation in the form

$$\alpha_1\vec{V}_1 + \alpha_2\vec{V}_2 + \ldots \alpha_n\vec{V}_n = 0$$

where $\alpha_1, \alpha_2 \ldots \alpha_n$ are scalar coefficients of the vectors $\vec{V}_1, \vec{V}_2 \ldots \vec{V}_n$ in order to be stable must satisfy the condition that

$$\alpha_1 + \alpha_2 + \ldots \alpha_n \geq 0.$$

In the case of the heat conduction equation the system of vectors becomes

$$- \sum_{i=1}^{m} K_{i,J} (T_i - T_J) + \frac{C_J}{\Delta t} (T'_J - T_J) = 0$$

and therefore the stability criteria becomes like in Eq. (C-2)

In our case the system of vectors becomes

$$- \sum_{i=1}^{m} {}_iK_J(T_i - T_J) + V_JH(T_J - T_g) + \frac{C_J}{\Delta t} (t'_J - T_J) = 0$$

and therefore the stability criteria is

$$(\Delta t)_{max} \leq \left(\frac{C_J}{\sum_{i=1}^{m} {}_JK_i + V_J H}\right) \text{ min for all} \qquad \text{C-4}$$

where V_J is the volume of the node element and H is our volumetric heat transfer coefficient. This criteria is incorporated now in CHART. The modified method included in HEATING3 (see Ref. 11) was changed here to include the correct criteria for stability as given in Eq. (C-4).

Inserting Eq. (8) for calculating the cooling gas temperature for every increment along its flow created an additional stability problem. The differential equation added is (see Eq. 8):

$$\frac{dT_g}{dx} = \frac{HA(T - T_g)}{8CpV_gA} \qquad \text{C-5}$$

For such an equation to be stable we must have

$$\rho CpV_gA - A\Delta XH \geq 0$$

or

$$\Delta X \leq \left(\frac{\rho CpV_g}{H}\right) \qquad \text{C-6}$$

This stability criteria was also incorporated into CHART as part of the HGNEN subroutine. The modified method used in HEATING3 (see Ref. 11) was also used here although reduced to the simpler case of Eq. (C-5). This eliminates the requirement of using too many subdivisions along the direction of gas flow.

Table C-1. Input Table for CHART

Card	Col.	Format	Variable Name		Variable Meaning	Units
A	1-12	D12.4	BIGB1	(B1)*	Reactor constant - beta heat due to elemental iodine (p. 15)	$Mw(t)/in.^3$
	13-24	0.XXXXD±XX	BIGB2	(B2)	Reactor constant - beta heat due to methyl iodide (p. 15)	$Mw(t)/in.^3$
	25-36		BIGG	(G)	Reactor constant - gamma heat due to iodine decay (p. 15)	$Mw(t)/in.^3$
	37-48		SMLB1	(b_1)	Attenuation coefficient for iodine	Dimensionless
	49-60		SMLB2	(b_2)	Attenuation coefficient for	
	61-72				methyl iodide	
B	1-12	D12.4	GIT	(T_g)	Gas initial temperature	°F
	13-24	0.XXXXD±XX	GDEN		Gas density	$lb/in.^3$
	25-36		GSPH		Specific heat of gas	Btu/lb-°F
	37-48		DELX		Thickness of division of charcoal adsorber.	Inches
	49-60		DIMA		When more than one layer of	
	61-72		DIMB		charcoal is considered DIMA represents lattice point where 1st layer begins and DIMB represents beginning of 2nd layer in flow direction. No number-program assumes zero.	
C	1-12	D12.4	BUCOEF		Buildup coefficient - governs rate of iodine accumulation on charcoal (see pp. 16 and 88)	1/in.
	13-24	0.XXXXD±XX	TMDLAY	(t_D)	Time delay between end of fissioning and beginning of iodine adsorption	Min.
	25-36		BGGVEL	(v_g)	Beginning gas velocity	in./min
	37-48		ACGVEL		Accident gas velocity	in./min
D1	1-15	D15.6	AA(I)	(a_i)	Beta heat/thermal Mw of reactor power for individual isotopes	Btu/min-Mw(t)
	16-30	0.000000D±XX	GG(I)	(g_i)	Gamma heat/thermal Mw of reactor power for individual isotopes	Btu/min-Mw(t)
	31-45		LAMBDA(I)	(λ_i)	Decay constant of iodine isotopes	1/min.
REPEAT D2,D3			One card for each isotope.			

Cards for HEATING3 follow* (notation used in text, see page 16 and Appendix D).

The following table is a concentrated summary of the format and information needed to prepare the input data deck. Except for the IT cards, columns 73 through 80 of each card are reserved for identification, and the user may or may not choose to punch this information. The table in this column gives proposed identification names for the cards and, in parentheses, the reference sections in the report where more information can be found. The first line in each format box includes the variable name actually used in the program and, in parentheses, the format of that variable. The rest of the box includes a short explanation of the input in that box. In some cards, where free space is available, e.g., G or I cards, additional notes have been included to describe the way the input information will be used in the program itself.

JOBDES(I), Job Description, Format 18A4, (3.5.1)								Card 1
Columns 1-9	Columns 10-18	Columns 19-27	Columns 28-36	Columns 37-45	Columns 46-54	Columns 55-63	Columns 64-72	Columns 73-80
NGEOM (I9) Geometry type. 1-RØZ 6-XYZ 2-RØ 7-XY 3-RZ 8-XZ 4-R 9-X 5-Z	NOREGT (I9) Total number of regions. (Cards R1 & R2) Maximum 100	MATLT (I9) Total number of materials. (Cards M) Maximum 50	NINTFN (I9) Total number of initial temperature functions. (Cards I) Maximum 25	NPDFN (I9) Total number of position dependent functions. (Cards P) Maximum 50	NGENFN (I9) Total number of heat generation functions. (Cards G) Maximum 20	NTDFN (I9) Total number of time dependent functions. (Cards T) Maximum 20	IOUT (I9) If isothermal plots are desired, enter 2; otherwise leave blank.	Card 2 (3.5.2)
IGT (I9) Total number of gross lattice lines in X or R direction. (Entries in L1) Maximum 50	JGT (I9) Total number of gross lattice lines in Y or θ direction. (Entries in L2) Maximum 50	KGT (I9) Total number of gross lattice lines in Z direction. (Entries in L3) Maximum 50	NBDTPT (I9) Total number of boundaries. (Cards B1 & B2) Maximum 50	INITEM (I9) Total number of lattice points with temperatures specified on IT cards. Maximum 1750	JIN (I9) Unit number for reading initial temperature from IT cards (if any). (5 on IBM)	JOUT (I9) Unit number for punching final temperature on IT cards. (7 on IBM)		Card 3 (3.5.3)
NTYPE (I9) Problem type. 1 steady state; -1 transient. (See section 3.5.4(a) for other types)	NOITX (I9) Maximum number of steady state iterations. (Recommend 300-500)	NEX1 (I9) Inactive, leave blank.	NEX (I9) Inactive, leave blank.	NDTA (I9) Number of time steps between printed outputs. Next entry must be blank.	NPRINT (I9) Number of times output will be printed. (Entries in Ø card), preceding entry must be blank. Maximum 100	IDEGRE (I9) Temperature units. If °C, and radiation is involved enter 1; otherwise leave blank.		Card 4 (3.5.4)
EPI (E9.8) Steady state convergence criterion. (Recommend 10-5)	BETA (E9.8) Steady state over-relaxation factor $1.0 \le \beta < 2.0$ (Recommend 1.9)	DELTAT (E9.8) Time increment for transient problem.	KTIFCT (I9) Factor by which stable time increment is increased if modified method is used.	TIM (E9.8) Initial time. (See section 3.5.5(a) for more info.)	TIME (E9.8) Final time.			Card 5 (3.5.5)
NOREG (I9) Region number. Maximum 100	MATL (I9) Region material number. (Card M)	RRIN (E9.8) Smaller X or R region dimension.	RROT (E9.8) Larger X or R region dimension.	THLT (E9.8) Smaller Y or θ region dimension.	THRT (E9.8) Larger Y or θ region dimension.	ZZBK (E9.8) Smaller Z region dimension.	ZZFR (E9.8) Larger Z region dimension.	R1
INTEM (I9) Region initial temperature function number. (Card I)	NGEN (I9) Region heat generation function number. (Card G)	NBDIN (I9) Boundary condition on smaller X or R. (Card B)	NBDOT (I9) Boundary condition on larger X or R. (Card B)	NBDLT (I9) Boundary condition on smaller Y or θ. (Card B)	NBDRT (I9) Boundary condition on larger Y or θ. (Card B)	NBDBK (I9) Boundary condition on smaller Z. (Card B)	NBDFR (I9) Boundary condition on larger Z. (Card B)	R2 — Coupled (section 3.5.6)
MAT (I9) Material number. Maximum 50	Blank MATNAM (A8) Material name.	CONDTY (E9.8) CONDUCTIVITY if constant; if temperature dependent, leave blank.	DENSTY (E9.8) DENSITY if constant; if temperature dependent or steady state only, leave blank.	SPHEAT (E9.8) SPECIFIC HEAT if constant; if temperature dependent or steady state only, leave blank.	NCON (I9) Number of pairs in C cards. Leave blank and omit C cards if constant. Maximum 25	NDEN (I9) Number of pairs in D cards. Leave blank and omit D cards if constant or steady state. Maximum 25	NSHT (I9) Number of pairs in S cards. Leave blank and omit S cards if constant or steady state. Maximum 25	M
T_1 (E9.8) Temperature	V_1 (E9.8) Conductivity	T_2 (E9.8) Temperature	V_2 (E9.8) Conductivity	(Can be repeated for up to 25 pairs. Omit for constant conductivity.)				C
T_1 (E9.8) Temperature	V_1 (E9.8) Density	T_2 (E9.8) Temperature	V_2 (E9.8) Density	(Can be repeated for up to 25 pairs. Omit for constant density or steady state problem.)				D
T_1 (E9.8) Temperature	V_1 (E9.8) Specific heat	T_2 (E9.8) Temperature	V_2 (E9.8) Specific heat	(Can be repeated for up to 25 pairs. Omit for constant specific heat or steady state problem.)				S — Cards M,C,D, and S are coupled (3.5.7)
NGN (I9) Heat generation function number. Maximum 20	NGNTM (I9) Time dependent function number. (Card T)	NGNR (I9) Position dependent function number in X or R direction. (Card P)	NGNTH (I9) Position denendent function number in Y or θ direction. (Card P)	NGNZ (I9) Position dependent function number in Z direction. (Card P)	NOTE: The heat generation will be $\sigma(x,y,z,t) = F_i(x)\cdot F_j(y)\cdot F_k(z)\cdot T_\ell(t)$ where $F_m(v)$ are position denendent functions, and $T_\ell(t)$ is ℓth time dependent function.			G (3.5.8)
INTM (I9) Initial temperature function number. Maximum 25	ITMR (I9) Position dependent function number in X or R direction. (Card P)	ITMTH (I9) Position dependent function number in Y or θ direction. (Card P)	ITMZ (I9) Position denendent function number in Z direction. (Card P)	NOTE: The initial temperature will be $T_o(x,y,z) = F_i(x)\cdot F_j(y)\cdot F_k(z)$ where $F_m(v)$ are position dependent functions.				I (3.5.9)
NFN (I9) Position dependent function number. Maximum 50	NPAR (I9) Number of coefficients in P2 cards. Maximum 9	NOTE: P1 and P2 establish the position dependent function in the form $F_m(v) = A_{m,1} + A_{m,2}V + A_{m,3}V^2 + A_{m,4}\cos(A_{m,5}V) + A_{m,6}\exp(A_{m,7}V) + A_{m,8}\sin(A_{m,9}V)$ where V is x, y, or z.						P1 — Coupled (3.5.10)
NOPARM (I9) Coefficient index. i	DUMMY (E9.8) Coefficient value. $A_{m,i}$	NOPARM (I9) Coefficient index. i	DUMMY (E9.8) Coefficient value. $A_{m,i}$	NOTE: Can be repeated for up to 9 coefficients.				P2
NTM (I9) Time dependent function number. Maximum 20	NTIMFP (I9) Number of pairs in table. Maximum 25	TIMFN (E9.8) Time.	TIMFN (E9.8) Factor.	TIMFN (E9.8) Time.	TIMFN (E9.8) Factor.	TIMFN (E9.8) Time.	TIMFN (E9.8) Factor.	T1
TIMFN (E9.8) Time.	TIMFN (E9.8) Factor.	NOTE: Can be repeated for up to 25 pairs. This establishes the time dependent function in the form $T_\ell(t)$.						T2 — Coupled (3.5.11)
NBDTP (I9) Boundary number. Maximum 50	NBYTYP (I9) Boundary Type. 1-surface to boundary 2-isothermal 3-surface to surface	BYTEMP (E9.8) Boundary temperature. T_n (Blank for type 3)	NBYTFN (I9) Boundary time dependent function number. (Card T) (Blank for type 3)	Boundary temperature will be established as $F_n(t) = T_n\cdot T_\ell(t)$ where $T_\ell(t)$ is time dependent function.				B1
BHCONV (E9.8) Forced convection film coefficient. h_c	BHRAD (E9.8) Radiation coefficient. $h_r = F\cdot\sigma$	BHNAT (E9.8) Natural convection coefficient. h_n	BHEXP (E9.8) Natural convection exponent. h_e	BFLUX (E9.8) Prescribed heat flux (positive if going to surface). h_f	NOTE: The heat flux will be established as: $q'' = h_f + h_c\Delta T + h_r(T_1^4 - T_2^4) + h_n\lvert\Delta T\rvert^{h_e}(\Delta T)$ where $\Delta T = T_1 - T_2$.			B2 — Coupled (3.5.12)
RG (E9.8) Smallest X or R gross lattice line dimension.	RG (E9.8) Next X or R gross lattice line dimension.	RG (E9.8) Next X or R gross lattice line dimension.	Can be repeated for up to 50 gross lattice lines (but equal to entry one in Card 2).					L1 (3.5.13)
NDRG (I9) Number of DIVISIONS between corresponding X or R gross line and the following line.	NDRG (I9)	NDRG (I9)	Must have one less entry than in L1 cards (maximum of 100 fine lattice lines in each direction).					N1 (3.5.13)
THG (E9.8) Y or θ	Same as L1 cards except for Y or θ direction.							L2 (3.5.13)
NDTHG (I9) Y or θ	Same as N1 cards except for Y or θ direction.							N2 (3.5.13)
ZG (E9.8) Z	Same as L1 cards except for Z direction.							L3 (3.5.13)
NDZG (I9) Z	Same as N1 cards except for Z direction.							N3 (3.5.13)
PRTIME (E9.8) First time printout is desired.	PRTIME (E9.8) Second time printout is desired.	PRTIME (E9.8) Third time printout is desired.	Can be repeated for up to 100 printout times (but equal to entry six in Card 4).					Ø (3.5.14)

Job Description, Format 18A4										IT1 (3.5.15)
Columns 1-5	Columns 6-15	Columns 16-20	Columns 21-30	Columns 31-35	Columns 36-45	Columns 46-50	Columns 51-60	Columns 61-65	Columns 66-75	Columns 76-80
N(I5) Lattice point number.	T1(N) (D10.0) Specified initial temperature of that point.	N(I5) Lattice point number.	T1(N) (D10.0) Specified initial temperature of that point.	Can be reneated up to 1750 lattice points (but equal to entry 5 in Card 3).						IT2 (3.5.15)

Blank card if additional problem follows.

Cards for additional problem if desired.

Appendix D. Application of CHART to a Research or Production Type Reactor

In this application of the procedure for estimating the temperature distribution in a charcoal adsorber, a different type of reactor system is considered. The previous examples (Section V) were based on a pressurized-water power reactor but in this case we imagine a hypothetical reactor system which more nearly fits the specifications of research reactors or some of the production reactor systems. Two major differences are evident: first is the much lower reactor power and consequently less charcoal area in the adsorber and secondly, the latter type drives air continuously through the filters and out the stack rather than recirculating the exit air back into the containment building.

A second purpose of this application is to provide a step-by-step example of applying the calculational procedure which begins with the basic equation and ends with the data cards to be punched in order to run the program.

The two basic equations used in calculating the temperature distribution in the charcoal adsorber are:

$$\rho_b C_{p_b} \frac{\partial T_b}{\partial t} = k_b \left[\frac{\partial^2 T_b}{\partial x^2} + \frac{\partial^2 T_b}{\partial y^2} + \frac{\partial^2 T_b}{\partial z^2}\right] + q''' - H(T_b - T_g) \qquad \text{(D-1)}$$

and

$$\rho_g C_{p_g} v_g \frac{\partial T_g}{\partial x} = H(T_b - T_g). \qquad \text{(D-2)}$$

from which the value of t_g may be determined.

The heat generation term in Eq. (D-1) is developed on page 16 of the text and in the general form becomes:

$$q'''(x) = \frac{FP(t)}{V_b} (a_i + fg_i) e^{-\lambda_i (t + tD)} \text{ Btu/min-in.}^3 \qquad \text{(D-3)}$$

The heat generated by the decay of the iodine is considered in two parts; that generated by beta adsorption (ai) and the gamma adsorption (g_i). Because of the penetration of the gamma rays the heat produced by their adsorption is considered to be uniform throughout the charcoal volume. Beta radiation, however, is adsorbed in the immediate vicinity

where it is produced. Most of the elemental iodine is deposited on the air inlet side of the bed and the part of the iodine which becomes CH_3I is less concentrated. For this reason the iodine deposit for beta heat generation must be considered in more detail as outlined on page 17 of the text. This is reflected in the following equation:

$$q_i''' (x,t) = \frac{F_1 P(t)}{V_b} [(\frac{\beta_1 b_1 \ell}{1 - e^{-b_1 \ell}} e^{-b_1 x} + \frac{\beta_2 b_2 \ell}{1 - e^{-b_2 \ell}} e^{-b_2 x}) a_i$$

$$+ F_2 g_i] e^{-\lambda_i (t+t_D)} \text{ Btu/min-in.}^3. \qquad \text{D-4}$$

where the two terms in parentheses represent the location of the elemental methyl iodide, respectively. For any particular reactor system these terms are constant and are given the designation B_1 and B_2. The terms are expressed here and are calculated for this particular problem on page 85.

$$B_1 = \frac{P(t) \ell \beta_1 b_1}{V_b (1 - e^{-b_1 \ell})}$$

$$B_2 = \frac{P(t) \ell \beta_2 b_2}{V_b (1 - e^{-b_2 \ell})}$$

The terms representing the gamma heat generation is

$$G = \frac{P(t)}{V_b} f$$

At this point q''' is calculated as a function of time and position in the charcoal. If we wish to include the practical consideration, that the iodine accumulates on the charcoal over a period of time depending on air flow rate we need to add a term which determines the fraction of the total iodine that has been adsorbed at any time (see page 18 of text).

Fraction of total iodine adsorbed $= 1 - e^{-(aRT/V)}$

Including this factor and summing the heat generation due to all the individual isotopes of iodine, we have:

$$q'''(x,t) = F_1[(B_1 e^{-b_1 x} + B_2 e^{-b_2 x}) \sum_{i=1}^{m} a_i e^{-\lambda_i (t+t_D)}$$

$$+ G \sum_{i=1}^{m} g_i e^{-\lambda_i (t+t_D)}] (1 - e^{-(aR/vt)} \qquad \text{(D-5)}$$

where

$q'''(x,t)$ = heat generation rate per unit volume of charcoal bed,

x = distance from front face of charcoal bed in direction of gas flow

t = time elapsed from beginning of iodine adsorption by the charcoal bed

t_D = time delay between end of fissioning and beginning of iodine adsorption

a = fraction of iodine removed from the air as it passes through the charcoal (assumed here to be 0.9)

R = gas flow rate, ft^3/min

V = volume of containment vessel

b_1 = attenuation coefficient for iodine

b_2 = attenuation coefficient for methyl iodide

F_1 = fraction of total iodine adsorbed by the charcoal filter.

In order to calculate the constants needed for the heat generation part of the computer code the data listed in Table D-1 is required.

Table D-1. Data for Calculating the Temperature Distribution in the Charcoal Adsorber of the Hypothetical Production Reactor System

Specifications of the Reactor System	
Reactor Power	350 Mw(t)
Charcoal Adsorber	
Area of charcoal	600 ft^2
Thickness of charcoal	2 in. (1)
Volume of charcoal	100 ft3(1.7280 x 10^5 in.^{3})(V_b)
Normal air velocity	40 ft/min (R)
Containment volume	451,880 ft^3 (V)
Other Constants	
β_1 = 0.9 (fraction of I_2)	
β_2 = 0.1 (fraction of CH_3I)	
b_1 = 9.2104 1/n (I_2 attenuation coefficient)	
b_2 = 1.0234 1/n (CH_3I attenuation coefficient)	

Time elapse between reactor shutdown and beginning of iodine adsorption = 10 min

a = 0.99 (fraction of iodine adsorbed as the air passes through the charcoal)

Calculation of Input Data for Computer Program

$$B_1 = \frac{P(t)}{V_b} \left(\frac{\beta_1 b_1 \ell}{1 - e^{-b_1 \ell}}\right) = \frac{350}{1.7280 \times 10^5} \times \frac{0.9 \times 9.2104 \times 2}{1 - e^{-(9.2104 \times 2)}} = 3.3578 \times 10^{-2}$$

$$B_2 = \frac{P(t)}{V_b} \left(\frac{\beta_2 b_2 \ell}{1 - e^{-b_2 \ell}}\right) = \frac{350}{1.7280 \times 10^5} \times \frac{0.1 \times 1.0234 \times 2}{1 - e^{-(1.0234 \times 2)}} = 4.7608 \times 10^{-4}$$

$$G = \frac{P(t)}{V_b} \; 0.5 = 1.0127 \times 10^{-3}$$

The terms a_i and g_i in Eq. (D-5) refer to the fraction of the decay power of the iodine which is due to beta and gamma, respectively. They are calculated for each isotope and the dimensions are Btu/min-Mw(t). A sample calculation for ^{131}I is as follows: (refer to Table D-2 for decay power of iodine isotopes at reactor shutdown).

$$a_i(^{131}I) = 118 \text{ watts/Mw(t)} \times 0.0569 \frac{\text{Btu/min}}{\text{watt}} (0.426) \text{ (fraction for beta)}$$

$$g_i(^{131}I) = 118 \text{ watts/Mw(t)} \times 0.0569 \frac{\text{Btu/min}}{\text{watt}} (0.0574) \text{ (fraction for gamma)}$$

$$= 3.8540 \frac{\text{Btu/min}}{\text{Mw(t)}} \; .$$

Corresponding values for all the isotopes and the decay constant are listed in Table D-3.

Table D-2. Constants for Iodine Isotopes Produced in a Reactor

Iodine Isotope	Decay Constant (sec^{-1})	(min^{-1})	Fraction of Decay Heat Due to Beta	Gamma	Watts/Mw(t) of Reactor Power Discharge	From Beta	From Gamma
127					0.0		
128	4.62E-04	2.77E-02	0.827	0.173	1.99E-00		
129	1.29E-15	7.74E-14	1	0.0	5.37E-07	5.37E-07	
130m	1.26E-03	7.56E-02	1	0.0	2.34E-01	2.43E-01	
130	1.55E-05	9.30E-04	0.220	0.780	9.97E-00	2.19E 00	7.78E 00
131	9.97E-07	5.98E-05	0.426	0.574	1.18E 02	5.03E 00	6.77E 01
132	8.37E-05	5.02E-03	0.220	0.780	6.55E 02	1.44E 02	5.11E 02
133	9.17E-06	5.50E-04	0.490	0.510	3.50E 02	1.72E 02	1.79E 02
134	2.19E-04	1.31E-02	0.186	0.814	1.18E 03	2.19E 02	9.61E 02
135	2.87E-05	1.72E-03	0.160	0.840	6.45E 02	1.03E 02	5.42E 02
136	8.35E-03	5.01E-01	0.480	0.520	5.10E 02	2.45E 02	2.65E 02
137	3.06E-02	1.84E-00	1	0.0	5.43E 01	5.43E 01	
138	1.17E-01	7.02E-00	1	0.0	1.02E 03	1.02E 03	
139	3.47E-01	2.08E-01	1	0.0	4.91E 02	4.91E 02	
					5.04E 03	2.50E 03	2.53E 03

Table D-3. Decay Power for the Iodine Isotopes

Iodine Isotope	a_i Btu/min/Mw(t)	g_i Btu/min/Mw(t)	λ_i Decay Constant, 1/min
128	0.0936	0.0196	2.7667×10^{-2}
130	0.1248	0.4425	9.2562×10^{-4}
131	2.8602	3.8540	5.9795×10^{-5}
132	8.1992	29.0702	5.0245×10^{-3}
133	9.7584	10.1569	5.5005×10^{-4}
134	12.4884	54.6539	1.3079×10^{-2}
135	5.8720	30.8284	1.7253×10^{-3}

The last term of Eq. (D-5), which determines the fraction of the total iodine adsorbed, is calculated by the computer using values of air velocity and time which are specified in the data cards. Therefore, the exponential is expressed in these terms by substituting for R:

R = air velocity (v) x area of charcoal bed

so that we have $1 - e^{-(a \times 600\ vt/v)}$. Substituting values from Table D-1 gives

$$1 - e^{-\left[\frac{0.99 \times (600 \times 144)\ \text{in.}^2 vt}{451.880 \times 1728\ \text{in.}^3}\right]}$$

or

$$1 - e^{-1.0954 \times 10^{-4}\ vt}$$

The figure 1.0954×10^{-4} is the first entry in data card (c) and is referred to as the buildup coefficient (BUCOEF). To assume instant loading of the iodine on the charcoal the factor 10^{-4} can be changed to 10^{4} and the fraction will always be one.

The information needed to punch the cards for this problem is listed in Table C-1 (Appendic C). These cards are punched as indicated in Table D-4 and placed in the order listed at the end of the main deck. If it is desired to run more than one case, a second data deck is prepared with the necessary changes and placed after the first data deck with one blank card separating them. The last two cards shown on the Fortran Sheet (Table D-4) appear only once (after the last case).

Samples of the output for this problem are shown in Table D-5. Figure D-1 is a plot of maximum temperature vs time for air flows of 4, 20 and 40 ft/min. The temperature represented in this graph assumes that the available iodine is adsorbed immediately at time 0. Tables D-6 and D-7 are samples of the printout of variables that are associated with each problem.

Table D-4. Data Deck which was Used to Make the Calculation of Temperature Distribution with Instant Loading and Air Flow 4 ft/min.

CODED BY _____ PROBLEM _____

DATE _____ REQUEST NO. _____ PROGRAM _____

FORTRAN

PAGE _____ OF _____

STATEMENT TYPE | NUMBER | CONT | FORTRAN STATEMENT | IDENTIFICATION

```
  3.3579D-02  4.7608D-04  1.0127D-03  9.2104D 00  1.0234D 00  0.2500D 00   A
     0.0D 00  3.4722D-05  2.4000D-01  0.0625D 00                           B
 1.0954D 04     10.0D 00    48.0D 01    48.0D 01                           C
     9.3640D-02     1.9590D-02     2.7667D-02                              D1
     1.2480D-01     4.4249D-01     9.2562D-04                              D2
     2.8602D 00     3.8540D 00     5.9795D-05                              D3
     8.1992D 00     2.9070D 01     5.0245D-03                              D4
     9.7584D 00     1.0157D 01     5.5005D-04                              D5
     1.2488D 01     5.4654D 01     1.3079D-02                              D6
     5.8720D 00     3.0828D 01     1.7253D-03                              D7
CHARCOAL ADSORBER TEMP.CALCULATION  FOR 40FT/MIN INSTANT LOADING            1
        9        1        1        1        2        1                     2
        2                                                                   3
       -1                                          48                       4
                 1    0.020        5      0.0    200.0                      5
        1        1      0.0      2.0                                       R1
        1 CHAR     1.667D-04 2.026D-02                                  2
-1.0E+20     0.20  1.0E+20     0.20
        1                 1
```

Table D-4 (continued)

CODED BY _____

DATE _____ REQUEST NO. _____

FORTRAN

PROBLEM _____

PROGRAM _____

PAGE _____ OF _____

STATEMENT TYPE	STATEMENT NUMBER	CONT	FORTRAN STATEMENT	IDENTIFICATION
1	2 3 4 5	6	7 8 9 10 11 12 13 14 15 16 17 18 19 20 21 22 23 24 25 26 27 28 29 30 31 32 33 34 35 36 37 38 39 40 41 42 43 44 45 46 47 48 49 50 51 52 53 54 55 56 57 58 59 60 61 62 63 64 65 66 67 68 69 70 71 72	73 74 75 76 77 78 79 80

```
      1       2
      1       1
      1     1.0
      2       1
      1     0.0
    0.0     2.0
     32
    0.0     2.0     4.0     6.0     8.0    10.0    12.0    14.0
   16.0    18.0    20.0    22.0    24.0    26.0    28.0    30.0
   32.0    34.0    36.0    38.0    40.0    42.0    44.0    46.0
   48.0    50.0    55.0    60.0    65.0    70.0    75.0    80.0
   90.0   100.0   110.0   120.0   130.0   140.0   150.0   160.0
  170.0   180.0   200.0
/*
//
```

UCN-1853A (23 10-63)

Table D-5. Printout of the Temperature Profile of the Charcoal Filter 8 min after Iodine was Deposited

RESULTS FROM TRANSIENT CALCULATIONS

TIME = 8.08557D 00 TIME STEPS COMPLETED = 39

LATTICE POINT NO.	INDICIES I	J	K	TEMPERATURES POINT TEMPERATURE	LATTICE POINT NO.	INDICIES I	J	K	TEMPERATURES POINT TEMPERATURE	LATTICE POINT NO.	INDICIES I	J	K	TEMPERATURES POINT TEMPERATURE	LATTICE POINT NO.	INDICIES I	J	K	TEMPERATURES POINT TEMPERATURE
1	1	1	1	110.95428															
2	2	1	1	130.14768															
3	3	1	1	138.93338															
4	4	1	1	145.90100															
5	5	1	1	150.25696															
6	6	1	1	152.24003															
7	7	1	1	151.65524															
8	8	1	1	148.52993															
9	9	1	1	142.92464															
10	10	1	1	135.29836															
11	11	1	1	126.20796															
12	12	1	1	116.45096															
13	13	1	1	106.75148															
14	14	1	1	97.74760															
15	15	1	1	89.85529															
16	16	1	1	83.26878															
17	17	1	1	78.00382															
18	18	1	1	73.94074															
19	19	1	1	70.90143															
20	20	1	1	68.68405															
21	21	1	1	67.05923															
22	22	1	1	65.98222															
23	23	1	1	65.20000															
24	24	1	1	64.65049															
25	25	1	1	64.25931															
26	26	1	1	63.97456															
27	27	1	1	63.76167															
28	28	1	1	63.59864															
29	29	1	1	63.47230															
30	30	1	1	63.37552															
31	31	1	1	63.30526															
32	32	1	1	63.26141															
33	33	1	1	63.24613															

Note: Points 1 and 33 indicate the temperature of the air inlet and outlet, respectively, of the charcoal filter.

Table D-6. Variables which can be Changed without Altering the Computer Code and Which are Printed out with Each Problem.

BIGB1	BIGB2	BIGG	SMLB1	SMLB2	ESCFCT
0.335790D-01	0.476080D-03	0.101270D-02	0.921040D 01	0.102340D 01	0.250000D 00

GIT	GDEN	GSPH	DELX	DIMA	DIMB
0.0	0.347220D-04	0.240000D 00	0.625000D-01	0.0	0.0

BUCDEF	TMDLAY	BGGVEL	ACGVEL	BGH	ACH
0.109540D 05	0.100000D 02	0.480000D 02	0.480000D 02	0.180763D-01	0.180763D-01

AA(I)	GG(I)	LAMBDA(I)
0.936400D-01	0.195900D-01	0.276670D-01
0.124800D 00	0.442490D 00	0.925620D-03
0.286020D 01	0.385400D 01	0.597950D-04
0.819920D 01	0.290700D 02	0.502450D-02
0.975840D 01	0.101570D 02	0.550050D-03
0.124880D 02	0.546540D 02	0.130790D-01
0.587200D 01	0.308280D 02	0.172530D-02

Table D-7. A Printout of Variables for the Heat Transfer Section of Computer Code.

```
THE HEATING CODE WITH TEMPERATURE-DEPENDENT THERMAL PROPERTIES AND
NON-LINEAR AND SURFACE-TO-SURFACE BOUNDARY CONDITIONS.
THIS VERSION OF HEATING CAN HANDLE A MAXIMUM OF   1750 LATTICE POINTS.
INPUT RETURN
  JOB DESCRIPTION-- CHARCOAL ADSORBER--RECHECK OF DECK 4 FT/MIN FACTOR 20 12/2/73
  GEOMETRY TYPE NO.     9
  NUMBER OF REGIONS      1
  NUMBER OF MATERIALS      1
  NUMBER OF INITIAL TEMPERATURE FUNCTIONS      1
  NUMBER OF GENERAL POSITION DEPENDENT FUNCTIONS       2
  NUMBER OF HEAT GENERATION FUNCTIONS     1
  NUMBER OF TIME DEPENDENT FUNCTIONS     0
  TYPE OF OUTPUT DESIRED     0
  NUMBER OF POINTS IN GROSS X OR R LATTICE     2
  NUMBER OF POINTS IN GROSS Y OR THETA LATTICE     0
  NUMBER OF POINTS IN GROSS Z LATTICE     0
  NUMBER OF DIFFERENT KINDS OF BOUNDARIES     0
  NUMBER OF LATTICE POINTS FOR WHICH THE INITIAL TEMPERATURES ARE ENTERED     0
  PROBLEM TYPE NUMBER     -1
  MAXIMUM NUMBER OF STEADY-STATE ITERATIONS     0
  NUMBER OF S-S ITERATIONS BEFORE CALC BETA     0
  NUMBER OF S-S ITERATIONS BEFORE EXTRAPOLATION     0
  NUMBER OF DELTATS PER MONITOR PRINT     0
  NUMBER OF TRANSIENT PRINTOUTS SPECIFIED     8
  THE CONDUCTIVITY, DENSITY, AND HEAT CAPACITY ARE TEMPERATURE DEPENDENT.
  CONVERGENCE CRITERION  0.0
  INITIAL BETA  1.85999962
  TIME INCREMENT  3.9000000D-02
  NUMBER OF STABLE TIME STEPS UNTIL MODIFIED EXPLICIT METHOD IS ACTIVATED   20
  INITIAL TIME  0.0
  FINAL TIME  1.4000000D 01
```

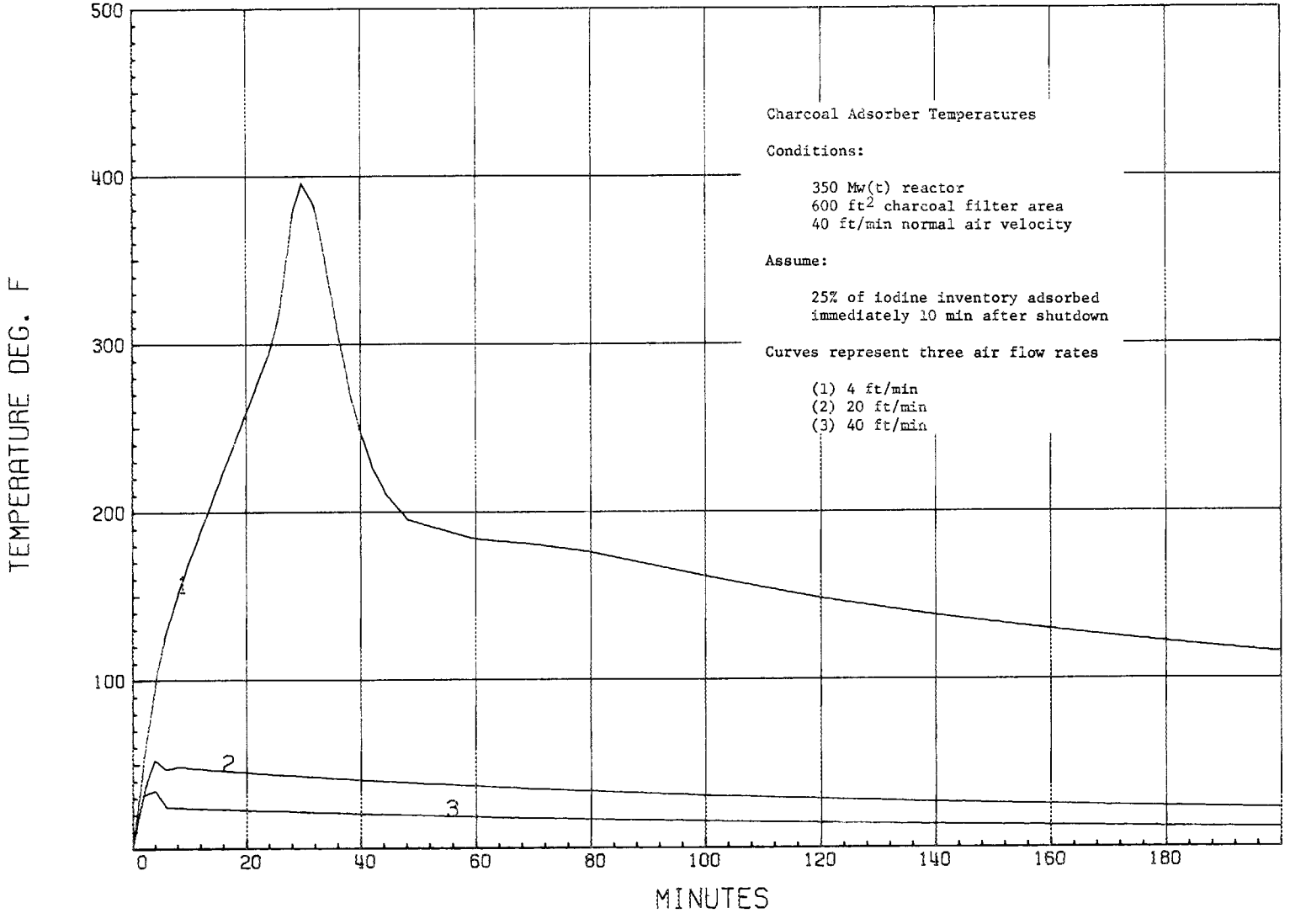

Figure D-1. Max Temperature vs Time For Various Air Flow Rates

Appendix E. STACK: An XTRAN Computer Program for Calculating Stack Parameter vs Fraction of Decay Heat Removed from Charcoal Adsorbers.

```
WRITE (1,99)
99 F'T(10/,$PRØGRAM STACK, REVISED 10/01/70$)
WRITE (1,100)
100 F'T($STACK DIAS. (FEET), MIN,MAX,INCRIMENT = $,Z)
A'T D1,D2,D3
WRITE (1,101)
101 F'T($STACK HEIGHTS (FEET) MIN, MAX,INCRIMENT = $,Z)
A'T Z1,Z2,Z3
WRITE (1,102)
102 F'T($CØNTAINMENT AMB. TEMP. (DEG F) MIN,MAX,INC = $,Z)
A'T T1,T2,T3
WRITE (1,103)
103 F'T($TØTAL HEAT IN CHARCØAL BED (KW) = $,Z)
A'T QT
DISPLAY /,/,/,/,/,/
WRITE (1,215)
WRITE (1,216)
WRITE (1,217)
WRITE (1,218)
215 F'T($AMB.   DIAMET   HEIGHT   BED        STACK      STACK
    FRACTIØN$)
216 F'T($TEMP   STACK    STACK    VELØCITY   VELØCITY   DP
       ØF HEATS)
217 F'T($DEGF   FEET     FEET     FEET/MIN   FEET/MIN   IN
/H2Ø   (RATIØ)$)
218 F'T($****   ******   ******   ********   ********
   ******   ********$)
DISPLAY /
DØ 18 TA=T1,T2,T3
DØ 16 DS=D1,D2,D3
DØ 17  Z=Z1,Z2,Z3
Q = QT*3413.
DA = 39.675/(TA+460.)
TAVG = 0.5*(475. + TA)
DAVG = 39.675/(TAVG + 460.)
DPC = (DA-0.042433)*Z/5.1972
CU = 0.0
C = -.1
4 C = C + 0.1
5 CØNTINUE
CALL SPH (TAVG,CPA)
W = C*Q/(CPA*(475.-TA))
C5 = 168000.*DAVG*CPA*(475.-TA)
VB = C*Q/C5
VS = (.500095*W)/(DS*DS)
VD=207.4074*VB
CALL REYN(TAVG,DAVG,VD,RED)
RED=0.947*RED
CALL REYN(TAVG,DAVG,VB,REB)
RES = 38.3836*VS*DS
```

```
IF(RED.LT.1500.) FD=16./RED
IF(RED.GT.1500..AND.RED.LE.3000.)FD= .011
IF(RED.GT.3000.)FD=.0014+.125/(RED**.32)
DPD= .00002825*FD*VD*VD*DAVG
IF(RES.LE.1500.) FS = 16./RES
IF (RES.GT.1500..AND.RES.LE.3000.) FS = .011
IF (RES.GT.3000.) FS = .0014 + .125/(RES**.32)
DPS =( 1.4104E-7*VS*VS*Z*FS/DS) + ( 5.2882E-8*VS*VS)
IF(REB.LE.400.) FB = 24000./REB
IF(REB.GT.400..AND. REB.LE.3000.) FB = 2601.75/(REB**.629)
IF(REB.GT.3000.) FB = 99.375/(REB**.225)
DPB = .00010692*FB*VB*VB*DAVG + .00002704*VB*VB*DAVG
DPT = DPB + DPS + DPD
IF(DPT.GT.DPC) GØ TØ 6
CL = C
DPTL =DPT
IF(CU.EQ.0.0) GØTØ 4
GØ TØ 7
6 CU = C
DPTU = DPT
7 FR = (ABS(DPT-DPC))/DPC
IF(FR.LT.0.000001) GØ TØ 25
C = (CU + CL)/2.
GØ TØ 5
25 WRITE(1,205) TA,DS,Z,VB,VS,DPT,C
205 F'T(1X,I3,3X,F6.3,3X,F6.2,3X,F8.3,3X,F8.3,3X,F6.4,3X,F6.4)
17 CØNTINUE
16 CØNTINUE
18 CØNTINUE
END
SUBRØUTINE REYN(X,DAVG,VB,REB)
IF(X.LE.0.0) VIS = .03939
IF((X.GT.0.0).AND.(X.LE.100.)) VIS=.03939 + .0000655*(100.-X)
IF((X.GT.100.).AND.(X.LE.200.)) VIS= .04594 +
.0000599*(200.-X)
IF((X.GT.200.).AND.(X.LE.300.))
VIS = .05193 + .0000555*(300.-X)
IF((X.GT.300.).AND.(X.LE.400.))
VIS = .05748 + .0000518*(400.-X)
IF((X.GT.400.).AND.(X.LE.475.))
VIS = .06266 + .000048933*(475.-X)
IF(X.GT.475.) VIS = .06633
IF(X.GT.475.) WRITE (1,295)
295 F'T($STUPID, YØUR AMBIENT TEMP IS GREATER THAN THE
IGNITIØN TEMP JF YØUR CHARCØAL BED$)
DB= .00517
REB = DB*2880.*VB*DAVG/VIS
RETURN
END
SUBRØUTINE SPH (Y,CPA)
IF(Y.LE.100.) CA = .2406
IF((Y.GT.100.).AND.(Y.LE.200.)) CPA=.2406 + .000009*(Y-100.)
IF((Y.GT.200.).AND.(Y.LE.300.)) CPA=.2415 + .000016*(Y-200.)
IF((Y.GT.300.).AND.(Y.LE.400.)) CPA=.2431 + .000021*(Y-300.)
IF((Y.GT.400.).AND.(Y.LE.475.)) CPA=.2452 + .000025*(Y-400.)
RETURN
END
*?
```

PRØGRAM STACK, REVISED 10/01/70
STACK DIAS. (FEET), MIN,MAX,INCRIMENT = 1 4 0.5
STACK HEIGHTS (FEET) MIN, MAX,INCRIMENT = 5 100 5
CØNTAINMENT AMB. TEMP. (DEG F) MIN,MAX,INC = 100 100 0
TØTAL HEAT IN CHARCØAL BED (KW) = 732

AMB. TEMP DEGF ****	DIAMET STACK FEET ******	HEIGHT STACK FEET ******	BED VELØCITY FEET/MIN ********	STACK VELØCITY FEET/MIN ********	STACK DP IN/H2Ø ******	FRACTIØN ØF HEAT (RATIØ) ********
100	1.000	5.00	0.151	672.618	0.0273	0.0490
100	1.000	10.00	0.208	929.459	0.0547	0.0678
100	1.000	15.00	0.249	1110.755	0.0820	0.0810
100	1.000	20.00	0.281	1252.407	0.1093	0.0913
100	1.000	25.00	0.307	1368.683	0.1367	0.0998
100	1.000	30.00	0.329	1467.040	0.1640	0.1070
100	1.000	35.00	0.348	1551.969	0.1914	0.1131
100	1.000	40.00	0.365	1626.419	0.2187	0.1186
100	1.000	45.00	0.380	1692.455	0.2460	0.1234
100	1.000	50.00	0.393	1751.581	0.2734	0.1277
100	1.000	55.00	0.405	1804.933	0.3007	0.1316
100	1.000	60.00	0.416	1853.393	0.3280	0.1351
100	1.000	65.00	0.426	1897.654	0.3554	0.1383
100	1.000	70.00	0.435	1938.281	0.3827	0.1413
100	1.000	75.00	0.443	1975.734	0.4101	0.1440
100	1.000	80.00	0.451	2010.391	0.4374	0.1466
100	1.000	85.00	0.458	2042.571	0.4647	0.1489
100	1.000	90.00	0.465	2072.547	0.4921	0.1511
100	1.000	95.00	0.471	2100.546	0.5194	0.1531
100	1.000	100.00	0.477	2126.765	0.5467	0.1551
100	1.500	5.00	0.333	660.022	0.0273	0.1083
100	1.500	10.00	0.470	932.329	0.0547	0.1529
100	1.500	15.00	0.570	1130.535	0.0820	0.1854
100	1.500	20.00	0.651	1289.722	0.1093	0.2116
100	1.500	25.00	0.718	1423.714	0.1367	0.2335
100	1.500	30.00	0.777	1539.686	0.1640	0.2526
100	1.500	35.00	0.828	1641.965	0.1914	0.2693
100	1.500	40.00	0.875	1733.402	0.2187	0.2843
100	1.500	45.00	0.916	1816.004	0.2460	0.2979
100	1.500	50.00	0.954	1891.239	0.2734	0.3102
100	1.500	55.00	0.989	1960.227	0.3007	0.3215
100	1.500	60.00	1.021	2023.836	0.3280	0.3320
100	1.500	65.00	1.051	2082.799	0.3554	0.3417
100	1.500	70.00	1.079	2137.658	0.3827	0.3507
100	1.500	75.00	1.104	2188.877	0.4101	0.3591
100	1.500	80.00	1.129	2236.857	0.4374	0.3669
100	1.500	85.00	1.151	2281.925	0.4647	0.3743
100	1.500	90.00	1.173	2324.371	0.4921	0.3813
100	1.500	95.00	1.193	2364.434	0.5194	0.3879

100	1.500	100.00	1.212	2402.333	0.5467	0.3941
100	2.000	5.00	0.568	633.160	0.0273	0.1846
100	2.000	10.00	0.817	911.185	0.0547	0.2657
100	2.000	15.00	1.002	1117.215	0.0820	0.3258
100	2.000	20.00	1.153	1285.337	0.1093	0.3748
100	2.000	25.00	1.282	1428.773	0.1367	0.4167
100	2.000	30.00	1.394	1554.453	0.1640	0.4533
100	2.000	35.00	1.495	1666.570	0.1914	0.4860
100	2.000	40.00	1.586	1767.892	0.2187	0.5156
100	2.000	45.00	1.669	1860.360	0.2460	0.5425
100	2.000	50.00	1.745	1945.401	0.2734	0.5673
100	2.000	55.00	1.816	2024.104	0.3007	0.5903
100	2.000	60.00	1.881	2097.320	0.3280	0.6116
100	2.000	65.00	1.943	2165.731	0.3554	0.6316
100	2.000	70.00	2.000	2229.894	0.3827	0.6503
100	2.000	75.00	2.054	2290.270	0.4101	0.6679
100	2.000	80.00	2.105	2347.245	0.4374	0.6845
100	2.000	85.00	2.154	2401.150	0.4647	0.7002
100	2.000	90.00	2.200	2452.262	0.4921	0.7151
100	2.000	95.00	2.243	2500.835	0.5194	0.7293
100	2.000	100.00	2.285	2547.074	0.5467	0.7428
100	2.500	5.00	0.835	595.545	0.0273	0.2714
100	2.500	10.00	1.226	875.055	0.0547	0.3987
100	2.500	15.00	1.521	1085.045	0.0820	0.4944
100	2.500	20.00	1.763	1257.893	0.1093	0.5732
100	2.500	25.00	1.971	1406.590	0.1367	0.6409
100	2.500	30.00	2.155	1537.905	0.1640	0.7008
100	2.500	35.00	2.321	1655.912	0.1914	0.7545
100	2.500	40.00	2.471	1763.300	0.2187	0.8035
100	2.500	45.00	2.610	1861.952	0.2460	0.8484
100	2.500	50.00	2.738	1953.255	0.2734	0.8900
100	2.500	55.00	2.857	2038.263	0.3007	0.9288
100	2.500	60.00	2.968	2117.804	0.3280	0.9650
100	2.500	65.00	3.073	2192.541	0.3554	0.9990
100	2.500	70.00	3.172	2263.013	0.3827	1.0312
100	2.500	75.00	3.265	2329.670	0.4101	1.0615
100	2.500	80.00	3.354	2392.891	0.4374	1.0903
100	2.500	85.00	3.438	2452.994	0.4647	1.1177
100	2.500	90.00	3.518	2510.254	0.4921	1.1438
100	2.500	95.00	3.595	2564.912	0.5194	1.1687
100	2.500	100.00	3.668	2617.179	0.5467	1.1925
100	3.000	5.00	1.111	550.707	0.0273	0.3613
100	3.000	10.00	1.672	828.413	0.0547	0.5436
100	3.000	15.00	2.097	1039.074	0.0820	0.6818
100	3.000	20.00	2.450	1213.824	0.1093	0.7964
100	3.000	25.00	2.755	1365.143	0.1367	0.8957
100	3.000	30.00	3.026	1499.556	0.1640	0.9839
100	3.000	35.00	3.272	1620.998	0.1914	1.0636
100	3.000	40.00	3.496	1732.072	0.2187	1.1365
100	3.000	45.00	3.703	1834.599	0.2460	1.2038
100	3.000	50.00	3.895	1929.922	0.2734	1.2663
100	3.000	55.00	4.075	2019.061	0.3007	1.3248
100	3.000	60.00	4.244	2102.819	0.3280	1.3798
100	3.000	65.00	4.403	2181.838	0.3554	1.4316

100	3.000	70.00	4.554	2256.638	0.3827	1.4807
100	3.000	75.00	4.698	2327.659	0.4101	1.5273
100	3.000	80.00	4.834	2395.264	0.4374	1.5716
100	3.000	85.00	4.964	2459.764	0.4647	1.6140
100	3.000	90.00	5.089	2521.430	0.4921	1.6544
100	3.000	95.00	5.208	2580.491	0.5194	1.6932
100	3.000	100.00	5.322	2637.152	0.5467	1.7304
100	3.500	5.00	1.379	502.054	0.0273	0.4484
100	3.500	10.00	2.126	773.898	0.0547	0.6912
100	3.500	15.00	2.699	982.564	0.0820	0.8775
100	3.500	20.00	3.178	1156.939	0.1093	1.0333
100	3.500	25.00	3.595	1308.805	0.1367	1.1689
100	3.500	30.00	3.968	1444.370	0.1640	1.2900
100	3.500	35.00	4.306	1567.402	0.1914	1.3998
100	3.500	40.00	4.616	1680.390	0.2187	1.5007
100	3.500	45.00	4.904	1785.082	0.2460	1.5942
100	3.500	50.00	5.172	1882.773	0.2734	1.6815
100	3.500	55.00	5.424	1974.443	0.3007	1.7634
100	3.500	60.00	5.661	2060.865	0.3280	1.8405
100	3.500	65.00	5.886	2142.656	0.3554	1.9136
100	3.500	70.00	6.099	2220.321	0.3827	1.9829
100	3.500	75.00	6.303	2294.280	0.4101	2.0490
100	3.500	80.00	6.496	2364.886	0.4374	2.1121
100	3.500	85.00	6.682	2432.439	0.4647	2.1724
100	3.500	90.00	6.860	2497.198	0.4921	2.2302
100	3.500	95.00	7.031	2559.389	0.5194	2.2858
100	3.500	100.00	7.195	2619.205	0.5467	2.3392
100	4.000	5.00	1.622	451.964	0.0273	0.5272
100	4.000	10.00	2.563	714.353	0.0547	0.8333
100	4.000	15.00	3.295	918.471	0.0820	1.0714
100	4.000	20.00	3.912	1090.363	0.1093	1.2719
100	4.000	25.00	4.452	1240.914	0.1367	1.4475
100	4.000	30.00	4.937	1375.932	0.1640	1.6050
100	4.000	35.00	5.378	1498.960	0.1914	1.7485
100	4.000	40.00	5.785	1612.356	0.2187	1.8808
100	4.000	45.00	6.163	1717.780	0.2460	2.0038
100	4.000	50.00	6.517	1816.460	0.2734	2.1189
100	4.000	55.00	6.851	1909.333	0.3007	2.2272
100	4.000	60.00	7.166	1997.132	0.3280	2.3296
100	4.000	65.00	7.465	2080.453	0.3554	2.4268
100	4.000	70.00	7.749	2159.776	0.3827	2.5193
100	4.000	75.00	8.021	2235.502	0.4101	2.6077
100	4.000	80.00	8.281	2307.971	0.4374	2.6922
100	4.000	85.00	8.530	2377.468	0.4647	2.7733
100	4.000	90.00	8.770	2444.244	0.4921	2.8512
100	4.000	95.00	9.001	2508.511	0.5194	2.9261
100	4.000	100.00	9.223	2570.460	0.5467	2.9984
100	1.000	5.00	0.151	672.618	0.0273	0.0490
100	1.000	10.00	0.208	929.459	0.0547 ←	

ESC: ($MAIN$)205
+

REFERENCES

1. C. E.Miller and R. P. Shields, Ignition of Charcoal Adsorbers by Fission Product Decay Heat, USAEC Report ORNL-4071, Oak Ridge National Laboratory, December 1966.
2. R. P. Shields and C. E. Miller, "The Effects of Fission Products on Charcoal Ignition (In-Pile Experiment)," USAEC Report ORNL-TM-1739, January 1967, Oak Ridge National Laboratory.
3. R. P. Shields and R. E. Adams, "The Effects of Fission Products on Ignition of Iodized Charcoal (In-Pile Experiment IGR-3)," USAEC Report ORNL-TM-2321, December 1968, Oak Ridge National Laboratory.
4. R. P. Shields, "Ignition of Charcoal Adsorbers by Fission Product Decay Heat," Proceedings of the 11th Air Cleaning Conference, Hanford, Washington, Aug. 31-Sept. 3, 1970.
5. C. A. Burchsted and A. B. Fuller, "Design, Construction, and Testing of High Efficiency Air Filtration Systems for Nuclear Applications," USAEC Report ORNL-NSIC-65, January 1970, Oak Ridge National Laboratory.
6. C. R. Wilke and O. A. Hougen, "Mass Transfer in the Flow of Gases Through Granular Solids Extended to Low Modified Reynolds Numbers," Trans. AIChE, 41, 445-451 (1945).
7. B. W. Gamson, G. Thodos and O. A. Hougen,"Heat, Mass and Momentum Transfer in the Flow of Gases Through Granular Solids," Trans. AIChE, 39, 1-35 (1943).
8. L. K. McCune and R. H. Wilhelm, "Mass and Momentum Transfer in Solid-Liquid Systems (Fixed and Fluidized Beds)," Ind. Eng. Chem. (Industrial Edition), 41, 1124-1134 (1949).
9. J. E. Coppage, Ph.D. Thesis in Mechanical Engineering, Stanford University, 1952.
10. W. D. Turner and J. S. Crowell, "Notes on HEATING - An IBM 360 Heat Conduction Program," Computing Technology Center Report CTC-INF-980, November 1969, Oak Ridge Gaseous Diffusion Plant.
11. W. D. Turner and M. Siman-Tov, "HEATING3 - An IBM 360 Heat Conduction Program," USAEC Report ORNL-TM-3208, Oak Ridge National Laboratory.
12. W. E. Browning, C. E. Miller, R. P. Shields, and B.F. Roberts, "Simulated Loss-of-Coolant Accident in the ORR," pp. 109-118 in Nuclear Safety Semiannual Progress Report for Period Ending December 31, 1964, USAEC Report ORNL-3776.

13. M. J. Bell, Chemical Technology Division Progress Report for Period Ending May 31, 1969, USAEC Report ORNL-4422, Oak Ridge National Laboratory.

ORNL-4602
UC-80 — Reactor Technology

INTERNAL DISTRIBUTION

1-3. Central Research Library
4. ORNL - Y-12 Technical Library Document Reference Section
5. General Engineering Library
6-322. Laboratory Records (Nuclear Safety Report Distribution)
323-351. Laboratory Records Department
352. Laboratory Records, ORNL R.C.
353. R D. Ackley
354. M. Bender
355. C. E. Bettis
356. J. P. Blakely
357. W. E. Browning, Jr.
358. J. R. Buchanan
359. C. A. Burchsted
360. Zell Combs
361. W. B. Cottrell
362. G. E. Creek
363. F. L. Culler
364. R. J. Davis
365. M. H. Fontana
366. J. K. Franzreb
367. S. H. Freid
368. W. R. Grimes
369. R. F. Hibbs
370. Ernst Hoinkis
371. G. W. Keilholtz
372. R. A. Lorenz
373. G. H. Llewellyn
374. H. G. MacPherson
375. A. P. Malinauskas
376. M. F. Osborne
377. G. W. Parker
378. L. F. Parsly
379. T. W. Pickel
380. T. H. Row
381. J. P. Sanders
382-418. R. P. Shields
419-423. M. Siman-Tov
424. M. J. Skinner
425. D. A. Sundberg
426. D. B. Trauger
427. J. Truitt
428. W. D. Turner
429. G. M. Watson
430. J. L. Wantland
431. A. M. Weinberg
432. Paul Cohen (consultant)
433. John Corbett (consultant)
434. H. H. Kellogg (consultant)
435. L. N. Zumwalt (consultant)

EXTERNAL DISTRIBUTION

436. P. H. Emmett, Johns Hopkins University, Baltimore, Maryland
437. M. C. Leverett, General Electric Co., San Jose, California
438. W. J. McCarthy, Detroit Edison, Detroit, Michigan
439. J. C. Geyer, Johns Hopkins University, Baltimore, Maryland
440. R. E. Adams, Air-Tec, Inc., P.O. Box 464, Oak Ridge, Tennessee
441. J. A. Swartout, Union Carbide Corporation, New York, N.Y. 10017
442. Laboratory and University Division, AEC, ORO
443. Patent Office, AEC, ORO
444-667. Given distribution as shown in TID-4500 under Reactor Technology category (25 copies — NTIS)