LOCKHEED MARTIN ENERGY RESEARCH LIBRARIES
3 4456 0514471 4

CENTRAL RESEARCH LIBRARY
DOCUMENT COLLECTION

OAK RIDGE NATIONAL LABORATORY
operated by
UNION CARBIDE CORPORATION • NUCLEAR DIVISION
for the
U.S. ATOMIC ENERGY COMMISSION

ORNL-TM-3394

cy. 60

ISOTOPE KILOWATT PROGRAM QUARTERLY PROGRESS REPORT FOR PERIOD ENDING MARCH 31, 1971

A. P. Fraas, Program Director

OAK RIDGE NATIONAL LABORATORY
CENTRAL RESEARCH LIBRARY
DOCUMENT COLLECTION
LIBRARY LOAN COPY
DO NOT TRANSFER TO ANOTHER PERSON
If you wish someone else to see this document, send in name with document and the library will arrange a loan.

NOTICE This document contains information of a preliminary nature and was prepared primarily for internal use at the Oak Ridge National Laboratory. It is subject to revision or correction and therefore does not represent a final report.

This report was prepared as an account of work sponsored by the United States Government. Neither the United States nor the United States Atomic Energy Commission, nor any of their employees, nor any of their contractors, subcontractors, or their employees, makes any warranty, express or implied, or assumes any legal liability or responsibility for the accuracy, completeness or usefulness of any information, apparatus, product or process disclosed, or represents that its use would not infringe privately owned rights.

ORNL-TM-3394

Contract No. W-7405-eng-26

REACTOR DIVISION

ISOTOPE KILOWATT PROGRAM QUARTERLY PROGRESS REPORT FOR PERIOD ENDING MARCH 31, 1971

A. P. Fraas, Program Director

MAY 1971

OAK RIDGE NATIONAL LABORATORY
Oak Ridge, Tennessee
Operated by
UNION CARBIDE CORPORATION
for the
U.S. ATOMIC ENERGY COMMISSION

LOCKHEED MARTIN ENERGY RESEARCH LIBRARIES

3 4456 0514471 4

FOREWORD

In 1968 the Oak Ridge National Laboratory started work on a program to evaluate various types of radioisotope energy conversion systems for the production of 1 to 10 kw of electric power for terrestrial and undersea applications. This program is being carried out for the U.S. Atomic Energy Commission Division of Reactor Development and Technology and the Naval Facilities Engineering Command. The first phase of the program was a parametric and engineering analysis comparing the principal isotope fuels and the principal types of energy conversion system that have been proposed for applications of this sort, and the preparation of a set of conceptual designs for the more attractive systems. That work was completed in the summer of 1969 and was reported in Ref. 1. In October of 1969 ORNL was asked to proceed with a detailed engineering study of the three most promising systems selected from those covered in Phase I of the program. These three systems now under study are a 2-kw(e) thermoelectric system, a 3-kw(e) steam Rankine cycle system, and a 5-kw(e) organic Rankine cycle system.

The first step in the effort was to evolve a program plan for a three-year effort to be carried out in calendar years 1970, 1971, and 1972. The conceptual designs presented in Task I were reexamined and possible improvements were considered with particular attention to the difficult development problems. A variety of engineering tests was considered as a means of evaluating the technology, solving the principal technical problems, and investigating engineering uncertainties that should be resolved before settling on the design of a prototype power plant. In view of the limited funds and the desirability of narrowing the field to a single Rankine cycle system, particular attention was given to the relative merits of the steam and organic Rankine cycle systems.

The first quarter of 1970 was devoted to firming up reference designs for the three types of system, selecting the most crucial experiments required to evaluate the technology, and settling on a program plan for the three-year effort.[2] With this first quarter's work as a foundation, the second quarter was then devoted to firming up the details of the reference designs, firming up details of the experiments to be conducted, and preparation of topical reports covering the three reference designs with their

associated experiments.[3] The third and fourth quarters have been devoted to the design and construction of the most urgent experiments.[4,5] Subsequent quarters will be devoted to the design and construction of additional test equipment and to tests designed to investigate vital questions in the technology. As the results of these tests become available, the reference designs will be revised accordingly. The objective is to evolve by December 1972 a set of designs for two prototype power plants with a clear delineation of the development program required in each case including firm estimates of the cost and time for the various programmatic steps.

This is the fifth in a series of quarterly progress reports. Topical reports present the work carried out in particular areas when key tasks are completed. When a topical report is issued essentially concurrently with a quarterly report, to avoid duplication only a very brief summary of its contents is included in the quarterly.

CONTENTS

Page

1.0 SUMMARY 1
2.0 ORGANIC SYSTEM 2
Capsule Tests 2
One-Quarter Scale Organic Fluid Decomposition Test Loop ... 2
Design Analysis 2
Glass Loop 3
Detail Design 4
Fabrication 5
3.0 THERMOELECTRIC SYSTEM 5
Heat Pipe Tests 5
Thermoelectric Module 7
Estimated Performance 7
Module Test 12
4.0 THERMAL FUSE AND INSULATION 16
5.0 HEAT BLOCK-SHIELD DESIGN 16
6.0 FUEL FABRICATION 20
REFERENCES 24

ISOTOPE KILOWATT PROGRAM QUARTERLY REPORT
FOR PERIOD ENDING MARCH 31, 1971

1. SUMMARY

The organic capsule test continued during the quarter without an interruption and had accumulated 2180 hr as of the end of March.

The detail design of the 1/4-scale organic fluid evaluation loop was completed. The heat block forging has been procured and the specifications for the pumps are out for bids and the order is expected to be placed in April.

A glass loop has been built to mock up the 1/4-scale organic fluid test loop. Operation of this loop indicates that good startup, fluid flow stability, and control characteristics prevail.

Both startup and operating tests at 1000 to 1500°F were made on the heat pipe. No performance data were obtained because of the failure of a differential thermopile. A new thermopile has been fabricated and calibrated.

The heat pipe for the thermoelectric module was completed and delivered to the 3M Company on February 10. Fabrication of the thermoelectric module at 3M was completed in March and testing was initiated. The test was stopped 9 hr after startup because of the failure of two nickel wire leads to the heaters. Subsequent examination of the loop and chemical analysis of sections of the wire showed that the lead broke because of embrittlement by sulfur and possibly cadmium contamination. The test was shut down pending analysis of scrapings and fillings taken from various parts of the system to determine the extent to which other parts might have been adversely affected.

The assembly of the test section for the next series of tests on the aluminum wire screen insulation was completed. Aluminum alloy 1100 has been selected for the fusible insulation for the organic and low-temperature (PbTe) thermoelectric units and an order placed for the material. Tests were started to determine the effective thermal conductivity of the aluminum screen insulation as a function of pressure.

The design of the full-scale heat block-shield has been completed and the drawings have been sent out for bids.

A detailed cost breakdown and schedule for a 34 kw(th) $SrTiO_3$ heat source was prepared. The cost, not including the $SrTiO_3$, is about $800,000. This cost was based on a 2 1/2 yr program, i.e., the shortest program that would give near-minimum costs.

2.0 ORGANIC SYSTEM

Capsule Tests

The capsule endurance tests to determine the effects of radiation at 600°F on the rate of decomposition of Dowtherm A have continued throughout the quarter with no incident except a power outage in January that affected the entire building. As a consequence of this power outage the temperature of the heat block dropped 15°F below the normal test temperature of 600°F at which point the power was restored to the building. Thus there was no loss in effective endurance test time. The total endurance test time at the end of March was 2180 hr. The automatic control equipment is holding the temperature within ± 1°F.

One-Quarter Scale Organic Fluid Decomposition Test Loop

To supplement the results from the static capsule tests reported above, a one-quarter scale version of the organic Rankine cycle system is to be operated with heat fluxes, flow rates, temperature distribution, surface volume ratio, and other pertinent conditions as nearly similar to the full-scale 5 kw(e) system as possible.

Design Analysis

The detail design analysis of the system was completed and the basic layout validated insofar as it seemed reasonable to do this by analytical efforts. The only major problem encountered was associated with bowing of the boiler tubes in the heat block as a consequence of a fundamental thermal instability problem. This is induced by the variation in temperature drop across the variable air gap between the boiler tube and the heat

block. As a consequence of this fundamental instability, the boiler tubes will tend to bend so that their axes will form sine waves with each boiler tube touching the heat block at intervals of perhaps 8 in., first on one side and then on the other. This will lead to irregularities in the axial and circumferential temperature distribution along the length of the boiler tube. The magnitude of these irregularities in temperature will depend on the clearance between the tube and the heat block as well as on details of the installation geometry. The best approach appears to be to maintain close control on the clearances between the tube and the heat block. After investigating the effects of tight clearances on the cost of the equipment it was decided to hold this clearance to 0.005 to 0.014 in. This will be accomplished by tack welding six 0.005 in. OD wires to the tube OD so that they run longitudinally at 60 deg intervals along the length of the heated section.

Glass Loop

Efforts to analyze the boiling flow stability characteristics of the proposed system and also the performance of the vapor separator indicated that the system design as laid out on paper is sound. However, there are so many factors involved that it seemed desirable to investigate the boiling flow stability problems in a glass loop that would give good simulation of the two-phase flow characteristics of the hot Dowtherm loop. It may be noted that it was found eminently worthwhile under the MPRE Program to build glass loops and operate them with either water or Freon to mock up the boiling potassium systems of the boiling potassium space reactor program. As a matter of fact, this was done on every system except the first, and no difficulties with boiling flow stability were experienced except in the first system. Incidentally, in that system the difficulties were resolved only after a glass loop was finally built so that the instability difficulties could be understood properly.

The glass loop was completed and shakedown testing initiated January 28. Results were very encouraging; the vapor separator functioned very satisfactorily, and there was excellent decoupling of the flow into the vapor separator from the boiler tubes. There were no signs of coupling

between tubes when there were surges in liquid flow in one tube or another under startup and low power operating conditions. The liquid flow through the condenser followed the pattern envisioned in the design, and thus should give no difficulty with subcooling.

The glass model of the 1/4-scale organic boiler was operated for about 10 days and then had a forced shutdown caused by the failure of one of the glass boiler tubes. The tube broke in the curved vapor riser section while operating at a system pressure of 18 psig. Under startup and low power operating conditions the boiler showed very stable performance with no feedback of flow pulsations between boiler tubes and no tendency for liquid flow reversal in the vapor riser. Vapor quality calculations from low power data indicate that the boiler-vapor separator system should achieve about the desired vapor quality at full power. Since better simulation of the Dowtherm flow characteristics can be achieved by operating the Freon 113 at a pressure of about 25 psig, it was decided to replace the glass tubes with metal tubes to insure more reliable operation for the remainder of the tests. A short glass section was retained at the top.

The metal boiler tubes were installed and operation was resumed. Boiling heat transfer tests to determine the exit quality from the boiler tubes were in progress at the end of the quarter. Boiler heat input and subcooling of the condensate will be varied to provide information on the boiler performance over a wide range of conditions. The flow stability of the boiler tubes will be tested by applying different heat input rates to the three boiler tubes and observing if there is any effect on the performance of one tube by another.

Detail Design

The detail design drawings for the 1/4-scale test loop have been completed. The drawings along with a rough draft of the design report and a Quality Assurance Program Plan have been submitted to the ORNL Quality Assurance group for their review and approval.

Fabrication

The heat block for the test has been received and the support structure for the block has been fabricated. The stainless steel pipe for the boiler tubes has been received and inspected. The OD of the tubes was found to be 1.050 ± 0.001 in. With the OD fixed, the tube holes in the heat block were specified to have an ID of 1.067 ± 0.001 in. and the drills were ordered. This will provide a uniform, accurately determined diametral clearance so that the test data for the temperature drop across this gap will be as meaningful as possible.

Figure 1 shows one of the four $SrTiO_3$ capsules for the loop test. The four capsules will be stacked in a 1/4-in. diam hole in the center of the heat block and will contain a total of 90 to 100 curies of $SrTiO_3$. This will give a dose rate at the boiler tubes of 10 to 15 rad/hr.

Procurement of the pumps has been initiated and fabrication of the heat block is underway in a local shop.

3.0 THERMOELECTRIC SYSTEM

Heat Pipe Tests

Difficulty was experienced in the heat pipe test early in January as a consequence of absorbed moisture in the thermal insulation. This moisture was driven out of the thermal insulation at the hot end and condensed in sufficient quantities around the heater wires at the cold end of the calorimeter so that shorting of the electric power leads occurred. The problem was corrected by opening the rig up, drying it out thoroughly by heating under a vacuum, and reassembling after the new leads were repaired. The design of the calorimeter to be used by 3M for testing the full-scale thermoelectric module was revised accordingly.

The heat pipe has operated successfully at temperatures ranging from 1000 to 1500°F. No performance data were obtained during these runs because of the failure of a differential thermopile early in the test. A new thermopile was fabricated, calibrated, and installed.

A series of startup tests were made to get the "feel" of the system prior to starting the heat pipe thermoelectric module at 3M Company in

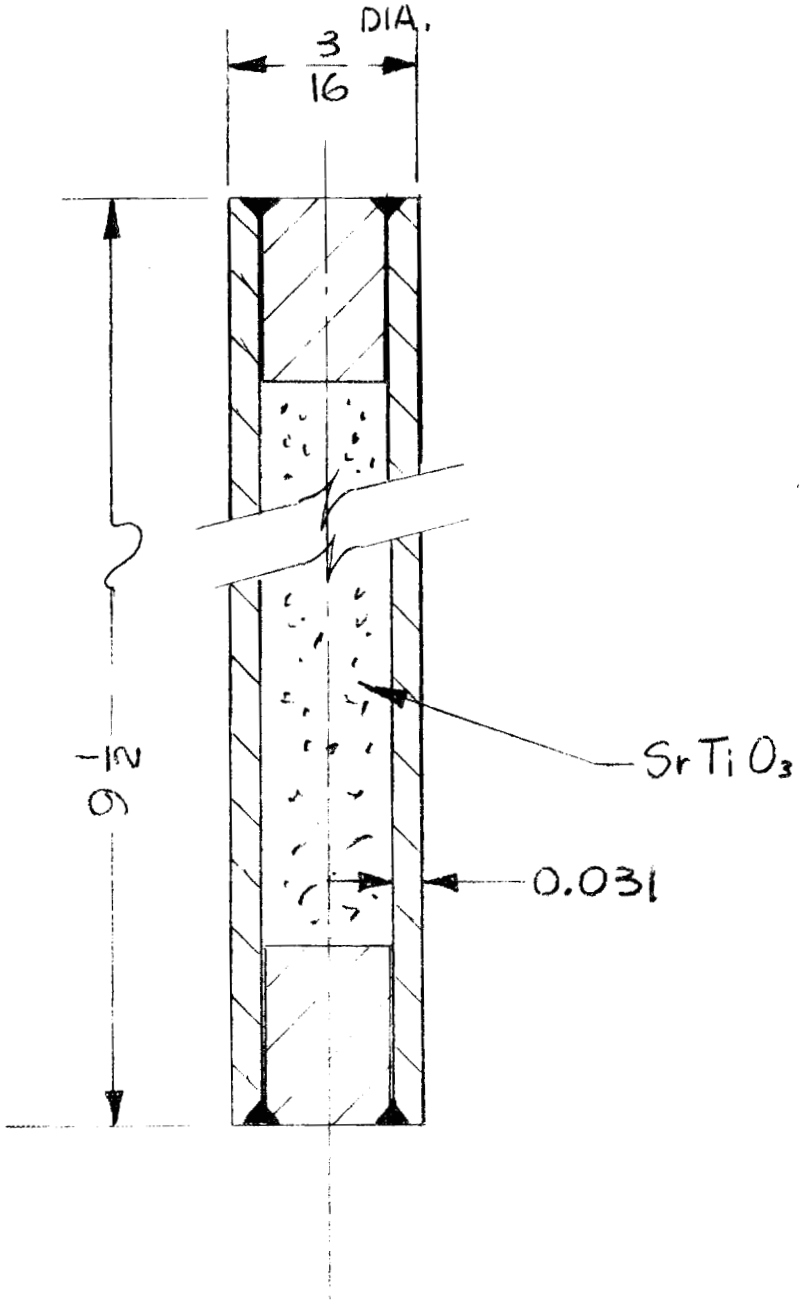

Fig. 1. $SrTiO_3$ Source for 1/4-Scale Test Loop.

March. No quantitative data on heat transfer performance were obtained but the following qualitative observations on startup rate were made:

1. The calorimeter heat sink is too closely coupled to the heat pipe to allow the heat pipe to be started unless the calorimeter is heated above the melting point of potassium (146°F).

2. Once the calorimeter is so heated, it is possible to apply full power (~4.5 kw) to the heaters to effect a startup without overheating the evaporator section of the heat pipe.

Thermoelectric Module

Fabrication of the heat pipe-nickel sleeve assembly was completed and the heat pipe was loaded with 75 g of potassium. The loading procedures were essentially the same as those followed in loading the first heat pipe. After the "wetting-in" period the heat pipe-nickel sleeve assembly was placed in a vacuum furnace and heated to 500°C for 24 hr. During this time, hydrogen that may have diffused into the heat pipe during the loading and "wetting-in" operations, would tend to diffuse back out of the heat pipe.

The heat pipe-nickel sleeve assembly was delivered to 3M Company on February 10, 1971 for assembly of the thermoelectric junctions to form the complete module. At that time ORNL and 3M Company representatives made final arrangements for the assembly and startup of the test module using the calorimeter, shield can, electric heaters, and other test equipment supplied by ORNL.

Estimated Performance

In planning the details of the test program, information was obtained from 3M on the heat capacity and heat load for the thermoelectric module as a function of hot and cold junction temperatures. The effective heat capacity of the thermoelectric module is about 1.3 Btu/°F related to the hot junction temperature. This value takes account of the anticipated temperature gradient through the thermoelectric module. Table 1 lists the predicted heat loads as a function of the hot junction temperature for cold junction temperatures of 150 to 300°F. These numbers are based on

Table 1. Predicted Heat Requirements for the Thermoelectric Module as a Function of Hot Junction Temperature

Hot Junction Temperature (°F)	Heat Requirements (Watts)	
	Cold Junction Temperature (150°F)	Cold Junction Temperature (300°F)
300	460	
400	760	
500	1063	591
600	1370	891
700	1681	1194
800	1993	1502
900	2305	1814
1000	2620	2133
1100	2947	2471
1200	3302	2843
1300	3716	3277

the assumption that the thermoelectric module would be electrically loaded during the heat-up. If no electrical load is applied, 3M estimates that the heat requirements would be 20% less.

The relation between voltage and current as estimated by 3M is shown in Fig. 2 for the beginning-of-life condition along with curves for the net power output and the hot junction temperature. An additional I-V curve is also shown for a constant hot junction temperature of 1000°F. Note that the hot junction temperature varies about 300°F in changing the electrical load from zero to the short-circuited condition with a constant heat input. This indicates that it will be necessary to maintain an electrical load on the module during endurance tests to avoid excessive hot junction temperatures, i.e., temperatures above 1050°F.

Figure 3 shows a similar set of curves for the end-of-life condition, and Fig. 4 shows the effects of operating time on the output of the module for a constant value of 24 volts at the terminals.

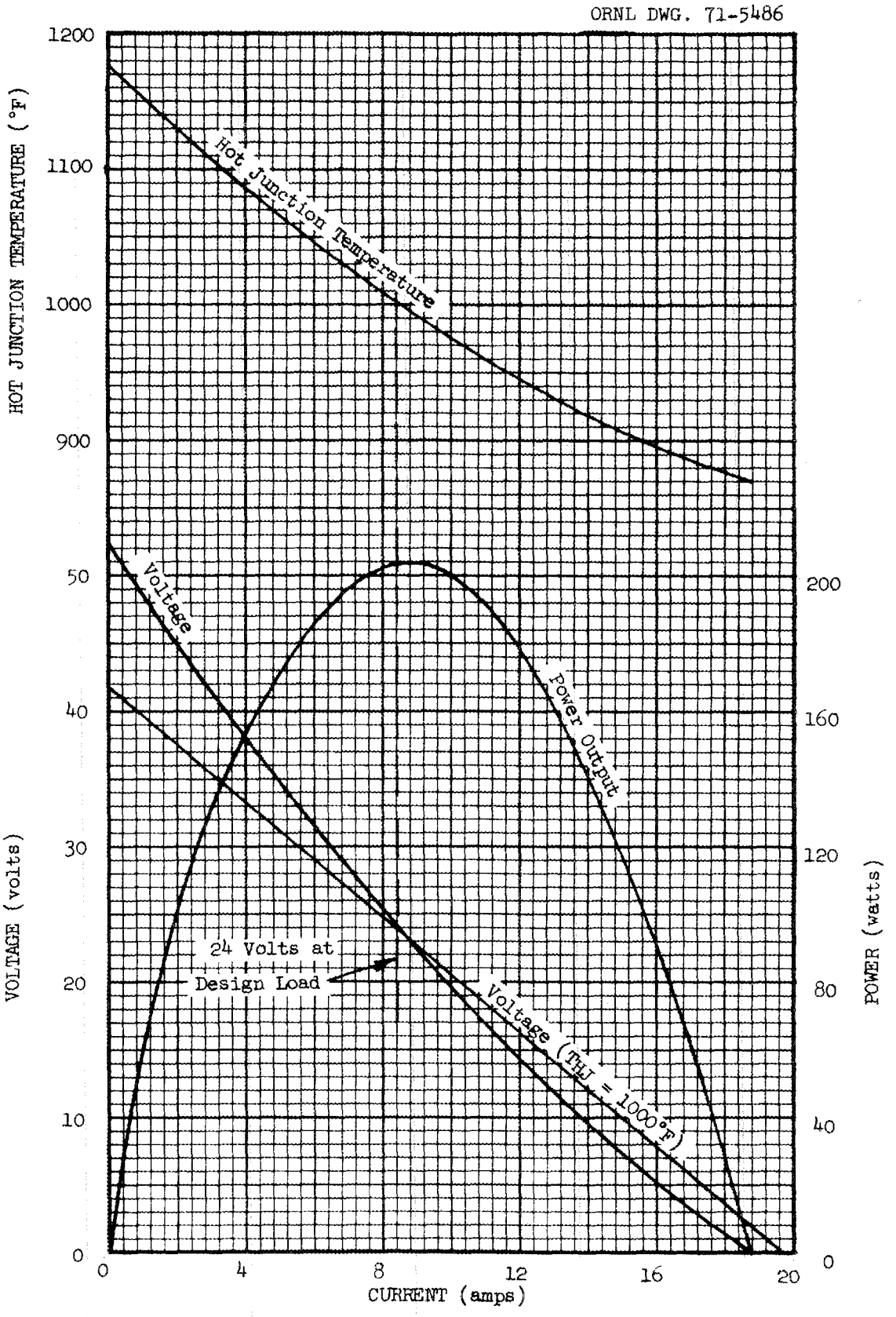

Fig. 2. Predicted Characteristics of the Thermoelectric Module at the Beginning of Life as Estimated by 3M. (Heat input = 2350 watts and cold junction temperature = 150°F)

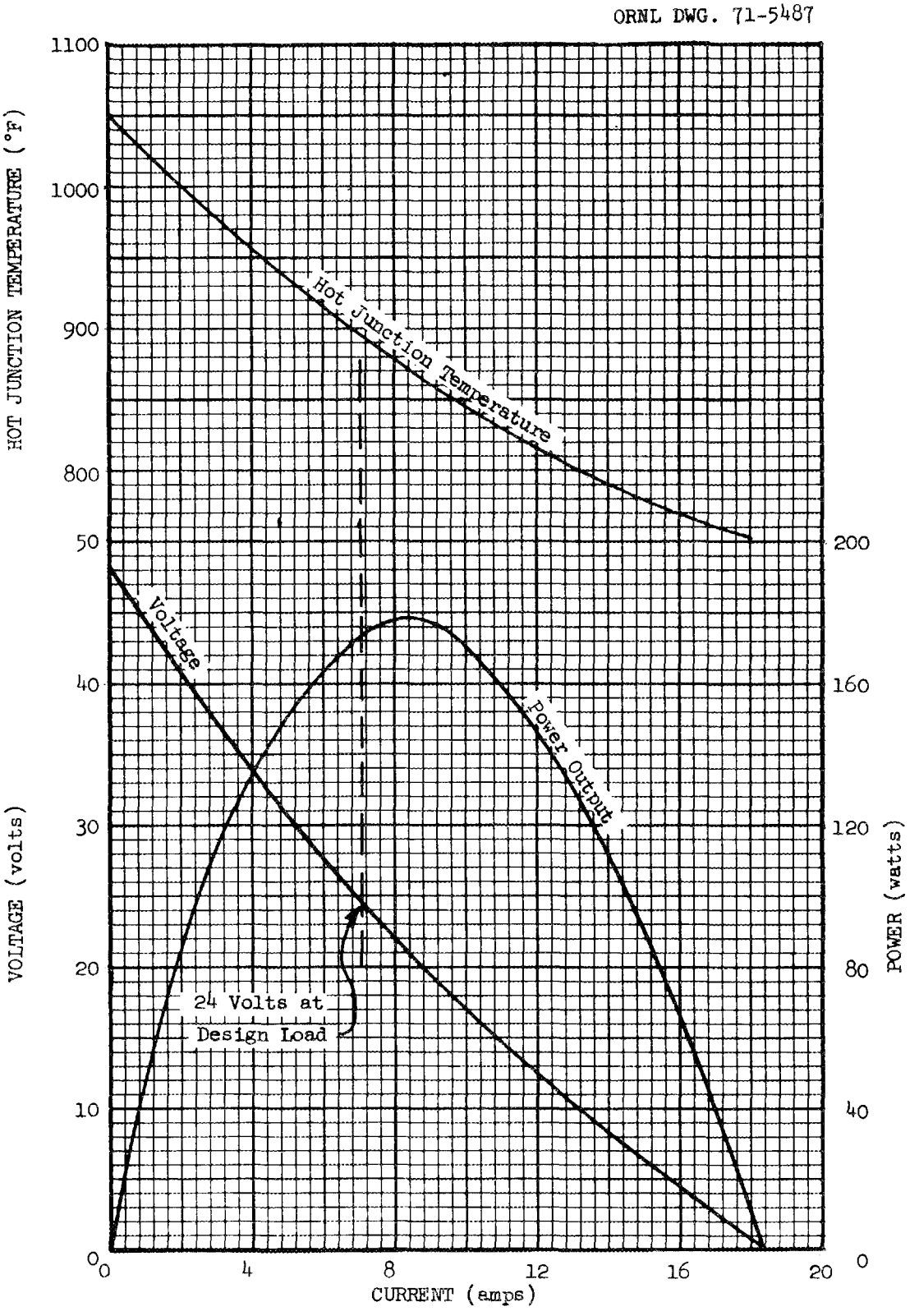

Fig. 3. Predicted Characteristics of the Thermoelectric Module After 5 years of Operation Allowing for Both Degradation of the Thermoelectric Junctions and Decay of the Isotope as Estimated by 3M. (Heat input = 2076 watts and cold junction temperature = 150°F)

ORNL-DWG. 71-5488

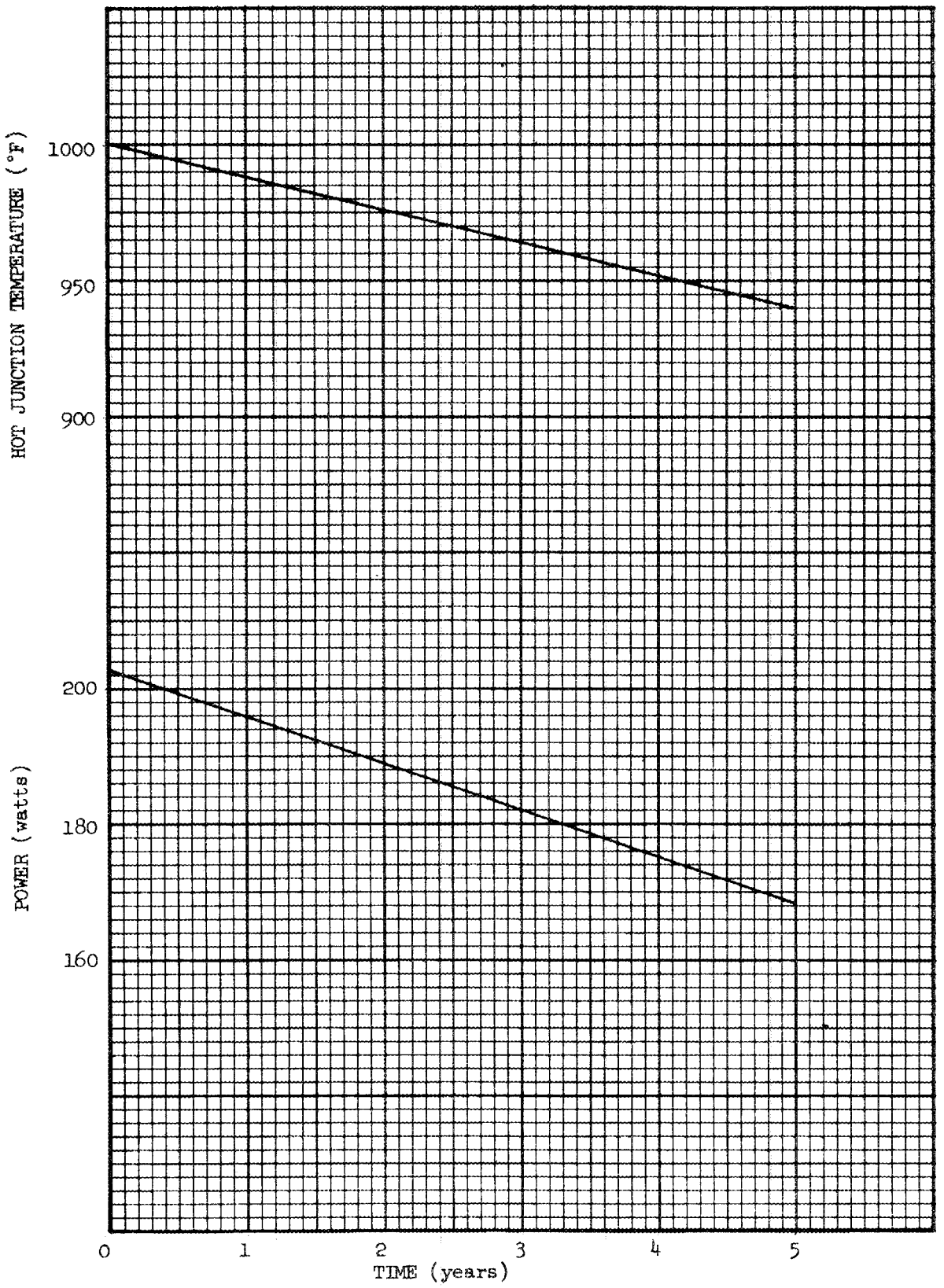

Fig. 4. Effects of Operating Time on the Output of the Thermoelectric Module at 24 Volts as Estimated by 3M.

Module Test

On March 3, 1971, D. B. Lloyd of ORNL visited the 3M Company to assist in starting up the heat pipe-thermoelectric generator assembly. At 6:00 a.m., March 5 the system test was started. The test setup is shown schematically in Fig. 5. Before starting the heat pipe, the temperature of the entire system was raised above the melting point of potassium (146°F) to reduce the load on the heat pipe during startup. Power (~2 kw) was applied to the internal heaters and the heat pipe was started without difficulty. The 3M Company had earlier indicated that the temperature of the hot junction should be raised to 1200°F within an hour after starting the system. This proved to be impossible because the power supply was inadequate.

While the temperature of the system was still climbing about three hours after the startup, there was a step decrease in the maximum input power level from 2.7 to 2.2 kw. It was surmised (and later determined) that a lead to one of the internal heaters had failed. From this point on, temperatures in the system began to drop slowly until the temperature at the condenser end of the heat pipe was about 1100°F.

At this point it appeared that a second heater (of three) had failed and the decision was made to shut down the system, allow it to cool, and then check the heaters and wiring to determine the cause of the trouble.

When the shield can was removed it was discovered that the nickel lead wires to the internal heaters had become severely embrittled and two had broken. (The broken lead accounted for the sudden decrease in input power.) A yellow deposit had also formed on the surface of the microquartz insulation next to the shield can.

At this time the 3M Company informed ORNL that rather than holding the two halves of the clamshell heaters together with nickel or nichrome wire (as requested) they had substituted hose clamps. Unfortunately, in this case the adjusting screw and screw housing on these clamps was cadmium plated. The high temperature encountered during the startup caused the cadmium plating to evaporate from the hose clamp screws and condense on cooler portions of the equipment.

ORNL DWG. 71-5489

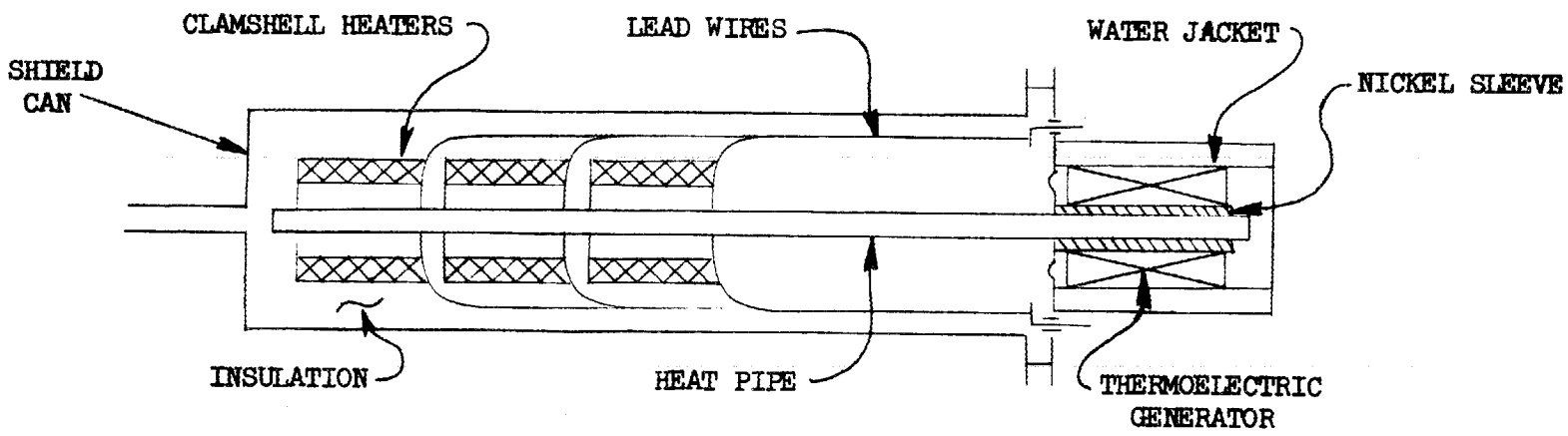

Fig. 5. Heat Pipe-Thermoelectric Generator Test Configuration.

At our request 3M forwarded to ORNL samples of (1) the embrittled nickel lead wire, (2) unused nickel wire from the same lot, and (3) the microquartz insulation with the yellow deposit.

When 3M personnel disassembled the equipment they did not keep track of where each of the pieces of wire and insulation or the hose clamps came from, in fact, they discarded all but a few inches of the nickel wire and a small amount of the insulation.

Preliminary results of the analysis of the samples at ORNL indicated the following:

A. Insulation — the yellow deposit contained both sulphur and cadmium in roughly equal concentrations. (Cadmium sulfide is a yellow substance commonly used as a pigment.) There was no evidence of cadmium anywhere in the insulation except in the yellow deposits. Sulphur was found throughout the insulation.

B. Nickel wire — the unused wire showed no evidence of cadmium and had about 200 ppm sulphur. The embrittled wire had 1000 ppm sulphur and also had a surface contamination of cadmium.

After these results were obtained ORNL requested 3M to send a sample of unused microquartz and, if possible, obtain scraping or filings from the heat pipe-nickel sleeve assembly that would permit a better appraisal of the severity of the sulphur contamination.

The primary concern was the integrity of the weld lip on the nickel sleeve (Fig. 6). If this were embrittled and should fail, the protective atmosphere presently inside the thermoelectric generator would be lost. The 3M Company stated that, in the event of a containment failure, the system could be operated satisfactorily if a blanket of pure argon were maintained around the thermoelectric elements. The 10,000 hr test objective for the generator requires that extremely low levels of oxygen and water vapor be maintained in the argon, just how low is not yet clear. To make it possible to maintain the gas blanket a valve will be installed in a pinched off gas fill tube that protrudes from the top of the generator.

In view of the potentially serious consequences, 3M was requested to delay reassembly pending a detailed chemical and metallurgical analysis.

ORNL DWG. 71-5147

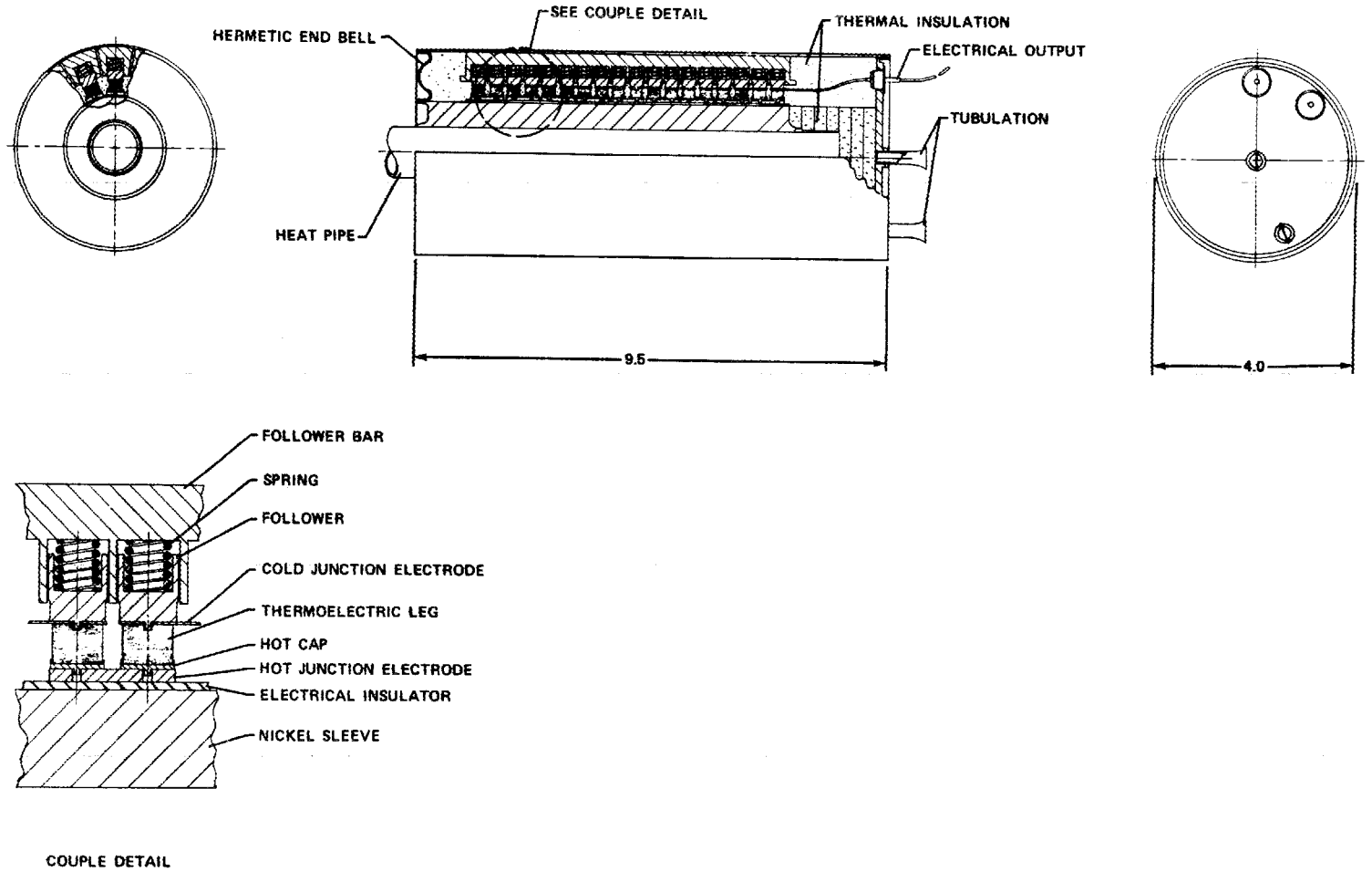

Fig. 6. Thermoelectric – Heat Pipe Test Module Built by the 3M Company

4.0 THERMAL FUSE AND INSULATION

The assembly of the test section for the next series of tests on the original aluminum alloy (alloy 5056) wire screen was completed. The heater rod and the aluminum wire screen specimen, along with the thermocouples, were mounted on the top head of the vacuum tank. The entire assembly was placed in the vacuum tank for testing, after final checkout, early in March. Thermal conductivity measurements are in progress. Tests are being performed at pressures from 0.02 mm Hg abs to atmospheric pressure. Measurements at 0.1 psia have been completed and preliminary analysis of the data indicates that the thermal conductivity at this pressure is about 75% of the thermal conductivity at atmospheric pressure. Testing and analysis of the data should be completed during April.

The new aluminum alloy for the wire screen has been selected and an order has been placed for the screen material for subsequent tests. The alloy selected is designated alloy 1100 in the Alcoa Aluminum Handbook and has a chemical composition within the following limits:

Material	Percent
Silicon plus iron (max)	1.0
Copper (max)	0.20
Manganese (max)	0.05
Zinc (max)	0.10
Other elements	
Each	0.05
Total	0.15
Aluminum (min)	99.00

Alloy 1100 has a melting range of 1190 to 1215°F. The screen will be woven of wire of 0.011 in. diam on a mesh of 16 × 16 wires per inch. Delivery of the new material was scheduled for about April 15.

5.0 HEAT BLOCK-SHIELD DESIGN

The design of the full-scale heat block-shield has been completed and has been sent out for bids. The basic layout is shown in Fig. 7. The major design details are given in Table 2. The design of an electric heater that will be used to simulate the isotope heat sources is underway. The heater will be designed to operate for short periods at a cladding

Table 2. Design and Dimensional Data for the Full-Scale Heat Block-Shield Test

Material	1010 steel
Diameter	
Fin root, in.	35.5
Fin tip, in.	40.5
Height, in.	60
Number of fins	45
Fin height, in.	2.5
Fin thickness, in.	0.5
Holes for organic boiler tubes	
Number	12
Diameter, in.	1.067
Length, in.	55
Bolt circle, in.	31
Holes for thermoelectric heat pipes	
Number	12
Diameter, in.	1.008
Length, in.	55
Bolt circle, in.	21.25
Holes for electric heater	
Number	7
Diameter, in.	4.153
Length, in.	50.25
Centerline spacing, in.	5.68
Heat block-shield assembly shipping weight without heater, lb	15,800

temperature of 2000°F. The clad will be fabricated from 310 stainless steel and the heater element from Nichrome V. The electric heater is being designed to give the same hot dimension as the isotope heat source.

The purpose of the heat block-shield test is to determine the temperature structure of the heat block-shield unit for three major classes of operation. These classes include shipping, normal operation, and a loss-of-coolant accident.

A full-scale steel heat block-shield with electric heaters to simulate the fuel capsules will be used to allow the determination of the temperature structure under various methods of operation. A total of seven heaters will be used. The heaters will be clad with 310 stainless steel to allow operation at 2000°F in air. The heater clad will be 4.090 in.

OD by 40.3 in. long. The heaters will be located in the center of the block in seven 4.153-in. OD holes in a hexagonal array with a web thickness of 1.5 in. The heaters will be sized to deliver 5.67 kw each, which will allow the simulation of both $SrTiO_3$ fuel that requires seven elements to deliver the design power of 34 kw and SrF_2 fuel which requires only six elements to deliver the design power.

The block will have twelve 1.067-in. ID × 55-in. deep boiler tube holes located on a circle having a diameter of 31 in. and twelve 1.008-in. ID × 55-in. deep thermoelectric heat pipe holes located on a diameter of 21.25 in. The heat block-shield will be 35.5 in. OD by 59.75 in. long with 45 fins. The fins will be 0.5 in. thick by 2.5 in. high. The block will be supported by a stainless skirt 0.25 in. thick by 11 in. long attached to a 48-in. × 1.5-in. iron plate that simulates the bottom eliptical head (see Fig. 7). The low thermal conductivity of the stainless steel will reduce the heat loss, and its good strength at 1100°F avoids difficulty with creep. Figure 7 shows the location of the fusible insulation relative to the heat block-shield.

The temperature distribution will be obtained from thermocouples attached to the heater element cladding and from thermocouple probes that will be inserted in holes located radially at the top, bottom, and midplane of the heater elements. Additional holes for thermocouple probes will be located axially between the center heater element and the six outer elements. The holes for the boiler tubes will also be used for temperature probes.

The test to determine the temperature structure during shipping will consist of two main parts. One concerns the temperature during normal shipping, i.e., in an upright position with the shield bare losing heat to the ambient air by radiation and convection. The second part of the shipping test will consider a case in which an accident has caused the block to be turned on its side and resting on sandy soil. For each of these tests the block temperature structure will be determined.

The temperature structure will be obtained for normal operating conditions with the heat block-shield outside diameter maintained at a temperature of approximately 800°F. The temperature will be maintained by the use of a 48-in. diam radiation shield extending the full length of the block.

ORNL DWG. 71-5490

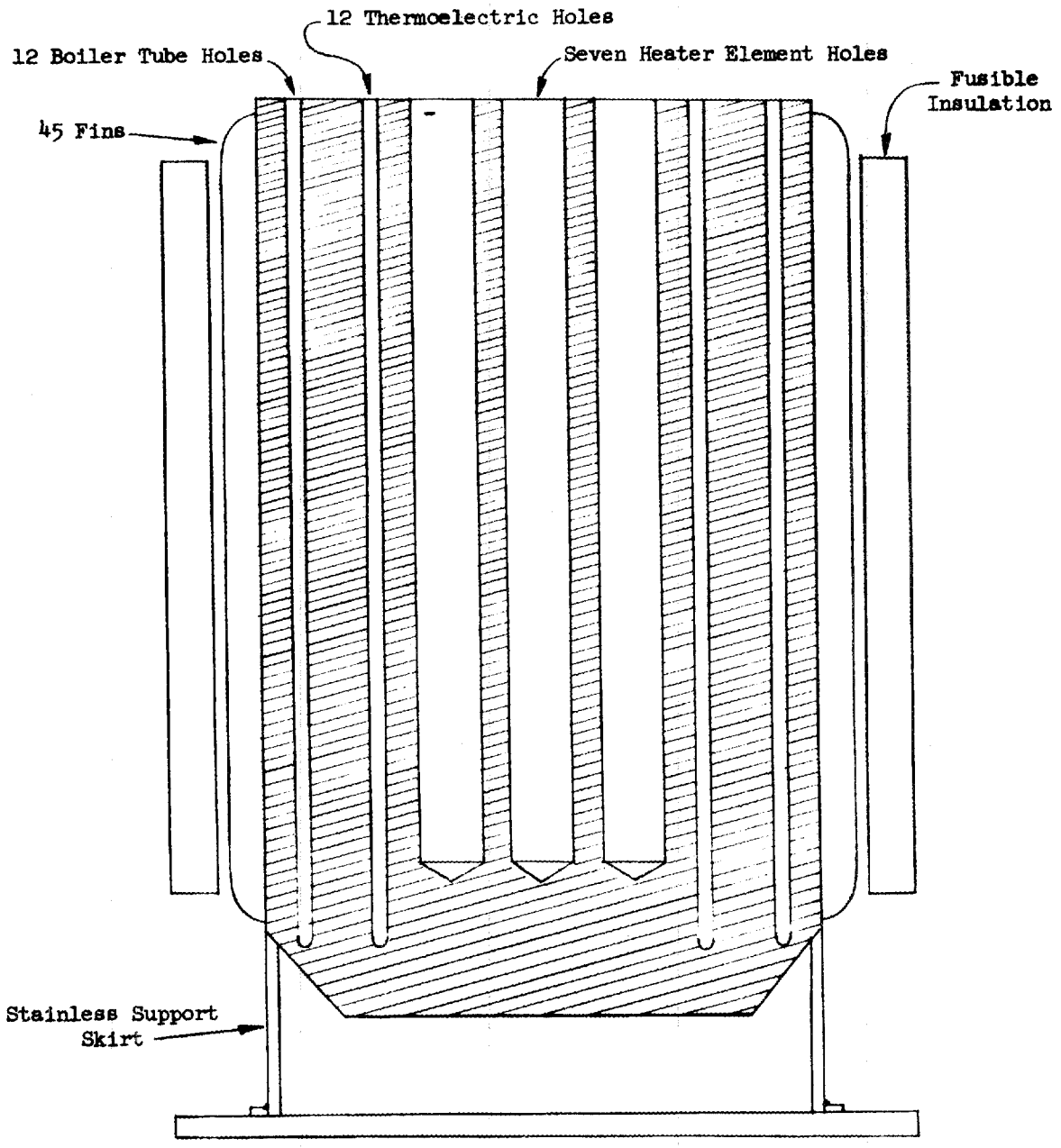

Fig. 7. Heat Block-Shield Test.

The temperature structure for the loss-of-coolant accident case will be obtained with the fusible insulation installed. The block ends will be insulated to simulate the conditions that would exist in a pressure vessel. The temperature structure in the block will be obtained as well as the heater element clad temperature corresponding to the maximum temperatures reached during the meltdown of the fusible insulation.

The total heat loss from the unit with the fusible insulation in place is estimated to be 3.3 kw when the block surface temperature is 800°F. The total weight of the unit is approximately 17,500 lb, and its heat capacity is 2100 Btu/°F. At normal operating conditions the rate of decrease in the average metal temperature without heat being supplied is 5.3°F/hr. The controls for the power input will be a simple on-off system with backup temperature protection in case the unit exceeds our pre-set value. Instrumentation and controls will also be provided to prevent damage or overheating that might be caused by a short in the heaters or between the heaters and the heater cans. Temperatures will be recorded on strip chart recording potentiometers and selected temperatures will be recorded by the Dextir data collection system.

6.0 FUEL FABRICATION

A cost estimate has been made for the fabrication and encapsulation of a 34 kw(th) (beginning-of-life) $^{90}SrTiO_3$ source for the isotopes kilowatt program. The estimate was based on costs as of January 1, 1971 on a full-cost recovery basis, and includes the cost of fabrication of the $^{90}SrTiO_3$ pellets, preparation for and interim storage, transfer and handling, capsule material procurement and fabrication, loading, welding, and inspection of the completed capsules. The development program includes writing material procurement specifications, development of capsule component and fabricated capsule inspection procedures, and welding procedures for the capsule. The estimate does not include the cost of the ^{90}Sr or its processing, nor does it include any escalation for increases in the "cost of living." (An example of escalated costs is given, however.) This estimate also does not include quality assurance beyond the normal or "routine" quality assurance program normally performed on

radioisotope power sources (e.g., SNAP 21 and SNAP 23 programs). Any additional quality control programs would, of course, increase the cost estimates.

The program as proposed is a 2 1/2 year program and is based on its being performed in the Fission Products Development Laboratory (FPDL) and the Source Development Laboratory (SDL) at ORNL. A 2 1/2 year program is required to allow for stabilized long-term scheduling of operations at the FPDL with minimum interference with other commitments and anticipated requirements of the facility, yet provides a base-line of work to maintain operations in a continuous fashion. Continuous operation results in an overall cost savings to the customer.

Costs and manpower requirements are broken down into two groups: development and the actual fabrication costs. The development costs would be nonrecurring costs associated with the building of the first unit. Table 3 is a cost breakdown by fiscal year. Table 4 is a manpower breakdown by fiscal year. Fiscal year 3 in the tables is the one-half year of the 2 1/2 year program.

Table 3. Cost Breakdown by Fiscal Year to Produce a 34 kw(th) $^{90}SrTiO_3$ Source in the ORNL Fission Products Development Laboratory

	FY 1	FY 2	FY 3	Total
Fabrication Costs				
Operating labor and material				
Source fabrication	$165,000[a]	$109,000	$ 99,000	$373,000
Capsule fabrication	29,000[b]	22,000	23,000	74,000
Capital equipment				
Recurring[c]	26,000			26,000
Nonrecurring	69,000			69,000
Subtotal	$289,000	$131,000	$122,000	$542,000
Development Costs				
Operating labor and material				
Source fabrication development	$ 50,000	$ 55,000	$ 25,000	$130,000
Capsule fabrication development[d]	87,000	30,000		115,000
Capital equipment	7,500	2,500		10,000
Subtotal	$142,500	$ 87,500	$ 25,000	$255,000
Total	$431,500	$218,500	$147,000	$797,000

[a]Includes $15,000 die-body material cost.

[b]Includes $16,000 capsule material cost.

[c]Equipment with life expectancy equal to duration of this program.

[d]Includes $7,000 for capsule material to be used in development.

Table 4. Manpower Requirements by Fiscal Year to Produce a 34 kw(th) $^{90}SrTiO_3$ Source in the ORNL Fission Products Development Laboratory

	FY 1	FY 2	FY 3
Fabrication labor			
Technical	1.25	1.35	1.1
Technician	0.05	0.3	0.9
Chemical operator	1.1	1.2	1.0
Craft support	1.8	0.35	0.35
Miscellaneous	0.1	0.2	0.2
Development labor			
Technical	1.8	1.3	0.5
Technician	0.8	0.4	
Craft support	0.5	0.2	

An example of escalation of costs assuming (1) a 6% increase in the cost of doing business per year, and (2) that FY 1 is FY 73, FY 2 is FY 74, and FY 3 is FY 75 is as follows:

	FY 1 (73)	FY 2 (74)	FY 3 (75)
January 1, 1971 costs with no escalation	$431,500	$218,500	$147,000
Escalated costs on above assumptions	$471,100	$252,900	$170,100

REFERENCES

1. R. A. Robinson, Isotope Kilowatt Program Task 1 — Conceptual Design and Evaluation, USAEC Report ORNL-TM-2366, Oak Ridge National Laboratory, January 1970.

2. A. P. Fraas, Program Director, Isotope Kilowatt Program Quarterly Progress Report for Period Ending March 31, 1970, USAEC Report ORNL-TM-3011, Oak Ridge National Laboratory, July 1970.

3. A. P. Fraas, Program Director, Isotope Kilowatt Program Quarterly Progress Report for Period Ending June 30, 1970, USAEC Report ORNL-TM-3099, Oak Ridge National Laboratory, September 1970.

4. A. P. Fraas, Program Director, Isotope Kilowatt Program Quarterly Progress Report for Period Ending September 30, 1970, USAEC Report ORNL-TM-3214, Oak Ridge National Laboratory, December 1970.

5. A. P. Fraas, Program Director, Isotope Kilowatt Program Quarterly Progress Report for Period Ending December 31, 1970, USAEC Report ORNL-TM-3292, Oak Ridge National Laboratory, February 1971.

Internal Distribution

1. S. E. Beall
2. T. A. Butler
3. W. B. Cottrell
4. W. C. Cox
5. F. L. Culler
6. R. G. Donnelly
7-16. A. P. Fraas
17. J. H. Frye, Jr.
18. J. H. Gillette
19. A. G. Grindell
20. K. W. Haff
21. H. W. Hoffman
22. R. S. Holcomb
23. P. R. Kasten
24. M. E. Lackey
25. E. Lamb
26. M. E. LaVerne
27. D. B. Lloyd
28. M. I. Lundin
29. R. N. Lyon
30. R. E. MacPherson
31. H. C. McCurdy
32. A. J. Miller
33. A. M. Perry
34. R. A. Robinson
35. M. W. Rosenthal
36. A. F. Rupp
37-46. G. Samuels
47. A. W. Savolainen
48. A. C. Schaffhauser
49. M. J. Skinner
50. A. M. Smith
51. I. Spiewak
52. D. A. Sundberg
53. D. B. Trauger
54. J. J. Tudor
55. A. M. Weinberg
56. G. D. Whitman
57. J. V. Wilson
58. H. C. Young
59. Biology Library
60-61. Central Research Library
62-63. Y-12 Technical Library
Document Reference Section
64-93. Laboratory Records Department
94. Laboratory Records Department (RC)

External Distribution

95. F. P. Baranowski, Division of Production, AEC, Washington, D.C. 20545
96. D. R. Bartz, Jet Propulsion Lab., NASA, 4800 Oak Grove Drive, Pasadena, California 91103
97. H. Bibb, Naval Facilities Engineering Command, Washington, D.C. 20390
98. Les Chadbourne, AiResearch Manufacturing Company, 402 S. 36th Street, Phoenix, Arizona 85034
99. Joe Clemente, Sundstrand Aviation, 1100 Connecticut Avenue, N.W., Washington, D.C. 20036
100. D. F. Cope, RDT Site Office, ORNL
101. W. M. Crim, Jr., Research and Technology Department, Building 322, Ft. Belvoir, Virginia 22060
102. R. R. Dahlen, Advanced Engineering, 3M Company, Building 551, 2501 Walnut Street, Roseville, Minnesota 55113
103. R. V. Degner, Rocketdyne, 6633 Canoga Avenue, Canoga Park, California 91303
104. R. N. Endebrock, Isotopic Auxiliary Power Branch, AEC, Washington, D.C. 20545
105. R. E. English, NASA, Lewis Research Center, Cleveland, Ohio 44135

106. E. E. Fowler, Division of Isotopes Development, AEC, Washington, D.C. 20545
107. N. C. Gibbon, Cryogenic Products Department, Linde Division, P.O. Box 44, Tonawanda, New York 14150
108. J. C. Graf, General Electric, Valley Forge, Pennsylvania 19481
109-113. W. D. Holloman, Division of Reactor Development and Technology, AEC, Washington, D.C. 20545
114. A. E. King, Westinghouse, Lima, Ohio 45801
115. M. Klein, Division of Reactor Development and Technology, AEC, Washington, D.C. 20545
116. W. W. Logvin, Aerojet Liquid Rocket Company, Department 2400, P.O. Box 13000, Sacramento, California 95813
117. J. J. Lynch, NASA Headquarters, Washington, D.C. 20546
118. S. V. Manson, NASA Headquarters, Washington, D.C. 20546
119. R. F. Mather, NASA, Lewis Research Center, Cleveland, Ohio 44135
120. W. Mathis, Westinghouse Astronuclear Laboratory, P.O. Box 10864, Pittsburgh, Pennsylvania 15236
121. R. E. Niggeman, Sundstrand Aviation, 4747 Harrison Avenue, Rockford, Illinois 61101
122-126. Nuclear Engineering Division, Naval Facilities Engineering Command, Washington, D.C. 20390
127. J. Pidkowicz, RDT Site Office, ORNL
128. W. D. Pouchot, Westinghouse Astronuclear Laboratory, P.O. Box 10864, Pittsburgh, Pennsylvania 15236
129. C. R. Ross, Savannah River Laboratory, Aiken, S.C. 29801
130. George Shepherd, Fairchild Technology Corporation, One Goddard Drive, Rockaway, New Jersey 07866
131. G. W. Sherman, Aeronautical Space Power Division, Air Force Aeronautical Propulsion Laboratory, Wright-Patterson Air Force Base, Ohio 45433
132. Anthony Stathoplos, Nuclear Technology Corporation, 116 Main Street, White Plains, New York 10600
133. B. Sternlicht, Mechanical Technology, Inc., 968 Albany-Shaker Road, Latham, New York 12110
134. D. Stewart, Battelle Northwest Laboratory, Richland, Washington 99352
135. P. Swenson, Jr., Swenson Research Inc., 5135 Richmond Road, Bedford Heights, Ohio 44146
136. J. E. Taylor, Thompson-Ramo-Wooldridge, 23555 Euclid Avenue, Cleveland, Ohio 44117
137. W. B. Taylor, Technical Director, U.S. Army Mobility Equipment Research and Development Center, Ft. Belvoir, Virginia 22060
138. T. F. Widmer, Thermo Electron Corporation, 85 First Avenue, Waltham, Massachusetts 02173
139. E. S. Wilson, Space Nuclear Systems, AEC, Germantown, Maryland 20767
140-141. Division of Technical Information Extension (DTIE)
142. Laboratory and University Division, ORO