LOCKHEED MARTIN ENERGY RESEARCH LIBRARIES
3 4456 0514467 0

CENTRAL RESEARCH LIBRARY
DOCUMENT COLLECTION

OAK RIDGE NATIONAL LABORATORY

operated by

UNION CARBIDE CORPORATION

for the

U.S. ATOMIC ENERGY COMMISSION

ORNL-TM-3393

cy. 139

CONTROLLED-TREND PARAMETER VARIATION TESTS ON THE OSW WRIGHTSVILLE BEACH THREE-STAGE FLASH EVAPORATOR, AUGUST 1970

S. J. Ball N. E. Clapp, Jr. J. G. Delene

OAK RIDGE NATIONAL LABORATORY
CENTRAL RESEARCH LIBRARY
DOCUMENT COLLECTION
LIBRARY LOAN COPY
DO NOT TRANSFER TO ANOTHER PERSON
If you wish someone else to see this document, send in name with document and the library will arrange a loan.

NUCLEAR DESALINATION PROGRAM

R. P. Hammond, Director

NOTICE This document contains information of a preliminary nature and was prepared primarily for internal use at the Oak Ridge National Laboratory. It is subject to revision or correction and therefore does not represent a final report.

This report was prepared as an account of work sponsored by the United States Government. Neither the United States nor the United States Atomic Energy Commission, nor any of their employees, nor any of their contractors, subcontractors, or their employees, makes any warranty, express or implied, or assumes any legal liability or responsibility for the accuracy, completeness or usefulness of any information, apparatus, product or process disclosed, or represents that its use would not infringe privately owned rights.

ORNL-TM-3393

Contract No. W-7405-eng-26

CONTROLLED-TREND PARAMETER VARIATION TESTS ON THE OSW WRIGHTSVILLE BEACH THREE-STAGE FLASH EVAPORATOR, AUGUST 1970

S. J. Ball N. E. Clapp, Jr. J. G. Delene

NUCLEAR DESALINATION PROGRAM

R. P. Hammond, Director

NOVEMBER 1971

OAK RIDGE NATIONAL LABORATORY
Oak Ridge, Tennessee 37830
operated by
UNION CARBIDE CORPORATION
for the
U.S. ATOMIC ENERGY COMMISSION

LOCKHEED MARTIN ENERGY RESEARCH LIBRARIES

3 4456 0514467 0

CONTENTS

	Page
List of Figures	v
List of Tables	vi
Abstract	1
1. Introduction	1
2. The Trend Test Method	3
3. General Description of the Evaporator	6
4. Instrumentation and Controls	6
4.1 Equipment	6
4.2 Measurement Consistency Checks	10
5. Results of Nonequilibrium Loss Correlation Tests	12
5.1 Definitions and Basic Measurement Problems	12
5.2 Test-Stage Nonequilibrium Loss Correlation	14
5.3 Inlet-Stage Nonequilibrium Loss Correlation	16
6. Results of Interstage Orifice Flow Rate Correlation Tests	23
7. Effects of Antifoam and Acid Additions and Condenser Bundle Venting Rate Changes	29
7.1 Antifoam Effects	29
7.2 Acid Effects	29
7.3 Condenser Bundle Venting Rate Effects	34
8. Discussion of Results	34
8.1 Combined Effects of Nonequilibrium Loss and Orifice Flow Behavior on Stage Operating Characteristics	34
8.2 Variations in Overall Test Stage Efficiency	35
8.3 Comparison of Nonequilibrium Loss and Orifice Flow Data with Current Design Correlations	36
9. Conclusions and Recommendations	39
10. Appendix	46

CONTENTS (continued)

Page

10.1 Test Stage Distillate Rate Measurement 46

10.2 Currently Used Design Equations 48

11. References 51

LIST OF FIGURES

		Page
1.	OSW/BLH 3-Stage Flash Evaporator, August 1970	7
2.	Additions to BLH Instrumentation	8
3.	RTD Wet-Bulb Assembly	9
4.	Systematic Error in Flashdown Measurement Using Tray Brine RTD Probes	13
5.	Temperature Diagram Showing Definition of Nonequilibrium Loss (Δ')	14
6.	Calculated vs Measured Test Stage Δ'	17
7a.	Sample Trend Test Results: Δ' vs Test Stage Brine Level	18
7b.	Sample Trend Test Results: Δ' vs Test Stage Flashdown	19
8.	Test Stage Inlet Orifice Flow Equation - Total Head vs Upstream Brine Level for Constant Flow and Level Difference	28
9.	Discharge Coefficient vs Upstream Stage Brine Level Showing Example of Data Point Selection	32
10.	Effects of Antifoam Additions on Test Stage Δ' Correlation Errors	33
11.	Test Stage Overall Cooling Effectiveness vs Tray Brine Level	37
12.	Comparison of Measured and Calculated Values of Test Stage Δ' Showing Dependence of Δ' on Flashdown	38
13.	Comparison of Measured and Calculated Values of Interstage Orifice Flowrate Showing Independence of Flow on Total Head	42

LIST OF TABLES

Page

1. Ranges of Test Stage Operating Conditions 15
2. Test Conditions for Test Stage Nonequilibrium Loss Runs - Comparison of Measured and Calculated Values 20
3. Ranges of Inlet Stage Operating Conditions 22
4. Test Conditions for Inlet Stage Nonequilibrium Loss Runs - Comparison of Measured and Calculated Values 24
5. Ranges of Operating Conditions for Orifice Flow Tests 26
6. Test Conditions for Orifice Flow Trend Tests - Comparison of Measured and Calculated Flow (Eq. 3) 30
7. Test Conditions for Test Stage Nonequilibrium Loss Runs - Comparison of Measured Values with Design Equation Calculations 40
8. Test Conditions for Orifice Flow Trend Tests - Comparison of Measured Flow with Design Equation Calculations 44

CONTROLLED-TREND PARAMETER VARIATION TESTS ON THE OSW WRIGHTSVILLE BEACH THREE-STAGE FLASH EVAPORATOR, AUGUST 1970

S. J. Ball N. E. Clapp, Jr. J. G. Delene

ABSTRACT

A series of tests was run on a three-stage experimental flash evaporator at the Office of Saline Water Test Station at Wrightsville Beach, North Carolina in August 1970. The purpose of these tests was to determine correlations to be used in dynamics and control studies of future large-scale multistage flash (MSF) desalting plants connected to nuclear-reactor heat sources.

Results from controlled-trend tests to study nonequilibrium losses and interstage orifice brine flow behavior were analyzed and correlations were determined. This trend test method greatly enhanced the output rate of useful information. With special consideration given to measurement and data-acquisition problems, internally consistent and reproducible results were obtained.

The combined effects of nonequilibrium loss and hydraulic behavior on stage and overall plant stability and operability were studied. The resulting data and correlations were compared with the currently used design correlation, and recommendations were derived for future tests.

Keywords: *experimental data + *Wrightsville Beach Plant + *multistage flash distillation + *nuclear energy sources + *brine flow + *dynamic characteristics + flash evaporation + parametric studies + hydraulic structures + operating experience + orifices

---

1. INTRODUCTION

A major objective of the experimental desalting program is to obtain information necessary for plant designers to predict the performance characteristics of large-scale multistage flash (MSF) plants. Although most work of this type is supported by the Office of Saline Water (OSW), the Atomic Energy Commission (AEC) is sponsoring studies of coupling and control characteristics of large MSF plants

which are to be connected to a nuclear heat source by a turbine-generator plant. A series of AEC-sponsored tests were run on the OSW three-stage flash evaporator [designed, built, and operated by the Baldwin-Lima-Hamilton Corp. (BLH)] at Wrightsville Beach, N. C., from August 3 to 14, 1970. The main purpose of these tests was to design models and to determine correlations for use in a simulator[1] so that the dynamics of large MSF plant designs can be predicted. Ultimately, the simulation will include the coupled turbine-generator and reactor plant dynamics.

In this report, the authors discuss only two tests: (1) trend tests made to investigate nonequilibrium losses and interstage orifice flow behavior, and (2) chemistry effects tests. Other tests made during August 3-14 included dynamics tests and blow-through experiments, and these will be reported elsewhere.[2-4]

Specifically, the trend tests were designed to obtain accurate nonequilibrium loss and orifice flow-rate data and correlations for one particular test stage configuration, which was a 7-ft long stage with no baffles or flashing devices. This configuration had quite poor efficiency and operational characteristics, and clearly would be undesirable for use in a production plant. The data, correlations, and observations derived from the tests are useful, however, in that they demonstrate the kinds of relationships and problems that may be encountered in other stage designs. The test procedures, data collection, and analysis techniques which were demonstrated would also be directly applicable to other stage designs.

Although the development of a stage design that has good efficiency and operational characteristics is a reasonable objective, it is, however, only part of the problem of MSF plant design. It is also necessary to be assured of reasonable behavior when a large number of stages are coupled together, as well as when the entire evaporator is coupled to its heat source. Large-plant designers should keep these broader considerations in mind before incorporating "improved" stage designs in such plants.

The authors are grateful to Mr. E. N. Sieder, formerly of the Office of Saline Water, U.S. Department of the Interior, for making the evaporator available and to all the Wrightsville Beach BLH personnel for their help, particularly Mr. Merl Neal.

2. THE TREND TEST METHOD

The use of controlled-trend parameter variation tests on evaporators was conceived during tests on the ORNL "flow box," a leaky, plywood, single-phase hydraulic mock-up of a three-stage MSF plant. During head vs flow tests, a natural leakage of water from the box caused convenient, gradual head variations. When data taken periodically were analyzed, acceptable and smoothly varying correlations were calculated.

The basic idea of the trend test is to measure the response of a plant while one input parameter is slowly varied over the range of interest, holding all other input parameters (where possible) fixed.

The usual method of obtaining steady-state correlation data from evaporators is to let the entire plant settle at a desired set of operating conditions and then to record the required data. This procedure is repeated at other specified sets of conditions, and several such runs can be made in a day. Making use of data from a number of such tests, one can calculate variations in the response functions of interest, such as non-equilibrium losses or discharge coefficients, and then correlate these variations with input parameters, such as brine levels, flashdown, flow rates, etc. The problem with this method, however, is that the resulting correlations usually are inconclusive, in that the differences between the data and the "best fit" equations are excessive. We suspected that the cause of one major difficulty was that these response functions are sensitive to small changes in several different input parameters, some of which would vary between tests and from day to day. Significant errors can result if these parameters are not reestablished accurately or if they are not measured accurately and considered in the correlation.

In contrast to the usual method just described, a feature of the trend test method is that the changes in the input parameter being varied are likely to be responsible for changes in the response function; hence, deviations in the response can be attributed with greater confidence to deviations in the "trended" parameter.

Another important feature of the trend test method is its greater efficiency (in terms of an increased information rate output). For example, while a trended parameter is being varied slowly over its full range of interest, data are taken continuously. Since during this period of variation the entire plant does not have to be in an equilibrium condition, the trended parameter can be varied over the total range of interest in much less time than in the case of steady-state tests. A most important point is that the maximum rate at which the parameter can be varied is determined by the stage dynamics--not the entire plant dynamics--which makes the rate usually an order of magnitude lower. To consider a subsystem (the test stage) in a quasi-steady-state condition, while the total system (the test plant) is not in such a condition, is a well-established technique. In nuclear reactor kinetics, one can accurately calculate the initial response to a change in reactivity by assuming that the prompt neutrons are instantly in equilibrium (i.e., their lifetime equals zero instead of $\sim 10^{-5}$ sec) and by neglecting the much slower effects of the delayed neutron and thermal feedbacks. Likewise for the trend tests, the assumption that a stage is in equilibrium will be valid if the trend rate is low enough. The maximum allowable rate can be calculated or determined by trial and error.

For the BLH 7-ft test stage, typical tray brine and condenser tube holdup times were about 3 and 6 sec, respectively. If one assumes (conservatively) a total stage-holdup and heat-transfer time-constant of 20 sec and if the input temperature were changed at the rate of 1°F/20 sec, the maximum output "error," or deviation from the true steady-state value, would be 1°F. Similarly, for an input rate of 1°F/200 sec, (0.005°F/sec), the maximum output error would be 0.1°F. Typical rates used in these trend tests for nonequilibrium loss measurements were 0.001-0.002°F/sec; the maximum rate was 0.003°F/sec. The rates were limited more by the low data-logging rate than the evaporator time-constants. Trend tests for determining orifice flow characteristics were run at much higher rates because the response times of the tray brine hydraulics were faster and the logging rates of the magnetic tape logger (1 complete scan/sec) were higher . The typical trend rates in these tests were as much as 10 times higher than those in the nonequilibrium loss tests.

In general, the results of the trend tests compared favorably with those of the steady-state tests, indicating that the trending rates used were satisfactory.

One inherent problem in evaporator testing is that it is usually not possible to vary only one evaporator parameter at a time. This is illustrated as follows. If we consider an orifice flow-rate test to determine effects of flashdown on the discharge coefficient and assume that the flashdown is varied between near zero and maximum while the flow rate, downstream level, and the orifice height are held fixed, we shall find that as the flashdown increases the vapor pressure difference (ΔP_V) across the orifice will increase, making the upstream brine level decrease. Thus, any effects on the discharge coefficient are due both to the increasing flashdown (and ΔP_V) and the decreasing upstream level. To determine the individual effects requires other types of tests that will enable separation of these effects during analysis of the data.

Derivation of the forms of empirical correlation equations (even if one assumes that all significant parameters are being considered) is a difficult task for nonlinear multiparameter devices such as flash evaporators. Without the proper forms, even very clever coefficient variation schemes will not enable good data fits. From observation of evaporator behavior during trend tests, the forms of good correlating equations often become readily apparent to the observer. Examples of this are described in Sect. 5.

Final optimization of coefficients and fine-structure model details are usually left to automated means. Many such means, i.e., computer codes, are available.

Implementation of trend tests requires more control devices and instrumentation than are usually available on test evaporators. Also, efficient data-collecting and analysis equipment is required, since the information output rate is usually large. At the BLH plant, several control systems and transmitting instruments were added for the tests. Data were recorded both on the BLH data acquisition system (DAS), which produced data on IBM cards, and on an ORNL Beckman-Anscan magnetic tape logger. Both the card and the tape outputs were later analyzed on ORNL computers. One serious drawback of this procedure was that practically all of the data were analyzed after the tests had been completed, i.e., very little information from analyzed data could be applied in making decisions on how to conduct the remaining tests. An on-line computer data

system will be installed in place of the DAS to provide virtually instantaneous data analysis. The system is scheduled to be installed and operational in late 1971.

3. GENERAL DESCRIPTION OF THE EVAPORATOR

The three-stage plant was designed to simulate a section of a full-scale commercial desalting plant, primarily for the purpose of studying flashing phenomena. With appropriate control of the heating and cooling sources, stage brine temperatures from 100 to 250°F, flashdowns from 1 to 6°F, and specific flows up to 1.2×10^6 lb/hr per ft of width could be achieved. Brine was circulated through the 21-in. wide, 31-ft long, and 6-ft 8-in. high flash chamber, and then recycled back through a brine cooler, three external condensers, and a brine heater before it reentered the inlet stage (Fig. 1). Normally the test (middle) stage length is 15 ft; however, its length had been reduced to 7 ft shortly before these tests were run. (The 7-ft length was required for another test series unrelated to these tests.)

4. INSTRUMENTATION AND CONTROLS

4.1 Equipment

Of the instrumentation and controls added for the tests (Fig. 2), the d/p transmitter, converters, recorders, and controllers were all industrial-grade electronic instruments, except that the orifice height transmitter, SX, was designed at ORNL. Signals from these instruments were conditioned for readout and logging by the BLH data-acquisition system (DAS) and an ORNL magnetic tape logger. Selected variables were monitored by a two-pen strip-chart recorder during the trend and dynamics tests.

In addition to the added instruments, the original BLH temperature measurement system was used. This system consists of ~40 high-quality platinum resistance temperature detectors (RTD's), each with an individual half-bridge completion network and all tied to a common power supply. The RTD circuit outputs were 1 mV/°F and generally

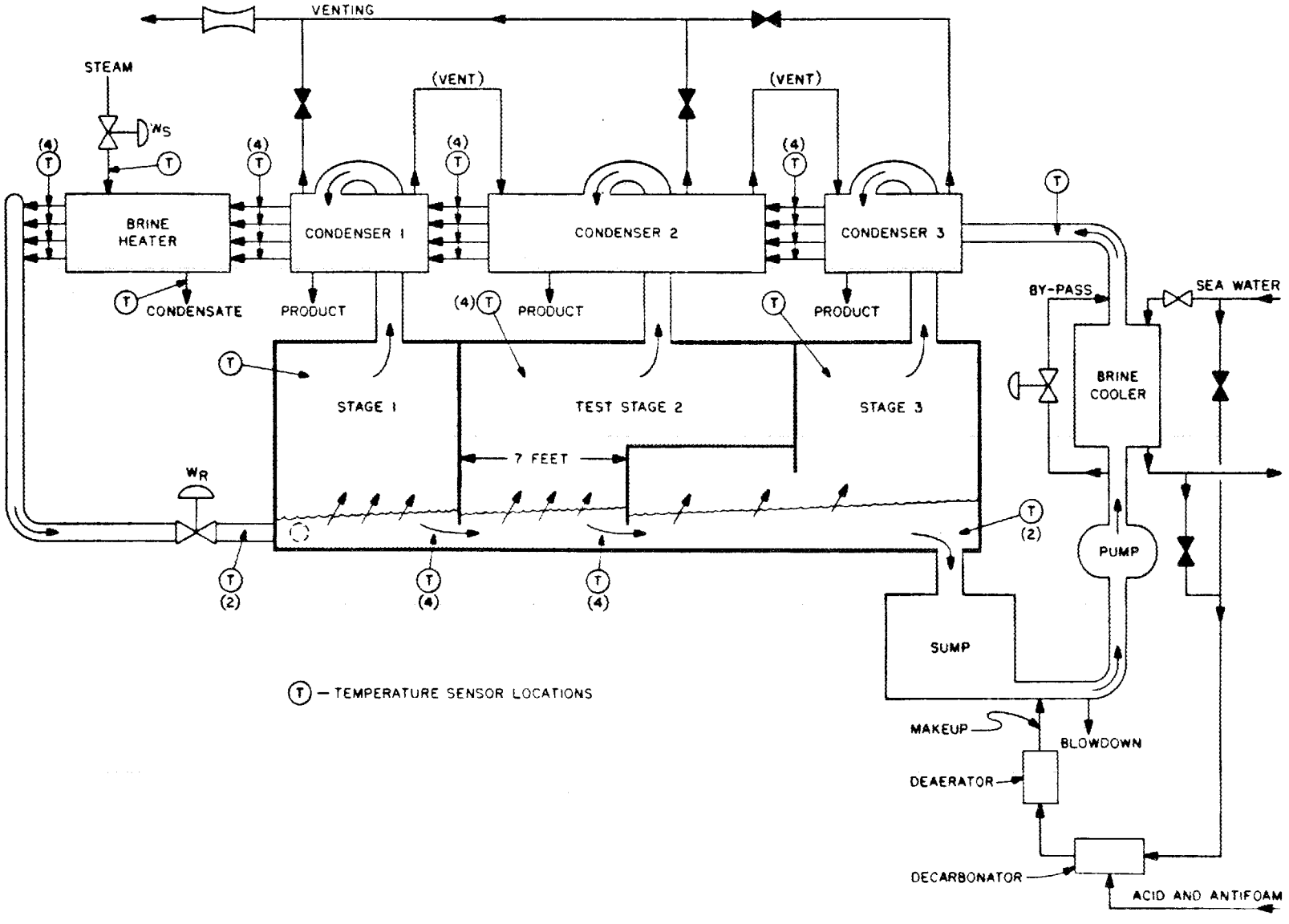

Fig. 1. OSW/BLH 3-Stage Flash Evaporator, August 1970.

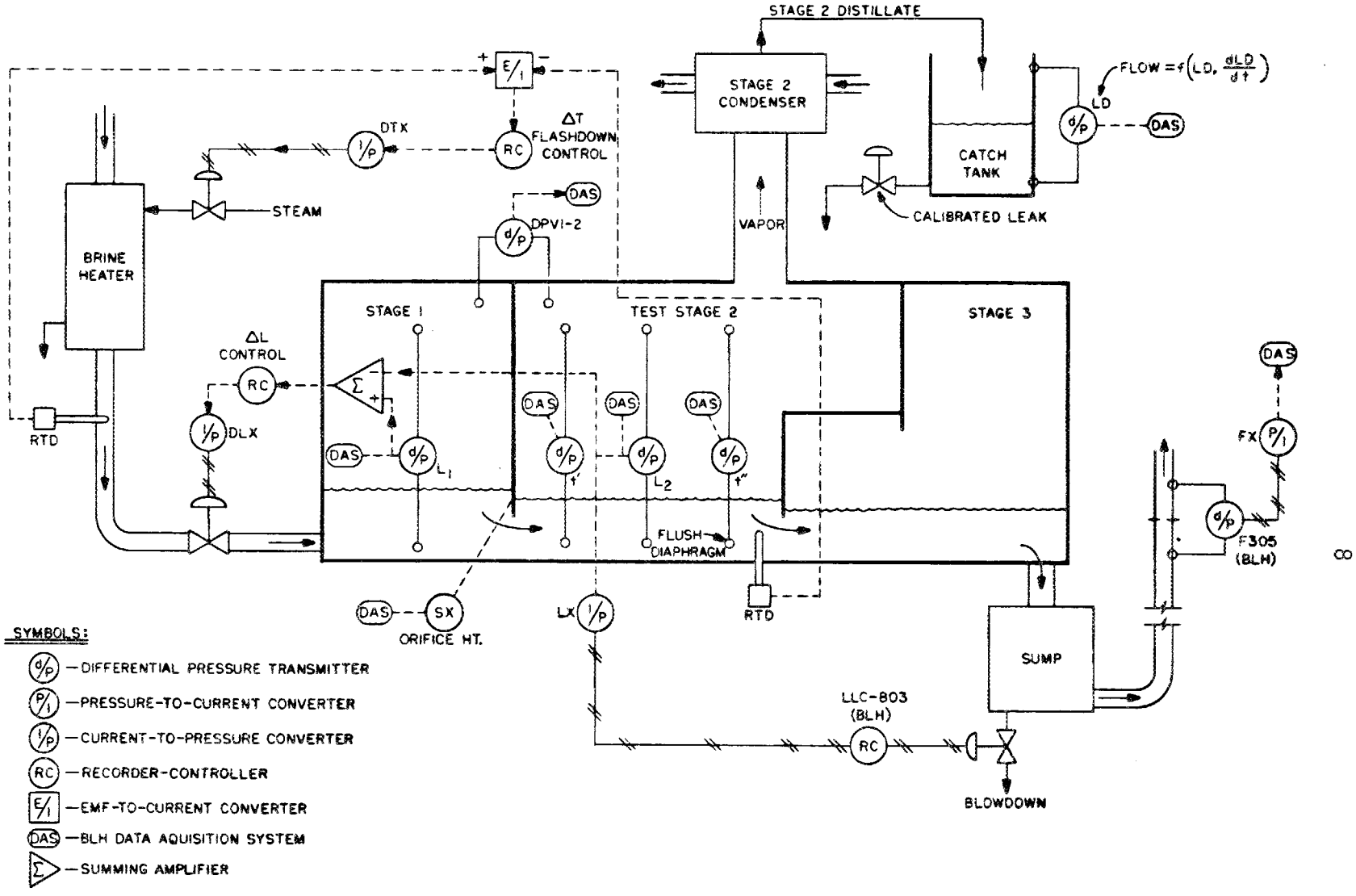

Fig. 2. Additions to BLH Instrumentation.

set to read directly in degrees Fahrenheit (and tenths) on the DAS. The locations of these RTD's are shown in Fig. 1.

To measure the saturation (wet bulb) vapor temperature in the test stage, two special wick assemblies (Fig. 3) were installed, using standard RTD elements as sensors. However, this sensor was not completely successful. In several runs, measurements by these wet-bulb probes agreed within 0.5°F with corresponding vapor pressure measurements, but in other runs they were as much as 3°F lower. We conjectured afterwards that the wick was too heavy, occasionally resulting in overcooling. We plan to use a lighter wick in subsequent tests.

Controllers for inlet-plus-test-stage flashdown temperature (by varying steam flow to the brine heater) and stage 1-to-2 brine level difference (by varying the recirculating brine flow rate) were added for the trend tests. An alternative to the flashdown temperature controller was also used on occasion; by substitution of a fixed (dummy) signal for the stage 2 outlet temperature signal, the stage 1 inlet temperature was controlled directly. The original method of controlling the sump brine level by

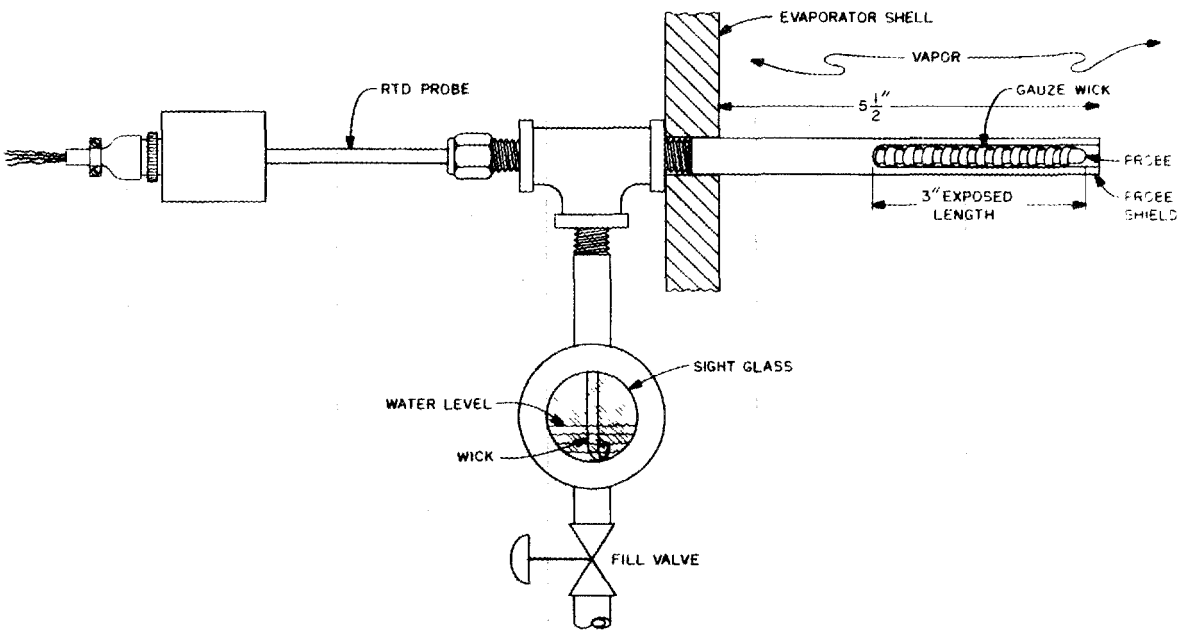

Fig. 3. RTD Wet-Bulb Assembly.

varying the blowdown was modified so that the brine level in the test stage could be controlled instead. An additional controller (not shown in Fig. 2) was installed between the condenser and the catch tank. This controller was added because changes in inventory in the distillate tank during trend runs had given false measurements of the distillate rate.

While most of the control and measurement methods were standard, the continuous distillate rate measurement is explained as follows. We assumed that for a given catch tank calibrated leak opening (valve position), the leak rate was related to the depth of the water in the tank. For a fixed flow into the tank, then, there was a corresponding steady-state level. Changes in the flow rate were observed as changes in catch tank inventory; hence, the distillate rate could be computed as a function of the catch tank level plus the rate of change of the level. Details of the procedure used are given in Sect. 10.1.

The measurements not logged automatically were the test stage absolute pressure (several precision gauges), sight gauges and manometers for reading tray brine levels and stage-to-stage vapor pressure differentials, and a pH meter for monitoring blowdown brine.

4.2 Measurement Consistency Checks

Since acquisition of internally consistent data was a significant problem, the entire system was studied to determine the causes of these inconsistencies. As a result, three specific measurement procedures were developed to help improve the quality of the data:

1. In addition to ice bath calibrations, the RTD probes were calibrated in place at operating temperatures. To do this, the heating and cooling sources were shut off and the brine was circulated until the temperature around the loop became isothermal (or nearly so). Then 8 to 12 complete data scans were made with the BLH-DAS. If RTD probe drift was negligible, the data were used directly for probe calibration. In most cases, however, particularly at higher temperatures, significant drift rates were unavoidable. Hence, a computer program was designed to

normalize the data to correct for the drift, including the skew, since it took ~94 sec for a complete scan of the data. To obtain the reference temperature for each case, all RTD signals were averaged. The consistency of these measurements was confirmed by an error of < 0.1°F. At higher temperatures the corrections were a few tenths of a degree or less, but there were occasional corrections of as much as 1°F.

2. The use of an average temperature from several RTD's located in the tray brine to obtain mean inlet and outlet temperatures had been a questionable practice, because the velocity and temperature profiles in the tray brine were known to be nonuniform. A test of the validity of such measurements demonstrated clearly that this was indeed a poor practice. The test consisted of gradually lowering the brine level in the inlet stage (by decreasing the brine inventory and periodically raising the interstage orifice) while measuring the test stage flashdown, both by averaging the tray brine RTD probes (four each at the inlet and outlet) and by heat balances, i.e., both by measuring the test stage distillate rate and the condenser coolant brine ΔT. A plot of flashdown as measured by the tray brine probes (FD2M) versus flashdown measured from the condenser ΔT (FD2C) is shown in Fig. 4. In this (and other) tests, FD2C proved to be uniformly accurate when checked against distillate rate measurements. Hence, the tray brine RTD probes were no longer used to determine accurate bulk temperatures, and stage 1 and 2 tray brine outlet temperatures used in correlations were computed by subtracting flashdowns (FD1C and FD2C) from the stage 1 inlet brine temperature (TBI1). TBI1 was measured by two RTD probes in the inlet pipe. Because axial traverses of these probes during a run showed no noticeable temperature gradient, these temperatures were assumed to be good indications of the mean temperature.
3. While the effects of electrical (60 Hz) noise on the RTD readings were minimal, there was appreciable temperature fluctuation "noise" in some RTD signals. The noisiest signals were from the tray brine and the brine inlet to stage 1, where the rms fluctuations were ~0.3°F on the short (faster response) probes. For this reason, several scans of the data were required to obtain good confidence in the RTD readings. Specifically, for the two TBI1 probes, the probability that the average of one

scan of data (two samples) was ≤0.1°F of the true average was only 0.36. Thus, four scans of data (eight samples) per point were used, giving a confidence level of 0.65 for a 0.1°F tolerance (0.84 for a 0.15°F tolerance).

In addition to measurement techniques, other sources of error contributing to inconsistent data were considered, namely, effects of additions of antifoam and acid and of changes in condenser bundle venting rates. These are discussed in Sect. 7.

5. RESULTS OF NONEQUILIBRIUM LOSS CORRELATION TESTS

5.1 Definitions and Basic Measurement Problems

"Nonequilibrium loss" is one of several terms used in the industry to denote the difference between the actual and the ideal temperatures of the tray brine leaving a stage. Other equivalent terms in common use are "submergence loss," "approach to equilibrium," and "delta-prime" (Δ'). There is also some disagreement about the precise definition of nonequilibrium loss. The actual mean outlet temperature of brine from a stage is usually higher than the stage saturated vapor temperature because of two factors: (1) a chemical effect, or boiling point elevation (BPE), that is caused by impurities or dissolved solids in the brine; and (2) thermal and hydrodynamic effects caused by imperfect mixing, insufficient time for superheated brine to vaporize completely, or a greater total static head (vapor plus liquid) on the brine near the bottom of the tray which increases the brine boiling point.

In this report nonequilibrium loss is defined as only that loss which can be affected by the design of the flash chamber, i.e., only thermal and hydrodynamic effects. In Fig. 5 the relationships of the pertinent stage temperatures are shown and the definition of nonequilibrium loss is illustrated.

The values of Δ' vary considerably, depending on stage design, temperature, and other operating conditions; their general range is from ~1°F or less to 5°F. It is difficult to accurately measure Δ', because it requires measurement of a small difference between two temperatures (both of which are difficult to measure) and accurate knowledge of the boiling point elevation (BPE).

ORNL-DWG 71-10222

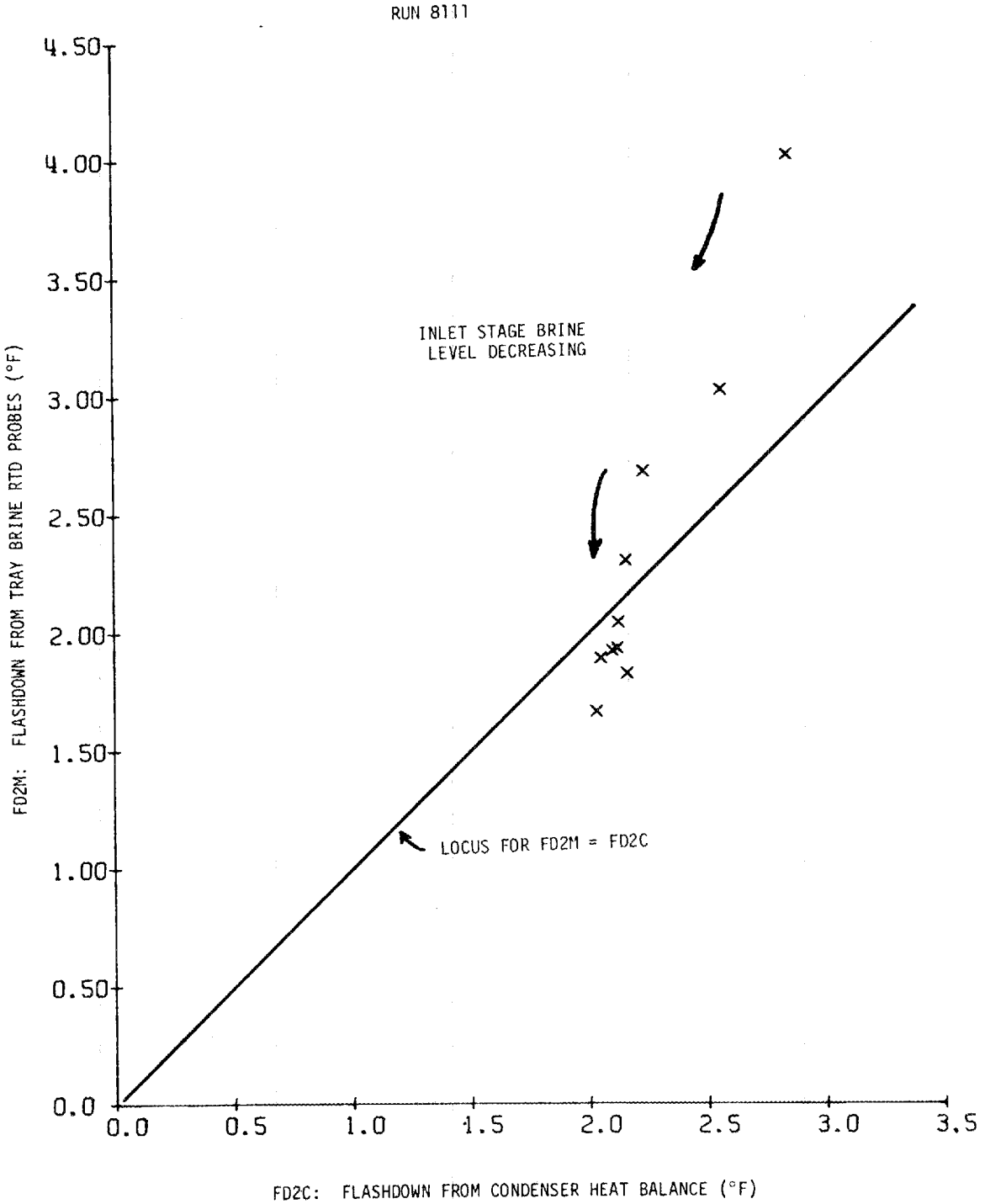

Fig. 4. Systematic Error in Flashdown Measurement Using Tray Brine RTD Probes.

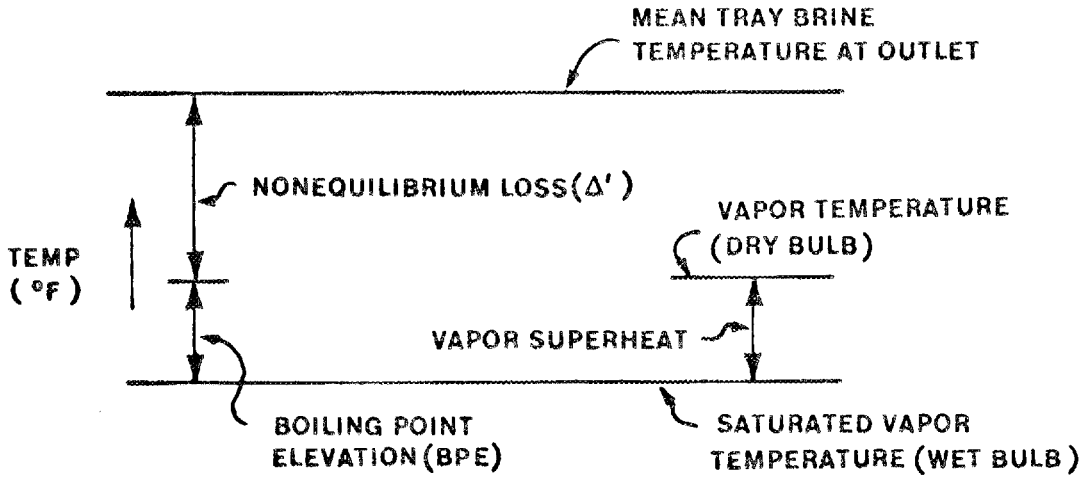

Fig. 5. Temperature Diagram Showing Definition of Nonequilibrium Loss (Δ′).

Direct measurements of the mean outlet temperature of tray brine are made complicated by nonuniform temperature and velocity distributions and by fluctuations. As discussed in Sect. 4, mean tray brine outlet temperatures derived from heat balance calculations are probably more accurate. It is also difficult to make direct measurements of wet-bulb vapor temperatures in a stage, apparently because the wick has a tendency to be either too wet or too dry. Measurement of only the dry bulb temperature is not adequate because the amount of vapor superheat is unknown and variable (Fig. 5). Inference of the saturation temperature from an absolute pressure measurement is possibly subject to error because of an unknown partial pressure from noncondensable gases.

Nonequilibrium losses discussed in Sects. 5.2 and 5.3 are based on time-averaged BLH-DAS data (an average of four or more data sets), heat-balance-derived tray brine outlet temperatures, absolute-pressure-derived saturation temperatures, and BPE values calculated from measured salt concentration and bulk temperature.

5.2 Test-Stage Nonequilibrium Loss Correlation

The test stage was a 7-ft long, 21-in.-wide empty chamber with rectangular orifices at both ends. The OSW had chosen this to be a reference (or base) case in a

series of tests that included variations of stage length and several different flashing device configurations.

The ranges of operation covered in the tests are shown in Table 1.

Table 1. Ranges of Test Stage Operating Conditions

Brine Flow Rate (lb/hr per ft width)	Temperature (°F)	Flashdown (°F)	Brine Level (in.)	Measured Δ' (°F)
$0.7 - 1.0 \times 10^6$	125 - 160	2.0 - 4.5	17 - 30	2.5 - 6.0

These data were taken with the BLH-DAS and logged on IBM cards. In addition to the temperature, flow, and level data scanned automatically (1 complete scan every 94 sec), the absolute pressure in the vapor space of the test stage was read manually with a precision gauge after every scan. Generally, these data were obtained during controlled trend tests, and steady-state runs were made occasionally to verify data obtained in the trend tests, which they did.

An empirical Δ' correlation equation was derived from a total of 90 sets of data. Each data set was an average of at least four complete BLH-DAS scans. The form of the equation was derived from observation of the trend test results. For example, there appeared to be a strong positive dependence of Δ' on brine level and a negative dependence on flashdown. The brine level effect appeared to be dependent on both level and temperature; changes in the level had less effect on Δ' at higher temperatures and at higher absolute brine levels. There was also an apparent effect due to acidity. Since acid concentration was not known, this factor in the correlation equation is approximate, at best. Attempts to detect some dependence of test stage Δ' on the brine flow rate, upstream stage Δ', and cross-product terms of level and flashdown resulted in negligible (if any) improvement in the correlation.

The resulting empirical equation for Δ' fit the data to within an rms error of 0.25°F (Fig. 6), and it applies only to the geometry of this particular stage and to the operating ranges in Table 1:

$$\Delta' \ (°F) \approx 2.05 + (0.82 - 0.0035TBI2)\ (L_\ell - 10) - 0.5FD2 - 0.35AC \qquad (1a)$$

for $L_\ell \leq 24$ in.,

$$\Delta' \ (°F) \approx 2.05 + (0.82 - 0.0035TBI2)\ (0.3L_\ell + 6.8) - 0.5FD2 - 0.35AC \qquad (1b)$$

for $L_\ell \geq 24$ in.,

where

TBI2 = test-stage tray brine inlet temperature, °F,

L_ℓ = test-stage tray brine level, in.,

FD2 = test-stage flashdown, °F,

AC = 1.0 if the loop contains acid and 0 if it does not.

These equations include all BLH-DAS trend and steady-state test data taken during the 2-week period, but not data taken during special tests of effects of antifoam and acid addition transients, condenser bundle venting transients, and blow-through characteristics. These special tests (except blow through) are described in Sect. 7.

The correlation was optimized by a manually controlled parameter search program on a time-shared computer. Since the quantity of data was not excessive, rms fit errors were calculated very efficiently for each try. With the "hands-on" feature of the time-share system the form of the equation could be modified rapidly, thus requiring much less time to achieve an optimized correlation equation than would be required with a batch computer.

A plot of measured vs calculated values of Δ' for a sample trend run shows that trends of Δ' with brine level and flashdown are quite clear (Figs. 7a and b), although other tests were required to determine the individual effects. In Table 2, some of the run parameters and measured and calculated values of test stage Δ' are tabulated. The first (or high) brine level part of run 8072 (denoted by asterisks) shows an apparent transient effect due to the addition of an antifoaming agent. (This effect is discussed in more detail in Sect. 7.)

More complete data for these runs is available from the authors on request.

5.3 Inlet-Stage Nonequilibrium Loss Correlation

An empirical equation to correlate Δ' was also determined for the inlet stage (stage 1) of the evaporator. This equation is similar to Eq. (1) derived for the test

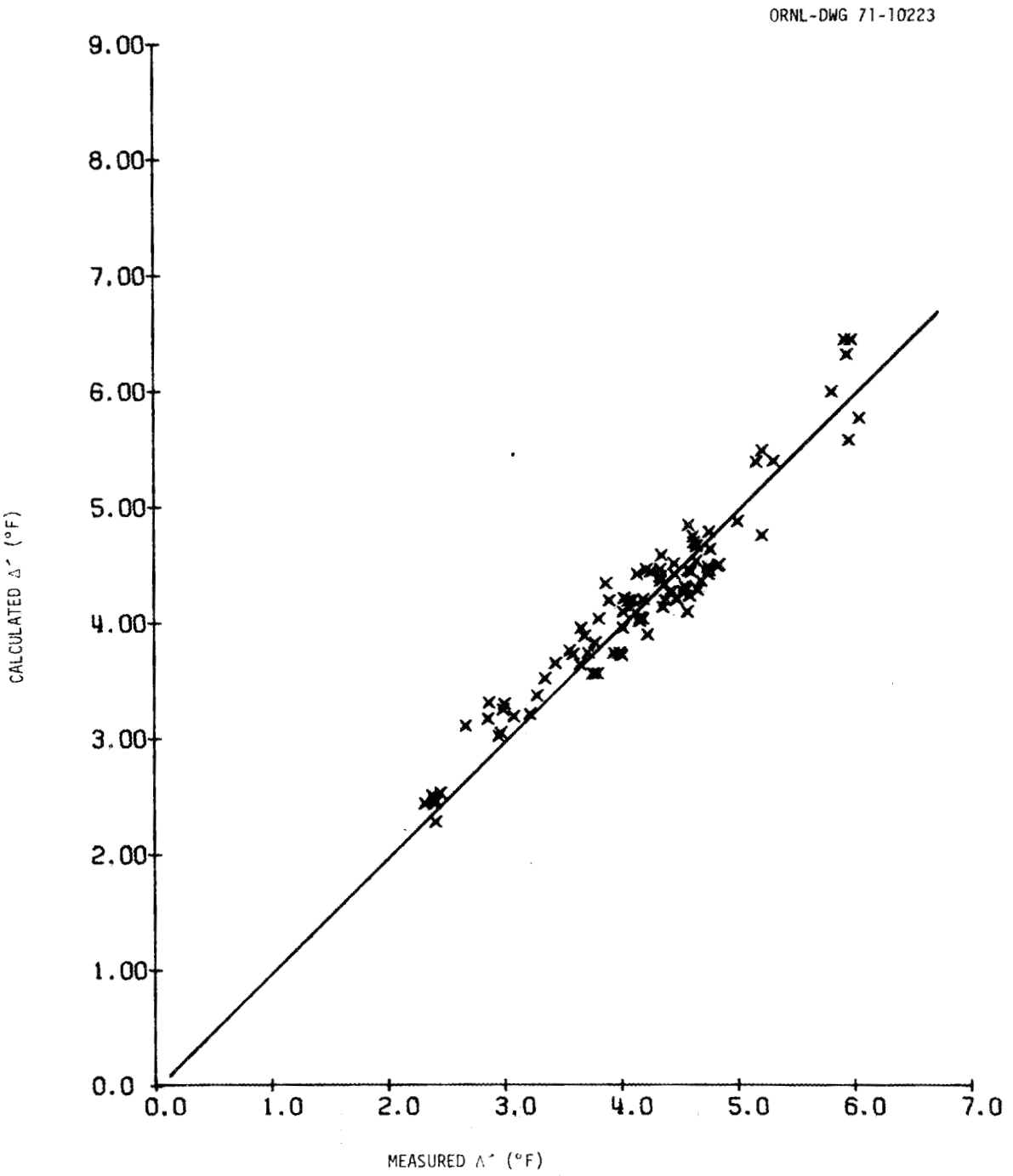

Fig. 6. Calculated vs Measured Test Stage Δ′.

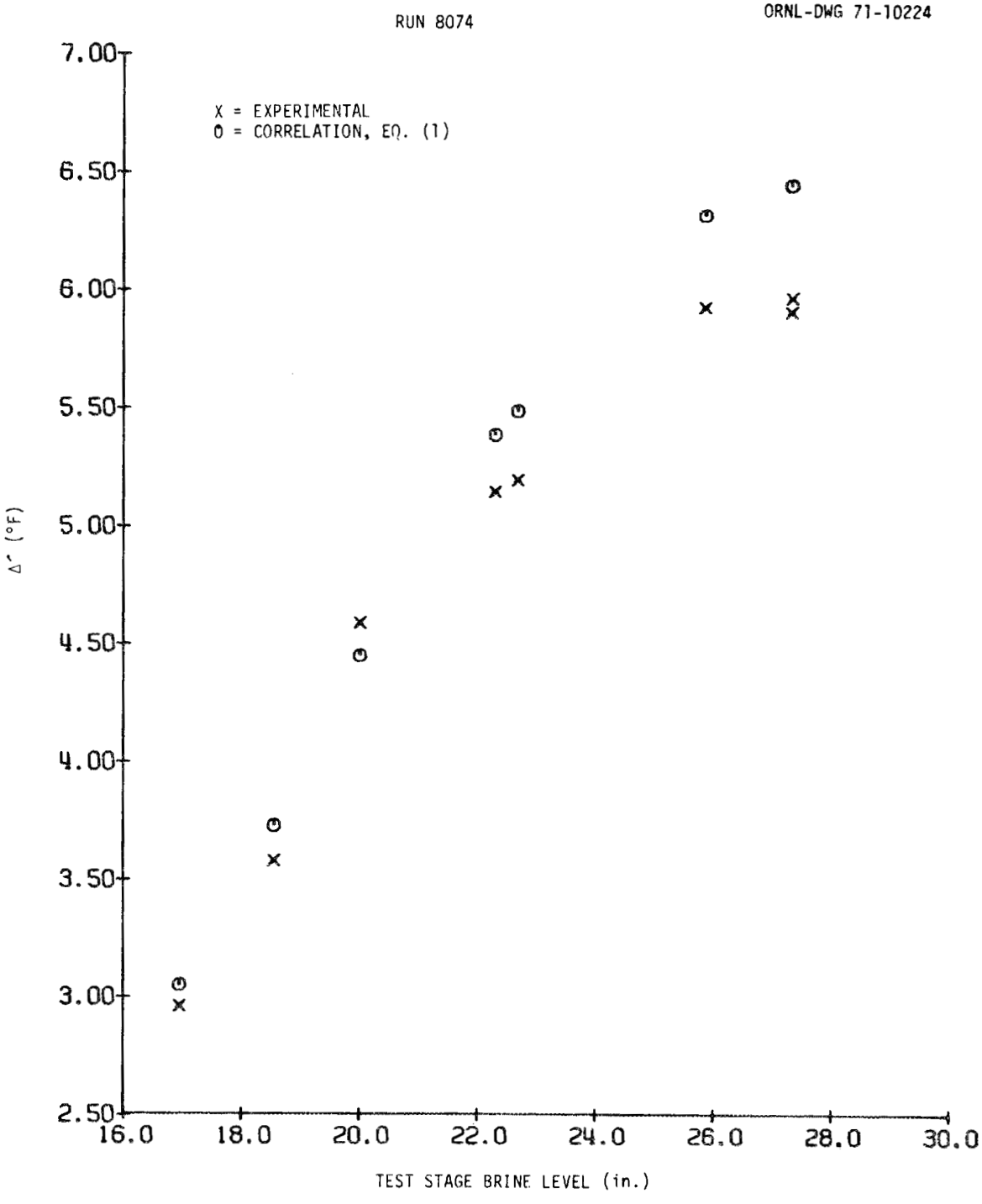

Fig. 7a. Sample Trend Test Results: Δ' vs Test Stage Brine Level.

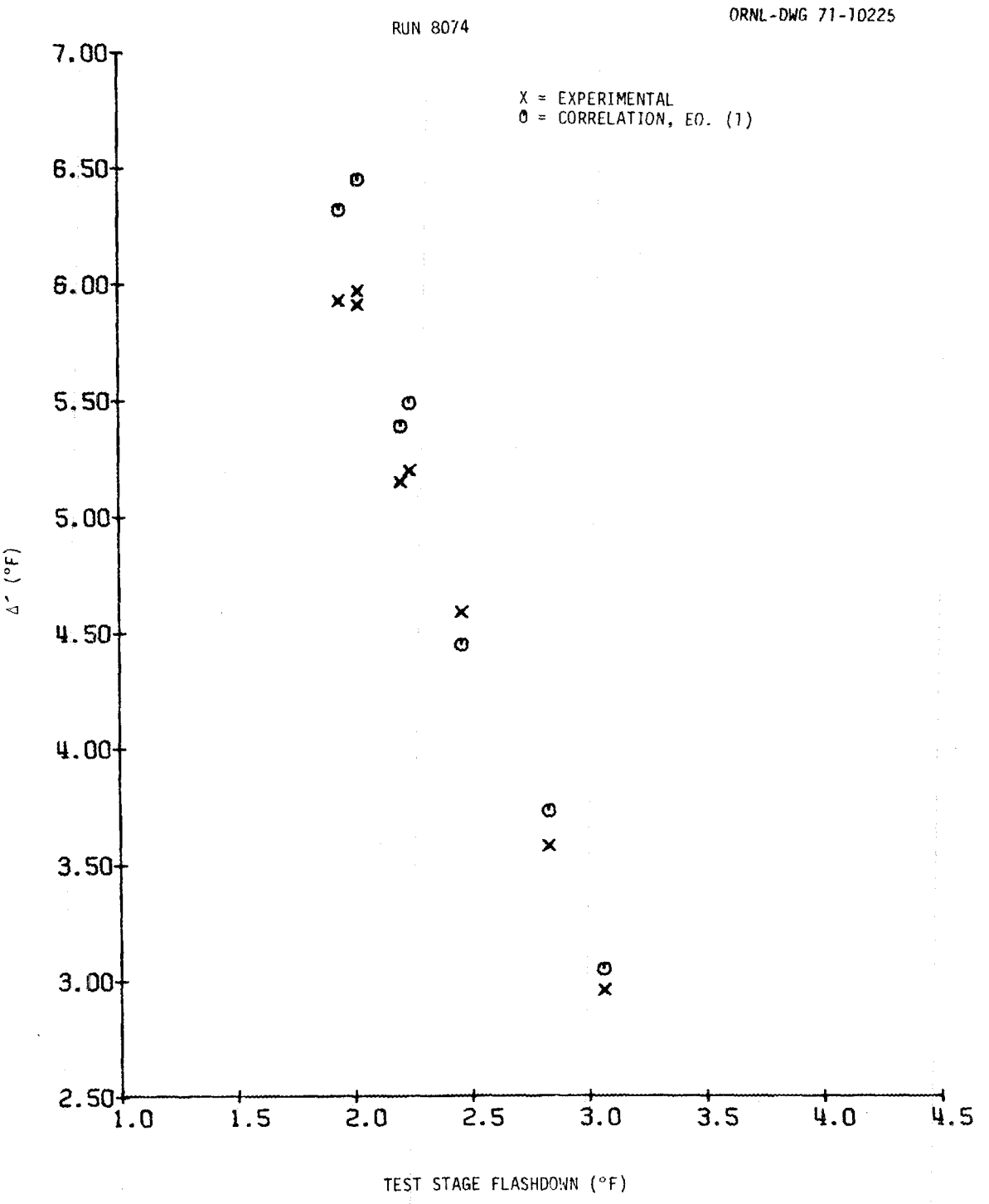

Fig. 7b. Sample Trend Test Results: Δ' vs Test Stage Flashdown.

Table 2. Test Conditions for Test Stage Nonequilibrium Loss Runs - Comparison of Measured and Calculated Values[a]

						Δ′ (stage 2)		
Pt	Run	W	L2	TB12	FD2C	Expt'l	Calc	Error
1	8062	.969	20.86	139.4	2.13	4.34	4.59	.25
2	8062	.968	20.39	139.3	2.18	4.33	4.41	.08
3	8062	.967	20.40	139.3	2.15	4.45	4.43	-.02
4	8062	.969	20.70	139.3	2.13	4.64	4.54	-.10
5	8063	.972	20.24	139.4	1.98	4.57	4.46	-.11
6	8063	.970	20.12	139.4	2.08	4.33	4.37	.04
7	8063	.967	19.91	139.4	2.26	4.18	4.21	.03
8	8063	.967	19.91	139.4	2.29	4.09	4.20	.11
9	8063	.968	19.54	139.5	2.35	3.80	4.04	.24
10	8063	.950	19.01	139.7	2.55	3.55	3.76	.21
11	8063	.921	17.92	139.8	2.71	2.86	3.31	.45
12	8063	.936	17.64	139.8	2.66	2.98	3.25	.27
13	8063	.943	17.31	139.8	2.59	2.85	3.17	.32
14	8063	.944	17.07	139.8	2.55	2.66	3.11	.45
15	8064	.974	21.28	141.1	1.93	5.20	4.76	-.44
16	8064	.974	21.66	143.3	2.24	4.76	4.64	-.12
17	8072	.966	26.36	144.2	3.36	5.86	5.01	-.85*
18	8072	.962	24.50	144.2	3.92	5.43	4.55	-.88*
19	8072	.964	24.44	143.9	3.81	5.15	4.62	-.53*
20	8072	.965	24.50	144.3	3.83	5.19	4.59	-.60*
21	8072	.962	24.26	144.4	3.85	5.16	4.55	-.61*
22	8072	.964	24.13	144.2	3.93	4.83	4.51	-.32
23	8072	.964	23.20	144.3	4.13	4.35	4.14	-.21
24	8072	.962	23.04	144.7	4.23	4.15	4.02	-.13
25	8072	.961	23.12	144.6	4.23	4.16	4.05	-.11
26	8072	.962	23.02	144.6	4.20	4.18	4.04	-.14
27	8072	.962	22.15	144.3	4.27	3.71	3.74	.03
28	8073	.958	22.03	144.7	4.36	3.64	3.64	.00
29	8073	.958	22.27	143.5	4.23	3.77	3.83	.06
30	8073	.960	22.28	143.0	4.17	3.68	3.89	.21
31	8073	.961	21.90	142.9	4.23	3.93	3.74	-.19
32	8073	.961	22.12	141.7	4.04	4.01	3.96	-.05
33	8073	.961	22.58	141.3	3.88	4.06	4.20	.14
34	8073	.960	21.93	140.4	3.75	4.01	4.10	.09
35	8073	.958	21.95	140.1	3.70	4.07	4.14	.07
36	8073	.958	22.15	139.6	3.75	3.89	4.20	.31
37	8073	.959	21.88	138.4	3.64	4.02	4.22	.20
38	8073	.961	22.16	137.6	3.43	4.25	4.45	.20
39	8073	.959	21.74	136.8	3.42	3.86	4.35	.49
40	8073	.958	21.72	136.2	3.29	4.13	4.43	.30
41	8073	.956	21.61	135.5	3.19	4.21	4.47	.26
42	8073	.957	21.28	134.5	3.03	4.33	4.47	.14
43	8073	.958	20.93	133.2	2.80	4.45	4.52	.07
44	8073	.960	21.14	132.2	2.66	4.62	4.70	.08
45	8073	.960	21.13	131.7	2.51	4.75	4.79	.04
46	8073	.960	20.88	130.9	2.48	4.61	4.75	.14
47	8073	.963	21.04	130.6	2.42	4.57	4.85	.28

[a]See page 43 for explanation of column headings.

Table 2. Test Conditions for Test Stage Nonequilibrium Loss Runs - Comparison of Measured and Calculated Values (continued)[a]

Pt	Run	W	L2	TBI2	FD2C	Δ′ (stage 2) Expt'l	Calc	Error
48	8074	.972	27.29	131.1	2.02	5.97	6.45	.48
49	8074	.970	27.28	131.2	2.02	5.91	6.45	.54
50	8074	.966	25.82	131.4	1.94	5.93	6.32	.39
51	8074	.960	22.65	131.2	2.24	5.20	5.49	.29
52	8074	.958	22.27	130.8	2.20	5.15	5.39	.24
53	8074	.960	19.99	130.6	2.46	4.59	4.45	-.14
54	8074	.959	18.54	130.6	2.83	3.58	3.73	.15
55	8074	.959	16.94	130.3	3.06	2.96	3.05	.09
56	8102	.811	19.42	119.7	2.32	4.64	4.67	.03
57	8102	.812	19.34	120.7	2.53	4.82	4.50	-.32
58	8102	.826	19.31	122.0	2.67	4.68	4.37	-.31
59	8102	.813	19.42	123.1	2.85	4.65	4.29	-.36
60	8102	.811	19.36	124.3	3.11	4.56	4.10	-.46
61	8102	.822	19.22	125.5	3.32	4.22	3.90	-.32
62	8102	.830	19.35	127.1	3.63	3.98	3.74	-.24
63	8102	.864	19.21	128.1	3.82	3.75	3.56	-.19
64	8102	.866	19.29	128.7	3.84	3.79	3.56	-.23
65	8103	.847	19.50	132.9	3.41	4.00	3.72	-.28
66	8103	.847	19.37	136.2	3.80	3.27	3.37	.10
67	8103	.844	19.26	137.4	4.01	3.07	3.19	.12
68	8103	.847	19.12	138.1	4.20	2.94	3.02	.08
69	8113	.678	19.11	125.2	3.93	3.21	3.21	.00
70	8113	.678	19.14	125.0	3.80	2.99	3.30	.31
71	8113	.678	19.09	123.9	3.38	3.34	3.52	.18
72	8114	.703	19.14	123.1	3.21	3.43	3.65	.22
73	8114	.694	20.12	123.9	3.29	3.65	3.96	.31
74	8114	.667	21.06	124.9	3.30	4.43	4.28	-.15
75	8114	.660	22.62	125.7	3.23	4.99	4.88	-.11
76	8114	.663	24.22	127.0	3.17	5.30	5.40	.10
77	8114	.664	25.71	128.1	3.02	5.95	5.58	-.37
78	8114	.669	27.22	128.4	2.95	6.04	5.77	-.27
79	8114	.672	28.65	128.5	2.80	5.80	6.00	.20
80	8141	.900	24.82	162.5	2.07	4.58	4.24	-.34
81	8141	.898	24.97	162.6	2.18	4.37	4.20	-.17
82	8142	.900	24.93	161.8	2.11	4.53	4.27	-.26
83	8142	.900	24.90	162.0	1.99	4.54	4.32	-.22
84	8142	.899	24.78	161.8	2.09	4.41	4.27	-.14
85	8143	.904	29.44	161.8	2.35	4.74	4.49	-0.25
86	8143	.903	28.97	161.9	2.32	4.75	4.46	-.29
87	8143	.901	28.48	162.0	2.31	4.74	4.43	-.31
88	8143	.901	26.00	161.9	2.20	4.55	4.30	-.25
89	8143	.896	24.29	161.4	2.17	4.47	4.21	-.26
90	8144	.892	19.70	161.7	3.76	2.40	2.28	-.12
91	8144	.893	20.25	161.7	3.66	2.39	2.47	.08
92	8145	.893	20.24	161.7	3.72	2.31	2.44	.13
93	8145	.893	20.35	161.7	3.59	2.44	2.53	.09
94	8145	.893	20.23	161.7	3.72	2.39	2.44	.05
95	8145	.893	20.43	161.7	3.67	2.37	2.51	.14

stage. Although the inlet stage is quite atypical (particularly because the brine flow enters from the side), a Δ' correlation was of interest: (1) to check the test and measurement methods based on the consistency of the Δ' values; (2) to determine if the correlation for the inlet stage was of the same form (but with different coefficients) as for the test stage, suggesting that equations of this form might be applicable to a wider class of stage designs; and (3) to obtain experimental data which later could be verified in the hybrid computer stage dynamics model.[3]

The resulting inlet stage Δ' data and correlation indicate that the data are indeed consistent and that the form of the equation is similar to the test stage correlation. The ranges of operating conditions are shown in Table 3.

These test conditions are about the same as those for the test stage study (Table 1) except for a narrower range of flashdowns and a wider range of brine levels.

The same techniques and disclaimers as for the test stage also apply here. The resulting correlation, which fit the measured inlet stage Δ' data to within 0.2°F error, is

$$\Delta' \ (°F) \approx 1.46 + (0.30 - 0.0017 \ TBI1)(L_1 - 10) - 0.2 \ FD1 - 0.35 \ AC \qquad (2a)$$

for $L_1 \leq 30$ in.,

$$\Delta' \ (°F) \approx 1.46 + (0.30 - 0.0017 \ TBI1)(1.5 \ L_1 - 25) - 0.2 \ FD1 - 0.35 \ AC \qquad (2b)$$

for $L_1 \geq 30$ in.,

where

TBI1 = inlet stage tray brine inlet temperature, °F,

L_1 = inlet stage tray brine level, in.,

FD1 = inlet stage flashdown, °F,

AC = 1.0 if the loop contains acid and zero if it does not.

Table 3. Ranges of Inlet Stage Operating Conditions

Brine Flow Rate (lb/hr per ft width)	Temperature (°F)	Flashdown (°F)	Brine Level (in.)	Measured Δ' (°F)
$0.7 - 1.0 \times 10^6$	125 - 160	1.7 - 3.1	16 - 37	1.0 - 3.4

As before, the results of the trend and steady-state tests were generally in close agreement. Test conditions, with measured and calculated Δ' values, are given in Table 4.

Although the forms of the correlating equations for the inlet and test stages were similar, there were four significant differences in the results:

1. the values of inlet stage Δ' were generally much lower, ranging from 1.0 to 3.5°F (vs 2.5 to 6.5°F);
2. the reduced dependency of Δ' on level for brine depths greater than 24 in. observed for the test stage was not apparent for the inlet stage;
3. for brine depths greater than 30 in., the inlet stage Δ' showed an increased dependence on level (no data were recorded for test stage levels greater than 30 in.);
4. although there was an apparent increase in the test stage Δ' in run 8072 following addition of an antifoam agent, the corresponding Δ' measurements for the inlet stage showed no such effect.

6. RESULTS OF INTERSTAGE ORIFICE FLOW RATE CORRELATION TESTS

Probably the most crucial correlations required in calculating MSF dynamic behavior are those that describe interstage orifice flow rates. Early in the development of MSF plants, Silver[5] discussed stability and control and stated that the most difficult MSF control problem is to keep all the free brine levels at reasonable values, and "....the success or failure of a multistage flash distillation plant depends critically upon the design of the brine flow passages between stages." In a frequency response study of a model of large MSF plant designs, Ball noted the important effect of the orifice flow characteristics on overall plant stability.[6] Later investigations using a digital simulator showed that the predicted behavior is very sensitive to assumptions about the orifice behavior.[7] Van Winkle[8] recently pointed out the urgent need for good flow correlations. A theoretical and experimental investigation by MIT students[9] of single-phase hydraulics in an MSF mock-up stage noted the high sensitivity of

Table 4. Test Conditions for Inlet Stage Nonequilibrium Loss Runs - Comparison of Measured and Calculated Values[a]

						Δ′ (stage 1)		
Pt	Run	W	L1	TB11	FD1C	Expt'l	Calc	Error
1	8062	.969	26.60	141.1	1.75	1.99	2.11	.12
2	8062	.968	26.57	141.0	1.72	1.88	2.12	.24
3	8062	.967	26.83	141.0	1.70	1.98	2.13	.15
4	8062	.969	27.15	141.0	1.70	2.13	2.15	.02
5	8063	.972	27.02	141.1	1.75	2.06	2.13	.07
6	8063	.970	26.08	141.2	1.76	1.93	2.07	.14
7	8063	.967	25.52	141.1	1.67	2.03	2.06	.03
8	8063	.967	25.54	141.1	1.72	1.93	2.05	0.12
9	8063	.968	24.83	141.2	1.72	1.80	2.01	.21
10	8063	.950	22.69	141.4	1.68	1.82	1.88	.06
11	8063	.921	19.18	141.5	1.66	1.43	1.67	.24
12	8063	.936	19.49	141.5	1.70	1.55	1.68	.13
13	8063	.943	18.02	141.6	1.76	1.48	1.58	.10
14	8063	.944	17.64	141.5	1.75	1.29	1.56	.27
15	8064	.974	27.93	143.0	1.91	2.05	2.10	.05
16	8064	.974	27.41	145.3	2.04	1.71	1.97	.26
17	8072	.966	27.83	147.2	2.97	1.59	1.75	.16
18	8072	.962	26.03	147.2	3.03	1.84	1.65	-.19
19	8072	.964	26.12	146.8	2.95	1.58	1.68	.10
20	8072	.965	26.21	147.3	3.03	1.62	1.66	.04
21	8072	.962	25.99	147.5	3.09	1.61	1.63	.02
22	8072	.964	25.71	147.3	3.11	1.45	1.62	.17
23	8072	.964	24.70	147.3	3.01	1.48	1.59	.11
24	8072	.962	24.31	147.8	3.12	1.39	1.53	.14
25	8072	.961	24.32	147.7	3.12	1.40	1.54	.14
26	8072	.962	24.40	147.7	3.11	1.35	1.54	.19
27	8072	.962	22.72	147.4	3.07	1.14	1.47	.33
28	8073	.958	22.05	147.8	3.12	1.19	1.42	.23
29	8073	.958	23.33	146.4	2.94	1.37	1.55	.18
30	8073	.960	23.74	145.9	2.95	1.35	1.58	.23
31	8073	.961	23.41	145.8	2.86	1.61	1.59	-.02
32	8073	.961	24.33	144.4	2.68	1.74	1.71	-.03
33	8073	.961	24.64	144.1	2.81	1.65	1.70	.05
34	8073	.960	24.98	143.2	2.78	1.68	1.75	.07
35	8073	.958	24.63	142.9	2.78	1.61	1.74	.13
36	8073	.958	24.94	142.2	2.65	1.65	1.80	.15
37	8073	.959	25.11	140.9	2.55	1.81	1.86	.05
38	8073	.961	25.91	140.1	2.51	1.85	1.94	.09
39	8073	.959	25.79	139.2	2.42	1.62	1.98	.36
40	8073	.958	25.90	138.5	2.35	1.93	2.02	.09
41	8073	.956	25.96	137.8	2.33	1.81	2.04	.23
42	8073	.957	26.20	136.8	2.28	1.81	2.10	.29
43	8073	.958	26.55	135.4	2.19	1.95	2.18	.23
44	8073	.960	27.07	134.3	2.09	2.00	2.27	.27
45	8073	.960	27.24	133.8	2.07	2.20	2.30	.10
46	8073	.960	27.29	132.9	1.99	2.15	2.34	.19
47	8073	.963	27.67	132.6	2.03	2.14	2.37	.23

Table 4. Test Conditions for Inlet Stage Nonequilibrium Loss Runs - Comparison of Measured and Calculated Values (continued)[a]

						Δ′ (stage 1)		
Pt	Run	W	L1	TBI1	FD1C	Expt'l	Calc	Error
48	8074	.972	37.39	132.8	1.70	3.73	3.43	-.30
49	8074	.970	36.79	132.9	1.71	3.60	3.35	-0.25
50	8074	.966	34.42	133.2	1.76	3.29	3.07	-.22
51	8074	.960	29.77	133.1	1.92	2.50	2.53	.03
52	8074	.958	28.92	132.8	1.97	2.31	2.47	.16
53	8074	.960	25.97	132.6	2.03	2.23	2.25	.02
54	8074	.959	22.55	132.7	2.09	1.79	1.98	.19
55	8074	.959	16.73	132.4	2.11	1.37	1.54	.17
56	8102	.811	22.12	121.9	2.21	2.51	2.14	-.37
57	8102	.812	21.76	123.0	2.28	2.60	2.07	-.53
58	8102	.826	21.68	124.4	2.39	2.46	2.02	-.44
59	8102	.813	20.90	125.7	2.56	2.32	1.89	-.43
60	8102	.811	20.10	126.9	2.61	2.25	1.79	-.46
61	8102	.822	19.41	128.2	2.74	1.93	1.68	-0.25
62	8102	.830	17.25	130.0	2.95	1.75	1.44	-.31
63	8102	.864	16.06	130.9	2.83	1.59	1.36	-.23
64	8102	.866	15.89	131.5	2.85	1.64	1.34	-.30
65	8103	.847	20.38	135.5	2.63	1.92	1.66	-.26
66	8103	.847	16.53	139.0	2.84	1.36	1.31	-.05
67	8103	.844	15.44	140.2	2.84	1.20	1.23	.03
68	8103	.847	15.40	140.9	2.85	1.28	1.22	-.06
69	8113	.678	20.66	128.0	2.78	1.79	1.43	-.36
70	8113	.678	21.45	127.7	2.72	1.58	1.52	-.06
71	8113	.678	22.27	126.5	2.61	1.66	1.63	-.03
72	8114	.703	20.91	125.7	2.56	1.45	1.54	.09
73	8114	.694	22.52	126.4	2.52	1.76	1.67	-.09
74	8114	.667	23.35	127.7	2.81	1.96	1.65	-.31
75	8114	.660	24.97	128.7	2.99	1.84	1.73	-.11
76	8114	.663	26.45	130.2	3.16	1.75	1.77	.02
77	8114	.664	27.90	131.3	3.18	1.84	1.85	.01
78	8114	.669	29.18	131.5	3.11	2.02	1.95	-.07
79	8114	.672	31.01	131.6	3.09	1.84	2.13	.29
80	8141	.900	28.40	165.0	2.48	1.19	.97	-.22
81	8141	.898	26.93	165.1	2.55	.93	.93	-.00
82	8142	.900	28.40	164.3	2.47	1.14	1.00	-.14
83	8142	.900	28.02	164.5	2.52	1.14	.97	-.17
84	8142	.899	26.36	164.3	2.53	.99	.94	-.05
85	8143	.904	34.07	164.2	2.39	1.57	1.18	-.39
86	8143	.903	33.07	164.3	2.43	1.50	1.13	-.37
87	8143	.901	32.76	164.4	2.42	1.41	1.12	-.29
88	8143	.901	30.28	164.3	2.45	1.23	1.04	-.19
89	8143	.896	26.21	163.9	2.46	1.13	.96	-.17
90	8144	.892	28.24	164.2	2.46	1.02	1.00	-.02
91	8144	.893	28.70	164.2	2.47	.94	1.01	.07
92	8145	.893	28.71	164.1	2.43	1.01	1.02	.01
93	8145	.893	29.16	164.2	2.47	1.06	1.02	-.04
94	8145	.893	28.98	164.1	2.41	1.04	1.03	-.01
95	8145	.893	29.10	164.1	2.37	1.08	1.04	-.04

flow to effective contraction coefficient and energy loss variations, which made flow correlations difficult.

Previous attempts at obtaining orifice flow correlations from a considerable amount of flashing-flow operating data, obtained from tests both by ORNL and by BLH, resulted in several different expressions for flow which would typically fit the data to within 10% rms error. However, although these correlations predicted nominal flow rates fairly accurately for a given set of operating conditions they could not predict the effects on flow of trends in the various controlling parameters such as brine levels and vapor pressure drops.[10] It was postulated that by use of controlled trend tests the form of a good empirical equation could be derived from inspection of the results.

In the August 1970 test series, 17 orifice flow trend tests were run, with data scanned at 1-sec intervals using the ORNL logger. The ranges of operating conditions in these tests are shown in Table 5. Since this study did not cover the full ranges of these parameters, any flow calculations using the resulting correlation, even within these ranges, should be regarded as tentative, at best.

The empirical correlation equation derived for the inlet tray brine flow rate in the test stage accounts for most of the significant trends in the flow data. Data were taken during 10 trend tests in which the brine flow was maintained at a constant rate and other parameters (such as levels and flashdown) were varied. These data showed that as the upstream level was increased, the required total head increased markedly, and the relative effectiveness of the vapor pressure difference decreased. An empirical flow equation based on these data was constructed to fit the data from the 10 runs to within 2.7% rms error. Data from all 17 sets of flow tests, including those in which the recirculating flow rate was varied, were fitted to 3.2% rms error.

Table 5. Ranges of Operating Conditions for Orifice Flow Tests

Brine Flow Rate (lb/hr per ft width)	Temperature (°F)	ΔP_v (in. H_2O)	Orifice Height, (in.)	Inlet Stage Level (in.)	Test Stage Level (in.)
$0.7 - 1.0 \times 10^6$	125 - 165	4 - 19	6.3 - 9.5	14 - 33	16 - 27

The characteristics of the resulting equation for a particular orifice height (8.5 in.) and various flow and level conditions plotted in Fig. 8 show such significant features as large positive slopes of the total head vs upstream level; steeper slopes at higher flow rates; and at higher levels, an increased spread between the two curves for each set of flow and level conditions.

That the normal flow-stabilizing effect in open-channel flow, relating the flow and levels, was substantially altered is also shown in Fig. 8. For example, an increase in inlet flow rate to stage 1 makes its level L_1 increase; consequently the total head ΔP_T is increased and the flow rate out of stage 1 is increased accordingly. As the slopes of the total head vs L_1 curves become steeper, however, the increase in total head required to properly adjust the flow out of the stage becomes greater. Thus, steeper slopes indicate a greater destabilizing tendency in the inherent flow control mechanism, and the results show this tendency to be more prevalent at the higher flows.

The increased spread between the curves for ($L_2 - L_1 = 2$ in.) and ($L_2 - L_1 = -2$ in.) seen at higher brine levels represents a stabilizing effect on the inherent flow control. (This can be shown, with some effort, by postulating a starting set of operating conditions and then determining how much L_1 must change to cause a given change in flow, with L_2 and ΔP_v remaining constant. It turns out that the wider the spread of the ΔL curves, the less L_1 must change; hence, the more stable the stage hydraulics.)

Equation (2) shows that the inherent stability is reduced as the flow rate increases and the upstream level L_1 decreases. From Eq. (2), it also appears that the importance of the downstream level L_2 (relative to L_1 and ΔP_{vapor}) is quite high over much of the operating range, meaning that potentially serious overall plant stability problems would be likely.

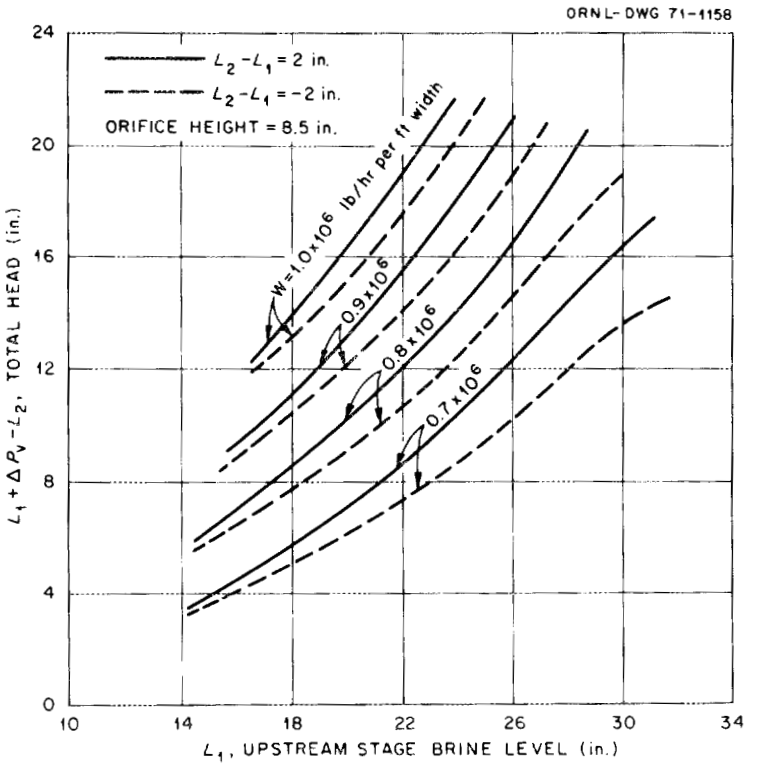

Fig. 8. Test Stage Inlet Orifice Flow Equation - Total Head vs Upstream Brine Level for Constant Flow and Level Difference.

The flow equation plotted in Fig. 8 is

$$W = \frac{0.165\,\text{ØH}\left(\dfrac{L_1 - L_2 + \Delta P_{VE}}{\text{ØH}} + 0.112\,\text{EDBL} + 1.22\right)}{2.64 + \text{EDBL}} \qquad (3)$$

where

W = brine specific flow rate, lb/hr per ft of width x 10^{-6},

ØH = orifice height, in.,

L_1 = upstream (midstage) brine level, in.,

L_2 = downstream (midstage) brine level, in.,

ΔP_{VE} = effective vapor pressure drop, in. H_2O,

$\Delta P_{VE} = [1 - 0.181\,(\text{DBL} - 1.22)]\,\Delta P_V$

ΔP_V = vapor pressure drop from stage 1 to 2, in. H_2O,

DBL = dimensionless upstream brine level equal to $L_1/\text{ØH}$,

EDBL = (DBL - 1) for DBL $\leq$ 3.47 and 2.47 for DBL > 3.47.

The correlation equation was derived mainly through use of a time-shared computer program which permitted rapid feedback of fit information, followed by a more detailed parameter gradient search routine on the ORNL IBM 360/91. The form of the equation is different from the usual versions of the classical orifice equation, where flow varies as some power (~0.5) of pressure drop.

Data used in the correlation, along with calculated flow values, are shown in Table 6. These data were extracted from runs in which many more points had been recorded and were selected because they covered the parameter ranges as evenly as possible. Figure 9 shows an example of such point selection; here the discharge coefficient C_d from a standard version of the classical orifice equation is plotted vs upstream level. Each point on the plot represents the average of 20 complete scans of data. Due to the very large number of raw data points involved, a complete set of all data is not included here.

7. EFFECTS OF ANTIFOAM AND ACID ADDITIONS AND CONDENSER BUNDLE VENTING RATE CHANGES

7.1 Antifoam Effects

Experiments were run on five different days to determine the effect of the addition of antifoam agents on Δ'. Preliminary calculations had indicated that the concentration of antifoam following a slug addition would become uniform throughout the loop within 10 min. The experimental data, however, clearly indicate a settling time of 60 to 90 min. Figure 10, which shows the error in the Δ' correlation vs time following two slug additions of antifoam, indicates clearly that transient increases in antifoam concentration increased the measured values of Δ'. Long-term effects on Δ' of varying degrees of antifoam concentration, however, were not discernible.

7.2 Acid Effects

The addition of a gallon or more of concentrated sulfuric acid after several days of high pH (~10.7) operation had a dramatic effect on plant operation (e.g.,

Table 6. Test Conditions for Orifice Flow Trend Tests - Comparison of Measured and Calculated Flow (Eq. 3) [a]

Pt	Run	L1	L2	ΔP_v	OH	TB12	W Expt'l	W Calc	W Error (%)
1	12003	16.00	19.87	9.37	8.81	132.8	0.805	0.764	-5.11
2	12003	18.03	19.67	8.84	8.81	132.8	0.826	0.789	-4.50
3	12003	20.23	19.57	8.62	8.81	132.8	0.832	0.822	-1.22
4	12003	23.89	19.51	8.11	8.81	132.7	0.880	0.863	-1.99
5	12003	28.44	20.37	6.97	8.81	133.6	0.931	0.865	-7.04
6	12003	32.28	21.01	6.22	8.81	133.9	0.982	0.906	-7.77
7	12005	30.60	20.53	6.12	9.51	136.6	1.040	0.951	-8.51
8	12005	29.37	20.56	6.89	9.51	136.3	0.994	0.951	-4.34
9	12005	27.00	20.92	7.44	9.51	135.4	0.946	0.918	-2.92
10	12005	23.87	19.93	6.09	9.50	129.8	0.854	0.866	1.38
11	12005	22.44	19.85	5.47	9.50	125.6	0.787	0.822	4.47
12	12006	23.16	20.18	4.96	9.50	123.2	0.788	0.807	2.47
13	12006	20.49	20.12	7.32	9.50	126.6	0.785	0.835	6.42
14	12006	17.97	19.97	7.85	9.50	128.1	0.787	0.811	3.09
15	12006	15.75	19.90	8.45	9.50	129.1	0.785	0.792	0.92
16	12006	14.25	20.10	8.97	9.50	129.4	0.786	0.772	-1.73
17	13011	22.50	17.75	3.96	8.50	130.3	0.769	0.756	-1.75
18	13011	24.56	18.81	5.18	8.50	131.9	0.768	0.786	2.34
19	13011	27.50	20.44	5.99	8.50	133.7	0.773	0.794	2.72
20	13011	30.83	22.60	5.36	8.50	134.5	0.773	0.780	0.86
21	13011	33.85	27.01	7.66	8.50	139.9	0.776	0.760	-2.05
22	13012	33.59	27.09	8.20	8.50	139.9	0.776	0.759	-2.15
23	13012	32.62	26.75	9.81	8.50	141.9	0.775	0.772	-0.41
24	13012	30.86	26.30	12.24	8.50	137.4	0.773	0.786	1.69
25	13012	29.42	25.88	13.04	8.54	137.1	0.773	0.786	1.74
26	13013	29.90	26.09	13.33	8.50	137.4	0.775	0.791	2.05
27	13013	26.10	23.75	12.23	8.50	137.0	0.771	0.803	4.16
28	13013	23.08	23.15	11.65	8.50	137.0	0.769	0.777	1.03
29	13013	19.10	20.49	9.75	8.50	132.9	0.769	0.769	-0.02
30	13013	16.48	20.75	10.88	8.50	134.5	0.770	0.759	-1.48
31	13013	14.21	19.34	9.91	8.50	132.2	0.768	0.744	-3.12
32	13015	22.30	21.95	9.77	8.48	132.3	0.764	0.757	-0.96
33	13015	24.31	22.15	9.36	8.48	132.6	0.765	0.766	0.16
34	13015	25.96	22.35	9.61	8.48	133.2	0.767	0.787	2.57
35	13015	27.57	22.68	9.71	8.48	133.5	0.766	0.797	4.05
36	13015	29.57	23.92	9.42	8.48	133.6	0.769	0.777	1.10
37	13015	30.76	24.58	8.66	8.48	134.1	0.770	0.773	0.34
38	13015	31.83	25.38	7.97	8.48	134.6	0.771	0.763	-1.07
39	13016	31.11	24.31	7.55	8.48	134.7	0.771	0.771	-0.06
40	13016	28.57	22.05	7.23	8.48	134.7	0.769	0.779	1.36
41	13016	25.03	20.28	6.62	8.48	134.4	0.766	0.775	1.15
42	13016	22.41	19.01	6.62	8.48	134.2	0.765	0.780	1.92
43	13016	19.18	17.60	6.56	8.48	133.8	0.762	0.778	2.14
44	13016	17.06	16.87	6.57	8.48	133.6	0.762	0.770	1.09
45	13016	15.51	16.34	6.69	8.48	133.5	0.762	0.768	0.83
46	13016	13.72	16.15	6.99	8.48	133.0	0.761	0.753	-1.04
47	13018	21.98	18.22	7.90	7.95	135.6	0.815	0.777	-4.66
48	13018	23.69	18.88	7.91	7.95	135.9	0.811	0.775	-4.38
49	13018	24.80	19.42	8.24	7.95	136.1	0.791	0.778	-1.64
50	13018	25.99	20.27	8.90	7.95	136.2	0.773	0.777	0.56
51	13018	27.96	22.31	9.62	7.95	136.2	0.747	0.753	0.82
52	13018	30.45	25.53	9.86	7.95	136.1	0.724	0.716	-1.16
53	13018	31.64	26.55	9.69	7.95	136.1	0.732	0.709	-3.10

Table 6. Test Conditions for Orifice Flow Trend Tests - Comparison of Measured and Calculated Flow (Eq. 3) (continued)[a]

Pt	Run	L1	L2	ΔP_v	OH	TBI2	W Expt'l	W Calc	W Error (%)
54	13019	30.80	26.29	9.60	7.95	135.9	0.721	0.696	-3.52
55	13019	28.00	23.23	9.84	7.95	136.0	0.720	0.729	1.24
56	13019	24.49	21.10	9.73	7.95	136.4	0.719	0.751	4.43
57	13019	22.32	20.52	9.22	7.95	136.4	0.715	0.732	2.44
58	13019	18.30	19.40	9.45	7.95	136.2	0.714	0.727	1.83
59	13019	15.35	19.70	9.92	7.95	136.1	0.713	0.685	-3.92
60	13028	30.38	19.13	6.50	7.95	136.6	0.889	0.861	-3.15
61	13028	30.38	19.88	7.20	7.95	136.3	0.861	0.849	-1.40
62	13028	30.79	20.52	7.74	7.95	136.6	0.845	0.848	0.38
63	13028	30.71	20.59	7.92	7.95	136.6	0.832	0.847	1.79
64	13028	28.98	20.33	8.49	7.95	137.0	0.800	0.821	2.60
65	13028	27.09	20.33	8.90	7.95	137.2	0.775	0.787	1.57
66	13028	21.87	20.39	9.30	7.95	137.2	0.732	0.733	0.20
67	13028	20.19	19.39	9.46	7.95	137.3	0.723	0.754	4.26
68	13030	27.47	19.32	6.23	8.45	133.5	0.858	0.830	-3.24
69	13030	25.42	18.96	7.60	8.45	142.0	0.866	0.847	-2.24
70	13030	24.13	19.81	9.05	8.45	147.5	0.859	0.836	-2.62
71	13030	21.74	19.15	10.17	8.45	149.7	0.856	0.864	0.95
72	13030	19.85	19.81	11.23	8.45	151.8	0.858	0.850	-0.92
73	13030	18.23	19.74	11.51	8.48	152.5	0.857	0.848	-1.04
74	13030	15.61	19.56	12.03	8.48	153.2	0.855	0.845	-1.15
75	13032	32.50	19.25	12.66	6.99	164.3	0.858	0.916	6.77
76	13032	29.87	20.23	14.34	6.99	164.7	0.822	0.854	3.88
77	13032	28.07	19.19	14.31	6.99	164.8	0.820	0.852	3.88
78	13032	24.70	19.90	15.49	6.99	165.0	0.791	0.786	-0.63
79	13032	22.52	19.03	15.51	6.99	165.2	0.787	0.804	2.14
80	13034	31.10	19.73	15.12	6.27	165.4	0.789	0.821	4.03
81	13034	29.13	20.23	16.17	6.27	165.8	0.762	0.784	2.82
82	13034	24.73	20.13	17.02	6.27	166.2	0.738	0.730	-1.14
83	13034	21.54	19.79	17.43	6.27	166.6	0.729	0.702	-3.66
84	13034	19.93	19.12	17.40	6.27	166.8	0.727	0.728	0.16
85	13034	17.83	19.76	17.48	6.27	167.2	0.703	0.714	1.63
86	13034	16.51	19.68	17.83	6.27	167.1	0.705	0.732	3.80
87	14010	28.54	20.75	4.83	9.68	146.5	0.923	0.902	-2.29
88	14010	26.63	20.79	6.83	9.69	147.4	0.918	0.922	0.41
89	14010	24.31	20.84	8.71	9.68	149.3	0.917	0.937	2.18
90	14010	23.48	20.53	9.56	9.69	150.5	0.916	0.965	5.33
91	14010	22.10	21.09	11.06	9.68	152.6	0.917	0.972	5.96
92	14010	19.62	20.79	11.53	9.70	153.4	0.915	0.971	6.16
93	14028	17.23	22.63	18.30	7.48	163.1	0.883	0.820	-7.15
94	14028	20.45	22.24	18.58	7.48	162.9	0.880	0.843	-4.26
95	14028	22.87	21.64	18.29	7.48	162.8	0.883	0.855	-3.20
96	14028	24.87	21.75	18.35	7.48	162.9	0.884	0.851	-3.74
97	14028	27.61	21.88	17.82	7.48	163.0	0.885	0.866	-2.16
98	14028	29.91	22.66	18.04	7.48	163.2	0.885	0.884	-0.09
99	14028	32.72	24.58	18.15	7.48	163.0	0.890	0.873	-1.95
100	14028	35.01	27.10	17.41	7.48	162.7	0.887	0.823	-7.22
101	14029	28.99	21.06	16.75	7.48	162.6	0.910	0.898	-1.30
102	14029	28.42	20.55	16.80	7.48	162.8	0.884	0.905	2.36
103	14029	27.05	21.06	17.60	7.48	163.0	0.883	0.878	-0.53
104	14029	24.83	20.86	18.42	7.48	163.0	0.884	0.881	-0.29
105	14029	23.49	20.89	18.54	7.48	163.1	0.882	0.885	0.37
106	14029	21.65	20.90	18.60	7.48	163.0	0.881	0.890	1.02

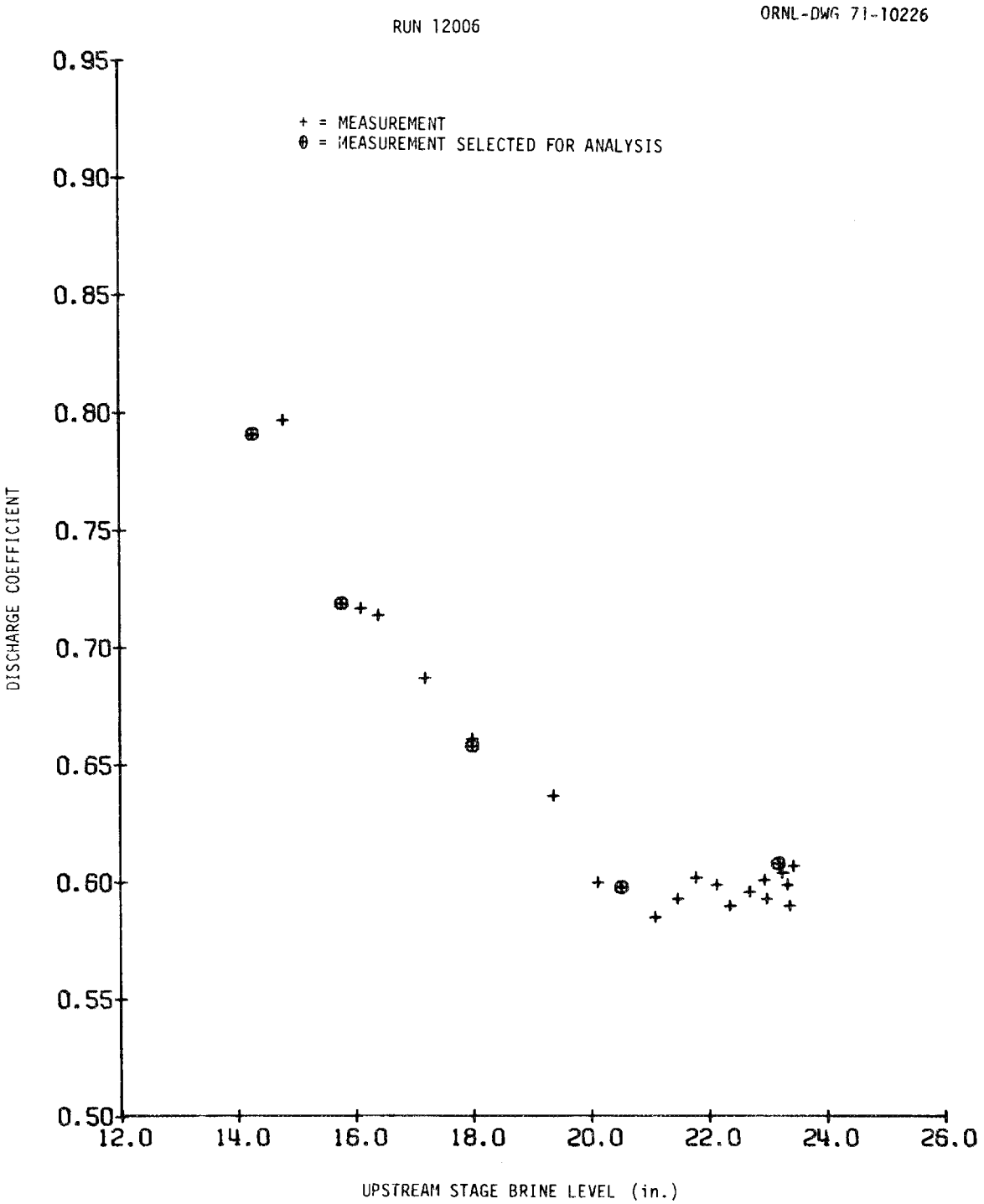

Fig. 9. Discharge Coefficient vs Upstream Stage Brine Level Showing Example of Data Point Selection.

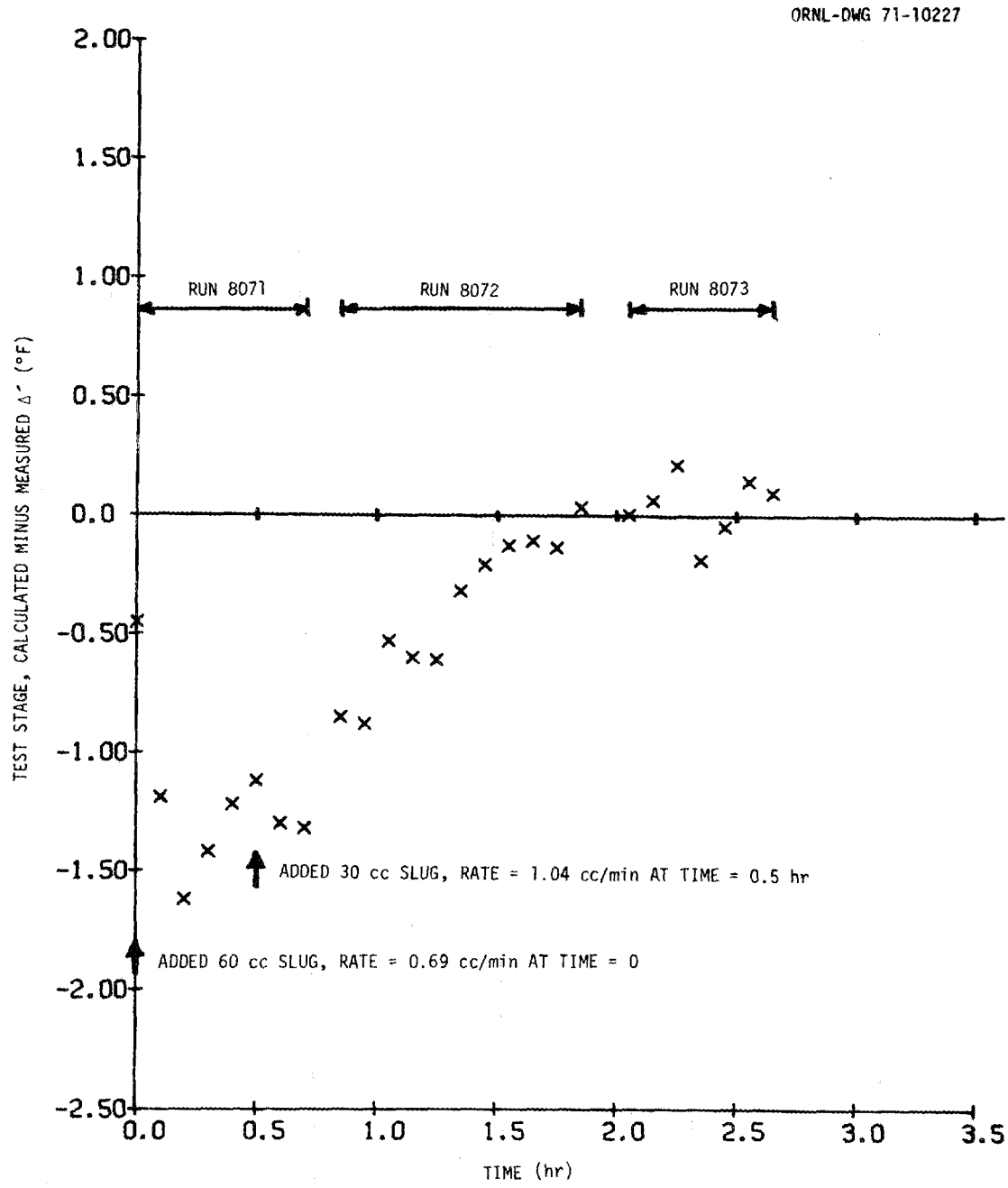

Fig. 10. Effects of Antifoam Additions on Test Stage Δ′ Correlation Errors.

once it caused a blowthrough between stages 1 and 2) and played havoc with the Δ' correlations. After the pH had settled down (at ~6.5), however, the effects on Δ' appeared to be consistent. The long-term effect on Δ' is possibly due to the acid increasing the boiling point elevation (BPE) of the brine.

7.3 Condenser Bundle Venting Rate Effects

Although there was evidence that in some cases increasing the venting rate tended to decrease the Δ', the tests were inconclusive because of the way the venting rate affected flashdown and the strong influence of flashdown on Δ'.

The notably poor overall heat transfer coefficients $\overline{U}$ obtained for the stage 2 condenser bundle were also of concern. After the first series of flashing runs, we noted that there was a distinct difference between the performance of the upper and lower two sets of tube bundles. The upper bundles were much more efficient than the lower ones, with values of the condensing coefficient (including all fouling) 50 to 300% greater. Since the coefficients for the upper bundles were usually fairly high (between 700 and 1000 Btu hr^{-1} ft^{-2} $°F^{-1}$), and the upper bundles were physically closer to the stage, we assumed that any noncondensable blanketing of the lower bundles would probably not affect the internal performance (i.e., Δ') of the stage itself.

8. DISCUSSION OF RESULTS

8.1 Combined Effects of Nonequilibrium Loss and Orifice Flow Behavior on Stage Operating Characteristics

As noted previously, the particular stage design tested (i.e., 7-ft long with a plain, rectangular orifice and no flash enhancers) had poor efficiency characteristics. Besides their influence in reducing efficiency, the high values of Δ' observed can also be related to a detrimental effect on the hydraulic behavior. For example, as a stage level decreased, its Δ' decreased. A smaller Δ' value indicates that the vapor temperature is closer to the mean brine temperature (i.e., hotter), and the corresponding vapor pressure is higher. This is in opposition to the inherent inventory control mechanism

in open-channel flow, where a decrease in inventory (brine level) decreases the static head in the stage and thus increases the inlet flow and decreases the outlet flow. Hence, a positive dependence of Δ' on level has a destabilizing tendency which indicates that flash enhancer and baffle designs that minimize this dependence would help to improve the hydraulic stability. Tests run later by BLH on the 7-ft stage with several different flash enhancer devices indicated just such desirable reductions in the dependence of Δ' on level. A comparison of measured Δ' values and those computed with the empty-stage correlation equation showed little improvement in Δ' values at low brine levels but significant improvements at higher levels.

In a study of single-phase MSF stage hydraulic stability, Wichner[11] calculated criteria for stability based on hydraulic considerations alone. He concluded that in the BLH flashing flow tests the stage levels were more unstable than expected based on his criteria. A possible explanation is the destabilizing effect of the positive dependence of Δ' on level. He also observed an inherent stabilizing effect of baffles on the single-phase hydraulics. Hence, baffles and other flash enhancer devices that reduce Δ' would tend to be doubly effective in improving stage stability.

8.2 Variations in Overall Test Stage Efficiency

Nonequilibrium loss is but one of several factors that contribute to loss of efficiency of stage operation. Other factors, such as BPE, condenser tube fouling, or vapor leakage due to blow-by or blow-through, are also important; like Δ', these factors also can be affected by operating conditions. In the design of an economically optimized desalting plant, one should consider the variations in efficiency that would be caused by expected variations in operating conditions. For example, a plant design with stage efficiencies that are very sensitive to small perturbations in operating parameters may be less desirable than one with a lower peak efficiency but with less sensitivity to parameter changes. Thus, experimental data showing trends in some overall measure of stage efficiency, as well as Δ', would be of interest. As an example, Fig. 11 shows a plot of the test stage cooling effectiveness as a function of brine level for two different tests. The cooling effectiveness ε_c is defined as the ratio of the actual

cooling (ΔT) of the tray brine to the ideal cooling ΔT (i.e., where the brine is cooled to the temperature of the inlet coolant T_{Ci}):

$$\epsilon_c = \frac{T_{Bi} - T_{Bo}}{T_{Bi} - T_{Ci}} . \tag{3}$$

Figure 11 shows that a decrease in tray brine level of about 10 in. increased the cooling effectiveness by about 50% in one run (8074) and 25% in the other (8114). In run 8074, the level decrease was accompanied by an increase in flashdown of about 1°F, but the flashdown remained fairly constant in run 8114.

8.3 Comparison of Nonequilibrium Loss and Orifice Flow Data with Current Design Correlations

A general, though perhaps oversimplified, statement of the philosophy used in development of the currently-used design correlations is that these correlations were derived for predicting evaporator behavior at specified reference design conditions. Although these correlations may be satisfactory for design point calculations, they do not predict accurately the stage performance as the operating conditions in the evaporator are changed. This point is substantiated by the results of a Δ' trend test and an orifice flow trend test.

Figure 12 shows measured Δ' test stage flashdown in run 8073, along with Δ' as predicted by the current OSW design equation (Sect. 10.2) and the equation derived from the present trend tests. (The points shown are the averages of eight scans rather than four to reduce clutter.) This figure illustrates clearly how the design equation, which does not include a dependence on flashdown, fails to predict the trend. Table 7 shows the results of all 95 Δ' points as calculated by the OSW design equation. The rms error of the predicted values was 0.58°F; the average predicted value was 0.3°F low.

As discussed in Sect. 6, the total head required for a given flow rate varies considerably with brine level. The current orifice flow design equation (Sect. 10.2) includes this effect only through the velocity-of-approach factor, which does not

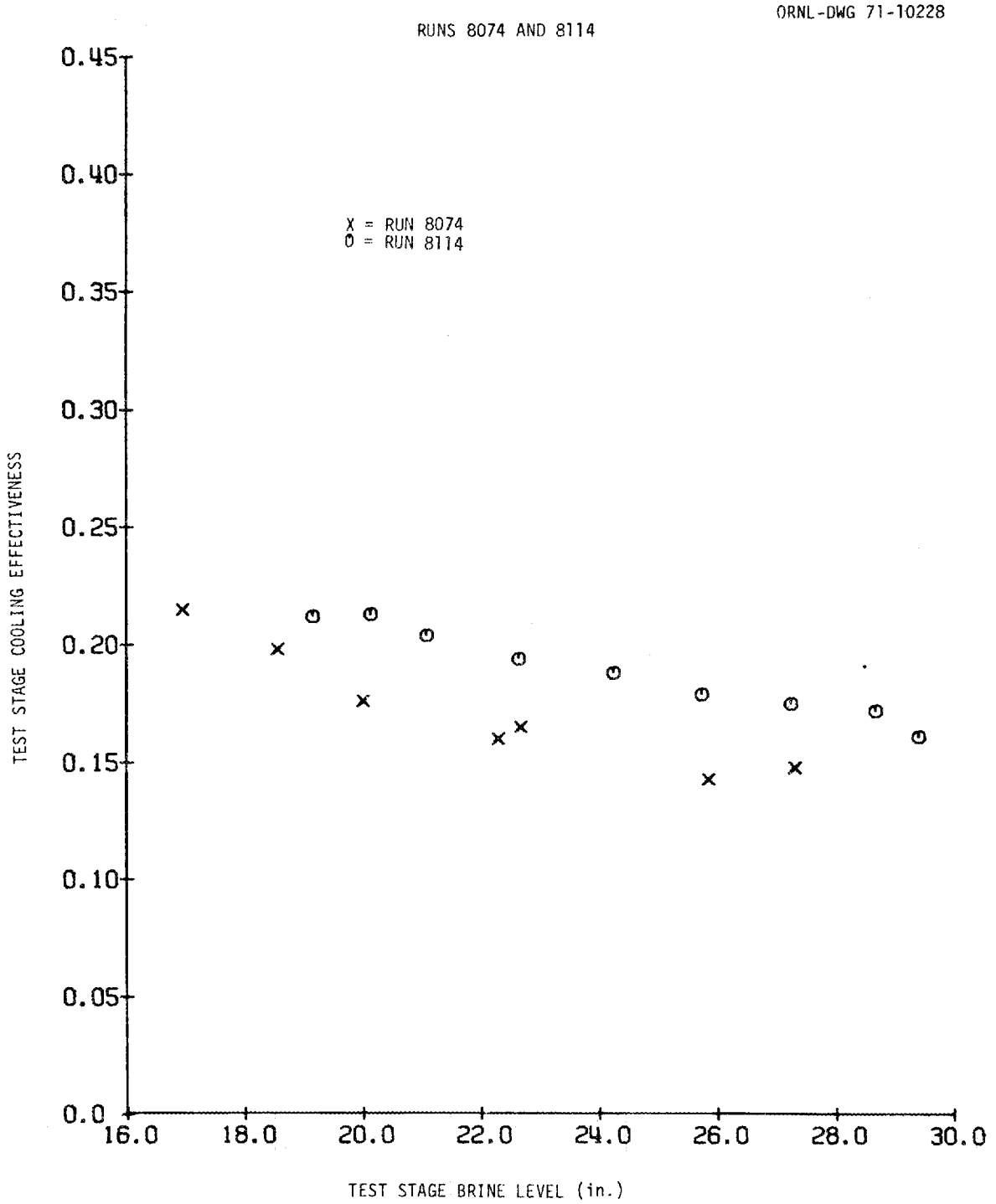

Fig. 11. Test Stage Overall Cooling Effectiveness vs Tray Brine Level.

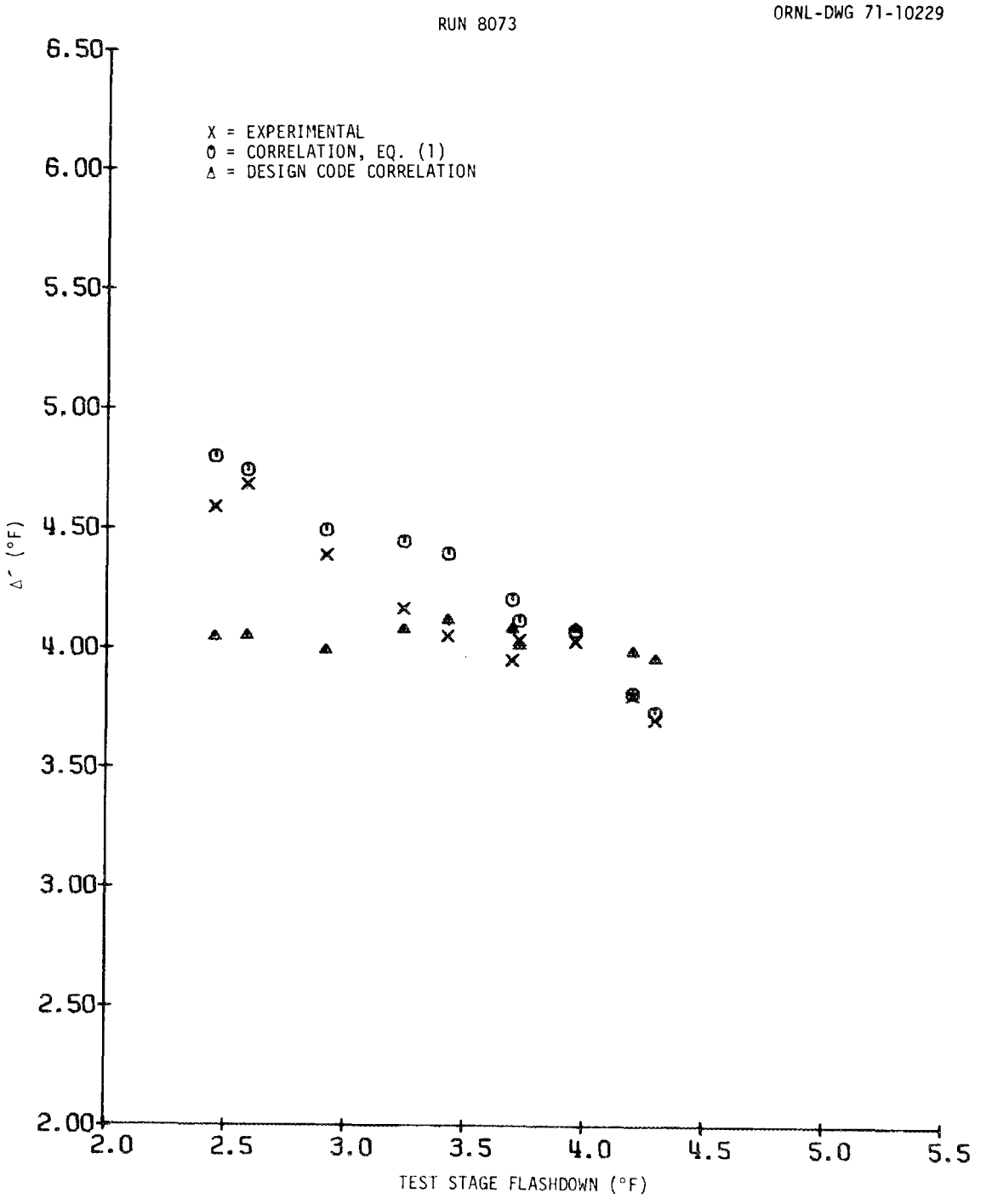

Fig. 12. Comparison of Measured and Calculated Values of Test Stage Δ' Showing Dependence of Δ' on Flashdown.

adequately account for the trend. This is shown in Fig. 13 as tray brine flow rate vs total head ($\Delta P_V + L_1 - L_e$) for trend run 13016. Figure 13 also shows the flows predicted by the design equation and the equation derived from the present tests. Table 8 gives the results of all orifice flow points as calculated by the design equation, for which there was an overall rms error of 10.7%. From a "steady-state design" point of view, the design equation is quite good, especially when one considers that this equation was derived from data on a 14-ft long (rather than the present 7-ft) stage, which would have significantly different hydraulic characteristics. However, from a dynamics, or plant operation, point of view, the design equation is inadequate.

The present tests and both design correlations described in this report pertain to plain, flat-bottom brine trays. These may be considered as basic cases with which the performance of various flash enhancer devices and baffles can be compared. In this respect, especially, interpretation of the data should not be based only on comparisons of reference design point performance. In addition to the basic problem of obtaining "equivalent" operating points for different cases, there is a necessity that each stage will be operated over a range of conditions. Hence, the respective correlation equations should be compared, such as those derived from the present trend tests, and both efficiency and operating performance should be considered.

9. CONCLUSIONS AND RECOMMENDATIONS

Test and analysis procedures were developed that improved quality of data and correlations. The controlled-trend tests enhanced the information output rate, provided readily discernible parametric relationships, and yielded reproducible results in the presence of inherent measurement problems such as nonuniform tray brine temperature and velocity profiles, brine temperature fluctuations, and RTD calibration shifts at higher operating temperatures. Data recorded with antifoam agents and acid in the system were internally consistent and the correlations were reproducible for nonequilibrium loss over a wide range of conditions. (A corollary observation is that if one does <u>not</u> consider such problems, the data are likely to be inconsistent and nonreproducible.)

Table 7. Test Conditions for Test Stage Nonequilibrium Loss Runs - Comparison of Measured Values with Design Equation Calculations[a]

						Δ′ (stage 2)		
Pt	Run	W	L2	TB12	FD2C	Expt'l	Calc	Error
1	8062	.969	20.86	139.4	2.13	4.34	3.62	-.72
2	8062	.968	20.39	139.3	2.18	4.33	3.52	-.81
3	8062	.967	20.40	139.3	2.15	4.45	3.51	-.94
4	8062	.969	20.70	139.3	2.13	4.64	3.58	-1.06
5	8063	.972	20.24	139.4	1.98	4.57	3.46	-1.11
6	8063	.970	20.12	139.4	2.08	4.33	3.44	-.89
7	8063	.967	19.91	139.4	2.26	4.18	3.41	-.77
8	8063	.967	19.91	139.4	2.29	4.09	3.42	-.67
9	8063	.968	19.54	139.5	2.35	3.80	3.34	-.46
10	8063	.950	19.01	139.7	2.55	3.55	3.22	-.33
11	8063	.921	17.92	139.8	2.71	2.86	2.98	0.12
12	8063	.936	17.64	139.8	2.66	2.98	2.94	-.04
13	8063	.943	17.31	139.8	2.59	2.85	2.89	.04
14	8063	.944	17.07	139.8	2.55	2.66	2.84	.18
15	8064	.974	21.28	141.1	1.93	5.20	3.63	-1.57
16	8064	.974	21.66	143.3	2.24	4.76	3.67	-1.09
17	8072	.966	26.36	144.2	3.36	5.86	5.06	-.80
18	8072	.962	24.50	144.2	3.92	5.43	4.54	-.89
19	8072	.964	24.44	143.9	3.81	5.15	4.53	-.62
20	8072	.965	24.50	144.3	3.83	5.19	4.53	-.66
21	8072	.962	24.26	144.4	3.85	5.16	4.46	-.70
22	8072	.964	24.13	144.2	3.93	4.83	4.44	-.39
23	8072	.964	23.20	144.3	4.13	4.35	4.21	-.14
24	8072	.962	23.04	144.7	4.23	4.15	4.16	.01
25	8072	.961	23.12	144.6	4.23	4.16	4.18	.02
26	8072	.962	23.02	144.6	4.20	4.18	4.15	-.03
27	8072	.962	22.15	144.3	4.27	3.71	3.95	.24
28	8073	.958	22.03	144.7	4.36	3.64	3.91	.27
29	8073	.958	22.27	143.5	4.23	3.77	4.01	.24
30	8073	.960	22.28	143.0	4.17	3.68	4.03	.35
31	8073	.961	21.90	142.9	4.23	3.93	3.95	.02
32	8073	.961	22.12	141.7	4.04	4.01	4.03	.02
33	8073	.961	22.58	141.3	3.88	4.06	4.15	.09
34	8073	.960	21.93	140.4	3.75	4.01	4.01	-.00
35	8073	.958	21.95	140.1	3.70	4.07	4.02	-.05
36	8073	.958	22.15	139.6	3.75	3.89	4.10	.21
37	8073	.959	21.88	138.4	3.64	4.02	4.07	.05
38	8073	.961	22.16	137.6	3.43	4.25	4.16	-.09
39	8073	.959	21.74	136.8	3.42	3.86	4.08	.22
40	8073	.958	21.72	136.2	3.29	4.13	4.09	-.04
41	8073	.956	21.61	135.5	3.19	4.21	4.07	-.14
42	8073	.957	21.28	134.5	3.03	4.33	4.02	-.31
43	8073	.958	20.93	133.2	2.80	4.45	3.96	-.49
44	8073	.960	21.14	132.2	2.66	4.62	4.05	-.57
45	8073	.960	21.13	131.7	2.51	4.75	4.05	-.70
46	8073	.960	20.88	130.9	2.48	4.61	4.02	-.59
47	8073	.963	21.04	130.6	2.42	4.57	4.07	-.50

Table 7. Test Conditions for Test Stage Nonequilibrium Loss Runs - Comparison of Measured Values with Design Equation Calculations (continued)[a]

						Δ′ (stage 2)		
Pt	Run	W	L2	TBI2	FD2C	Expt'l	Calc	Error
48	8074	.972	27.29	131.1	2.02	5.97	6.07	.10
49	8074	.970	27.28	131.2	2.02	5.91	6.05	.14
50	8074	.966	25.82	131.4	1.94	5.93	5.46	-.47
51	8074	.960	22.65	131.2	2.24	5.20	4.46	-.74
52	8074	.958	22.27	130.8	2.20	5.15	4.36	-.79
53	8074	.960	19.99	130.6	2.46	4.59	3.80	-.79
54	8074	.959	18.54	130.6	2.83	3.58	3.51	-.07
55	8074	.959	16.94	130.3	3.06	2.96	3.20	.24
56	8102	.811	19.42	119.7	2.32	4.64	3.86	-.78
57	8102	.812	19.34	120.7	2.53	4.82	3.83	-.99
58	8102	.826	19.31	122.0	2.67	4.68	3.81	-.87
59	8102	.813	19.42	123.1	2.85	4.65	3.79	-.86
60	8102	.811	19.36	124.3	3.11	4.56	3.75	-.81
61	8102	.822	19.22	125.5	3.32	4.22	3.71	-.51
62	8102	.830	19.35	127.1	3.63	3.98	3.72	-.26
63	8102	.864	19.21	128.1	3.82	3.75	3.72	-.03
64	8102	.866	19.29	128.7	3.84	3.79	3.72	-.07
65	8103	.847	19.50	132.9	3.41	4.00	3.53	-.47
66	8103	.847	19.37	136.2	3.80	3.27	3.42	.15
67	8103	.844	19.26	137.4	4.01	3.07	3.37	.30
68	8103	.847	19.12	138.1	4.20	2.94	3.34	.40
69	8113	.678	19.11	125.2	3.93	3.21	3.54	.33
70	8113	.678	19.14	125.0	3.80	2.99	3.54	.55
71	8113	.678	19.09	123.9	3.38	3.34	3.53	.19
72	8114	.703	19.14	123.1	3.21	3.43	3.59	.16
73	8114	.694	20.12	123.9	3.29	3.65	3.78	.13
74	8114	.667	21.06	124.9	3.30	4.43	3.92	-.51
75	8114	.660	22.62	125.7	3.23	4.99	4.27	-.72
76	8114	.663	24.22	127.0	3.17	5.30	4.66	-.64
77	8114	.664	25.71	128.1	3.02	5.95	5.05	-.90
78	8114	.669	27.22	128.4	2.95	6.04	5.55	-.49
79	8114	.672	28.65	128.5	2.80	5.80	6.08	.28
80	8141	.900	24.82	162.5	2.07	4.58	3.48	-1.10
81	8141	.898	24.97	162.6	2.18	4.37	3.53	-.84
82	8142	.900	24.93	161.8	2.11	4.53	3.54	-.99
83	8142	.900	24.90	162.0	1.99	4.54	3.51	-1.03
84	8142	.899	24.78	161.8	2.09	4.41	3.50	-.91
85	8143	.904	29.44	161.8	2.35	4.74	4.80	.06
86	8143	.903	28.97	161.9	2.32	4.75	4.64	-.11
87	8143	.901	28.48	162.0	2.31	4.74	4.48	-.26
88	8143	.901	26.00	161.9	2.20	4.55	3.81	-.74
89	8143	.896	24.29	161.4	2.17	4.47	3.42	-1.05
90	8144	.892	19.70	161.7	3.76	2.40	2.70	.30
91	8144	.893	20.25	161.7	3.66	2.39	2.78	.39
92	8145	.893	20.24	161.7	3.72	2.31	2.79	.48
93	8145	.893	20.35	161.7	3.59	2.44	2.79	.35
94	8145	.893	20.23	161.7	3.72	2.39	2.79	.40
95	8145	.893	20.43	161.7	3.67	2.37	2.82	.45

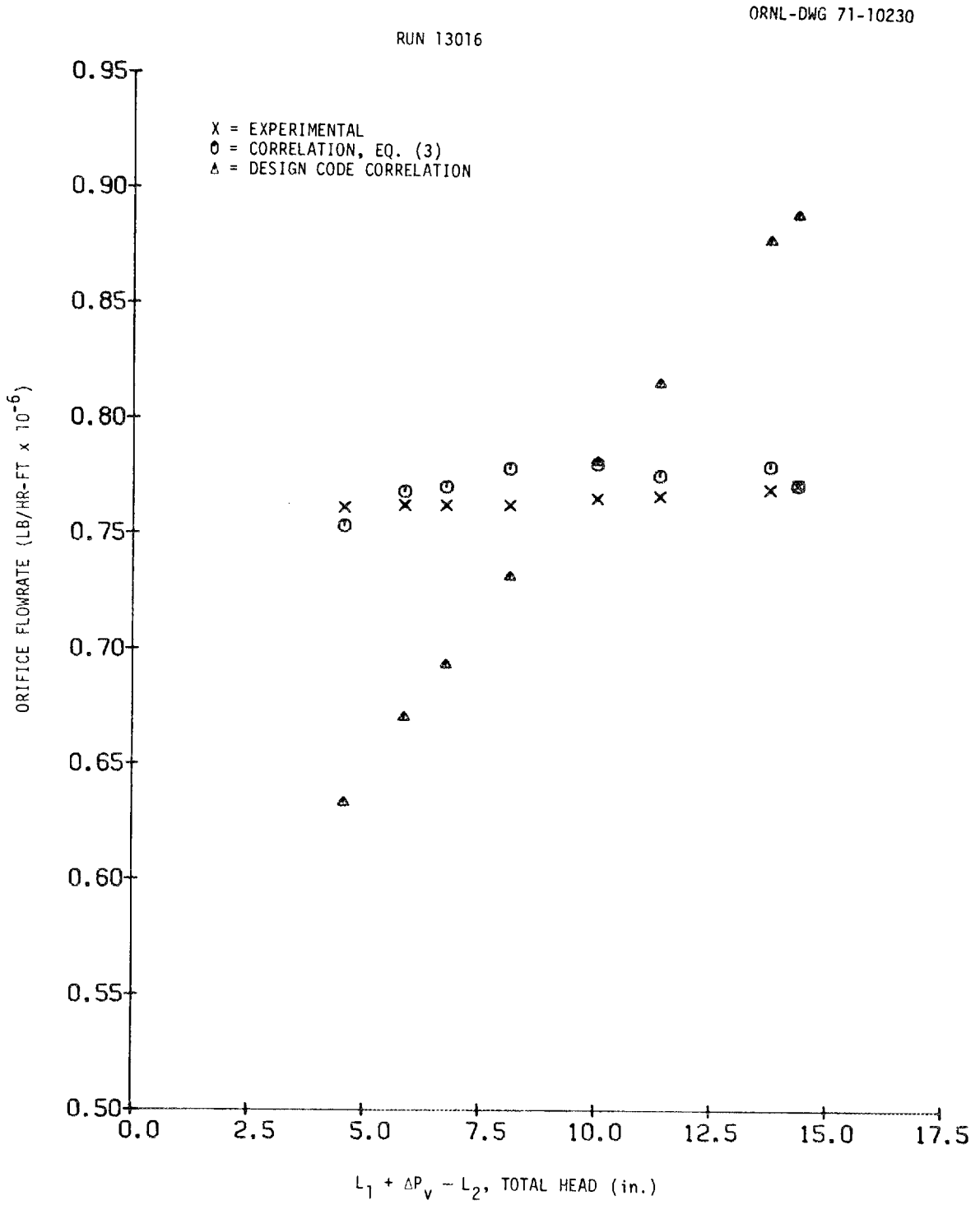

Fig. 13. Comparison of Measured and Calculated Values of Interstage Orifice Flowrate Showing Independence of Flow on Total Head.

An empirical correlation for interstage orifice flow was derived which accounted for most of the trends within limited operating parameter ranges. The combined effects of hydraulic and nonequilibrium loss were important to the operational stability of a single stage.

We recommend that trend test methods be developed further and applied to all stage designs tested at the Wrightsville Beach three-stage unit and the San Diego nine-stage MSF module. Correlations for stage nonequilibrium loss and hydraulic behavior should be obtained over the entire operating range of interest, and their effects both on single-stage and overall plant stability and efficiency should be evaluated.

Development of several improved measurement and data-acquisition capabilities is urgently needed. A more reliable measurement method for saturation temperature is required. Development of a reliable means for measuring tray brine temperature and velocity profiles is essential to a determination of nonequilibrium losses at the MSF module, because no method exists for measuring mean tray brine outlet temperatures from individual stages. The installation of an on-line computer at Wrightsville Beach should satisfy the data-acquisition needs of the three-stage plant; however, the data-acquisition capabilities at the San Diego module must be revamped to be suitable for the experiments recommended herein.

---

[a]Explanation of column headings in Tables 2, 4, 6, 7, and 8:

W	brine recirculation flow, lb/hr per ft of width x 10^{-6}
L1	stage 1 brine level, in.
L2	stage 2 brine level, in.
TBI1	stage 1 inlet tray brine temperature
TBI2	stage 2 inlet tray brine temperature
FD1C	flashdown of stage 1, computed from condenser heat balance
FD2C	flashdown of stage 2, computed from condenser heat balance
ΔP_v	vapor pressure drop from stage 1 to 2, in. H_2O
OH	height of orifice between stages 1 and 2, in.

Table 8. Test Conditions for Orifice Flow Trend Tests - Comparison of Measured Flow with Design Equation Calculations[a]

Pt	Run	L1	L2	ΔP_v	OH	TB12	W Expt'l	W Calc	W Error (%)
1	12003	16.00	19.67	9.37	8.81	132.8	0.805	0.679	-15.71
2	12003	18.03	19.67	8.84	8.81	132.8	0.826	0.737	-10.81
3	12003	20.23	19.57	8.62	8.81	132.8	0.832	0.804	-3.40
4	12003	23.89	19.51	8.11	8.81	132.7	0.880	0.894	1.55
5	12003	28.44	20.37	6.97	8.81	133.6	0.931	0.953	2.32
6	12003	32.28	21.01	6.22	8.81	133.9	0.982	1.009	2.80
7	12005	30.60	20.53	6.12	9.51	136.6	1.040	1.064	2.28
8	12005	29.37	20.56	6.89	9.51	136.3	0.994	1.053	5.97
9	12005	27.00	20.92	7.44	9.51	135.4	0.946	0.994	5.05
10	12005	23.87	19.93	6.09	9.50	129.8	0.854	0.883	3.34
11	12005	22.44	19.85	5.47	9.50	125.6	0.787	0.808	2.69
12	12006	23.16	20.18	4.96	9.50	123.2	0.788	0.798	1.24
13	12006	20.49	20.12	7.32	9.50	126.6	0.785	0.807	2.83
14	12006	17.97	19.97	7.85	9.50	128.1	0.787	0.741	-5.83
15	12006	15.75	19.90	8.45	9.50	129.1	0.785	0.682	-13.14
16	12006	14.25	20.10	8.97	9.50	129.4	0.786	0.627	-20.27
17	13011	22.50	17.75	3.96	8.50	130.3	0.769	0.734	-4.51
18	13011	24.56	18.81	5.18	8.50	131.9	0.768	0.805	4.76
19	13011	27.50	20.44	5.99	8.50	133.7	0.773	0.861	11.44
20	13011	30.83	22.60	5.36	8.50	134.5	0.773	0.869	12.42
21	13011	33.85	27.01	7.66	8.50	139.9	0.776	0.889	14.60
22	13012	33.59	27.09	8.20	8.50	139.9	0.776	0.895	15.38
23	13012	32.62	26.75	9.81	8.50	141.9	0.775	0.924	19.19
24	13012	30.86	26.30	12.24	8.50	137.4	0.773	0.957	23.79
25	13012	29.42	25.88	13.04	8.54	137.1	0.773	0.960	24.15
26	13013	29.90	26.09	13.33	8.50	137.4	0.775	0.968	24.91
27	13013	26.10	23.75	12.23	8.50	137.0	0.771	0.911	18.14
28	13013	23.08	23.15	11.65	8.50	137.0	0.769	0.833	8.30
29	13013	19.10	20.49	9.75	8.50	132.9	0.769	0.743	-3.38
30	13013	16.48	20.75	10.88	8.50	134.5	0.770	0.695	-9.72
31	13013	14.21	19.34	9.91	8.50	132.2	0.768	0.637	-17.00
32	13015	22.30	21.95	9.77	8.48	132.3	0.764	0.785	2.77
33	13015	24.31	22.15	9.36	8.48	132.6	0.765	0.823	7.57
34	13015	25.96	22.35	9.61	8.48	133.2	0.767	0.869	13.35
35	13015	27.57	22.68	9.71	8.48	133.5	0.766	0.904	18.01
36	13015	29.57	23.92	9.42	8.48	133.6	0.769	0.911	18.53
37	13015	30.76	24.58	8.66	8.48	134.1	0.770	0.902	17.19
38	13015	31.83	25.38	7.97	8.48	134.6	0.771	0.888	15.23
39	13016	31.11	24.31	7.55	8.48	134.7	0.771	0.888	15.16
40	13016	28.57	22.05	7.23	8.48	134.7	0.769	0.877	14.02
41	13016	25.03	20.28	6.62	8.48	134.4	0.766	0.815	6.41
42	13016	22.41	19.01	6.62	8.48	134.2	0.765	0.781	2.10
43	13016	19.18	17.60	6.56	8.48	133.8	0.762	0.731	-4.04
44	13016	17.06	16.87	6.57	8.48	133.6	0.762	0.693	-9.11
45	13016	15.51	16.34	6.69	8.48	133.5	0.762	0.670	-12.02
46	13016	13.72	16.15	6.99	8.48	133.0	0.761	0.633	-16.77
47	13018	21.98	18.22	7.90	7.95	135.6	0.815	0.779	-4.37
48	13018	23.69	18.88	7.91	7.95	135.9	0.811	0.803	-0.95
49	13018	24.80	19.42	8.24	7.95	136.1	0.791	0.825	4.24
50	13018	25.99	20.27	8.90	7.95	136.2	0.773	0.848	9.65
51	13018	27.96	22.31	9.62	7.95	136.2	0.747	0.859	15.00
52	13018	30.45	25.53	9.86	7.95	136.1	0.724	0.841	16.18
53	13018	31.64	26.55	9.69	7.95	136.1	0.732	0.839	14.63

Table 8. Test Conditions for Orifice Flow Trend Tests - Comparison of Measured Flow with Design Equation Calculations (continued)[a]

Pt	Run	L1	L2	ΔP_v	OH	TB12	W Expt'l	W Calc	W Error (%)
54	13019	30.80	26.29	9.60	7.95	135.9	0.721	0.823	14.14
55	13019	28.00	23.23	9.84	7.95	136.0	0.720	0.842	16.93
56	13019	24.49	21.10	9.73	7.95	136.4	0.719	0.812	12.89
57	13019	22.32	20.52	9.22	7.95	136.4	0.715	0.758	6.03
58	13019	18.30	19.40	9.45	7.95	136.2	0.714	0.691	-3.24
59	13019	15.35	19.70	9.92	7.95	136.1	0.713	0.602	-15.53
60	13028	30.38	19.13	6.50	7.95	136.6	0.889	0.914	2.85
61	13028	30.38	19.88	7.20	7.95	136.3	0.861	0.913	6.06
62	13028	30.79	20.52	7.74	7.95	136.6	0.845	0.920	8.83
63	13028	30.71	20.59	7.92	7.95	136.6	0.832	0.920	10.63
64	13028	28.98	20.33	8.49	7.95	137.0	0.800	0.903	12.87
65	13028	27.09	20.33	8.90	7.95	137.2	0.775	0.871	12.42
66	13028	21.87	20.39	9.30	7.95	137.2	0.732	0.753	2.81
67	13028	20.19	19.39	9.46	7.95	137.3	0.723	0.745	3.02
68	13030	27.47	19.32	6.23	8.45	133.5	0.858	0.895	4.27
69	13030	25.42	18.96	7.60	8.45	142.0	0.866	0.893	3.08
70	13030	24.13	19.81	9.05	8.45	147.5	0.859	0.878	2.20
71	13030	21.74	19.15	10.17	8.45	149.7	0.856	0.872	1.92
72	13030	19.85	19.81	11.23	8.45	151.8	0.858	0.838	-2.31
73	13030	18.23	19.74	11.51	8.48	152.5	0.857	0.813	-5.17
74	13030	15.61	19.56	12.03	8.48	153.2	0.855	0.774	-9.48
75	13032	32.50	19.25	12.66	6.99	164.3	0.858	0.945	10.11
76	13032	29.87	20.23	14.34	6.99	164.7	0.822	0.916	11.41
77	13032	28.07	19.19	14.31	6.99	164.8	0.820	0.905	10.38
78	13032	24.70	19.90	15.49	6.99	165.0	0.791	0.859	8.63
79	13032	22.52	19.03	15.51	6.99	165.2	0.787	0.841	6.83
80	13034	31.10	19.73	15.12	6.27	165.4	0.769	0.854	8.20
81	13034	29.13	20.23	16.17	6.27	165.8	0.762	0.835	9.56
82	13034	24.73	20.13	17.02	6.27	166.2	0.738	0.787	6.67
83	13034	21.54	19.79	17.43	6.27	166.6	0.729	0.753	3.30
84	13034	19.93	19.12	17.40	6.27	166.8	0.727	0.741	1.89
85	13034	17.83	19.76	17.48	6.27	167.2	0.703	0.698	-0.69
86	13034	16.51	19.68	17.83	6.27	167.1	0.705	0.687	-2.55
87	14010	28.54	20.75	4.83	9.68	146.5	0.923	0.976	5.72
88	14010	26.63	20.79	6.83	9.69	147.4	0.918	0.987	7.56
89	14010	24.31	20.84	8.71	9.68	149.3	0.917	0.982	7.14
90	14010	23.48	20.53	9.56	9.69	150.5	0.916	1.002	9.38
91	14010	22.10	21.09	11.06	9.68	152.6	0.917	0.997	8.67
92	14010	19.62	20.79	11.53	9.70	153.4	0.915	0.960	4.97
93	14028	17.23	22.63	18.30	7.48	163.1	0.883	0.792	-10.28
94	14028	20.45	22.24	18.58	7.48	162.9	0.880	0.867	-1.47
95	14028	22.87	21.64	18.29	7.48	162.8	0.883	0.916	3.71
96	14028	24.87	21.75	18.35	7.48	162.9	0.884	0.948	7.28
97	14028	27.61	21.88	17.82	7.48	163.0	0.885	0.981	10.82
98	14028	29.91	22.66	18.04	7.48	163.2	0.885	1.008	13.87
99	14028	32.72	24.58	18.15	7.48	163.0	0.890	1.021	14.68
100	14028	35.01	27.10	17.41	7.48	162.7	0.887	1.000	12.76
101	14029	28.99	21.06	16.75	7.48	162.6	0.910	0.999	9.73
102	14029	28.42	20.55	16.80	7.48	162.8	0.884	1.000	13.09
103	14029	27.05	21.06	17.60	7.48	163.0	0.883	0.983	11.33
104	14029	24.83	20.86	18.42	7.48	163.0	0.884	0.967	9.36
105	14029	23.49	20.89	18.54	7.48	163.1	0.882	0.947	7.36
106	14029	21.65	20.90	18.60	7.48	163.0	0.881	0.918	4.19

10. APPENDIX

10.1 Test Stage Distillate Rate Measurement

The distillate rate from the test stage was measured using the existing weigh tank by installing a d/p cell to measure liquid level and a valve in the drain line to vary the flow out of the tank. The flow out of the weigh tank for a given valve setting was dependent on the level of water in the tank, and the rate of change in the level of water was dependent on the difference between the flow into the tank and the flow out of the tank. To ensure that the flow into the weigh tank was equal to the amount of product being produced, the test stage distillate tank was equipped with a level controller.

10.1.1 Theory of Operation

The range of flow rate that could be measured using this technique depended on the valve setting and the height of the weigh tank. The following equation describes the flow out of the tank with no inflow:

$$W_o = C_k \sqrt{h} , \tag{4}$$

where

C_k = valve constant, dependent on valve position,

h = liquid height in weigh tank,

W_o = outflow.

The flow out of the tank with the same conditions can also be described by the following differential equation:

$$W_o = - \gamma A \frac{dh}{dt} , \tag{5}$$

where

γ = liquid density, lb/ft^3,

A = cross-sectional area of weigh tank, ft^2.

By equating Eqs. (4) and (5), the following differential equation is obtained:

$$\frac{dh}{\sqrt{h}} = -\frac{C_k}{\gamma A}\, dt. \tag{6}$$

By integrating and squaring Eq. (6), the equation for liquid height as a function of time is obtained:

$$h = h_o - \frac{C_k \sqrt{h_o}}{\gamma A}\, t + \left(\frac{C_k}{2\gamma A}\right)^2 t^2 \quad , \tag{7}$$

where h_o is the initial liquid height at $t = 0$. This demonstrates that liquid height vs time with outflow and no inflow is a quadratic function of time.

10.1.2 Calibration Technique

The outflow for any given valve setting was calibrated by filling the weigh tank and recording the liquid level at equal time intervals with a data logger as the tank drained. By a regression line analysis of the data the coefficients for the following equation were determined:

$$h(t) = a_0 + a_1 t + a_2 t^2 . \tag{8}$$

During the draining process, h(t) is monotonic; therefore, the value of h(t) uniquely determines the value of t. Solution of Eq. (8) for t yields:

$$t = \frac{1}{2a_2}\left(-a_1 + \sqrt{a_1^2 - 4(a_2)(a_0 - h)}\right) . \tag{9}$$

The outflow of the weight tank in terms of the regression coefficients is obtained from Eq. (5) and

$$\frac{dh}{dt} = a_1 + 2a_2 t \tag{10}$$

to obtain

$$W_o = A\gamma\,[a_1 + 2a_2 t] .$$

With the value of t determined from Eq. (9), the calibrated outflow from the weigh tank during drainage is

$$W_o = A\gamma \sqrt{a_1^2 - 4a_2 (a_o - h)} \ . \tag{11}$$

10.1.3 Determination of Distillate Flow Rate

During a run, the distillate flow rate was determined from

$$W_i = A\gamma \frac{dh}{dt} + A\gamma \sqrt{a_1^2 - 4a_2 (a_o - h)}, \tag{12}$$

where W_i is the distillate flow rate in lb/sec. The value of $\frac{dh}{dt}$ was determined from two successive readings of the weigh tank level, and the difference was divided by the time interval between the samples. For the installed tank, the value of $A\gamma$ was 172.3 lb/ft.

10.2 Currently Used Design Equations

The "current technology" Δ' or submergence equation[12] for unbaffled stages is

$$\text{SUBA} = 2.6743 \exp(-0.012216 t_B) \exp(0.07 * \text{depth}) \exp\left(0.476 \frac{\text{tray flow}}{10^3}\right)$$

$$\Delta' = \text{SUB} = \left(\frac{\rho}{2} + \text{SUBA}\right) \left(\frac{\text{SUBA}}{\rho/2 + \text{SUBA}}\right)^{L/10}$$

where

ρ = stage temperature decrement, °F,

L = stage length, ft,

t_B = brine temperature, °F,

depth = brine depth, in.,

tray flow = mass flow rate of brine, lb/hr-ft.

An empirical flow equation in common usage is one derived by AMF[13] for plain orifices:

$$\frac{W}{A} = 400{,}000 \left(\frac{\Delta P_T}{1.25}\right)^{0.455},$$

where

W = interstage flow rate, lb/hr,

A = interstage orifice area, ft^2,

A_1 = cross-sectional area of brine leaving upstream stage, ft^2,

$\Delta P_T = (\Delta P_V + \Delta h) / (1 - A^2/A_1^2)$, in. H_2O,

ΔP_V = interstage vapor pressure difference, in. H_2O,

Δh = interstage static liquid-level difference, in. H_2O.

11. REFERENCES

1. J. G. Delene and S. J. Ball, A Digital Computer Code for Simulating Large Multistage Flash Evaporator Desalting Plant Dynamics, ORNL-TM-2933 (to be published).

2. N. E. Clapp, Jr., S. J. Ball, and J. G. Delene, Dynamic Testing of the OSW Wrightsville Beach 3-Stage Flash Evaporator, August 1970, ORNL-TM-3418 (to be published).

3. N. E. Clapp, Jr., A Hybrid Computer Program for Flash Evaporator Model Parameter Optimization, ORNL-TM-3419 (to be published).

4. J. G. Delene, S. J. Ball, and N. E. Clapp, Jr., Blow-through Experiments on the OSW Wrightsville Beach 3-Stage Flash Evaporator, August 1970, ORNL-TM-3420 (to be published).

5. R. S. Silver, "Fresh Water from the Sea," Proc. Inst. Mech. Engr. 179(5), 135-54 (1964-65).

6. S. J. Ball, Nuclear Desalination Dual-Purpose Plant Control Studies Interim Report, Part I, ORNL-TM-1618 (October 1966).

7. J. G. Delene and S. J. Ball, "A Digital Simulation of the Dynamics of Large Multistage Flash Evaporator Plants," Proc. Summer Computer Simulation Conf., Denver, June 1970, pp. 347-52.

8. R. Van Winkle, Investigation of the Need for Variable Orifices in Multistage Flash Evaporators, ORNL-TM-2746 (November 1970).

9. J. D. Dearth, T. M. McAuley, and A. M. Sheikh, Single-Phase Flow Regimes in a Multistage Flash Evaporator Stage, ORNL-MIT-94 (January 1970).

10. Nuclear Desalination Progr. Ann. Progr. Rept. Activities Sponsored by the AEC, Oct. 31, 1969, ORNL-4538 (May 1970).

11. R. P. Wichner, MSF Evaporator Flow Analysis: The Submerged Jet Model and the Effect of Baffles on Flow Stability, ORNL-TM-3120 (October 1970).

12. S. J. Senatore and J. A. Smith, Study of 250-Mgd Multistage Flash Distillation Plant with Two-Level Brine Flow, ORNL-4214 (January 1969).

13. Saline Water Conv. Rept. for 1966, U. S. Dept. of the Interior, pp. 179-80.

INTERNAL DISTRIBUTION

1. L. G. Alexander
2. T. D. Anderson
3-22. S. J. Ball
23. S. E. Beall
24. L. L. Bennett
25. R. S. Booth
26. C. J. Borkowski
27. H. I. Bowers
28. J. B. Bullock
29. O. W. Burke
30. C. C. Burwell
31. R. S. Carlsmith
32. R. H. Chapman
33-37. N. E. Clapp, Jr.
38. F. H. Clark
39. T. E. Cole
40. W. B. Cottrell
41. F. L. Culler
42. R. A. Dandl
43-47. J. G. Delene
48. R. A. Ebel
49. D. M. Eissenberg
50. J. L. English
51. W.G.S. Fort
52. A. P. Fraas
53. R. O. Friedrich
54. D. N. Fry
55. L. C. Fuller
56. H. E. Goeller
57. E. W. Hagen
58-82. R. P. Hammond
83. P. H. Harley
84. J. W. Hill
85. E. C. Hise
86. H. W. Hoffman
87. J. M. Holmes
88. J. S. Johnson
89. K. O. Johnsson
90. J. E. Jones
91. L. Jung
92. P. R. Kasten
93. T. W. Kerlin
94. K. A. Kraus
95. R. C. Kryter
96. C. G. Lawson
97. D. B. Lloyd
98. M. I. Lundin
99. R. N. Lyon
100. R. E. MacPherson
101. C. D. Martin
102. H. C. McCurdy
103. J. G. Merkle
104. H. J. Metz
105. J. W. Michel
106. A. J. Miller
107. G. E. Moore
108. R. L. Moore
109. C. A. Mossman
110. J. C. Moyers
111. H. M. Noritake
112. L. C. Oakes
113. J. A. Parsons
114. H. R. Payne
115. A. M. Perry
116. J. Pidkowicz
117. J. L. Redford
118. S. A. Reed
119. M. W. Rosenthal
120. D. P. Roux
121. G. S. Sadowski
122. M. R. Sheldon
123. J. A. Smith
124. I. Spiewak
125. R. S. Stone
126. D. A. Sundberg
127. D. G. Thomas
128. W. E. Thompson
129. D. B. Trauger

130. R. Van Winkle
131. A. M. Weinberg
132. F. G. Welfare
133. G. D. Whitman
134. R. P. Wichner
135. P. P. Williams
136. J. V. Wilson
137. Gale Young
138. ORNL Patent Office
139-140. Central Research Library
141. Document Reference Section
142-144. Laboratory Records Department
145. Laboratory Records, ORNL R.C.
146-306. Laboratory Records (AEC Desalination Reports Special Distribution)

EXTERNAL DISTRIBUTION

AEC-Washington

307. Director, RDT
308. Assistant Director for Project Management, RDT
309-310. Chief, Desalting Branch, RDT
311. Assistant Director for Plant Engineering, RDT
312. Assistant Director for Reactor Engineering, RDT
313. Assistant Director for Nuclear Safety, RDT
314. Assistant Director for Engineering Standards, RDT
315. Assistant Director for Program Analysis, RDT
316. Assistant Director for Army Reactors, RDT

AEC-ORO

317. Senior Site Representative, ORNL
318. Laboratory and University Division

U.S. Department of the Interior - OSW

319-320. Director, Office of Saline Water
321-322. Chief, Distillation Division
323. Chief, Desalting Feasibility and Economic Studies

Division of Technical Information Extension

324-325.