LOCKHEED MARTIN ENERGY RESEARCH LIBRARIES
3 4456 0514381 3

CENTRAL RESEARCH LIBRARY
DOCUMENT COLLECTION

OAK RIDGE NATIONAL LABORATORY
operated by
UNION CARBIDE CORPORATION
for the
U.S. ATOMIC ENERGY COMMISSION

ORNL-TM-3282

cy. 44

RADIOISOTOPE PROGRAM (8000) PROGRESS REPORT FOR DECEMBER 1970

A. F. Rupp

OAK RIDGE NATIONAL LABORATORY
CENTRAL RESEARCH LIBRARY
DOCUMENT COLLECTION
LIBRARY LOAN COPY
DO NOT TRANSFER TO ANOTHER PERSON
If you wish someone else to see this document, send in name with document and the library will arrange a loan.

[redacted]

This report was prepared as an account of work sponsored by the United States Government. Neither the United States nor the United States Atomic Energy Commission, nor any of their employees, nor any of their contractors, subcontractors, or their employees, makes any warranty, express or implied, or assumes any legal liability or responsibility for the accuracy, completeness or usefulness of any information, apparatus, product or process disclosed, or represents that its use would not infringe privately owned rights.

ORNL-TM-3282

Contract No. W-7405-eng-26

Isotopes Development Center

RADIOISOTOPE PROGRAM (8000) PROGRESS REPORT FOR DECEMBER 1970

A. F. Rupp

Work Sponsored by

AEC Division of Isotopes Development

JANUARY 1971

OAK RIDGE NATIONAL LABORATORY
Oak Ridge, Tennessee
operated by
UNION CARBIDE CORPORATION
for the
U.S. ATOMIC ENERGY COMMISSION

LOCKHEED MARTIN ENERGY RESEARCH LIBRARIES

3 4456 0514381 3

CONTENTS

Page

RADIOISOTOPE PRODUCTION AND MATERIALS DEVELOPMENT 1

REACTOR-PRODUCED ISOTOPES - 08-01-01 1

A. Biomedical Radioisotopes 1

1. Phosphorus-33 1
2. Potassium-43 2

B. Exploratory Development of Products and Techniques 4

1. Silicon-32 4

C. Isotopic Power 4

1. Thulium-170 4

D. Reactor Products Pilot Production 4

E. Miscellaneous 5

1. HFIR Target Testing 5

ACCELERATOR-PRODUCED ISOTOPES - 08-01-02 5

A. Biomedical Radioisotopes 5

1. Indium-111 5
2. Gallium-67 5
3. Rubidium-84 9
4. Medically Useful Radioisotopes of Strontium 9
5. Bismuth-206 13

B. Accelerator Pilot Production 16

FISSION PRODUCTS - 08-01-03 17

A. Krypton-85 17

B. Separation and Purification of Krypton-85 and Fission Xenon . 18

C. Cesium-137 Gamma Source Development 18

1. Cesium Source Form Development 18

D. Cesium-137 Pilot Production 20

1. Processing and Process Status 20
2. Operational Summary 21

Page

3. Current Orders 21
4. Source Fabrication and Special Form Containers 21

E. Strontium-90 Pilot Production 21

1. Processing and Process Status 21
2. Operational Summary 22
3. Current Orders 22
4. Source Fabrication and Special Form Containers 23

F. Short-Lived Fission Products Pilot Production 23

G. Promethium-147 Source Fabrication, Powder Shipments, and Current Orders 23

APPLICATIONS AND TECHNOLOGY SUPPORT - 08-01-04 24

A. Radioisotope Characterization, Quality Control, and Standards 24

1. Radioisotope Characterization 24
2. Radioisotope Special Analysis and Quality Control 24

TECHNOLOGY UTILIZATION - 08-01-05 25

A. Information Center 25

B. Isotopes and Radiation Technology 25

C. Publications 25

RADIOISOTOPE APPLICATIONS DEVELOPMENT 26

SYSTEMS ENGINEERING APPLICATIONS - 08-03-02 26

A. Oceanographic Systems Study 26

RADIOISOTOPE SALES 27

ADMINISTRATIVE 27

PUBLICATIONS 28

JOURNALS 28

REPORTS 28

TRANSLATIONS 29

RADIOISOTOPE PROGRAM (8000) PROGRESS REPORT FOR DECEMBER 1970

A. F. Rupp

RADIOISOTOPE PRODUCTION AND MATERIALS DEVELOPMENT

REACTOR-PRODUCED ISOTOPES - 08-01-01

A. Biomedical Radioisotopes

1. Phosphorus-33

The purpose of this project is to develop methods of preparing hundred-millicurie quantities of carrier-free phosphorus-33 containing $\leq 5\%$ phosphorus-32. The two methods of producing phosphorus-33 being evaluated are based on the irradiation of highly enriched targets of sulfur-33 (>92 at. %) or chlorine-36 (approximately 63 at. %), in a fast neutron flux. Phosphorus-33 (25.2 days; 0.248-MeV β^-_{max}) has both a longer half-life and a lower energy beta than phosphorus-32 (14.3 days; 1.709-MeV β^-_{max}), which makes it advantageous for autoradiography, long-term ecological and agricultural studies, synthesis of tagged complex organophosphorus compounds, and double labeling experiments.

Synthetic ^{32}P-^{33}P mixtures were prepared and analyzed using the Cerenkov radiation-liquid scintillation counting procedure that is under development and was described earlier.[1] The results of these analyses are shown in Table 1. The precision and self-consistency of this analytical method are very good as can be seen in Table 1, whereas the absolute accuracy depends only upon the uncertainties of the initial counting efficiency determinations. A preliminary rough draft of this work has been completed and will be revised as required during the first quarter of FY 1971 for final publication.

All $K^{36}Cl$ targets were processed to provide a total inventory of recovered $K^{36}Cl$ of 9.17 g. This amount is somewhat more than the recorded weight of the targets but is consistent with the assumption that a previously suspected loss of 0.6 g was fictitious.

A target containing 2.55 g was inserted in the reactor for irradiation during this period. The yield of phosphorus-33 expected is greater than 1 Ci, which will be used to fill an existing order. Two more targets, approximately 1 g each, were made for insertion at the start of the next reactor cycle. With our present inventory of $K^{36}Cl$ targets, we have capability of producing more than 1 Ci of phosphorus-33 per month. Orders for phosphorus-33 are beginning to show an uptrend.

---

[1] A. F. Rupp, Radioisotope Program (8000) Progress Report for August 1970, ORNL-TM-3133, Oak Ridge National Laboratory, pp. 1-3.

Table 1. Analysis of Synthetic ^{32}P-^{33}P Mixtures

No.	Added (nCi)		^{33}P Content	Found (nCi)		% Difference[a]	
	^{32}P	^{33}P	(% Activity)	^{32}P	^{33}P	^{32}P	^{33}P
1	0.14	39.27	99.7	0.14	39.02	0.2	-0.6
2	6.55	78.54	92.4	6.59	78.29	0.6	-0.3
3	6.42	39.27	86.2	6.45	39.38	0.6	0.3
4	6.35	19.63	75.9	6.32	19.85	-0.5	1.1
5	15.77	19.63	55.8	16.02	19.28	1.6	-1.8
6	15.73	7.85	33.7	15.83	7.99	0.7	1.7
7	31.43	7.85	20.2	31.54	8.21	0.4	4.6
8	62.83	7.85	11.3	62.79	8.26	-0.1	5.2
9	31.40	0	0	31.14	0.00	-0.8	0.3

[a]These values were calculated from data before "round-off" and may, therefore, not agree exactly with values calculated from the data shown.

2. Potassium-43

The objectives of this project are: to prepare potassium-43 by the $^{43}Ca(n,p)^{43}K$ reaction, using isotopically enriched ^{43}CaO targets, in quantities sufficient for medical and biological experiments; to define a method for separating potassium-43 from the target in a purity suitable for medical use; and to establish cooperative programs with medical institutions interested in evaluating its usefulness. Potassium-43 with a half-life of 22.4 hr and gamma-ray emissions of 0.373 and 0.617 MeV is potentially useful for metabolic and clinical studies of blood flow, rejection of transplanted organs, and kidney functions because the dose rate would permit multiple doses.

Two shipments of potassium-43 were made during this period. Both targets were irradiated for 83 hr. The rabbits were opened in a cell, the quartz ampules were broken, and the enriched (~62%) ^{43}CaO was dissolved in HCl and transferred to a radiochemical hood for the usual ion-exchange separation. Data on the targets and products are summarized in Tables 2 and 3.

Shipments were made under medical cooperative programs to Johns Hopkins Medical Institution, University Hospitals of Cleveland, University of Mississippi Medical Center, Peter Bent Brigham Hospital, and V. A. Hospital, Durham. The group at Johns Hopkins has reported encouraging clinical results. Three patients were given potassium-43 for myocardial scanning, followed by routine cardiac angiography. In all three cases the diagnosis made independently on the basis of the potassium-43 scans

Table 2. Yield of Potassium-43 from Calcium-43 Target

	Target No. 304	Target No. 305
Weight ^{43}CaO (~62%),[a] mg	159.7	137.6
Irradiation time, hr	83	83
Product delivery date	12-1-70	12-15-70
Total product at 8:00 AM on delivery date, mCi		
Potassium-43	8.67	9.40
Potassium-42	1.0 (11.7%)	1.1 (11.8%)

[a]Recovered October 1970.

Table 3. Radionuclides Found in Dissolver Sample by Gamma Scanning

Radionuclide	Half-life	Activity at Discharge[a] (mCi)		Specific Activity at Discharge (μCi per mg of target)	
		Target No. 304	Target No. 305	Target No. 304	Target No. 305
Potassium-43	22.4 h	21.0	25.4	131	185
Potassium-42	12.4 h	5.4	5.8	34	42
Sodium-24	15.0 h	3.0	3.0	19	21
Manganese-56	2.58 h	11.1	7.6	70	55
Strontium-87m	2.83 h	30.9	24.7	193	180
Calcium-47	4.53 d	0.50	0.44	3.1	3.1
Scandium-46	83.8 d	3.9	3.9	25	28
Scandium-47	3.35 d	0.46	0.43	2.9	3.1
Europium-152m	9.3 h	5.4	3	34	22
Samarium-153	46.8 h	6	2.4	41	17
Europium-154	7.8 y	1	-	6	-
Europium-156	15.2 d	3.3	0.9	21	6
Bromine-82	35.4 h	-	0.07	-	0.5
Antimony-122	2.74 d	0.15	0.09	0.9	0.7

[a]Total target.

concurred with the diagnosis made by cardiologists from the angiography. The greatest need at present is to increase the frequency of potassium-43 availability so that full-scale clinical evaluation can proceed. Both the V. A. Hospital and Peter Bent Brigham groups report encouraging results with human subjects.

The target material from preceding runs was combined and 440 mg of ^{43}CaO was recovered. This represents a recovery of approximately 93% based on the weights of the targets. The target weights are probably a few percent high because of weight increase (due to moisture or carbon dioxide in the air) experienced in loading targets. Three new targets were made from the recovered ^{43}CaO.

B. Exploratory Development of Products and Techniques

1. Silicon-32

The formation paths for reactor production of silicon-32 depend upon the production of and subsequent neutron reaction of an intermediate. Silicon-32 exhibits many desirable physical decay characteristics that make it an interesting and attractive radionuclide for a variety of uses: (1) the only long-lived radionuclide of silicon for use in agriculture, geology, solid-state physics, etc., (2) as a parent for a ^{32}Si-^{32}P generator system which would offer a constant supply of phosphorus-32 for medical and scientific application, and (3) as a long-lived Cerenkov counting standard for phosphorus-32 determinations.

A HFIR hydraulic tube target containing 365 mg $AlPO_4$ has been fabricated, tested, accepted, and inserted for a 23-day irradiation. This target represents an initial attempt to produce silicon-32 via the phosphorus-32 intermediate production path as described earlier.[2] It is also hoped that analysis of the radioactive phosphorus isotopes in the product will yield a preliminary cross-section for the $^{32}P(n,\gamma)^{33}P$ reaction.

C. Isotopic Power

1. Thulium-170

The objectives of this research are to provide sufficient data on thulium-170 to permit assessment of its potential application as an isotopic power source for short-duration missions.

Equipment to be used in the measurement of the vapor pressure of Tm_2O_3-Yb_2O_3 mixtures has been assembled. The initial determination by the Knudsen cell technique will be carried out by the simple weight-loss measurement at various time intervals. An inert gas atmosphere will be maintained in the furnace during the heating and final cooling of the sample.

D. Reactor Products Pilot Production (Production and Inventory Accounts)

Processed Units		Service Irradiations	
Radioisotope	Amount (mCi)	Type	Number
Antimony-122	1865	U_3O_8	2
Calcium-47	15.5	Y_2O_3	1
Rhenium-186	202	Platinum-196	1
Copper-67	12.5		
Total	2095.0		4

[2]A. F. Rupp, Radioisotope Program (8000) Progress Report for November 1970, ORNL-TM-3228, Oak Ridge National Laboratory, p. 4.

E. Miscellaneous

1. HFIR Target Testing

Six hydraulic tube rabbits were tested this month, including three radioactive targets. All were satisfactory.

Three radioactive removable beryllium stringers were tested; two failed.

ACCELERATOR-PRODUCED ISOTOPES - 08-01-02

A. Biomedical Radioisotopes

1. Indium-111

The objectives of this program are to define and optimize production parameters and to make sufficient material available to cooperative participants for their evaluation of indium-111 as a diagnostic radionuclide in such applications as spinal-cerebral cisternography, aerosol lung studies, delayed brain scanning, visualization of the lymphatic system, metabolic studies of indium-labeled macroaggregates and colloids, and tumor localization. Indium-111 has gamma emissions of 173 keV (89%) and 247 keV (94%) ideally suited for external detection and an optimal half-life (2.81 days) for labeling and distribution studies which must be carried out over 24 hr or longer.

One batch of indium-111, approximately 100 mCi, was prepared and portions of the batch were supplied to interested clinicians as a special research material at full-cost recovery.

2. Gallium-67

The objectives of this program are to determine the optimal target configuration for gallium-67 (78 hr) production by the $^{68}Zn(p,2n)^{67}Ga$ reaction in acceptable purity and quantity and to provide gallium-67 for clinical applications research and development. Interest in this isotope has been spurred by evidence, obtained by the Medical Division of Oak Ridge Associated Universities (ORAU), of a high uptake of carrier-free gallium-67 by lymphoid tumors in both animals and humans.

Gallium-67 decays by electron capture with the emission of four main gamma rays of 93, 184, 296, and 388 keV with intensities of 40, 23, 20, and 8%, respectively.

Three gallium-67 preparations were shipped to ORAU during this period, and 11 smaller orders were filled for other customers. The third production run was necessitated by premature target failure (the target

failed after only 1 hr of beam time) due to beam location difficulties during irradiation. The machine problems were corrected, and the other two targets irradiated during this period performed within the production parameters summarized earlier.[3]

A summary of the accumulated production experience for the first half of FY 1971 is shown in Table 4. All data are for high-purity natural zinc tube targets (0.375-in. OD by 0.020-in. wall thickness) bombarded with 22-MeV protons. The average beam current was intentionally reduced during some irradiations in order to prolong target life and allow maximum yield. Production rates agreed well with previous production experience.

Since the process chemical yield values seem lower than previously reported, the distribution ratios and extraction efficiencies for the isopropyl ether-HCl separation system in the presence of various amounts of zinc have been investigated to determine the optimal extraction conditions. The results of this investigation are shown in Figs. 1 and 2. These determinations

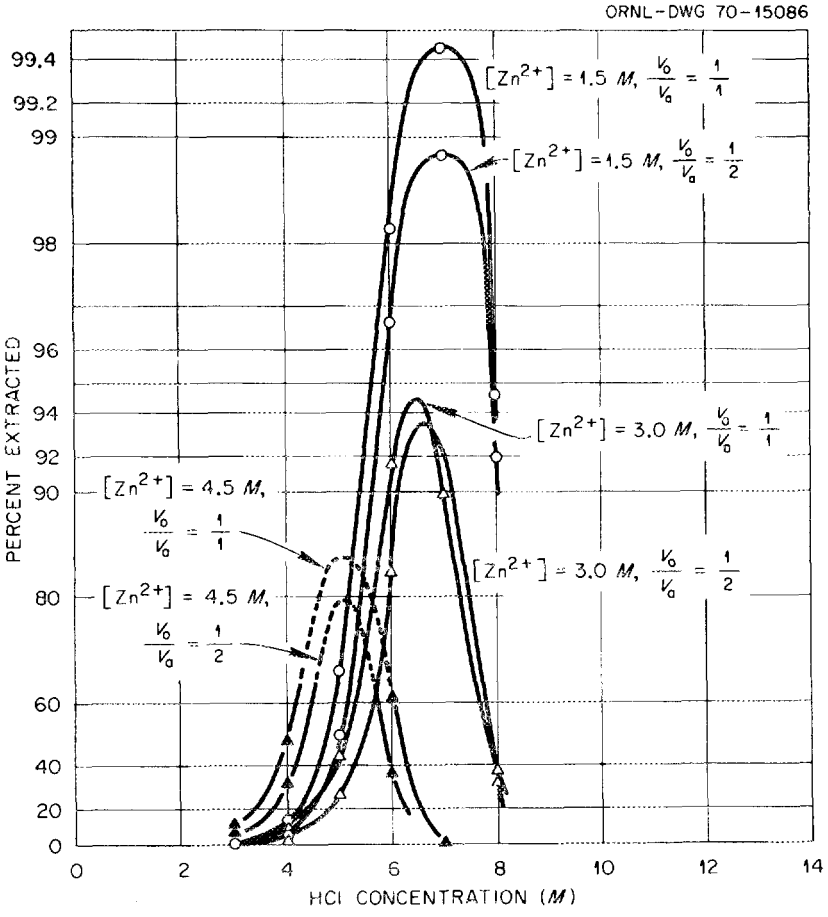

Fig. 1. Carrier-Free Gallium-67(III) Extraction Efficiency for the Isopropyl Ether-HCl System as a Function of Zinc(II) Concentration.

[3]A. F. Rupp, Radioisotope Program (8000) Progress Report for September 1970, ORNL-TM-3183, Oak Ridge National Laboratory, p. 11.

Table 4. ORNL Accumulated Gallium-67 Production Experience for the First Half of FY 1971

Run Number	Average Beam Current (μA)	Innage (hr)	Integrated Beam (μA-hr)	^{67}Ga Cyclotron Yield[a] (mCi)	^{67}Ga Production Rate[a] (mCi/mA-hr)	Quantity Shipped[b] (mCi)	^{66}Ga[b] (%)	Gallium Chemical Yield (%)
Ga-67-52	313	2.33	730	351	482	131	<0.5	100
Ga-67-53	314	3.00	943	454	482	193	<0.5	98
Ga-67-54	334	1.25	417	231	553	103	9.1	95
Ga-67-55	307	1.75	537	268	498	133	9.3	95
Ga-67-56[c]	310	4.90[d]	1514	427		178	<0.5	94
Ga-67-57	313	3.42	1071	529	494	175	<0.5	99
Ga-67-58	294	4.12[e]	1212	562	464	210	2.6	85
Ga-67-59	253[f]	3.75[e]	963	489	508	186	2.3	87
Ga-67-60[c]	284[f]	4.17[e]	1185	507		149	~1	77
Ga-67-61	305[f]	1.00[d]	305	156	511	65	2.6	93
Ga-67-62	292	3.42[e]	1000	459	459	56	<0.5	88
Ga-67-63	301	4.00[e]	1203	552	459	224	3.1	85

[a]Values calculated as of end of bombardment.
[b]Time reference: 8:00 AM on day after shipment.
[c]Two targets, irradiated separately, processed together. Values omitted from data analysis.
[d]Run terminated by target failure.
[e]Target run to failure for maximum possible production.
[f]Cyclotron operating difficulties.

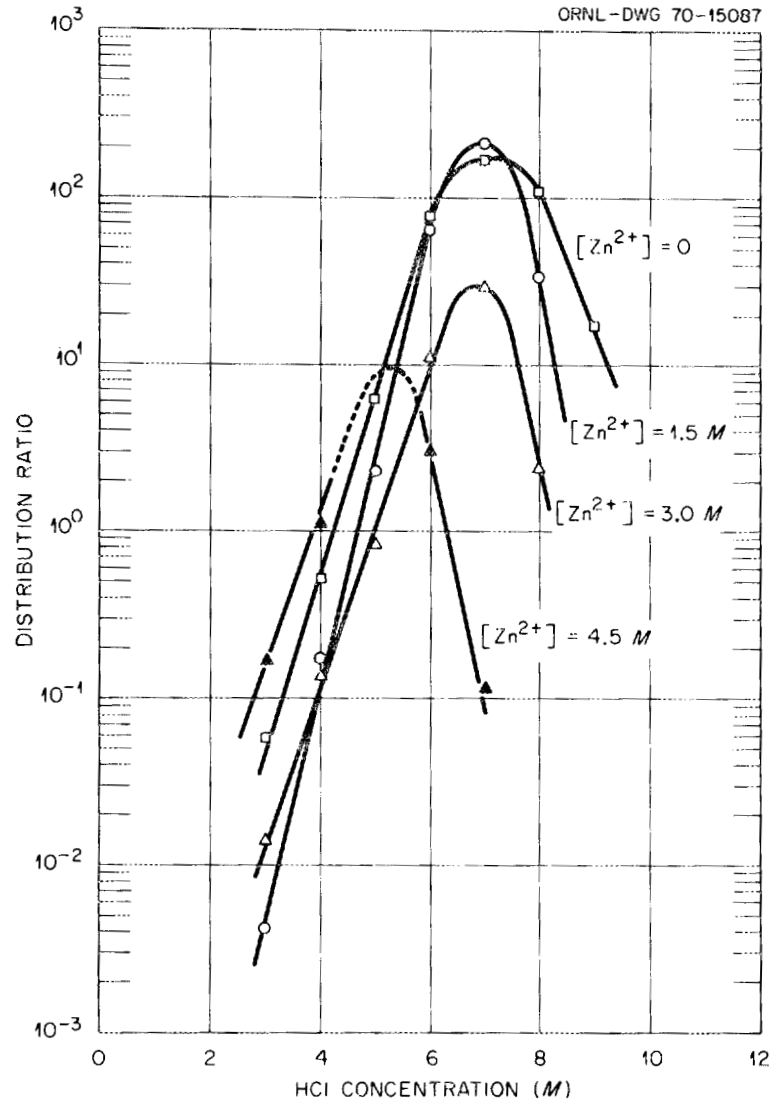

Fig. 2. Isopropyl Ether Extraction of Carrier-Free Gallium-67(III) From HCl Solution.

have been run at different $ZnCl_2$ concentrations and at different phase volume ratios, i.e., $V_o:V_a$ = 1:2 and $V_o:V_a$ = 1:1, in an attempt to most closely duplicate the zinc target dissolver solution encountered during the processing procedures in current use. The dashed sections of the $[Zn^{2+}]$ = 4.5 M curves represent the area where a three-phase separation was encountered, i.e., both a "light" and "heavy" ether phase separated. Since this high zinc ion concentration was beyond the range of specific interest, this phenomenon was not investigated further. There is a noticeable decrease and shift of the distribution ratio maxima with increasing $ZnCl_2$ which can be correlated with the increased solubility of the ether phase in the aqueous phase at high HCl concentrations. The concentrations of zinc ion and HCl will be adjusted to 1.5 M and 7.0 M, respectively, in future processing to maximize extraction efficiency.

3. Rubidium-84

The objectives of this program are to improve the technology for the production of higher purity rubidium-84 by use of an enriched krypton-84 target. Rubidium-84 is usually produced by proton bombardment of natural krypton targets, but this product is unsuitable for positron camera scanning due to appreciable amounts of rubidium-83 produced simultaneously. The use of rubidium-84 for myocardial scanning with a positron camera has increased the demand for a higher purity product.

Two gas storage containers have been assembled, leak tested, and their volume measured so they can be used for enriched krypton-84 storage. It is felt these storage containers will allow an accurate method to maintain a better gas inventory scrutiny and to determine target handling losses.

4. Medically Useful Radioisotopes of Strontium

Our purpose in this project is to examine methods of preparing high radiochemical and isotopic purity samples of the medically useful radioisotopes of strontium, 25-day strontium-82, 64.7-day strontium-85, and 2.8-hr strontium-87m. Through cooperative efforts we are also able to establish the decay schemes which will allow more accurate determinations of the body radiation for these radioisotopes.

The radioisotopes of strontium are used in physiology and nuclear medicine in the investigation of calcium metabolism, calcium kinetics in bone, differentiation of pathologic from traumatic fractures, primary bone tumors such as osteogenic sarcoma, metastatic cancer to the bone from mammary or prostate malignancies, and other benign bone conditions.

a. Strontium-87m

Our initial work in this area was that of the development of a high yield and high radiochemical purity yttrium-87-strontium-87m generator system using the carbonate system.[4]

More recent work involved the examination of the decay scheme of both yttrium-87 and strontium-87m; namely the conversion coefficients for the 388-keV and 483-keV transitions of strontium-87. Since the internal conversion coefficient, defined as the ratio of conversion electrons to gamma rays (e/γ), is an index of the number of photons "converted" to electrons, dose calculations are affected. Earlier work[5,6] suggested

---

[4]J. F. Allen and J. J. Pinajian, Intern. J. Appl. Radiation Isotopes 16, 319-25 (1965).
[5]S. Hultzberg, D. J. Horen, and J. M. Hollander, Nucl. Phys. 28, 471 (1961).
[6]H. K. Carter and J. H. Hamilton, Z. Physik 235, 383 (1970).

the possibility of a systematic error in the measurement of the conversion coefficient of strontium-87. Our work in cooperation with Vanderbilt University,[7] published this quarter, showed that the earlier work did not have any systematic error. In addition it showed that there is reasonable agreement between theory[8,9] and experiment in the evaluation of the K-conversion coefficient (α_K) for the 388-keV and 483-keV transitions in strontium-87. Table 5 shows the experimental and theoretical values of α_K.

Table 5. Comparison of Experimental and Theoretical K-Conversion Coefficients of Transitions in ^{87}Sr

Transition Energy (keV)	α_K Experimental		α_K Theoretical	
	Present Work[a]		Sliv and Band[b]	Hager and Seltzer[c]
388	0.162	± 0.010	0.17	0.183
483	0.00260	± 0.00013	0.0025	0.00252

[a]A. F. Kluk, D. Krmpotić, J. H. Hamilton, and J. J. Pinajian, Z. Physik 235, 391 (1970).

[b]L. A. Sliv and I. M. Band, Tables of Internal Conversion Coefficients of Gamma Radiation, Academy of Sciences of the USSR, Moscow-Leningrad, 1956 and 1959.

[c]R. Hager and E. Seltzer, Nucl. Data, A4, 1 (1968).

In the case of the 388-keV (99%) transition in strontium-87m, about 14% of the transitions do not result in a 388-keV gamma ray, but rather in the appearance of a K-conversion electron whose dose rate differs considerably from that of the gamma ray.

A collateral work has been recently published[10] as a result of the technology developed during our work on the strontium-87m generator.[11] The 2.8-hr strontium-87m is generated from the 80-hr yttrium-87 parent. The purity and efficacy of the strontium-87m is dependent on the ability to fix the yttrium-87 parent on an inorganic exchanger and the ability to elute the strontium-87m daughter in high yields.

---

[7]A. F. Kluk, D. Krmpotić, J. H. Hamilton, and J. J. Pinajian, Z. Physik, 235, 391 (1970).

[8]L. A. Sliv and I. M. Band, Tables of Internal Conversion Coefficients of Gamma Radiation, Academy of Sciences of the USSR, Moscow-Leningrad, 1956 and 1969.

[9]R. Hager and E. Seltzer, Nucl. Data, A4, 1 (1968).

[10]A. V. Ramayya, B. van Nooijen, J. W. Ford, D. Krmpotić, J. H. Hamilton, J. J. Pinajian, and N. R. Johnson, Phys. Rev. C2, 2248-78 (1970).

[11]Allen and Pinajian.

In order to understand the behavior of carrier-free yttrium-87 and at the same time accelerate such a study, the short-lived analogue of yttrium-87, the 14.6-hr yttrium-86, was used. In the course of developing high-purity chemical separations, portions of these ultra-high purity samples produced were utilized in a cooperative effort with Vanderbilt University (Nashville) and the Chemistry Division of ORNL to study the decay scheme of the 14.6-hr yttrium-86.

The published work represents an unusually complete investigation of the decay of a radionuclide involving 107 gamma rays. Of these, 97 were placed in a proposed decay scheme involving 31 levels. A recent issue of Nuclear Data[12] concerning mass chain 86 utilizes our data almost en masse.

This essentially completes our work on the strontium-87m radionuclide: its production,[13] separation and purification,[13] the preparation of a radioisotope generator,[13] and the clarification of the decay scheme.[14]

b. Strontium-82

A collateral work in collaboration with the Nuclear Data group at ORNL was started in the preparation of 25-day strontium-82 using the Oak Ridge Relativistic Isochronous Cyclotron (ORIC) to initiate at 40 MeV the ^{85}Rb-(p,4n)^{82}Sr reaction. The strontium-82 decays by EC to 1.3-min rubidium-82, which suggests a convenient radioisotopic generator source of short-lived rubidium suitable for dynamic blood flow and kinetic studies.

The separation chemistry involves repeated precipitations of the strontium with strontium carrier and rubidium hold-back carrier in chilled fuming nitric acid. The final sources contained strontium-82 plus rubidium-82 and a small amount of strontium-85 but no other detectable impurities. The gamma spectra were measured at high resolution with a 30-cm^3 Ge(Li) detector in singles and in coincidence with a 12.7- by 12.7-cm NaI(Tl) scintillation detector. Ten gamma rays were observed, their energies and relative intensities accurately measured, and, as shown in Fig. 3, a level scheme proposed[15] with probable spins and parity assignments. The spin and parity assignments give indications of the multipolarity of the transition. These, in turn, are necessary for the calculation of the gamma-ray dose rate. Also the measured intensities of the gamma rays relative to the 511-keV photon allow us to construct a decay scheme with correct beta branching. This latter step is most important and necessary for dose calculations.

Further work on the measurement of yields and the preparation of a suitable radioisotope strontium-82:rubidium-82 generator system will have to wait until an approximately 40-MeV proton beam is available to the Isotopes Development Center for production purposes.

---

[12] R. L. Auble, Nuclear Data B5, 109 (1970).
[13] Allen and Pinajian.
[14] Kluk, Krmpotić, Hamilton, and Pinajian.
[15] S. Raman and J. J. Pinajian, Nucl. Phys. A125, 129 (1969).

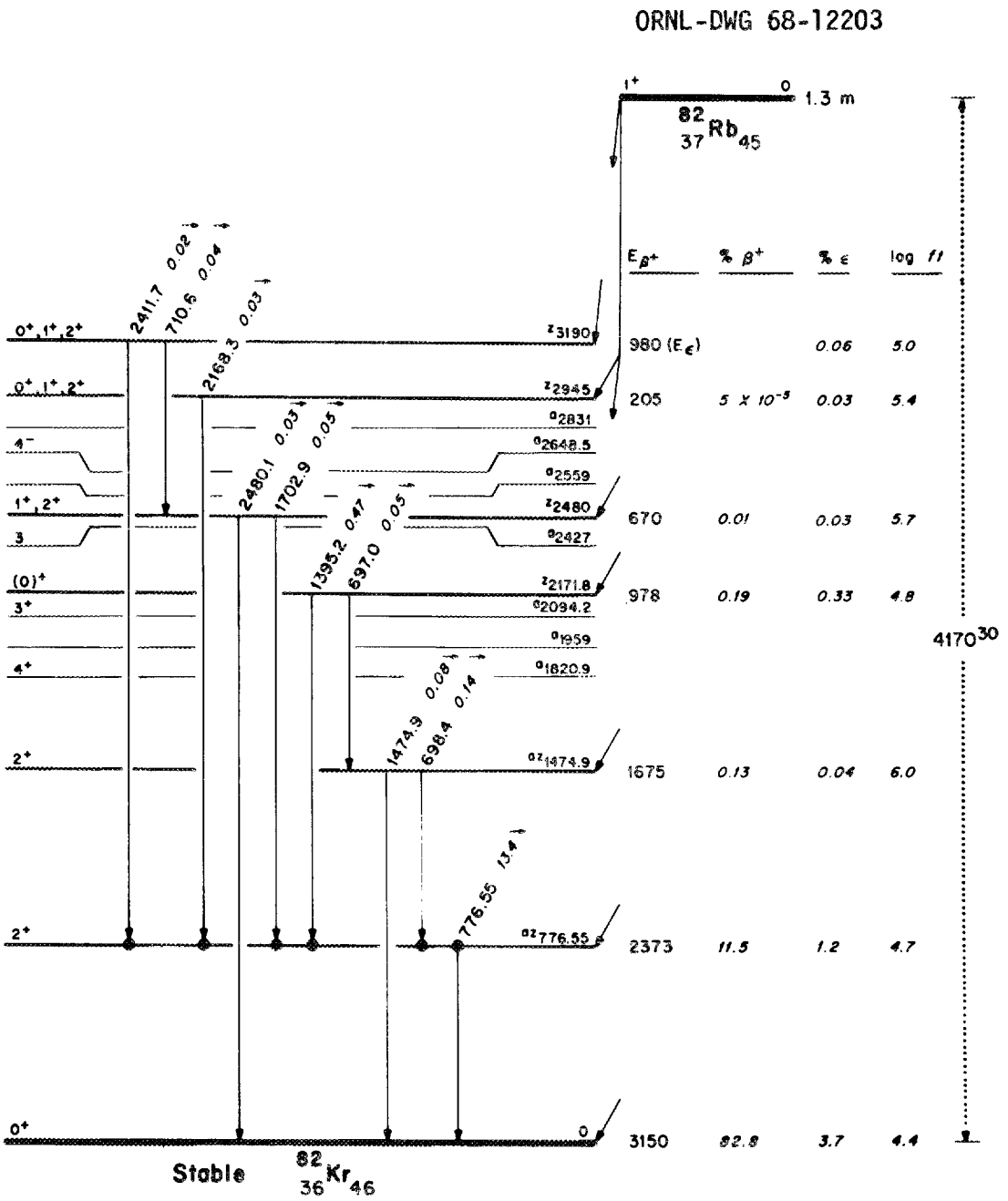

Fig. 3. Decay Scheme of Rubidium-82.

c. Strontium-85

Our primary interest in 64.7-day strontium-85 is a consequence of our ability to isolate high-purity samples of strontium activity. Sattler[16] has reported the existence of 356-keV and 878-keV gamma rays in addition to the 514 keV in the decay of strontium-85. These gamma rays have been included in the proposed decay scheme by Lederer, Hollander, and Perlman.[17] We suspect that the 356-keV line is due to the 7.2-year barium-133 (356-keV gamma – 78%). The 878 keV (±0.012 MeV) is probably another impurity or a random sum peak of the 514 keV (strontium-85) and the 356 keV (barium-133). Since there really is an energy level in rubidium-85 at 870 keV which has been seen by Coulomb excitation, it clouds the issue.

During the next quarter, a sample of strontium-85, which is presently being produced, will be chemically purified and examined with a high resolution Ge(Li) spectrometer and a Compton suppressed spectrometer in a collaborative effort with the Livermore Laboratory and the Nuclear Data group. This short experiment should answer the question of the existence of the two ambiguous and uncertain gamma rays and resolve the uncertainties in the decay scheme.

5. Bismuth-206

The purpose of this program is to prepare high radiochemical purity bismuth-206 in high yield, establish a definitive decay scheme, measure the production yield, prepare a suitable radiopharmaceutical product, and test the product.

The examination of bismuth-206 by groups in Germany (Mundinger), Netherlands (van der Werff), and England (Matthews) has demonstrated that this isotope, among all others including ^{43}K, ^{84}Rb, ^{52}Mn, ^{74}As, ^{110}Ag, ^{68}Ga, ^{65}Zn, ^{95}Zr, ^{131}I, and various compounds labelled with ^{131}I, ^{110}Ag, and ^{51}Cr, was very much better than any for brain tumor localization. Bismuth-206 has a very high tumor/brain concentration ratio and has, as well, a low concentration in muscle and blood. It is the opinion of these workers that bismuth-206 is the best tumor localization agent. Other bismuth radioisotopes are also potentially very useful because of the availability of half-lives varying from 28 yr for bismuth-207 to 1.8 hr for bismuth-201.

The 6.24-day bismuth-206 was produced by irradiating for several hours natural lead (1.48% lead-204, 23.6% lead-206, 22.6% lead-207, and 52.3% lead-208) with 30.5-MeV protons using the Philips-Duphar production

---

[16] A. R. Sattler, Phys. Rev. 127, 854 (1962).
[17] C. M. Lederer, J. M. Hollander, and I. Perlman, Table of Isotopes, 6th ed., Wiley, New York, 1967.

cyclotron at Petten, North Holland, Netherlands, under a cooperative program. Under these conditions, bismuth-206 is produced by

Reaction	Q Value (MeV)
$^{206}Pb(p,n)^{206}Bi$	-4.43
$^{207}Pb(p,2n)^{206}Bi$	-11.17
$^{208}Pb(p,3n)^{206}Bi$	-18.54

In addition, varying amounts of 11.8-hr bismuth-203, 11.2-hr bismuth-204, and 15.3-day bismuth-205 plus a negligible amount of 28-year bismuth-207 are produced. However, within 48 hr after the end of the irradiation, essentially all the activities die out except 6.24-day bismuth-206 [i.e., as assayed with a 3- by 3-in. NaI(Tl) spectrometer for nuclear medicine applications]. The yield of bismuth-206 is approximately 1 mCi/μA-hr. The specific activity depends on the total irradiation time since there is about 0.15 mg inactive bismuth contaminant in the lead.

The target was processed by heating the copper base plate containing the 5-cm-diam by 0.3-cm-thick lead target and scraping out the lead. The lead was dissolved in fuming nitric acid and the bismuth then precipitated with ammonium hydroxide. This step removes copper and coprecipitates bismuth and lead. The precipitate was isolated by filtration through a glass frit, dissolved in nitric acid, and adjusted in pH; the bismuth was extracted with dithizone solution. After washing traces of lead out of the dithizone, the solution was evaporated to dryness, treated with nitric acid to destroy the organic residue, and taken up in dilute nitric acid. Further reduction of solids was accomplished by adding iron carrier and coprecipitating bismuth on iron hydroxide a number of times. The iron was subsequently removed by extraction with methyl isobutyl ketone (4-methyl-2-pentanone). The aqueous phase containing the bismuth activity was treated with nitric acid to destroy organic material and then taken up in hydrochloric acid or nitric acid, depending on the application.

Because of the obvious presence of small amounts of the 15.3-day bismuth-205 activity, a portion of the bismuth-206 was delivered to Livermore where it was passed through a small mass spectrometer. The bismuth-206 and bismuth-205 fractions were then shipped to Vanderbilt University (Nashville) and Aerospace Research Laboratory (Dayton) for use.

The decay scheme of bismuth-206 as given by Lederer, Hollander, and Perlman[18] shows 28 gamma rays (out of 31 gamma rays observed) placed in 12 levels of lead-206 (evidence for another nine levels exists from nuclear reaction studies). Since calibration (assay) and dose consideration depend on an accurate knowledge of the decay scheme and on the knowledge of the degree of conversion of photons in the K shell and L subshells, a cooperative program was initiated to establish a definitive decay scheme giving absolute ratios and conversion coefficients of the gamma rays. For this purpose, the following organizations were involved in the cooperative program:

---

[18]Lederer, Hollander, and Perlman, p. 396.

Organization	Equipment	Purpose
Philips-Duphar Cyclotron and Isotopes Laboratory Petten, North Holland The Netherlands	Philips Universal Isochronous Cyclotron 31-MeV protons 18-MeV deuterons 36-MeV alphas	Production and preliminary chemistry
Isotopes Development Center Oak Ridge National Laboratory	Ge(Li) spectrometer	Final chemistry and sample preparation Singles spectra
Aerospace Research Laboratory Wright-Patterson Air Force Base Ohio	Iron-core, double-focusing beta spectrometer High resolution Ge(Li) spectrometer (2.2 keV for 1.33-MeV line)	Internal conversion coefficients Singles spectra
Lawrence Radiation Laboratory Livermore, California	Mass spectrometer Compton suppression Ge(Li) spectrometer	Separation and isolation of ^{206}Bi and ^{205}Bi Compton suppressed singles spectra
Physics Department Vanderbilt University Nashville, Tennessee	Ge(Li)-Ge(Li) (4096 x 4096 channel) coincidence system	Beta-beta coincidence

The preliminary results of the work were presented at the Houston Meeting of the American Physical Society and the abstract has been published:[19] 65 gamma rays were observed and, of these, 60 were placed (34 by coincidence and 26 by energy) in a decay scheme which consisted of 19 levels (16 determined by coincidence and three by energy).

In the coming period, our work will be correlated with other recent work (Japan, unpublished) and a paper on the decay scheme will be submitted for publication.

As a result of the mass separation, we had the opportunity to obtain high isotopic purity bismuth-205 in an isolated form. These samples plus the residual bismuth-205 activity in our earlier experiments have enabled us to make progress on the decay scheme of 15.3-day bismuth-205. In the coming period we anticipate producing another sample of bismuth-205 and finishing our study of this nuclide.

The 11.2-hr bismuth-204 has been of interest locally (Vanderbilt University Medical Center) as an alternative bismuth activity which has many good features. We anticipate investigating the production, chemical separation, product processing, and sample preparation of this nuclide early in 1971.

B. Accelerator Pilot Production (Production and Inventory Accounts)

Table 6 gives the December 1970 accelerator irradiations for ORNL and non-ORNL customers.

Table 6. Accelerator Irradiations for December 1970

Product	No. of Runs	Time (hr:min) Beam	Misc.	Total	Total Charges
		ORNL Programs			
Gallium-67	2	7:25	2:15	9:40	$ 969.37
Indium-111	1	3:15	1:00	4:15	387.65
Total		10:40	3:15	13:55	$ 1,357.02
		Non-ORNL Programs			
Bismuth-205	1	1:00	1:15	2:15	$ 335.50
Radiation damage	2	60:00	3:30	63:30	9,039.99
Rubidium-84	1	7:00	1:40	8:40	2,136.66
Yttrium-87	3	8:15	3:45	12:00	1,860.30
Total		76:15	10:10	86:25	$13,372.45

[19] D. C. Camp, J. C. Manthuruthil, A. V. Ramayya, J. H. Hamilton, and J. J. Pinajian, Bull. Am. Phys. Soc. 15, 1649 (1970).

FISSION PRODUCTS - 08-01-03

A. Krypton-85 Enrichment

No gas transfers were made in any of the units (see Fig. 4) this month. The krypton-85 units appear to be very near equilibrium and it will be necessary to dump the depleted ends and replace them with active material in January.

Unit	Activity in Unit (Ci)	Time Since Last Product Removal (days)	Count Rate in Product Section (counts/min) Nov 1970	Dec 1970
A	—	224	—	—
AB	1537	100	10,050	10,500
B	1406	100	8,350	8,850
C	1566	100	8,550	8,600
CD	2281	240	12,000	12,100
D	1360	100	6,750	7,000

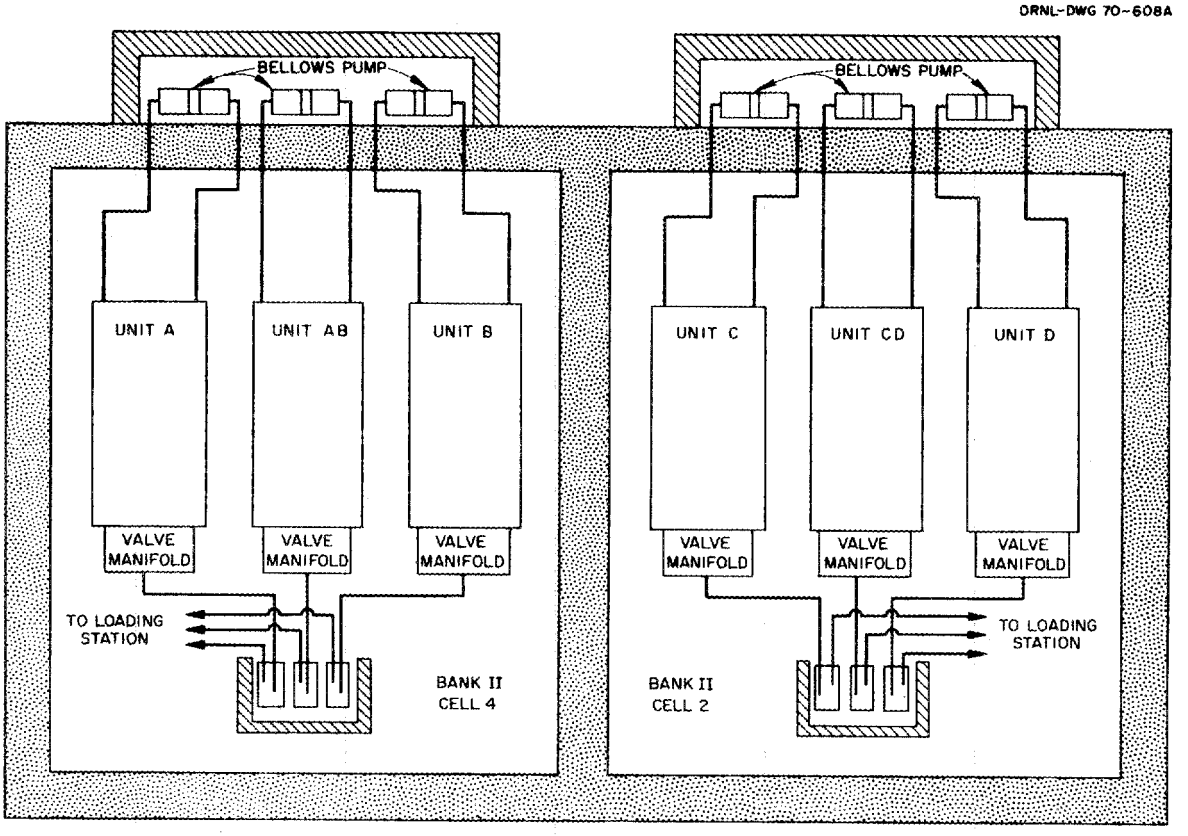

Fig. 4. Schematic Arrangement of Krypton-85 Columns.

B. Separation and Purification of Krypton-85 and Fission Xenon

A program to decontaminate approximately 1000 liters of fission gas to a krypton-85 level of less than 10 μCi/liter has been completed. The batch quantities of fission gas and the krypton-85 contaminants are:

Batch No.	Xenon (liters)	Krypton-85 (μCi/liter)
1	339	<1[a]
2	274	<1
3	333	<1

[a]Limit of detection.

A typical mass spectrometer analysis of the xenon gas is shown below:

Compound	Percent
H_2	<0.1
N_2 + CO	0.7
O_2	0.06
Ar	<0.1
CO_2	3.1
Xe	96.1

Although the original specifications did not stipulate the quantity of CO_2 allowable, we will remove the CO_2.

C. Cesium-137 Gamma Source Development

1. Cesium Source Form Development

Cesium-137 chloride has been the compound of choice for radiation sources in applications of moderate temperature conditions. In many respects cesium chloride is the ideal compound; the cesium weight per unit volume is high, the radiation resistance of the CsCl is excellent, the compatibility with stainless steel at ambient temperatures is excellent, and its preparation is straightforward. However, the projected conditions of use of cesium-137 gamma sources are increasingly severe with respect to temperature, and some applications indicate the need for a cesium source material which has low solubility. In view of these projected conditions of use, the testing of ^{137}CsCl at elevated temperatures is being done and the development of a low solubility, temperature-resistant source form of cesium is being studied.

The chemical analysis is now available for cesium niobates produced by aqueous slurry reactions between CsOH and Nb_2O_5. To investigate how the product composition varies with the reaction temperature and time, the atomic ratio of niobium to cesium in the product has been computed from

the chemical analysis. The result (see Table 7) shows that with a short reaction time (Run A), the Nb/Cs ratio appears to increase initially as the calcining temperature is raised from 120°C to 500°C. However, further increase in the temperature seems to reduce the Nb/Cs ratio. On the other hand, when the reaction time is extended (Run B), the Nb/Cs ratio remains nearly constant.

Table 7. Composition of Cesium Niobates as Influenced by Reaction Time and Calcining Temperature

Run No.[a]	Calcining Temperature (°C)			
	120	500	700	1000
	Atomic Ratio of Nb to Cs			
A	1.29	1.79	1.54	1.28
B	1.50	1.53	1.48	1.56

[a]The reaction time for Run B was twice that for Run A.

The behavior exhibited by Run A is probably attributable to its shorter reaction time than Run B. Thus, in the low calcination temperature range (up to 500°C), the process would be dominated by the conversion of unreacted CsOH to Cs_2O with resulting losses of cesium (Cs_2O decomposes at about 400°C). This could account for the increase in the Nb/Cs ratio at 500°C. The drop in the value of Nb/Cs at high temperatures (700°C to approximately 1000°C) was presumably caused by losses of niobium compounds in this temperature range. The relatively small variation in the Nb/Cs ratio (1.48 to approximately 1.56) for Run B is probably an indication of a higher degree of conversion than Run A.

Stability of the products from Run B in various solvents has been investigated using 0.1 N HCl, 0.1 N NaOH, seawater, and water as solvents. The samples placed in solvents were first kept at 75°C for approximately 2 hr under reflux, followed by cooling to room temperature and were left at this temperature for 24 hr. The undissolved residue was then removed by filtration. The rate of filtration and appearance of the filter cake varied considerably depending upon the solvent used. The fastest filtration was achieved with the HCl solution (maximum filtration rate was approximately 5.5 ml/min) followed by the NaOH solution (maximum rate: 4.3 ml/min). The seawater solution was most difficult to filter and it took about 35 times as long as the HCl solution to complete the filtration. The material balance computed from the analysis of the filtrate for cesium and niobium shows that about 70 to 80% of the material remains undissolved. Samples of the undissolved residues will be analyzed.

D. Cesium-137 Pilot Production (Production and Inventory Accounts)

1. Processing and Process Status

The ion-exchanger bed of the HAPO-IC cask was converted to the sodium form by passing 600 liters of 2.7 M $NaNO_3$ solution upflow through the bed at 10 liters/min, then the bed was rinsed. Cask drying, sealing, and testing will be done in January preparatory to shipping the cask back to Richland, Washington. Analytical data on this solution and the solutions obtained during the elution done in November gave the following results:

Operation	Type Solution	Volume (liters)	Cesium-137 (Ci)
Bed hydration	Water	600	1,900
First elution	5 M NH_4NO_3	1,200	364,700
Second elution	5 M NH_4NO_3	1,200	19,000
Rinse	Water	600	200
Sodium conversion	2.7 M $NaNO_3$ (+ rinse water	600	2,400
Total Cesium-137 Accounted For			388,200

Elemental analysis of the first and second elution fractions showed no unexpected contaminants. The ratios of cesium to other alkali metals are listed below along with the corresponding values from a test elution conducted at the Atlantic Richfield Hanford Company.

Element	Moles of Element per Mole of Cesium	
	ORNL Elution	ARHCO Test
Sodium	0.14	0.13
Potassium	0.35	0.22
Rubidium	0.026	0.040

The values are in good agreement and indicate that the loading/elution cycles are reproducible. No processing of the cesium-137 feed solutions has been done. The current cesium-137 process status is:

Item	Cesium-137 (Ci)
In-process material	561,000
Cesium-137 chloride products	220,700
Sources in fabrication	0
Completed sources awaiting shipment	46,500

2. Operational Summary

Cesium-137	December 1970 Number	December 1970 Amount (Ci)	FY 1971 Number	FY 1971 Amount (Ci)
HAPO shipments received	0	0	1	388,200[a]
Product batches prepared	0	0	0	0
Sources fabricated	8	2,000	62	43,400
Special form containers loaded	0	0	9	97,000
Sources shipped to customers	8	2,000	283	163,300
Special form containers shipped	1	500	12	98,000

[a]Based on radiochemical analysis.

3. Current Orders

A list of current orders for cesium-137 as sources or bulk powder is shown below:

Customer	Amount (Ci)	Estimated Shipping Date
J. L. Shephard and Associates	540	January 1971
Brookhaven National Laboratory	203,000	March 1971
American Hoechst Corporation	5	April 1971
CEA, France	200,001	April 1971
Total	403,546	

Orders on hand for cesium-137 as bulk powder or sources to be scheduled and shipped as released by the customer include Atomic Energy of Canada, approximately 155,800 Ci, and Radiation Resources, Inc., 200,001 Ci. Cesium sources containing 40,000 Ci are on hand awaiting receipt of shipping instructions from Radiation Resources.

4. Source Fabrication and Special Form Containers

Work was completed on an order for eight diluted cesium-137 chloride sources. Each of these sources contained 250 Ci of cesium-137. One can containing 500 Ci of cesium-137 powder was shipped to 3M Company.

E. Strontium-90 Pilot Production (Production and Inventory Accounts)

1. Processing and Process Status

Fabrication of $^{90}SrTiO_3$ pellets on the vacuum hot press continued, and the pellets required for completion of an order for five 110,000-Ci sources were made. Pellets were made from calcined powder, sintered powder, and mixtures, with no significant differences in pellet quality. The higher density of crushed sintered material permitted die loadings of up to 150 W/pellet.

Experience with the vacuum hot press has been generally good. Of the 25 pellets pressed to date, there has been only one failure during pressing. In that case the pellet fractured as it was being ejected from the die. The average density of the completed pellets was 4.6 g/cm^3 (range 4.3-4.9). The average power density was 0.876 W/cm^3 using fuels ranging in power concentration from 0.185 to 0.206 W/g. The most troublesome operational problem was a gradual increase in the pressure required to eject the pellets from the TZM dies after repetitive use. Some of this was attributed to a buildup of traces of $^{90}SrTiO_3$ in the die, but in the worst cases there was also evidence that some melting of the nickel support screens inside the pellets had occurred. Since the optimum pressing temperature is close to the melting point of nickel and the temperature measurement (by optical pyrometer through the cell window) is not exact, it was decided to use platinum screens instead of nickel. This technique reduced the problem. Some completed pellets were broken during storage, transfers, and handling due to mechanical and/or thermal stresses.

Plans for January 1971 include processing of $^{90}Sr_2TiO_4$ fuel for the preparation of some pellets which have relatively high power-density requirements. These pellets will be similar to the pellets made for the Sentinel sources and will be encapsulated in a total of six units. The current strontium-90 process status is:

Item	Strontium-90 (Ci)
In-process material	1,390,000
$^{90}SrTiO_3$ products	394,000
Sources in fabrication	328,000
Returned SNAP sources	295,000
Completed sources awaiting shipment	125,000

2. Operational Summary

	December 1970		FY 1971	
Strontium-90	Number	Amount (Ci)	Number	Amount (Ci)
HAPO shipments received	0	0	0	0
Product batches prepared	0	0	0	0
Sources completed	2	218,000	8	363,300
Special form containers loaded	0	0	25	53,400
Shipments to customers	3	218,000	25	365,600

3. Current Orders

A list of current orders for strontium-90 as sources or bulk powder is shown below:

Customer	Amount (Ci)	Estimated Shipping Date
U. S. Navy	340,000	January 1971
U. S. Navy	208,000	January 1971

Orders on hand for bulk powders or sources to be scheduled and shipped as released by the customer include Isotopes, Inc., approximately 105,000 Ci and 20,000 Ci, and U. S. Navy, 424,000 Ci.

4. Source Fabrication and Special Form Containers

The strontium-90 work during December was concerned with the fabrication and testing of large heat sources to be used in Sentinel-25F generators. Two of these sources have been completed, loaded into generators, and shipped. Three more sources are in fabrication and shipment of these sources is expected early January 1971.

Each source contained approximately 109,000 Ci of $^{90}SrTiO_3$ (approximately 740 W). Test weld inspection revealed weld penetrations ranging from 0.066 in. to 0.125 in. with an average of 0.091 in. Prior to loading into generators, each source was leak tested using krypton-85. Both sources had leak rates of less than 5×10^{-6} cm^3/sec. The loading of the two generators was completed without incident and shipment has been made.

Two cans containing 10 Ci of strontium-90 powder per can were shipped to Buchler and Company.

F. Short-Lived Fission Products Pilot Production (Production and Inventory Accounts)

Isotope	Number of Batches	Amount (Ci)
Xenon-133	3	~1100
Niobium-95	1	2

The niobium-95 run listed above was a rework of a product made in November that was found to be high in zirconium-95.

In addition to the above, an iodine-131 run was made, but analytical results will not be available until January.

G. Promethium-147 Source Fabrication, Powder Shipments, and Current Orders

One can of promethium-147 powder containing 613 Ci was shipped to Munich University.

A list of current orders for promethium-147 as sources or bulk powder is shown below:

Customer	Amount (Ci)	Estimated Shipping Date
McDonnell Douglas Astronautics Co.	50,000	February 1971[a]

[a]To be shipped from Richland, Washington.

APPLICATIONS AND TECHNOLOGY SUPPORT - 08-01-04

A. Radioisotope Characterization, Quality Control, and Standards

1. Radioisotope Characterization

The recipients of the Isotope User's Guide (ORNL-IIC-19, 1969) have been asked about their reactions to various sections. Most of the respondents have found the table of properties of radioisotopes "very useful." Their suggestions for improvements will be considered when preparation of a revision is begun. Our value for the half-life of cerium-144, 284.9 ± 0.8 days, is in good agreement with the value adopted by UKAEA, 284.4 ± 0.4 days.[20] Among reports reviewed in this period was the draft of DID Research and Development Projects for 1970. In answer to an inquiry about detection of tracer mercury-203 in the metal, the minimum required concentration was deduced, considering self-absorption of the gamma radiation, distance, and detector efficiency.

2. Radioisotope Special Analysis and Quality Control

The limited study of standards for silver-110m has been concluded. As reported last month, local measurement has been shown to be correct, both by independent direct standardization and by agreement with the product of a reputable supplier. The company whose first shipment of a so-called silver-110m standard contained silver-108m sent a replacement (of certified content and volume) in two portions. Before the bottles were opened, the contents were measured by 4π ionization chamber. Both had a high activity and differed from each other by 42%. The bottles were opened and aliquots were taken. Their contents were erratic and low, suggesting the presence of a microprecipitate, perhaps of AgCl. This possibility was confirmed by centrifuging; the supernatant liquids were low in activity. In fact, the emptied bottles contained 40-53% of the original activities. On a recent iron-59 standard from the National Bureau of Standards, another purchaser made an independent measurement which was identical with that of NBS, thus agreeing with ours within 0.4%.

A one-day symposium on radioactivity standards has been arranged for the American Chemical Society meeting March 29 in Los Angeles. Papers will be presented by representatives of NBS, the British Radiochemical Centre, the Environmental Protection Agency, and other organizations. S. A. Reynolds will give a summary of the survey of the United States' needs for standards, and L. R. Zumwalt will report on the resulting recommendations of the National Research Council standards panel.

[20] M. J. Cabell and M. Wilkins, Concerning the Half-Life of ^{144}Ce, AERE-R 6529 (1970).

TECHNOLOGY UTILIZATION - 08-01-05

A. Information Center

In December, 97 requests for information were filled, the requesters being about equally divided among industry, colleges and private laboratories, and state and federal government organizations. In filling these requests, 250 items were sent out: 21 special literature searches, 189 IIC documents already prepared, 30 documents from other sites, and 10 minor searches. Ten sales letters were translated. A list of reviews in progress is shown below.

Title	Author(s)	Status, % Complete
DID Research and Developments - 1970	Isotopes Information Center Staff	80
Iodine-125	P. S. Baker and Martha Gerrard	30
List of AEC Radioisotope Customers with Summary of Radioisotope Shipments, FY 1970	Ruth Curl, compiler	90
Patent Literature on Process Radiation and Irradiator Design, Part 1. U. S. Patents 1950 Through 1968	R. E. Greene, Helen S. Warren, and P. S. Baker	Draft sent to DID 12-11-70
Potato Sprout Inhibition by Radiation, Part 2	F. E. McKinney	20
Radioisotopes in the Steel Industry, Part 2	W. R. Pavlik, Republic Steel Corp. (F. E. McKinney, Ed.)	75
Selected Abstracts of World Literature on Production and Industrial Uses of Radioisotopes, Part 4	Martha Gerrard and P. S. Baker	10
Self-Diffusion in Liquids	F. J. Miller	75
Strontium-90	Roberta Shor, R. H. Lafferty, Jr., and P. S. Baker	Final Typing
Technetium-99m: Preparation and Uses	Martha Gerrard and P. S. Baker	50
Radioisotopes in the Textile Industry	F. J. Miller	90
Grain Disinfestation - A Worldwide Review	F. E. McKinney	20
AEC Participation in the Development of Wood-Plastic Composites	R. E. Greene	95
Permuted Isotopes and Radiation Technology Indexes (PIRTI) 1962-1969, Vols. 1-7	Helen Raaen, P. S. Baker, R. H. Lafferty, Jr., Ann S. Klein, and Linda P. Helton, Eds.	Ready for Reproduction
Presowing Irradiation of Seed	Russian book translated and edited by P. S. Baker and Martha Gerrard	Final Typing
Design and Application of X-Ray--Emission Analyzers Using Radioisotopic X- or Gamma-Ray Sources	J. R. Rhodes (Martha Gerrard and R. E. Greene, Eds.)	Typed for Reproduction

B. Isotopes and Radiation Technology

Galley proofing of Isotopes and Radiation Technology 8(3) and writing and editing of the manuscript for 8(4) were continued.

C. Publications

Martha Gerrard and P. S. Baker, Selected Abstracts of World Literature on Production and Industrial Uses of Radioisotopes, ORNL-IIC-30 (Pt. 3) (December 1970).

Martha Gerrard, Miniature ^{125}I X-Ray Source, Atomtechnikai Tajekoztato 1970(3): 200-202.

R. E. Greene, Extracts from a Report on Concrete--Polymer Materials, Atomtechnikai Tajekoztato 1970(3): 188-199.

F. E. McKinney, Measuring Moisture with Gamma Radiation, Atomtechnikai Tajekoztato 1970(3): 203-210.

J. Legrand, J. Morel, and C. Clement, Decay Schemes of ^{59}Fe and ^{192}Ir (in French), Nucl. Phys. A142: 63-71 (1970), ORNL-tr-2345, Martha Gerrard and J. J. Pinajian, translators.

RADIOISOTOPE APPLICATIONS DEVELOPMENT

SYSTEMS ENGINEERING APPLICATIONS - 08-03-02

A. Oceanographic Systems Study

Radionuclides appear to be useful tools to study sand transport phenomena and, although many experiments have been conducted to demonstrate their effectiveness as tracers, little is known concerning whether or not the dynamic systems in which they are used can be tagged well enough to achieve quantitative data leading to an understanding of basic mechanisms. The Radioisotope Sand Tracing (RIST) study has progressed through equipment development to the point where important system tagging parameters can be studied.

A meeting was held at the Coastal Engineering Research Center to discuss the next RIST experiment, which will be conducted at Masonboro, North Carolina. The purpose of the experiment is to obtain information concerning the transport of sand through and around the weir jetty which has been in operation at Masonboro for several years.

Treatment of data obtained at the last Point Mugu experiment is progressing, and a summary will be presented in the next report.

Work on the technical services unit has been confined to an in-depth investigation and selection of basic components that require minimum power. This is necessary since the unit will be operated on batteries. The incremental magnetic tape unit has been installed in the PDP/8I system and the software is 90% complete.

RADIOISOTOPE SALES

An order was received from U. S. Navy for approximately 424,000 Ci of strontium-90 to be encapsulated into sources as requested by Teledyne Isotopes.

Shipments made during the month that may be of interest are 2,000 Ci of cesium-137 to Atomic Energy of Canada Ltd., 20,000 Ci of cesium-137 and 12,500 Ci of tritium to Radiochemical Centre, England, 217,000 Ci of strontium-90 to U. S. Navy, 2,500 Ci of promethium-147 to Minnesota Mining and Manufacturing Company, and 612 Ci of promethium-147 to Technical University Munich, Germany.

Products prepared and shipped during December include 20,350 Ci of tritium, 156.5 Ci of krypton-85, 65.75 Ci of enriched krypton-85 (21.8%), and 207.36 Ci of xenon-133.

The radioisotope sales proceeds and shipments for the first five months of FY 1970 and FY 1971 are given in Table 8.

Table 8. Radioisotope Sales and Shipments

Item	7-1-69 thru 11-30-69	7-1-70 thru 11-30-70
Inventory items	$229,248	$175,532
Major products	48,773	52,015
Radioisotope services	71,951	139,995
Cyclotron irradiations	45,549	56,078
Miscellaneous processed materials	37,096	30,710
Packing and shipping	30,425	35,145
Total Radioisotope Sales	$463,042	$489,475
Total Radioisotope Shipments	1,011	1,334

ADMINISTRATIVE

Travel by IDC personnel and visitors to the IDC are given in Tables 9 and 10, respectively.

Table 9. Travel by IDC Personnel

Site Visited	Purpose of Visit
Washington, D. C.	Discussions concerning possible foreign assignment
Washington, D. C.	Sand tracing studies with Army Corps of Engineers
Los Alamos, N. M.	Meeting with LASL on helium release and radioisotope fuel forms

Table 10. Visitors to IDC

Affiliation	Purpose of Visit
NASA, Langley Field Hampton, Virginia	Run experiments with the ORNL 86-Inch Cyclotron
Furman University Greenville, S. C.	Conduct experiment on decay scheme of gallium-67
Vanderbilt University Nashville, Tennessee	Calculations for and writing of paper on gamma-gamma angular correlations work; decay scheme of Mössbauer isotope terbium-156.
Wisconsin State Univ. Stevens Point, Wisconsin	Write final draft of a paper

PUBLICATIONS

JOURNALS

D. C. Camp, J. C. Manthuruthil, A. V. Ramayya, J. H. Hamilton, and J. J. Pinajian, Decay of ^{206}Bi, Bull. Am. Phys. Soc. 15, 1649 (1970).

A. V. Ramayya, B. van Nooijen, J. W. Ford, D. Krmpotić, J. H. Hamilton, J. J. Pinajian, and N. R. Johnson, Energy Levels in ^{86}Sr from the Decay of 14.6-h ^{86}Y, Phys. Rev. C2, 2248-78 (1970).

A. V. Ramayya, B. van Nooijen, J. W. Ford, D. Krmpotić, J. H. Hamilton, J. J. Pinajian, and N. R. Johnson, Energy Levels in ^{86}Sr from the Decay of 14.6-h ^{86}Y, Phys. Rev. Abstracts 1 (No. 13), 13 (1970).

J. W. Ford, A. V. Ramayya, and J. J. Pinajian, The Decay of ^{151}Gd to the Levels of ^{151}Eu, Nucl. Phys. A146, 397-409 (1970).

REPORTS

R. W. Schaich, A Multipurpose Building for Processing Alpha, Beta, Gamma, and Neutron Emitters, ORNL-TM-3225, Oak Ridge National Laboratory (December 1970).

R. W. Schaich, Safety Analysis of Building 3028, ORNL-TM-3192, Oak Ridge National Laboratory (December 1970).

A. F. Rupp, Radioisotope Program (8000) Progress Report for November 1970, ORNL-TM-3254, Oak Ridge National Laboratory.

E. Lamb, IPF Monthly Status Report for November 1970, ORNL-CF-70-12-22, Oak Ridge National Laboratory.

TRANSLATIONS

Peter Knoll, The Technology of Isotope Production. Part I. Irradiation Technology, Rpt. ZFK-RCH-1 (December 1961), translated from German by J. J. Pinajian, ORNL-tr-2400.

Jürgen Lange and Helmut Münzel, Estimation of Unknown Excitation Functions for (α,xn)-, (α,pxn)-, (d,pxn)-, and (p,xn)-Reactions, Rpt. KFK-767 (May 1968), translated from German by J. J. Pinajian and Lynda H. Kern, ORNL-tr-3020.

INTERNAL DISTRIBUTION

1. A. L. Allen
2. M. A. Baker
3. P. S. Baker
4. E. E. Beauchamp
5. G. E. Boyd
6-8. T. A. Butler
9. F. N. Case
10. J. A. Cox
11. F. L. Culler
12. W. C. Davis
13. J. S. Drury
14. J. H. Gillette
15. H. R. Gwinn
16. R. F. Hibbs
17. K. E. Jamison
18. Lynda Kern
19. E. H. Kobisk
20. E. Lamb
21. R. E. Leuze
22. J. L. Liverman
23. L. O. Love
24. W. S. Lyon
25. R. E. McHenry
26. F. M. O'Hara
27. W. W. Parkinson
28. J. J. Pinajian
29. M. E. Ramsey
30. S. A. Reynolds
31-32. R. A. Robinson
33. D. A. Ross
34. A. F. Rupp
35. R. W. Schaich
36. A. H. Snell
37. K. A. Spainhour
38. M. R. Skidmore
39-40. H. F. Stringfield
41. D. B. Trauger
42. A. M. Weinberg
43. J. C. White
44-45. Central Research Library
46. Document Reference Section
47-51. Laboratory Records Department
52. Laboratory Records - RC

EXTERNAL DISTRIBUTION

53. G. A. Andrews, ORAU, Medical Division, Oak Ridge, Tennessee
54. Hal Atkins, Brookhaven National Laboratory, Upton, New York
55. D. S. Ballantine, AEC, Washington, D. C.
56-59. R. F. Barker, AEC, Washington, D. C.
60. N. F. Barr, AEC, Washington, D. C.
61. O. M. Bizzell, AEC, Washington, D. C.
62. C. R. Buchanan, AEC, Washington, D. C.
63. R. L. Butenhoff, AEC, Washington, D. C.
64. T. D. Chikalla, PNL, Richland, Washington
65. D. F. Cope, AEC Site Representative, ORNL
66. J. C. Dempsey, AEC, Washington, D. C.
67. W. K. Eister, AEC, Washington, D. C.
68. E. E. Fowler, AEC, Washington, D. C.
69. J. D. Goldstein, AEC, Washington, D. C.
70. A. Gottschalk, Argonne Cancer Research Hospital, Chicago, Illinois
71. F. D. Haines, AEC, Washington, D. C.
72-74. J. E. Hansen, PNL, Richland, Washington
75. J. W. Irvine, MIT (Consultant)
76. J. Lawrence, Lawrence Radiation Laboratory, Berkeley, California
77. J. E. Machurek, AEC, Washington, D. C.
78. J. N. Maddox, AEC, Washington, D. C.
79. J. C. Malaro, AEC, Washington, D. C.
80. W. E. Mott, AEC, Washington, D. C.
81. J. A. Powers, AEC, Washington, D. C.
82. G. J. Rotariu, AEC, Washington, D. C.

83. B. A. Ryan, AEC, Richland, Washington
84. W. D. Sandberg, AEC, Aiken, South Carolina
85. S. J. Seiken, AEC, Washington, D. C.
86. R. W. Shivers, AEC, Washington, D. C.
87. F. J. Skozen (Krizek), Argonne Cancer Research Hospital, Chicago
88. P. E. Smith, ARHCO, Richland, Washington
89. L. G. Stang, Jr., BNL, New York
90. G. Taplin, University of California, Los Angeles, California
91-96. D. H. Turno, SRL, Aiken, South Carolina
97. A. R. Van Dyken, AEC, Washington, D. C.
98. Laboratory and University Division
99-113. Division of Technical Information Extension