LOCKHEED MARTIN ENERGY RESEARCH LIBRARIES
3 4456 0513847 3

CENTRAL RESEARCH LIBRARY
DOCUMENT COLLECTION

OAK RIDGE NATIONAL LABORATORY
operated by
UNION CARBIDE CORPORATION • NUCLEAR DIVISION
for the
U.S. ATOMIC ENERGY COMMISSION

ORNL-TM-3380

cy. 44

RADIOISOTOPE PROGRAM (8000) PROGRESS REPORT FOR MARCH 1971

A. F. Rupp

OAK RIDGE NATIONAL LABORATORY
CENTRAL RESEARCH LIBRARY
DOCUMENT COLLECTION
LIBRARY LOAN COPY
DO NOT TRANSFER TO ANOTHER PERSON
If you wish someone else to see this document, send in name with document and the library will arrange a loan.

NOTICE This document contains information of a preliminary nature and was prepared primarily for internal use at the Oak Ridge National Laboratory. It is subject to revision or correction and therefore does not represent a final report.

This report was prepared as an account of work sponsored by the United States Government. Neither the United States nor the United States Atomic Energy Commission, nor any of their employees, nor any of their contractors, subcontractors, or their employees, makes any warranty, express or implied, or assumes any legal liability or responsibility for the accuracy, completeness or usefulness of any information, apparatus, product or process disclosed, or represents that its use would not infringe privately owned rights.

ORNL-TM-3380

Contract No. W-7405-eng-26

Isotopes Development Center

RADIOISOTOPE PROGRAM (8000) PROGRESS REPORT FOR MARCH 1971

A. F. Rupp

Work Sponsored by
AEC Division of Isotopes Development

APRIL 1971

OAK RIDGE NATIONAL LABORATORY
Oak Ridge, Tennessee
operated by
UNION CARBIDE CORPORATION
for the
U.S. ATOMIC ENERGY COMMISSION

LOCKHEED MARTIN ENERGY RESEARCH LIBRARIES

3 4456 0513847 3

CONTENTS

Page

RADIOISOTOPE PRODUCTION AND MATERIALS DEVELOPMENT

REACTOR-PRODUCED ISOTOPES - 08-01-01 1

A. Biomedical Radioisotopes 1

1. Phosphorus-33 1
2. Potassium-43 2

B. Exploratory Development of Products and Techniques 3

1. Gadolinium-153 3

C. Isotopic Power 4

1. Thulium-170 4

D. Reactor Products Pilot Production 5

E. Source Fabrication 5

1. Nickel-63 5

ACCELERATOR-PRODUCED ISOTOPES - 08-01-02 6

A. Biomedical Radioisotopes 6

1. Indium-111 6
2. Gallium-67 7
3. Rubidium-84 9

B. Accelerator Pilot Production 9

FISSION PRODUCTS - 08-01-03 9

A. Krypton-85 Enrichment 9

B. Cesium-137 Gamma Source Development 10

1. Cesium Source Form Development 10

C. Cesium-137 Pilot Production 14

1. Processing and Process Status 14
2. Operational Summary 14
3. Current Orders 15

Page

D. Strontium-90 Pilot Production 15

1. Processing and Process Status 15
2. Operational Summary 16
3. Current Orders 17

E. Strontium Pellet Vacuum Hot Press 17

F. Strontium-90 Silicate Beta Sources 19

1. Characterization 19

G. Promethium-147 Source Fabrication, Powder Shipments, and Current Orders 19

H. Short-Lived Fission Products Pilot Production 19

I. Source Development 20

1. Strontium-89 20
2. Technetium-99 20

APPLICATIONS AND TECHNOLOGY SUPPORT - 08-01-04 20

A. Radioisotope Characterization, Quality Control, and Standards 20

1. Radioisotope Characterization 20
2. Radioisotope Special Analysis and Quality Control . . . 20

B. Low-Energy Gamma and Secondary X-Ray Sources 21

1. Development of Sources for Determination of Lead in Aqueous Solutions by Fluorescence X-Ray Analysis . . 21

C. Radiation Processing 22

1. Radiolytic Oxidation of Dye Waste Solution 22

D. Radioisotope Safety 23

1. Sources Involved in a Fire 23
2. Source Classification Testing 23
3. Tritium Foils 24

TECHNOLOGY UTILIZATION - 08-01-05 26

A. Information Center 26

B. Isotopes and Radiation Technology 26

C. Publications 26

Page

RADIOISOTOPE SALES 27

ADMINISTRATIVE 27

PUBLICATIONS 29

Journals 29

Reports 29

Translations 29

RADIOISOTOPE PROGRAM (8000) PROGRESS REPORT FOR MARCH 1971

A. F. Rupp

RADIOISOTOPE PRODUCTION AND MATERIALS DEVELOPMENT

REACTOR-PRODUCED ISOTOPES - 08-01-01

A. Biomedical Radioisotopes

1. Phosphorus-33

The purpose of this project is to develop methods of preparing hundred-millicurie quantities of carrier-free phosphorus-33 containing $\leq$5% phosphorus-32. The two methods of producing phosphorus-33 being evaluated are based on the irradiation of highly enriched targets of sulfur-33 (>92 at. %) or chlorine-36 (approximately 63 at. %), in a fast neutron flux. Phosphorus-33 (25.2 days; 0.248-MeV β^-_{max}) has both a longer half-life and a lower energy beta than phosphorus-32 (14.3 days; 1.709-MeV β^-_{max}), which makes it advantageous for autoradiography, longer ecological and agricultural experiments than with phosphorus-32, synthesis of tagged complex organo-phosphorus compounds, and double labeling experiments.

An enriched (>90%) $K_2{}^{33}SO_4$ target containing 0.82 g that was irradiated for 6 months was processed. It yielded 530 mCi of phosphorus-33 containing 4% phosphorus-32, as expected. In processing this target by the usual $Fe(OH)_3$ carrier precipitations, the major portion of the iron was removed by MIBK (methyl isobutyl ketone) extraction prior to a final cation column cleanup. It was discovered that the minute trace of antimony-124 activity, which usually is leached from the quartz ampule and passes through the cation column as anionic species to remain in the final product, was extracted simultaneously with the iron into the organic phase. Although the iron could be removed by a cation column alone, it is desirable to include the MIBK extraction for concomitant removal of antimony activity. The final product contained chromium-51 as the only detected gamma activity, and it was <1 μCi/ml and well within our specification. The $K_2{}^{33}SO_4$ target contains traces of chromate which carry on the $Fe(OH)_3$, but the level of contaminant activity in the product is not a problem and appears to be decreasing with re-use of the target. The phosphorus-33 product was analyzed by spark source mass spectrometry for elemental content. The elements detected and the amounts are shown below:

Element	Amount (μg/ml)	Element	Amount (μg/ml)
Aluminum	1	Potassium	0.5
Boron	0.2	Magnesium	1
Barium	0.5	Sodium	10
Calcium	2	Nickel	5
Cobalt	0.05	Phosphorus-31	0.3
Chromium	0.2	Lead	0.3
Copper	0.09	Silicon	9
Iron	0.7	Zinc	0.7
		Sulfur	50

One $K^{36}Cl$ target was removed from the reactor and replaced by another. The target removed will be processed; a yield of approximately 1 Ci of phosphorus-33 is expected.

2. Potassium-43

The objectives of this project are: to prepare potassium-43 by the $^{43}Ca(n,p)^{43}K$ reaction, using isotopically enriched ^{43}CaO targets, in quantities sufficient for medical and biological experiments; to define a method for separating potassium-43 from the target in a purity suitable for medical use; and to establish cooperative programs with medical institutions interested in evaluating its usefulness. Potassium-43 with a half-life of 22.4 hr and gamma-ray emissions of 0.373 and 0.617 MeV, is potentially useful for metabolic and clinical studies of blood flow, rejection of transplanted organs, and kidney function because the dose rate would permit multiple doses.

One batch of potassium-43 was made; data are summarized in Table 1.

Table 1. Yield of Potassium-43 from Calcium-43 Target

	Target 331
Weight ^{43}CaO (~50%),[a] mg	141.7
Irradiation time, hr	65
Product delivery date	3/9/71
Total product at 8:00 AM on delivery date, mCi	
Potassium-43	8.78
Potassium-42	1.1 (12.5%)

[a]Recovered February 1971. Isotopic analysis: ^{40}Ca, 21.9 at. %; ^{41}Ca, <0.001 at. %; ^{42}Ca, 8.31 at. %; ^{43}Ca, 50.7 at. %; ^{44}Ca, 19.0 at. %; ^{45}Ca, ≤0.01 at. %; ^{46}Ca, <0.001 at. %; and ^{48}Ca, 0.057 at. %.

Shipments were made under medical cooperative programs to Johns Hopkins Medical Institution, Peter Bent Brigham Hospital, V. A. Hospital (Durham, North Carolina), University Hospitals of Cleveland, and University of Mississippi Medical Center.

B. Exploratory Development of Products and Techniques

1. Gadolinium-153

Gadolinium-153 (241 days) is an important radionuclide because it decays by electron capture to yield predominantly 100-keV photons. This energy range is useful in backscatter and transmission gaging, as well as having applications in other fields. Highly enriched transmutation product gadolinium-152 is prepared by chemically separating it from neutron burned-out europium control plates from HFIR. The >90% abundant gadolinium-152 is not available from calutron separations and can only be obtained at reasonable cost as a by-product of the HFIR reactor operations at the present time.

Samples from a cyclindrical HFIR control plate were analyzed for gadolinium. Samples were obtained from points at various distances from the high burnup region, and the analytical results on these samples are shown in Tables 2 and 3.

Table 2. Gadolinium and Europium Content in Regions of Varying Burnup

Inches From High Burnup Region	Amount (wt %)	
	Europium	Gadolinium
0.5	89.5	10.5
2.0	93.5	6.5
5.0	94.1	5.9
10.0	98.2	1.8

Table 3. Isotopic Composition of Gadolinium in Regions of Varying Burnup

Inches From High Burnup Region	Gadolinium Isotopic Composition (%)						
	152	154	155	156	157	158	160
0.5	23.5	15.9	1.8	57.1	0.02	1.5	0.01
2.0	44.0	16.1	1.9	36.9	0.03	0.7	0.02
5.0	77.0	12.8	1.6	8.2	0.01	0.1	0.04
10.0	62.0	9.7	0.9	26.3	0.08	0.8	0.10

Tedious chemistry is required to separate gadolinium from europium; therefore, material 5 in. from the high burnup region is selected for gadolinium-152 recovery to give the highest yield of good target material per unit of processing cost. The gadolinium-152 isotopic abundance is high and the ratio, Gd/Eu, is maximum, 0.0455 g gadolinium per gram of europium. Approximately two grams of gadolinium has been separated from europium that was about 1 in. from the high burnup region that assayed approximately 25% gadolinium-152. This material is being repurified and will be converted to the target form, Gd_2O_3.

Several gadolinium-153 sources have been fabricated and shipped to users. Some of these sources and their applications are shown below.

User	Gadolinium-153 Source (mCi)	Application
Vanderbilt University	3000	Excitation of secondary x rays
Vanderbilt University	30	Lung scanning
Vanderbilt University	100	Lung scanning
General Motors	300	Radiography
Baptist Hospital, Knoxville	20	Lung scanning
Oak Ridge Associated Universities	200	Heart studies
UCC-Y-12 Plant, Oak Ridge (several sources)	1000	Gaging
University of Wisconsin	300	Bone density
Conrac Corporation	5000	Density probe

C. Isotopic Power

1. Thulium-170

The objectives of this research are to provide sufficient data on thulium-170 to permit assessment of its potential application as an isotopic power source for short-duration missions.

The Tm_2O_3 powders, originally introduced into the Knudsen cell to obtain weight-loss data, sintered into a pellet at the conclusion of two 48-hr runs, the first one at 1740°C and the second at 2000°C. Upon examination of the pellet at 100X magnification, some "shiny" particles were found on the surfaces of the pellet. These shiny particles on the top surface facing the orifice of the Knudsen cell have been tentatively identified by the electron microprobe as tantalum mixed with thulium, while those on the side surfaces in contact with the cell walls were shown to be a mixture of tungsten and thulium. The presence of tantalum particles on the Tm_2O_3 pellet surface is the result of vapor transport from the tantalum heating element in the furnace. The surfaces of the Knudsen cell are presumably also covered with tantalum deposits. This explains why the Knudsen cell containing Tm_2O_3 gained weight during the runs at both 1740°C and 2000°C (13.3 mg and 27.9 mg, respectively, for 48-hr runs).

To establish correlations for correcting the observed weighing data, experiments are in progress with the empty Knudsen cell in the high vacuum furnace at various temperatures. The tantalum heating elements were replaced by tungsten mesh elements, since vapor pressure of the former is estimated to be approximately ten times that of the latter. The result of the three 48-hr runs at 1740°C indicates that there is a net weight loss of the Knudsen cell when the tungsten mesh heating elements are used. Although the rate of weight loss has not reached a constant value as yet, it appears to be in the order of approximately 5×10^{-4} mg/min.

Two Tm_2O_3-Yb_2O_3 mixtures (17 wt % Yb_2O_3 and 28 wt % Yb_2O_3) have been prepared by the coprecipitation method. The individual compounds Tm_2O_3 and Yb_2O_3 were first dissolved in 2 *N* HNO_3 by heating to near the boiling point. After dissolution was completed, the pH of the solution was adjusted with $(NH_4)_2CO_3$ to approximately 4. Oxalic acid in slight excess of the stoichiometric quantity was then added to precipitate thulium-ytterbium oxalates, and the precipitates were calcined at ~800°C to convert to a mixture of Tm_2O_3-Yb_2O_3.

Experiments to obtain vapor pressure data, as well as correction factors for the observed weighing data, will be continued with a newly installed high vacuum furnace.

D. Reactor Products Pilot Production (Production and Inventory Accounts)

Processed Units		Service Irradiations	
Radioisotope	Amount (mCi)	Type	Number
Calcium-47	8	Platinum-196	1
Palladium-109	1060		
Copper-67	14		

E. Source Fabrication

1. Nickel-63

Laboratory techniques are being developed to provide a nickel-63 sample that can be incorporated in stainless steel welding rod. The purpose of the project is to develop a means, using a radioactive tracer, to assess defects in welds made on capsules containing chemical munitions. It is anticipated that other isotopes in addition to nickel-63 will be used.

An additional sample of nickel-63 was prepared for use in nickel alloy preparation by the Metals and Ceramics Division. Two lengths of nickel wire (12 in. long by 0.020 in. diam) were plated with 2 mg and 1 mg, respectively, of nickel-63 using a saturated ammonium oxalate bath and a 0.05-A current for one hour. Each wire was then plated with 30 mg of inactive nickel in a solution containing 65% by volume concentrated ammonium hydroxide and 35% by volume 0.35 *M* ammonium sulfate by using a current of 0.05 A for one hour.

ACCELERATOR-PRODUCED ISOTOPES - 08-01-02

A. Biomedical Radioisotopes

1. Indium-111

The objectives of this program have been to define and optimize the pertinent production parameters for the economical production of indium-111 of satisfactory quality for radiopharmaceutical manufacture. The current objectives are to obtain practical operating experience of the procedures developed by pilot production and to provide this radionuclide to interested customers as a special research material — in batch lots — for their evaluation. Indium-111 has been suggested for such studies as spinal-cerebral cisternography, aerosol lung studies, delayed brain scanning, visualization of the lymphatic system, metabolic studies of indium-labeled macroaggregates and colloids, and tumor localization. Indium-111 has gamma emissions of 173 keV (89%) and 247 keV (94%) ideally suited for external detection and an optimal half-life (2.81 days) for labeling and distribution studies which must be carried out over 24 hr or longer.

Two batches of indium-111 (approximately 178 mCi total at end of 1-day decay allowance) were prepared, and portions of the batches were supplied to interested clinicians as a special research material. The production rates fell within the range determined during the initial development stage of this material.[1]

A summary of the accumulated production experience obtained since the beginning of batch-lot production of this radionuclide is shown in Table 4. The ^{111}CdO target (96.5% isotopically enriched) was contained in a 0.060- by 1.25-in. plugged capsule void and irradiated with 22-MeV protons as described earlier. The proton energy at the surface of the target material was estimated to be 16 MeV. All processing was performed using the isopropyl ether-6 *M* HBr extraction system described previously.

Table 4. ORNL ^{111}Cd(p,n)^{111}In Production Experience for the Second and Third Quarters of FY 1971

Run No.	Target Weight[a] (mg)	Average Beam Current (μA)	Innage (hr)	Integrated Beam (μA-hr)	^{111}In Cyclotron Yield[b] (mCi)	^{111}In Production Rate[b] (mCi/mA-hr)	Quantity Shipped[c] (mCi)	Chemical Yield (%)
In-111-16	453	182	2.5	456	218	478	105	91
In-111-17	483	185	3.25	602	297	493	139	91
In-111-18	617	186	2.83	525	255	485	120	92
In-111-19	571	183	2.5	457	97[d]	212[d]	55[d]	94
In-111-20	642	187	1.5	281	122	435	53	96
In-111-21	704	185	3.25	600	319	532	125	92

[a]Target material consisted of 96.5% isotopically enriched ^{111}CdO.
[b]Values calculated as of end of bombardment.
[c]Time reference: 8:00 AM on day after shipment.
[d]Production values low due to cyclotron operating difficulties.

[1]A. F. Rupp, *Radioisotope Program (8000) Progress Report for October 1970*, ORNL-TM-3183, Oak Ridge National Laboratory, p. 6.

The limits of detection of the chemical spot test used for Cd^{2+} quality control have been improved and can now be used routinely to detect less than 5 μg Cd^{2+} per ml. The product specifications will be maintained at the present ≤ 20 μg Cd^{2+} per ml level until additional operating experience has been obtained and the product has been shown to routinely meet these tighter limits.

2. Gallium-67

The objectives of this program are to determine the optimal target configuration for gallium-67 (78.2 hr) production by the $^{68}Zn(p,2n)^{67}Ga$ reaction in acceptable purity and quantity and to provide gallium-67 for clinical applications research and development. Interest in this isotope has been spurred by evidence, obtained by the Medical Division of Oak Ridge Associated Universities (ORAU), of a high uptake of carrier-free gallium-67 by lymphoid tumors in both animals and humans.

Gallium-67 decays by electron capture with the emission of four main gamma rays of 93, 184, 296, and 388 keV with intensities of 40, 23, 20, and 8%, respectively.

Weekly production of gallium-67 has been continued with four gallium-67 preparations being prepared and shipped to ORAU and 18 additional orders totaling approximately 60 mCi/week being filled for other customers. Additional development work on reliable, large-scale production targets has begun. Three different approaches are under investigation: (1) optimization of irradiation conditions for the present pure zinc tube target, (2) fabrication and testing of a Zn-Ni alloy tube of similar design, but with a higher melting point, and (3) development of a 100% zinc flat plate target. A preliminary experiment employing a zinc flat plate fabricated to the same dimensions as the standard copper flat plate showed signs of extensive melting in the beam area when irradiated at a proton beam current and energy of approximately 400 μA and 22 MeV, respectively. Additional work will be done next month to improve the heat removal capacity of this target design.

In our review of the "Production and Medical Uses of ^{67}Ga, ^{68}Ga, and ^{72}Ga" (ref. 2) we listed, among other things, decay scheme information on the radioisotopes of gallium; for gallium-67

Half-life	Mode of Decay	γ (MeV)	
77.9 hr	ε (<0.01% β^+)	0.090 (2.7%)	0.388 (4.9%)
		0.092 (63.9%)	0.496 (0.4%)
		0.182 (29.6%)	0.790 (0.2%)
		0.206 (1.07%)	0.880 (0.4%)
		0.296 (20%)	

[2] J. J. Pinajian, *Isotopes and Radiation Technology* 1, 343 (Summer 1964).

Although there has been considerable increase in interest in gallium-67 [cf. A. F. Rupp, *Radioisotope Program (8000) Progress Reports*], there has been no updating of the decay scheme. The beta feeding of the excited levels of zinc-67, which subsequently de-excite by gamma-ray emission, is still calculated from the log ft values and is not a direct measurement; therefore, it is subject to large errors (e.g., a factor of 10). Indeed there has not been a recent comprehensive look at the gamma-ray emission from the decay of gallium-67 to excited levels in zinc-67.

Because of our interest in preparing trace metals for metabolisms studies we have, in collaboration with the Nuclear Data Group, looked at the low-energy gamma rays from zinc-67 fed by the β^- decay of 6.17-hr copper-67.[3] This copper-67 investigation supports the gallium-67 work in establishing accurate values for these gamma rays.

Preliminary results of the examination of gallium-67 give the following values:

E_γ (keV)	I_γ (Relative Values)
91.268 ± 30	199 ± 10
93.315 ± 30	2360 ± 120
184.567 ± 20	1480 ± 70
208.966 ± 20	146 ± 7
300.232 ± 25	1000. ±
393.502 ± 20	280 ± 14
494.158 ± 20	4.0 ± 0.3
703.112 ± 50	0.7 ± 0.1
794.359 ± 50	3.1 ± 0.2
887.683 ± 40	8.7 ± 0.6

Figure 1 shows the decay scheme of gallium-67 thus far. For clarification we have included a portion of the decay scheme of 61.7-hr copper-67.

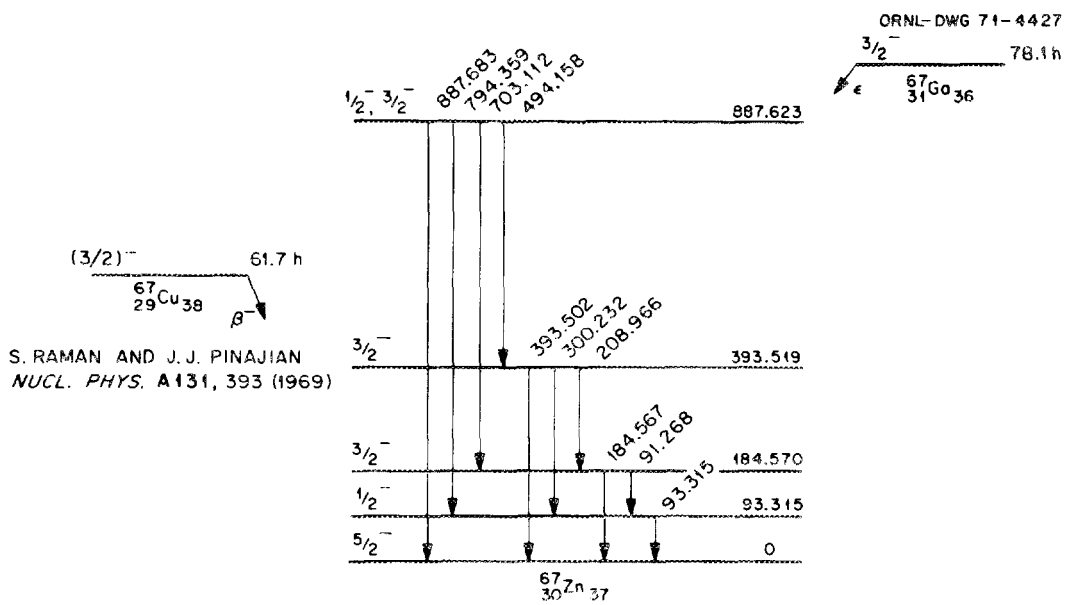

Fig. 1. Decay Scheme of Gallium-67.

[3] S. Raman and J. J. Pinajian, *Nucl. Phys.* A131, 393-97 (1969).

In the coming period we expect to produce the 19-min germanium-67 precursor to gallium-67 by the $^{64}Zn(\alpha,n)^{67}Ge$ reaction. Since alpha particles are not available to us, we expect to perform this experiment in collaboration with the Physics Department of the University of Maryland.

3. Rubidium-84

The objectives of this program are to improve the technology for the production of higher purity rubidium-84 by use of an enriched krypton-84 target. Rubidium-84 is usually produced by proton bombardment of natural krypton targets, but this product is unsuitable for positron camera scanning due to appreciable amounts of rubidium-83 produced simultaneously. The use of rubidium-84 for myocardial scanning with a positron camera has increased the demand for a higher purity product.

Two rubidium-84 production runs using an enriched krypton-84 target were made, and the products were supplied to customers.

B. Accelerator Pilot Production (Production and Inventory Accounts)

Table 5. Cyclotron Irradiations and Runs for March 1971

Product	No. of Runs	Time (hr:min) Beam	Misc	Total	Total Charges
		ORNL Programs			
Gallium-67	3	5:00	3:30	8:30	$ 942.80
Indium-111	2	4:45	2:15	7:00	727.80
Cobalt-56	1	4:00	1:05	5:05	599.81
Total		13:45	6:50	20:35	$2,270.41
		Non-ORNL Programs			
Yttrium-87	2	5:00	2:30	7:30	$1,170.20
Rubidium-84	1	6:00	1:15	7:15	1,724.99
Germanium-68	1	8:00	1:15	9:15	1,532.59
Total		19:00	5:00	24:00	$4,427.78

FISSION PRODUCTS - 08-01-03

A. Krypton-85 Enrichment

No gas transfers were made in any of the units (see Fig. 2) this month.

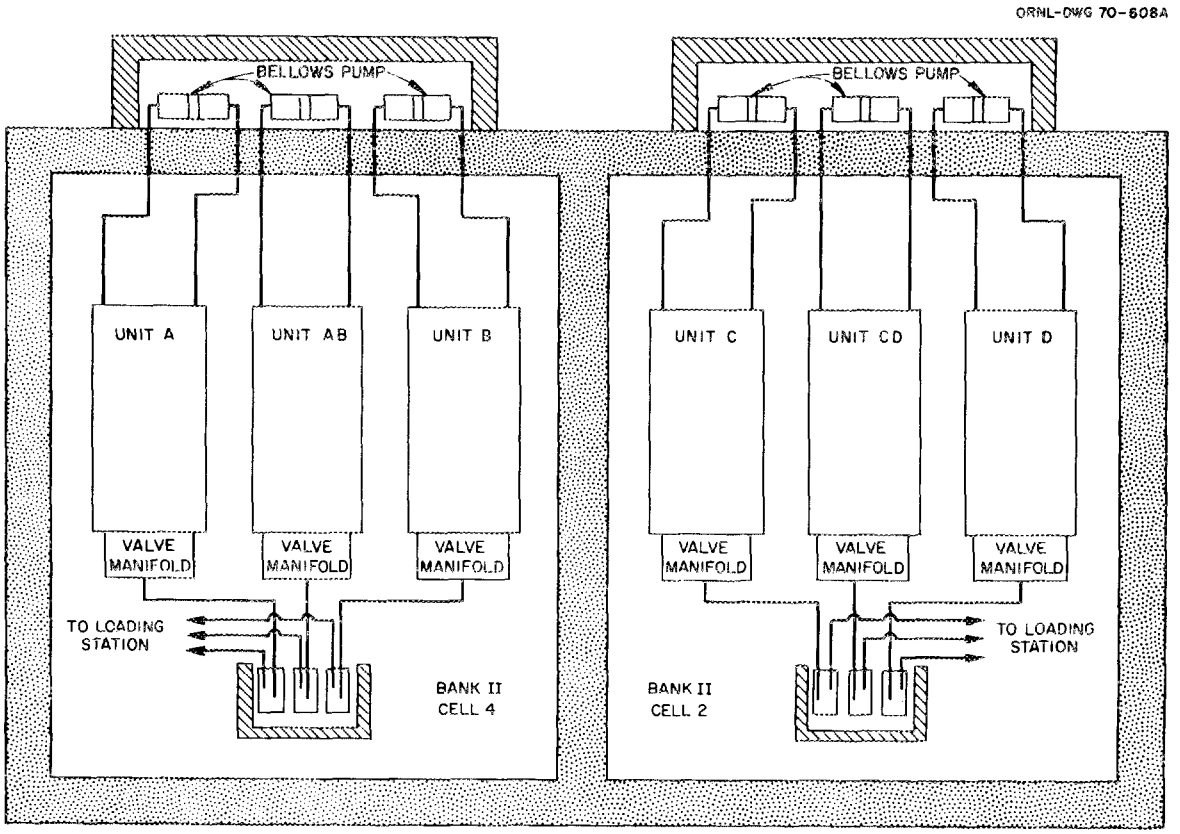

Fig. 2. Schematic Arrangement of Krypton-85 Columns.

Unit	Activity in Unit (Ci)	Time Since Last Product Removal (days)	Count Rate in Product Section (counts/min) Feb 1971	Mar 1971
A	—	314	—	—
AB	1537	190	12,600	12,600
B	1406	190	10,850	10,800
C	1622	80	5,050	6,650
CD	2565	330	13,900	16,100
D	1470	80	5,350	6,400

B. Cesium-137 Gamma Source Development

1. Cesium Source Form Development

Cesium-137 chloride has been the compound of choice for radiation sources in applications of moderate temperature conditions. In many respects cesium chloride is the ideal compound; the cesium weight per unit volume is high, the radiation resistance of the CsCl is excellent, the compatibility with stainless steel at ambient temperatures is excellent, and its preparation

is straightforward. However, the projected conditions of use of cesium-137 gamma sources are increasingly severe with respect to temperature, and some applications indicate the need for a cesium source material which has low solubility. In view of these projected conditions of use, the testing of $^{137}CsCl$ at elevated temperatures is being done and the development of a low solubility, temperature resistant source form of cesium is being studied.

a. Alternative Cesium-137 Source Form Development

Recently found in the literature was a paper[4] presenting the phase diagram for the system Cs_2O-Nb_2O_5 that shows phase transitions of cesium niobates having various mole ratios of Nb/Cs. Data pertinent to the range of Nb/Cs ratios encountered in the present project are summarized in Table 6. Although there are some uncertainties in regard to their experimental technique Table 6 indicates that all types of cesium niobates of interest undergo solid phase transition. Except for the compound with the Nb/Cs ratio of 2.6, these compounds melt incongruently. Both temperatures of solid phase transition and melting increase with increasing Nb/Cs ratio. Thus despite the relatively high volumetric specific activity of $CsNbO_3$ (74.4 Ci/cm^3), cesium niobate with the Nb/Cs ratio of 2 may be a better cesium-137 source compound than $CsNbO_3$ from the standpoint of combining the high temperature stability with a fairly good cesium volumetric specific activity, 57.5 Ci/cm^3 (as compared with 100.4 Ci/cm^3 for CsCl).[5]

Table 6. Phase Transitions in the System Cs_2O-Nb_2O_5

Nb/Cs Mole Ratio	Solid Phase Transition Temperature (°C)	Melting Temperature (°C)
1	748	857 (Incongruent)
1.5	857	972 (Incongruent)
2	972	1153 (Incongruent)
2.6	1153, 1372	1416 (Congruent)

Preparation of cesium tantalates has been carried out by the aqueous $CsOH$-Ta_2O_5 slurry reaction at boiling point under reflux. One of the possible reaction mechanisms may be represented by:

$$Ta_2O_5 + xH_2O \rightarrow Ta_2O_5 \cdot xH_2O \rightarrow H_2Ta_2O_6 \cdot (x-1)H_2O$$

$$H_2Ta_2O_6 \cdot (x-1)H_2O + 2CsOH \rightarrow 2CsTaO_3\downarrow + (x+1)H_2O \ .$$

[4]A. Reisman and J. Mineo, *J. Phys. Chem.* 65, 996-8 (1961).
[5]A. F. Rupp, *Radioisotope Program (8000) Progress Report for January 1971*, ORNL-TM-3310, Oak Ridge National Laboratory, p. 8.

The reaction mixture from the slurry reaction was then gradually heated until it became completely dry. This was followed by calcination of the dry product at 750°C either in a muffle furnace or in a nitrogen-filled furnace.

The material balance calculations show the weight losses through the calcination step to be slight (up to ∿4% in the muffle furnace, excluding H_2O losses). Calcination of the dry product in a nitrogen atmosphere resulted in even smaller losses (up to ∿2.6%). Although the results of chemical analysis and the solubility study are still incomplete, the preliminary data reveal that as in the case of cesium niobates the stability of cesium tantalates in an aqueous solution increases with an extended reaction time [up to ∿90% of the calcined product (pulverized) was insoluble in sea water]. According to the x-ray diffraction data, no detectable amounts of reactants (Ta_2O_5, CsOH, Cs_2O, etc.) are present in the calcined product, presumably implying that the reaction was practically complete.

b. Improvement and Characterization of ^{137}CsCl Source Form

The study on thermal expansion characteristics of the CsCl-KCl mixture was extended to one additional composition, 3.2 wt % (or 7 mole %) KCl-CsCl, following the procedure described previously.[6] This composition is to simulate the expected ^{137}CsCl product from the Hanford Waste Management Program (HWMP) (which will contain about 2-5% impurities) assuming that KCl is one of the major impurities. The highlights of the result computed from the dilatometer data are summarized in Table 7 for all the samples studied thus far. Both heating and cooling data near the solid-phase transition are included.

Table 7 demonstrates that pure CsCl exhibits a sudden change in the temperature rate of linear expansion when heated from 450-500°C. On cooling, the equivalent shift takes place in the temperature range of 450-400°C. Such changes in the thermal expansion characteristics are obviously caused by the solid phase transformation as evidenced by the DTA thermogram.

For the 0.9 wt % (or 2 mole %) KCl-CsCl mixture (mechanical), the sudden jump in the linear expansion takes place also between 450-500°C (except for Run 1). Cooling of the same mixture resulted in a relatively mild shift in the percent expansion in the 300-400°C range. The behavior of the 0.9 wt % KCl-CsCl molten mixture was similar to the one above during heating. However, a rapid change in expansion is seen as the mixture cools from 250 to 200°C which represents the range in which a solid phase transition peak appears in the DTA thermogram on cooling.

When the KCl content is increased to 3.2 wt % (or 7 mole %), the temperature range of rapid expansion in the heating process shifts to 450-525°C (mechanical mixture). With the molten mixture, this range further changes to 400-450°C. The temperature rate of expansion of the same mixture in the cooling step appears to be quite uniform. However, there was a tendency for the pellet of this mixture (molten, 3.2 wt % KCl) to contract rather than expand in the heating step in certain temperature ranges.

---

[6] A. F. Rupp, *Radioisotope Program (8000) Progress Report for February 1971*, ORNL-TM-3341, Oak Ridge National Laboratory, pp. 15-16.

Table 7. Thermal Expansion Characteristics of CsCl and KCl-CsCl Mixtures (Summary)

Run No.	Linear Expansion[a] (% of starting length[b]) On Heating To:			On Cooling To:			Residual Expansion at Room Temp.[c]
	Pure CsCl						
	450°C	500°C	550°C	450°C	400°C	350°C	
1[d]	2.48	7.42	12.02	11.62	10.61	9.76	9.50
2	1.44	4.02	4.88	4.76	3.81	3.61	3.12
3	1.32	2.85	4.20	3.60	2.05	1.65	f
	0.9 Wt % KCl-CsCl (Mechanical Mixture)						
	450°C	500°C	550°C	400°C	350°C	300°C	
1[d]	2.84	3.46	6.56	e	e	9.30	8.68
2	1.66	5.53	5.63	4.35	3.38	2.90	1.46
3	1.80	3.05	3.80	3.16	2.70	2.43	1.53
	0.9 Wt % KCl-CsCl (Molten)						
	400°C	450°C	500°C	300°C	250°C	200°C	
1[d]	3.34	5.03	9.02	7.89	7.14	5.08	5.38
2	1.14	1.69	4.42	3.10	2.42	0.78	1.23
3	1.20	1.83	4.58	2.94	2.68	0.96	0.77
	3.2 Wt % KCl-CsCl (Mechanical Mixture)						
	400°C	450°C	525°C	300°C	250°C	200°C	
1[d]	2.26	3.37	11.56	11.56	10.82	8.64	9.10
2	1.64	2.50	5.75	4.49	4.02	2.46	1.78
3	1.42	2.54	4.83	3.33	3.00	1.75	1.25
	3.2 Wt % KCl-CsCl (Molten)						
	350°C	400°C	450°C	400°C	350°C	300°C	
1[d]	5.54	7.31	10.76	9.13	8.93	8.74	10.12
2	-0.31	0.22	1.70	-0.09	-0.27	-0.47	f

[a]Measurement made upon heating or cooling to the temperature indicated.
[b]Length at the start of each run.
[c]Expansion retained at the conclusion of each run.
[d]One run represents one heating-cooling cycle.
[e]Out of scale.
[f]Pellet deformed; no measurement made.

One phenomenon that is common to all the samples listed in Table 7 is the trend for the pellet to retain more than 10% of the expansion at room temperature after two heating-cooling cycles (except the molten 0.9 wt % KCl-CsCl). Such a phenomenon implies that if a ^{137}CsCl source should be subjected to repeated heating-cooling cycles through approximately 550°C, the amount of expansion retained by the source may develop appreciable stresses on the source capsule. This condition could contribute to the deformation of the capsule such as that reported by Bradley and Ottinger.[7]

C. Cesium-137 Pilot Production (Production and Inventory Accounts)

1. Processing and Process Status

A fraction of ∿100,000 Ci of ^{137}CsCl was removed from storage, redried, and sampled in preparation for canning it for shipment. This represents the second half of an order from the CEA (France) for 200,000 Ci of bulk ^{137}CsCl. The HAPO-1C cask was tested, decontaminated, and shipped back to Atlantic Richfield Hanford Company.

During transfer of some concentrated cesium-137 solutions, a leak occurred in an in-cell transfer line. Approximately 40,000 Ci (about 20% of the material being transferred) was picked up in the waste retention tanks. The plant was designed to take care of just such a mishap as this. The recovered liquid was transferred to storage tanks for reprocessing. In order to locate the leak, it was necessary to return all cesium-137 solutions from the process system to feed storage tanks. The exact location of the leak has not yet been determined; therefore, the extent of the decontamination necessary before repairs can be made is unknown.

The current process status for cesium-137 is as follows:

Item	Cesium-137 (Ci)
In-process material	559,000
^{137}CsCl products	18,900
Sources in fabrication	100,000
Completed sources awaiting shipment	148,300

2. Operational Summary

	March 1971		FY 1971	
Item	Number	Amount (Ci)	Number	Amount (Ci)
HAPO shipments received	0	0	1	388,200
Product batches prepared	0	0	0	0
Sources fabricated	0	0	62	43,400
Special form containers loaded	0	0	17	198,800
Sources shipped	0	0	283	163,300
Special form containers shipped	0	0	12	98,000

[7]N. C. Bradley and C. L. Ottinger, *Investigation of Deformation in Rectangular Cesium-137 Sources*, ORNL-TM-3069, Oak Ridge National Laboratory (August 1970).

3. Current Orders

Current orders for cesium-137 as sources or bulk powder are shown below:

Customer	Amount (Ci)	Estimated Shipping Date
J. L. Shephard and Associates	1,350	April 1971
Atomic Energy of Canada, Ltd.	1,500	April 1971
CEA, France[a]	200,001	June 1971
American Hoechst Corporation	5	June 1971
Brookhaven National Laboratory	203,000	July 1971
Lockheed-Georgia Company[b]	~35,000	June 1971
Total	440,856	

[a]101,584 Ci of this order is presently awaiting a boat booking through Transnuclaire, Inc.

[b]The cesium-137 activity to be supplied by Lockheed-Georgia Company.

Orders on hand for cesium-137 as bulk powder or sources to be scheduled and shipped as released by the customer include Atomic Energy of Canada, approximately 154,300 Ci, and Radiation Resources, Inc., 200,001 Ci. Cesium sources containing 40,000 Ci are on hand awaiting receipt of shipping instructions.

D. Strontium-90 Pilot Production (Production and Inventory Accounts)

1. Processing and Process Status

Three batches of $^{90}Sr_2TiO_4$ with a total yield of approximately 75,000 Ci were run. Difficulties with the in-cell repair of the vacuum hot press led to a decision to delay this repair and install an induction-heated hot press in another cell. Decontamination of the cell and installation of the hot press were done; then pelletization was resumed. A double-wall graphite die was used, with the outer layer made of spun graphite filaments and the inner sleeve of solid graphite. Eleven 7.0-cm-diam pellets were pressed on this unit, one of them a re-pressing of a broken pellet. Pellet data are listed below.

Pellet	Power (W)	Density (g/cm^3)	Power Density (W/cm^3)
1[a]	118	4.2	0.99
1R	117	4.3	1.01
2	120	4.8	1.15
3	116	4.6	1.12
4[b]	175	—	—
5	172	4.5	1.04

Pellet	Power (W)	Density (g/cm^3)	Power Density (W/cm^3)
6	178	4.6	1.05
7	177	4.5	1.02
8	178	4.5	1.00
9	179	4.4	1.03
10	184	4.4	1.04

[a]Pellet fractured, re-pressed as 1R.
[b]Pellet fractured.

The intact pellets were used to fuel four source liners provided by Aerojet General to fill an order for the U. S. Navy. The loadings were as follows.

Liner No.	Pellets	Total Watts
1	5, 6	350
2	1R, 2, 3	353
3	7, 8	355
4	9, 10	363

On all pellets after No. 4, titanium wire support screens were used instead of nickel. The titanium appears to provide better protection against breakage caused by thermal shock during pellet handling and storage.

Planned operations during April include pressing of pellets for an order for four 720-W Sentinel sources plus preparation of the $^{90}Sr_2TiO_4$ needed for these sources. The current process status for strontium-90 is as follows.

Item	Strontium-90 (Ci)
In-process material	940,000
Strontium-90 products	530,000
Sources in fabrication	209,000
Returned SNAP sources	295,000
Completed sources awaiting shipment	19,500

2. Operational Summary

Item	March 1971 Number	March 1971 Amount (Ci)	FY 1971 Number	FY 1971 Amount (Ci)
HAPO shipments received	0	0	0	0
Product batches prepared	3	75,000	11	345,000
Sources completed	0	0	11	688,900
Special form containers loaded	0	0	25	53,400
Shipments to customers	0	0	29	796,700

3. Current Orders

Current orders for strontium-90 as sources or bulk powder are as follows:

Customer	Amount (Ci)	Estimated Shipping Date
U. S. Navy	208,000	April 1971
U. S. Navy	424,000	May 1971
Gulf Energy & Environmental Systems	~47,000	June 1971
Total	679,000	

An order is on hand for ~20,000 Ci as bulk powder to be scheduled and shipped when released by Teledyne Isotopes, Inc.

E. Strontium Pellet Vacuum Hot Press

A vacuum hot press has been designed to produce high-density $^{90}SrTiO_3$ and ^{90}Sr pellets. The design contains many of the features of the existing vacuum hot press presently in use at the FPDL with modifications to increase the pellet dimensions and to locate all cooling water passages on the outside walls of the press. Figure 3 is a schematic of the press (external cooling coils are not shown; numbers in parentheses in the following paragraphs are part numbers).

To increase the size of the pellets, a larger die body (38) was provided, and the stroke of the transmitter rod (3) was increased. The increase in the die body size required the following changes:

Die Rest Assembly (33) - The die rest (ATJ graphite) was enlarged to a diameter of 8 in. at its widest point with a diameter of 6-5/8 in. at its foot. A 6-5/8-in. ID by 1/2-in. ring is welded to the baseplate to center the die rest. A 4-1/32-in.-diam by 1/2-in.-deep recess in the die rest will position and support the die body.

Heating Element (37) - The heating element (ATJ graphite) was enlarged to 6-in. ID by 7-in. long to provide the capability of handling die bodies up to 5-1/2-in. OD by 7-in. long.

Heat Shield (34, 36, 40) - The heat shield (molybdenum) was enlarged to 7-1/2-in. ID by 8-1/2 in. long to contain the larger heating element.

Feed-Through Tubes (2) - The feed-through tubes (stainless steel) contain the heater support and contact bodies (brass) (31). The tubes were spread apart and the heater supports lengthened to handle the larger heater diameter and length.

The increase in the stroke of the transmitter rod required the following changes:

Die Body (38) - The die body (TZM) was lengthened to 7 in.

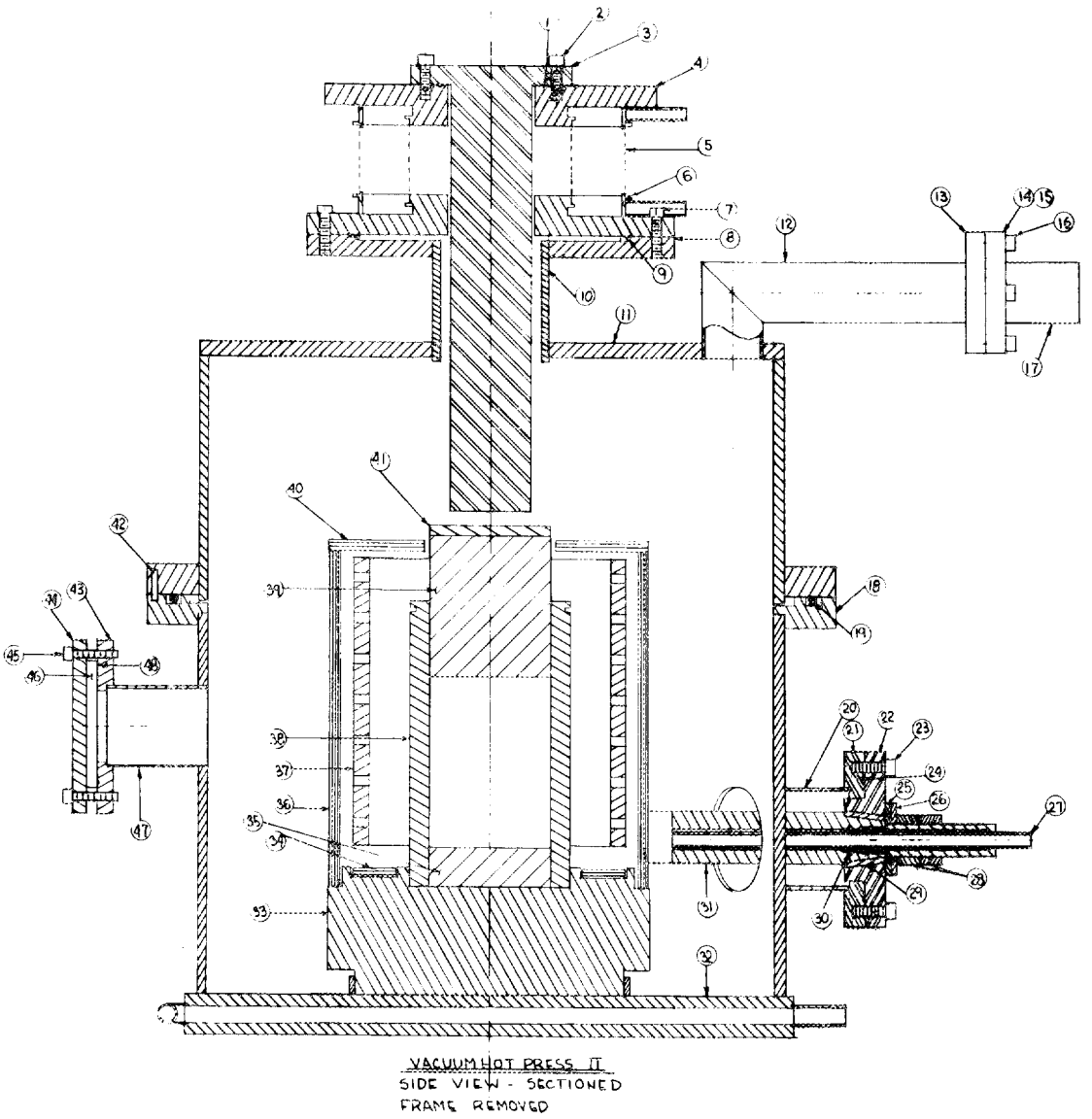

Fig. 3. Vacuum Hot Press — II, Side View.

Upper Housing (11) - The upper housing (stainless steel) was lengthened from 3 to 6 in. to provide additional head room for longer top punches.

Bellows Assembly (4-10) - The bellows assembly (stainless steel) was enlarged to provide a longer stroke and to accept a larger diameter transmitter rod. The bellows assembly provides a stroke of 3-9/16 in. compared with the earlier unit which had a stroke of less than 2 in. The bellows flanges were increased to 9 in. in diameter by 1/2 in. thick to accommodate the larger diameter bellows.

Transmitter Rod (3) - The transmitter rod (TZM) was enlarged and flanged for in-cell change out. The rod is 2 in. in diameter by 10-1/2 in. long with a 4-in.-diam by 1/2-in.-thick flange. The flange bolts onto the upper bellows flange (4) and is sealed with an O-ring.

The cooling passages that were on the inside wall of the lower housing (18) and the inside surface of the baseplate (32) on the previous model press have been placed on the outside of the vacuum area in the new press. The baseplate was increased to 1 in. thick with ten 3/8-in.-diam channels drilled to serve as cooling water passages.

Several additional minor changes, such as a new heater hold-down bracket, were made to provide easier in-cell operation of the press.

F. Strontium-90 Silicate Beta Sources

1. Characterization

The following studies are a part of the strontium silicate source characterization work.

Sample inactive strontium silicate sources containing aluminum matrix and graphite matrix were placed in a constant temperature furnace and held at elevated temperatures exposed to air (350, 500, and 600°C for the six aluminum matrix sources and 350 and 650°C for the four graphite matrix sources) to determine the long-range effect of temperature on the interior of the capsule. On termination of the experiment the samples will be sectioned for metallographic examination.

Four beta sources [fabricated using strontium silicate minibeads (32.5 Ci/g) in an aluminum matrix] showed no visual signs of corrosion after approximately seven weeks of immersion in 10% nitric acid, glacial acetic acid (17.5 *N*), 1.75 *N* acetic acid, and distilled water.

G. Promethium-147 Source Fabrication, Powder Shipments, and Current Orders

Current orders for promethium as bulk powder are shown below:

Customer	Amount (Ci)	Estimated Shipping Date
McDonnell Douglas Astronautics	50,000	April 1971[a]
Atomic Energy of Canada, Ltd.	1,000	May 1971
Minnesota Mining & Manufacturing Co.	2,500	May 1971
Total	53,500	

[a]To be shipped from Richland, Washington.

H. Short-Lived Fission Products Pilot Production (Production and Inventory Accounts)

Isotope	Number of Batches	Amount (Ci)
Xenon-133	3	~1,000
Cerium-144	1	36
Iodine-131	1	35
Barium-140	1	18
Strontium-89	1	18

I. Source Development

1. Strontium-89

Beta source measurements using the extrapolation chamber were continued as part of the beta source development program. The addition of a recorder and potentiometer has increased the reliability and usefulness of this instrument. The extrapolation chamber was used to measure five strontium-89 sources fabricated with output measurements of 33.1, 14.2, 13.5, 10.26, and 20.9 R/hr. Both surface dose rate measurements and uniformity measurements were made. The results of the uniformity measurements indicated that the combined results of source and instrument variation could be held within ±15%. These results were used to determine precisely the necessary input to give the required values of 11.00 and 22.00 R/hr at 1 mm. Three each of these sources will be fabricated for NASA for use in insect mutation studies.

2. Technetium-99

Measurements were made of a previously studied technetium-99 source to evaluate two collecting electrodes which required reconditioning (remachining the surface and spraying with Aquadag).

APPLICATIONS AND TECHNOLOGY SUPPORT - 08-01-04

A. Radioisotope Characterization, Quality Control, and Standards

1. Radioisotope Characterization

Furnishing of information in answer to inquiries continues to be an important feature of the characterization program. Data were given on the beta spectra of carbon-14 and promethium-147, and on the gamma spectra of certain mixtures of thorium daughters. An investigator using our niobium-95 in animal experimentation inquired about the nature of the oxalate complex, and he was told that it is unknown, that specialists in the chemistry of niobium have reported evidence for at least three complexes. Knolls Atomic Power Laboratory personnel revising the *Chart of the Nuclides* asked for our latest data, especially on half-lives.

2. Radioisotope Special Analysis and Quality Control

Over 460 copies of the report of the NRC standards panel were distributed to organizations, journals, and interested individuals. Requests for additional copies have begun to come in, and the report was announced in the latest *Nuclear News*. L. R. Zumwalt, panel chairman, received permission to use unpublished data from our survey in his invited paper for the June meeting of the American Nuclear Society. A bibliography of recent publications related to radioactivity standards was prepared for distribution at the ACS symposium and the meeting of the NRC standards subcommittee. A statistical analysis was made of the results of the intercomparison of measurements of iron-59 sponsored by the College of American Pathologists.

The standard deviation was 16% (eliminating one statistical outlier), the mean was only 4% below the value certified by NBS, and the range was 66 to 186% of the certified value. The work on sulfur-35 standards was completed, with the finding that assay by our control laboratory was insignificantly higher than that of the standards laboratories, i.e., 2.8% above NBS, 2.8% above the Radiochemical Centre, and 2.5% above the French CEA. The local calibration was adjusted to agree with NBS. Reviews were made of a paper on a new method of calculating "dead time" losses, one (for the ACS meeting) on "non-Poisson" statistics, and a carbon-14 method for "productivity" of a body of water.

B. Low-Energy Gamma and Secondary X-Ray Sources

1. Development of Sources for Determination of Lead in Aqueous Solutions by Fluorescence X-Ray Analysis

Three different radioactive sources were used to excite the L x rays of lead in an attempt to determine the lowest concentration of lead in aqueous solutions which can be detected by the use of x-ray fluorescence and a lithium-drifted silicon detector. These sources contained americium-241, gadolinium-153, or promethium-147. The sources were circular and faced upward toward the solution containing trace quantities of lead. The aqueous sample was contained in a sample holder which was fabricated by cutting 1-in. sections of 2-in.-diam BAKELITE tubing and then bonding a 0.00025-in. mylar film over one end. This sample holder would contain up to 40 ml of solution. The L x rays of lead produced in the solutions are measured by a lithium-drifted silicon detector and a multichannel analyzer.

At high concentrations of lead (above 100 ppm) the L x rays of lead could easily be produced by the low-energy gamma radiation from americium-241, gadolinium-153, or promethium-147/aluminum bremsstrahlung radiation even though the sources were encapsulated or shielded by different materials.

At concentrations of lead below 100 ppm, the background of radiation in the energy range of 6 to 18 keV interferes and sometimes covers the x-ray peaks which are to be measured. This background of radiation is caused by the scattering of the higher energy gammas which are present in the gadolinium-153, or the excitation of x-rays in the source shield or collimator.

A promethium-147/aluminum bremsstrahlung source containing 540 mCi and emitting only a small amount of high energy photons was placed in a tin shield to remove interfering x rays. The x rays from tin are above or below the L x-ray energies of lead and do not interfere with the determination. Solutions containing 1 to 100 ppm lead were analyzed. The lead L x-ray peaks could be detected in solutions only as low as 25 ppm of lead. Further development should be done to improve the sensitivity and to shorten the time of measurement.

C. Radiation Processing (Not Supported by 08 Program; WFO Account)

1. Radiolytic Oxidation of Dye Waste Solution

Pollution of rivers by dye waste effluent from textile mills and dye chemical manufacturers is a serious problem. Past experimental work has shown that radiolytic oxidation of the waste dye solution may be a practical method of destroying certain dyes and chemicals. The purpose of this investigation is to study and develop a method of radiolytic oxidation. The method developed must be economically feasible. A cobalt-60 gamma radiation source is being used to irradiate samples under a high pressure oxygen atmosphere. The solutions include both individual dyes and mixtures of dyes. This work is being supported by the American Association of Textile Chemists and Colorists (AATCC) and the Environmental Protection Agency.

The work to date has been carried out using random samples to observe gross effects over a large cross section of effluent samples. The current work is being systematized to study individual dye structures as represented by standard test dye solutions developed for the AATCC effluent studies. By so doing, the various effluent treatment methods under study, such as coagulation, charcoal adsorption, and trickling filter, can be related to each other. The standard dye solutions will be treated with gamma radiation under oxidizing conditions to obtain optimum radiation dose for COD and color removal.

We are also investigating methods to reduce the quantity of radiation required to produce the desired decolorization in dye effluents. Since over 99% of the weight of the effluent stream is water, it is desirable to reduce the radiation dose to the aqueous component and concentrate the radiation dose in the organic fraction to be oxidized. By placing charcoal in the irradiation vessel the charcoal adsorbable fraction can be removed from the effluent stream and retained on the charcoal. Thus, it is possible to increase the residence time of the organic fraction in the irradiation vessel. Flow rates can be adjusted to a maximum with respect to removal of the organic by the charcoal, and the radiation rate can be adjusted to provide for constant regeneration of the charcoal by degradation of the adsorbed organics.

Table 8 shows the results of experiments to determine the effect of gamma radiation induced oxidation on the regeneration of charcoal used to adsorb dye from aqueous solution.

Table 8. Capacity of Charcoal for Benzyl Cyanine 6B[a] Under Conditions of Irradiation and O_2 at 1500 psi

	Unirradiated Atmospheric Pressure	106 R/hr 1500-psi Oxygen
Flow rate (liters/hr)	0.5	2.7
Volume to breakthrough (liters)	14	b
Grams of charcoal	150	150
COD feed (mg/liter)	59	59
COD colored effluent	6	19
Transmission 550 μ (%)		
Feed	25	25
After 13 liters	>95	
After 14 liters	68[c]	
After 105 liters		88[d]

[a]Prepared in aqueous solution to a concentration as used in commercial dyeing operations.
[b]No breakthrough at 105 liters; experiment discontinued without evidence of breakthrough of the dye in feed solution.
[c]End point for adsorption of dye by 150 g charcoal.
[d]When flow rate was decreased to 2.5 liters/hr, transmission increased to >95%.

D. Radioisotope Safety

1. Sources Involved in a Fire

Three sources, each containing 1 Ci of cesium-137, which had been involved in an industrial fire in New Jersey were examined for evidence of leakage. The sources, which were doubly encapsulated in type 347 stainless steel, had wall thicknesses of 81 and 62 mils, respectively, for the inner and outer capsules. The surfaces of the capsules were considerably discolored by the heat of the fire, but the amount of oxidation was considered minor. Smear tests of the surfaces of both the outer and inner capsules showed these surfaces to be free of transferable contamination, and no leaks were found in either the inner or outer capsules by use of the vacuum leak test.

2. Source Classification Testing

A doubly encapsulated californium-252 neutron source, fabricated at the ORNL-TRU facility, was classified according to the ORNL Classification System.[8] The source was doubly encapsulated in type 304L stainless steel. Since the inner capsule of this source was also intended for use as a

[8]R. G. Niemeyer, *Source Application Guide Based on the ORNL Source Capsule Classification System*, ORNL-4427, Oak Ridge National Laboratory (July 1969).

singly encapsulated source, it was also classified. The inner capsule was approximately 1.25 in. long by 0.5 in. diameter. Both capsules had wall thicknesses of 50 mils.

The initial tests, designed to determine the limiting classification of the source, were performed on singly encapsulated prototypes. These initial tests were made under the assumption that the singly encapsulated source might meet the requirements for the most difficult category (Class IV-D). The source passed the Class D temperature requirements for maximum temperature, operating temperature, and thermal shock. It passed the Class IV structural tests for puncture resistance, crushing force, and impact force, but failed to pass the Class IV test for shear strength. The remaining tests of the singly encapsulated source showed that it passed the Class III tests for external pressure and shear strength. The inner source therefore meets the test requirements for temperature Class D and structural Class III, indicating a very high rating for containment integrity.

The doubly encapsulated source passed the test requirements for Class IV-D, which is the highest integrity rating in the ORNL Source Capsule Classification System.

3. Tritium Foils

A study to determine tritium losses from foils used in certain types of gas chromatograph detectors under various conditions of use is in progress. The tritium in these foils is in the form of titanium tritide on a stainless steel backing. Tests are being made to determine the effects of temperature, heating rate, gas flow rate, types of gas, foil cleaning procedures, and time on the tritium losses. Foils having tritium concentrations of 250, 500, and 1000 mCi/in.^{2} were obtained for testing.

The 250-mCi/in.^{2} foils were manufactured differently from the other foils in that the tritium was absorbed from a gas mixture containing approximately 75% deuterium and 25% tritium; whereas, for the 500- and 1000-mCi/in.^{2} foils, the tritium was absorbed from a pure tritium atmosphere. In order that the results of the various tests would be comparable, a new foil was used for each test. Tritium losses were obtained by using beta liquid scintillation counting of samples taken with a tritium recovery train.

The average tritium loss rates of new foils for operating times of 1, 2, and 3 hr at 150°C in flowing argon were obtained for each type of foil by measuring the total tritium loss during each of the three 1-hr operating periods. The 98-99% lost was as tritium oxide.

As can be seen in Fig. 4 the initial average losses from a new foil are relatively high when compared with the average losses for the 3-hr period. The shapes of the curves indicate that after approximately 6 to 8 hr of operation under the test conditions the loss rates will level off considerably and remain nearly constant at values which are 40-60% lower than those obtained during the first hour of operation. Additional tests are planned to determine losses over a longer period of time at the

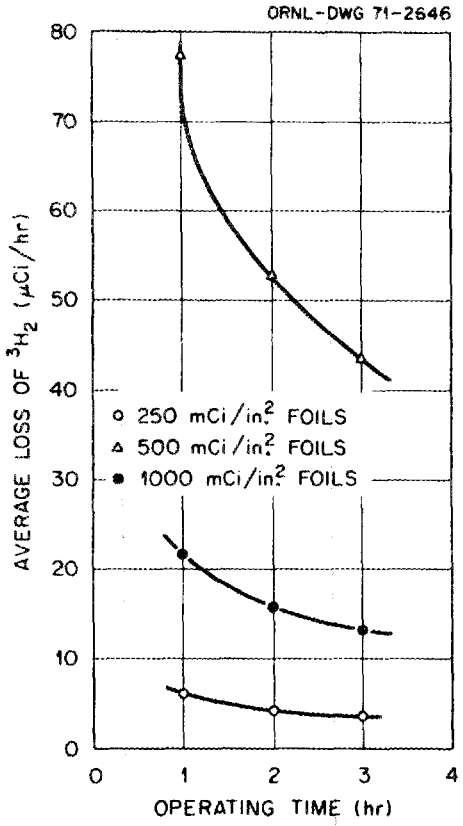

Fig. 4. Tritium Losses as a Function of Time in Argon at 150°C.

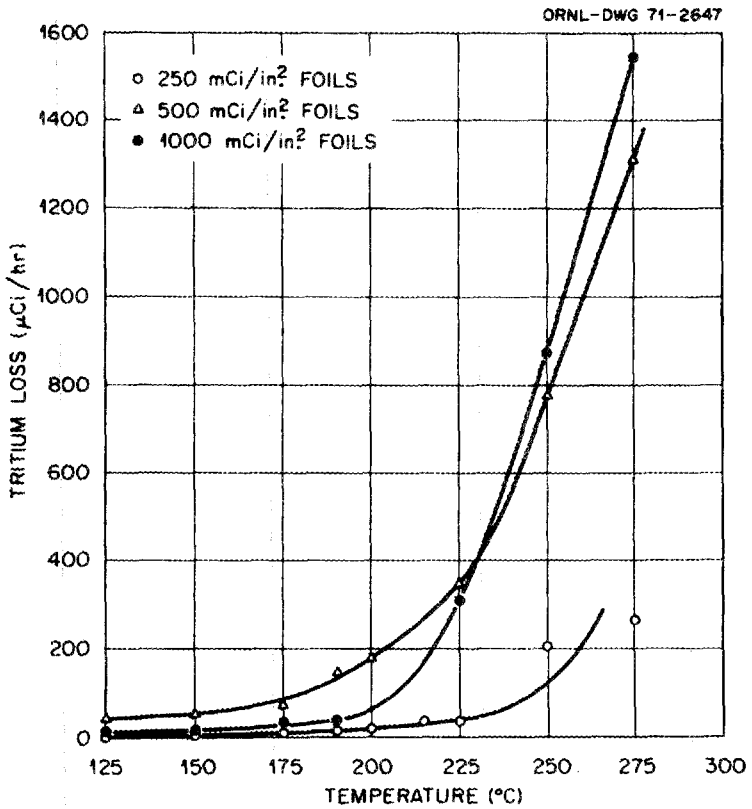

Fig. 5. Tritium Loss as a Function of Temperature in Argon.

recommended maximum use temperature of these foils, approximately 200°C. The data given in Fig. 4 represent the most serious average losses expected from the foils under the test conditions.

Note that for increasing tritium concentration of the foils manufactured from pure tritium (500 and 1000 mCi/in.^{2}), tritium losses decrease. This relationship was previously observed when tritium target foils were being evaluated.[9] The loss rates from the 250-mCi/in.^{2} foils were unexpectedly low, probably due to some effect related to the deuterium content of the absorbed gas.

In another series of tests, tritium losses from the foils were measured for a 1-hr period in flowing argon as a function of temperature over the range of 125 to 275°C. A new foil was used for each temperature. The results of these tests are shown in Fig. 5. The losses increased slowly with temperature to a breakpoint above which the losses increased at a much higher rate. The breakpoints for the 250-, 500-, and 1000-mCi/in.^{2} foils are approximately 225, 175, and 195°C, respectively. The

[9]A. F. Rupp, *Radioisotope Program (8000) Progress Report for March 1970*, ORNL-TM-2910, Oak Ridge National Laboratory.

comments in the previous paragraph concerning tritium losses with respect to deuterium content of the absorbed gas or the activity concentration of the foils apply to the temperature tests also.

TECHNOLOGY UTILIZATION - 08-01-05

A. Information Center

In March, 122 requests for information were filled with the dispatch of 220 documents or notes — 175 were documents already prepared at IIC. Eight sales letters were translated, and a thousand pages of a Russian translation were edited for NASA under a special interagency arrangement.

In order to reduce the costs of placing the first 10 thousand accessions on computer, the IIC has taken over the job of putting these cards on tape. Approximately 75% are in various stages of completion at ORGDP Computer Technology Center, and the remainder are being completed at the Isotopes Information Center.

A list of reviews in progress is shown below.

Title	Author(s)	Status (% Complete)
Iodine-125	P. S. Baker and Martha Gerrard	30
Patent Literature on Process Radiation and Irradiator Design, Part 1. U. S. Patents 1950 Through 1968	R. E. Greene, Helen S. Warren, and P. S. Baker	Draft approved by DID; publication preparation in progress
Potato Sprout Inhibition by Radiation, Part 2	F. E. McKinney	50
Selected Abstracts of World Literature on Production and Industrial Uses of Radioisotopes, Part 4	Martha Gerrard and P. S. Baker	At reproduction
Self-Diffusion in Liquids	F. J. Miller	75
Strontium-90	Roberta Shor, R. H. Lafferty, Jr. and P. S. Baker	At reproduction
Technetium-99m: Preparation and Uses	Martha Gerrard and P. S. Baker	65
Radioisotopes in the Textile Industry	F. J. Miller	90
Grain Disinfestation — A Worldwide Review	F. E. McKinney	20
Presowing Irradiation of Seed	Russian book translated and edited by Martha Gerrard	Final typing being proofed
Iodine-131 Production Methods	French report being translated by Martha Gerrard	References being checked
Radioelectrochemistry	Helen P. Raaen	1st draft ~75

B. Isotopes and Radiation Technology

Isotopes and Radiation Technology 8(3) page proof was checked, proofing of galleys for 8(4) was started, writing and editing of manuscript for 9(1) was continued, and preliminary outline for 9(2) was made.

C. Publications

Helen P. Raaen, P. S. Baker, Robert H. Lafferty, Jr., Ann S. Klein, and Linda P. Helton (Editors), *Permuted Isotopes and Radiation Technology Indexes (PIRTI), 1962--1969*, ORNL-IIC-31, Vol. 1-7 (March 1971).

RADIOISOTOPE SALES

A request for quotation was received form Aerojet Nuclear Systems Company for up to eight strontium-90 sources containing a total of approximately 62,000 Ci. A request for quotation was received from Teledyne Isotopes for approximately 300,000 Ci of strontium-90. A request for quotation was received from Amersham Searle Corporation for up to 10,000 Ci of cesium-137 as bulk CsCl. An order was received from Radium Chemie, Switzerland, for 30,000 Ci of tritium.

Shipments made during the month include 4,000 Ci of tritium to New England Nuclear Corporation, 2,500 Ci of tritium to Physics International Corporation, and 2,590 Ci of tritium to the University of California, Los Alamos. Other shipments include 238.87 Ci of xenon-133, 11,361 Ci of tritium, 150 Ci of krypton-85, 200 mCi of promethium-147 as 16 ceramic pellets, 14 mCi of gadolinium-153 as eight ceramic pellets, 359 Ci of tritium-helium mixture, 30 Ci of 21.02% enriched krypton-85, and 2 Ci of 18.64% enriched krypton-85.

The radioisotopes sales proceeds and shipments for the first eight months of FY 1970 and FY 1971 are given in Table 9.

Table 9. Radioisotope Sales and Shipments

Item	7-1-69 thru 2-28-70	7-1-70 thru 2-28-71
Inventory items	$411,318	$398,337
Major products	72,537	84,633
Radioisotope services	153,163	202,380
Cyclotron irradiations	94,512	90,158
Miscellaneous processed materials	57,944	43,223
Packing and shipping	48,960	55,923
Total Radioisotopes Sales Proceeds	$838,434	$874,654
Number of Radioisotope Shipments	1,665	2,103

ADMINISTRATIVE

Visitors to the IDC and travel by IDC personnel are given in Tables 10 and 11.

Table 10. Visitors to IDC

Affiliation	Purpose of Visit
Aero-Space Laboratories Nuclear Structure Group Wright-Patterson AFB Dayton, Ohio	Discuss bismuth-206 paper, conduct $^{44}Ca(n,p)^{44}K$ experiment, and analyze bismuth-205 data

Table 10. Continued

Affiliation	Purpose of Visit
Vanderbilt University Nashville, Tennessee	Discuss UNISOR on-line mass spectrometer, europium-148 paper, gadolinium-151 paper, and bismuth-205 paper; conduct europium-149 experiment
Furman University Greenville, South Carolina	Analyze gallium-67 experimental data
Isotope Products Burbank, California	Discuss availability of IIC reports
AEC-DTIE	Discuss operation of IIC
ANS, Standards Group	Study operation of IIC
Director of Information Centers and Research Libraries, Pentagon, and the civilian counterpart	Tour Isotopes Information Center

Table 11. Travel by IDC Personnel

Site Visited	Purpose
Wrightsville Beach, N. C.	To participate in RIST experiment
Lawrence Radiation Laboratory	To discuss fabrication problems
Atlanta, Georgia	Present paper at AATCC Symposium on the Textile Industry and the Environment
Washington, D. C.	Program discussions with AEC Division of Research
Washington, D. C.	Briefing session for Navy personnel on strontium-90 heat sources
Los Angeles	Present paper at 161st National ACS meeting

PUBLICATIONS

Journals

D. J. McMillan, J. H. Hamilton, M. Mladjenovic, J. C. Manthuruthil, and J. J. Pinajian, Conversion Electron Measurements in the Decay of ^{156}Tb, *Z. Phys.* 241: 103-16 (1971).

Reports

A. F. Rupp, *Radioisotope Program (8000) Progress Report for February 1971*, ORNL-TM-3341, Oak Ridge National Laboratory.

E. E. Pierce, *Radioisotope Development Laboratory Building 3047 Hazards Report*, ORNL-TM-946 (Rev.), Oak Ridge National Laboratory (March 1971).

Translations

V. I. Raiko, Study of the Extraction and the Shaping of Ion Beams in Plasma Sources, *Kernenergie* 10: 85-89 (1967, ORNL-tr-2462, translated by Martha Gerrard and J. J. Pinajian.

W. Hebel, Production of Higher Specific Activity Radionuclides in the BR 2 Reactor, Mol, *Kerntechnik* 8: 78-80 (1966), ORNL-OLS/15/71 translated by J. J. Pinajian.

INTERNAL DISTRIBUTION

1. A. L. Allen
2. M. A. Baker
3. P. S. Baker
4. E. E. Beauchamp
5. G. E. Boyd
6-8. T. A. Butler
9. F. N. Case
10. J. A. Cox
11. F. L. Culler
12. W. C. Davis
13. J. S. Drury
14. J. H. Gillette
15. H. R. Gwinn
16. R. F. Hibbs
17. K. E. Jamison
18. Lynda Kern
19. E. H. Kobisk
20. E. Lamb
21. R. E. Leuze
22. J. L. Liverman
23. L. O. Love
24. W. S. Lyon
25. R. E. McHenry
26. F. M. O'Hara
27. W. W. Parkinson
28. J. J. Pinajian
29. M. E. Ramsey
30. S. A. Reynolds
31-32. R. A. Robinson
33. D. A. Ross
34. A. F. Rupp
35. R. W. Schaich
36. A. H. Snell
37. K. A. Spainhour
38. M. R. Skidmore
39-40. H. F. Stringfield
41. D. B. Trauger
42. A. M. Weinberg
43. J. C. White
44-45. Central Research Library
46. Document Reference Section
47-51. Laboratory Records Department
52. Laboratory Records - RC

EXTERNAL DISTRIBUTION

53. G. A. Andrews, ORAU, Medical Division, Oak Ridge, Tennessee
54. Hal Atkins, Brookhaven National Laboratory, Upton, New York
55. D. S. Ballantine, AEC, Washington, D. C.
56-59. R. F. Barker, AEC, Washington, D. C.
60. N. F. Barr, AEC, Washington, D. C.
61. O. M. Bizzell, AEC, Washington, D. C.
62. C. R. Buchanan, AEC, Washington, D. C.
63. R. L. Butenhoff, AEC, Washington, D. C.
64. T. D. Chikalla, PNL, Richland, Washington
65. D. F. Cope, AEC Site Representative, ORNL
66. J. C. Dempsey, AEC, Washington, D. C.
67. W. K. Eister, AEC, Washington, D. C.
68. E. E. Fowler, AEC, Washington, D. C.
69. J. D. Goldstein, AEC, Washington, D. C.
70. A. Gottschalk, Argonne Cancer Research Hospital, Chicago, Illinois
71. F. D. Haines, AEC, Washington, D. C.
72-74. J. E. Hansen, PNL, Richland, Washington
75. J. W. Irvine, MIT (Consultant)
76. J. Lawrence, Lawrence Radiation Laboratory, Berkeley, California
77. J. E. Machurek, AEC, Washington, D. C.
78. J. N. Maddox, AEC, Washington, D. C.
79. J. C. Malaro, AEC, Washington, D. C.
80. W. E. Mott, AEC, Washington, D. C.
81. J. A. Powers, AEC, Washington, D. C.
82. G. J. Rotariu, AEC, Washington, D. C.

83. B. A. Ryan, AEC, Richland, Washington
84. W. D. Sandberg, AEC, Aiken, South Carolina
85. S. J. Seiken, AEC, Washington, D. C.
86. R. W. Shivers, AEC, Washington, D. C.
87. F. J. Skozen (Krizek), Argonne Cancer Research Hospital, Chicago
88. P. E. Smith, ARHCO, Richland, Washington
89. L. G. Stang, Jr., BNL, New York
90. G. Taplin, University of California, Los Angeles, California
91-96. D. H. Turno, SRL, Aiken, South Carolina
97. A. R. Van Dyken, AEC, Washington, D. C.
98. Laboratory and University Division
99-100. Division of Technical Information Extension