OAK RIDGE NATIONAL LABORATORY
operated by
UNION CARBIDE CORPORATION • NUCLEAR DIVISION
for the
U.S. ATOMIC ENERGY COMMISSION

DATE MAR 23 1971

ORNL-TM-946 (Rev.)

MARTIN MARIETTA ENERGY SYSTEMS LIBRARIES
3 4456 0059853 8

RADIOISOTOPE DEVELOPMENT LABORATORY BUILDING 3047 HAZARDS REPORT

E. E. Pierce

NOTICE This document contains information of a preliminary nature and was prepared primarily for internal use at the Oak Ridge National Laboratory. It is subject to revision or correction and therefore does not represent a final report.

This report was prepared as an account of work sponsored by the United States Government. Neither the United States nor the United States Atomic Energy Commission, nor any of their employees, nor any of their contractors, subcontractors, or their employees, makes any warranty, express or implied, or assumes any legal liability or responsibility for the accuracy, completeness or usefulness of any information, apparatus, product or process disclosed, or represents that its use would not infringe privately owned rights.

ORNL-TM-946 (Rev.)

Contract No. W-7405-eng-26

ISOTOPES DEVELOPMENT CENTER

RADIOISOTOPE DEVELOPMENT LABORATORY BUILDING 3047 HAZARDS REPORT

Written by
R. A. Robinson
October 5, 1964

Revised by
E. E. Pierce
February 5, 1971

Isotopes Division

MARCH 1971

MARTIN MARIETTA ENERGY SYSTEMS LIBRARIES

3 4456 0059853 8

OAK RIDGE NATIONAL LABORATORY
Oak Ridge, Tennessee
operated by
UNION CARBIDE CORPORATION
for the
U.S. ATOMIC ENERGY COMMISSION

CONTENTS

	Page
Introduction	1
Facility Description	1
Building Description	1
Building Alterations	2
Cell Description	3
Description of Manipulator Cubicle (Room 110)	5
Description of Vacuum Glove Boxes in Room 105	6
Description of Glove Boxes in Room 211	7
Description of Vacuum Glove Box in Room 212	7
Process Equipment	8
Auxiliary Equipment	8
Vacuum System	8
Refrigeration	9
Hot Water Systems	9
Air-Handling Equipment	9
Jet Eductors	10
Containment	10
Primary Containment - Cells	10
Primary Containment - Cubicle (Room 110)	12
Glove Boxes - Room 105	13
Primary Containment - Glove Boxes - Room 211	13
Glove Box - Room 212	13
Building Containment	14
System 1	14
System 2	15

Page

System 3 15

Chemical Processing 19

Criticality 19

Operating Safeguards 20

Procedures 20

Run Sheets 20

Built-in Safeguards 20

Containment System 20

Cell Radiation Monitors 21

Constant Air Monitors 21

Neutron Monitors 21

Vacuum System 21

Laboratory Hot Drains 21

Air Handling 21

Cell Floor Drains 21

Back-flow Preventers 22

Hot Hoods 22

Inter-cell Plugs 22

Alarms 22

Procedural Safeguards 22

Building Services and Equipment Maintenance 23

Personnel Exposure 23

Maximum Curie Load 23

Building Personnel 26

Radiation and Contamination Control 28

Liquid Wastes 29

Page

Low-Level Radioactive Waste 29

Hot Waste 29

Storm Sewer 30

Gaseous Waste 30

Hot Off-Gas System 30

Cell Ventilation System 31

Solid Waste 32

Process Hazards 33

Appendix A 34

Appendix B 43

Appendix C 53

Appendix D 71

RADIOISOTOPE DEVELOPMENT LABORATORY BUILDING 3047 HAZARDS REPORT

R. A. Robinson and E. E. Pierce

INTRODUCTION

The Radioisotope Development Laboratory (Bldg. 3047) was originally designed and constructed for development work with low, intermediate, and high level beta- and gamma-emitting radioisotopes. A detailed description of the facility is included in ORNL-TM-946.

Increasing requirements for alpha emitters such as ^{244}Cm have made it necessary to install special facilities in Bldg. 3047 for development work with these materials. The facilities are located in Rooms 105, 110, 211, and 212 (see 3047 Bldg. Plan - Fig. 1, Appendix A).

FACILITY DESCRIPTION

Building Description

The Radioisotope Development Laboratory, Bldg. 3047, is a three-story, structural-steel-frame building having concrete block exterior walls. The overall dimensions are 142 x 40 x 31 ft. Building floor area and volume are distributed as shown in Table 1.

Table 1. Floor Area and Volume of Radioisotope Development Laboratory (Bldg. 3047)

	Volume (ft^3)	Net Usable Area (ft^2)	Service Area (ft^2)	Wall Area (ft^2)	Total Area (ft^2)
First floor[a]	92,320	4,811	810	734	6,355
Second floor	81,920	4,330	1,040	310	5,680
Third floor	30,000	1,037	2,118	217	3,372
Roof[b]	990	-	92	27	119
Total	205,230	10,178	4,060	1,288	15,526

[a]Includes vacuum pump pit.
[b]Includes stairwell (penthouse only).

The building is bounded on the west by Bldg. 3028, on the south by Isotopes Circle, and on the north by Hillside Avenue. On the east the building is joined to the Isotopes Technology Building (Bldg. 3047A), a three-story structural-steel-frame, concrete block building that has volume and floor area distributed as shown in Table 2 (see Fig. 2, Appendix A).

Table 2. Floor Area and Volume of Isotopes Technology Building (Bldg. 3047A)

	Volume (ft^3)	Net Usable Area (ft^2)	Service Area (ft^2)	Wall Area (ft^2)	Total Area (ft^2)
First floor	33,800	1,031	1,552	237	2,820
Second floor	33,800	2,013	634	173	2,820
Third floor	33,800	2,222	424	174	2,820
Total	101,400	5,266	2,610	584	8,460

The Isotopes Technology Building is not a radiochemical facility; its air handling system is not connected in any way with the Radioisotope Development Laboratory ventilation system and it is separated from the containment zone of the Radioisotope Development Laboratory by at least three doors in series. For these reasons, the Isotopes Technology Building is considered a separate building, even though there are connecting corridors between it and the Radioisotope Development Laboratory.

The Radioisotope Development Laboratory houses four manipulator-type hot cells, five laboratories, four alpha handling areas, ten offices, a change room, and storage and service areas. The four hot cells, three of the laboratories, and one of the alpha handling facilities are in the original containment zone of the building; the three remaining alpha handling facilities (Rooms 110, 211, and 212) are in the other containment zones; the offices, service areas, and one laboratory for nonradioactive work are in noncontained parts of the building. Building location and floor plan drawings are shown in Figs. 1-2 in Appendix A.

All rooms in Bldg. 3047 are equipped with a built-in sprinkler system for fire protection.

Building Alterations

The chemical engineering section located in the west end of Bldg. 3047 (Rooms 110 and 212) and the radioisotopic laboratory-west (Room 211) have been converted into three facilities for handling alpha emitters (Figs. 1-3, Appendix A). Room 110 contains ~900 ft^2 of floor area. This does not include the air lock, Health Physics office, and stairwell. A lift

truck access air lock permits entry to Room 110 through gasketed doors and access to Room 212 is accomplished through a gasketed hatch. A 3-ton overhead crane permits the transfer of equipment and material from the air lock to Rooms 212 and 211.

Room 105 was originally listed as a decontamination room. The room has been equipped with two connected vacuum glove boxes for handling alpha-emitting radioisotopes.

Cell Description

The four manipulator cells designated A, B, C, and D are located as shown on Fig. 1 in Appendix A. A description of the cells is given in Table 3.

Table 3. Building 3047 Cell Description

Cell	Inside Dimensions (ft)	Cell Liner[a]	Equivalent Standard Concrete Shielding (ft)
A	8 x 6 x 13	3/16-in. 304 stainless steel	4.4
B	8 x 8 x 13	3/16-in. 304 stainless steel	4.4
C	8 x 8 x 13	3/16-in. 304 stainless steel	5.9
D	8 x 6 x 13	3/16-in. 304 stainless steel	4.4

[a]The cell roof plugs are concrete painted with four coats of Amercoat 33 HB.

The walls and top of cells A, B, and D are fabricated of 3-ft-thick barytes concrete ($\rho = 3.5$). The top plugs and front and rear walls of cell C are fabricated of 2-1/4-ft-thick barytes concrete and 9-in.-thick steel plate. All common walls between cells are 3-ft-thick barytes concrete. The rear access doors on cells A, B, and D are of 16-in.-thick laminated steel plate; cell C has a 21-in.-thick laminated steel access door (see Fig. 4, Appendix A).

Each cell has a laminated lead-glass viewing window composed of 6.2- and 3.3-density lead glass arranged to give shielding which is equivalent to the cell walls. The windows are of stepped construction (36 by 36 in. on operating face, 40 by 40 in. on inside cell face) and are sealed in the cell wall by 20-gage stainless steel flashing that is welded to the cell liner.

All steam, air, electrical, and water services originate from headers located above the operating corridor and enter the cell through a valve (or switch) on the operating face. The radioactive services, cell exhaust, hot drain, process drain, hot off-gas, and vacuum enter the cells from underground headers located behind the cell block.

Each cell has the following service penetrations:

Two 10-in.-ID manipulator sleeves
One 6-in. stepped sleeve and plug built into roof plug
Four 1-1/2-in. stepped sleeves and plugs built into south wall of cell
One 4-in. stepped sleeve and plug built between adjacent cells
Six 1-in. offset sleeves capped inside and outside of cell
Four 1/2-in. offset sleeves capped inside and outside of cell
Five 1-in. electrical conduits
One 1-1/4-in. electrical conduit
Two 1-1/2-in. electrical conduits
One 18-in.-ID cell ventilation exhaust line
Two 1-in. vacuum lines
One 2-in. hot off-gas line
One 2-in. radioactive hot drain
One 2-in. process drain capped inside cell
Four 1-in. process water lines
One 1/2-in. hot process water line
Two 1/2-in., 90-lb plant air lines
Two 3/4-in., 15-psig steam lines
Two 1/2-in. transfer lines from cask unloading station
Seven 1/2-in. air lines for in-cell air hoist operation
One 36- by 36-in. stepped shielding window penetration
One 3-1/2- by 8-1/3-ft stepped cell door
Roof plugs giving full cell opening (8 by 8 ft and 8 by 6 ft)
Two 16-1/2 by 17-1/2-in. inter-cell conveyor openings
One cell air inlet line (8-in. ID for cells A, B, and D and 12-in. ID for cell C)

Personnel entrance to the cells is normally through the cell doors on the south side of each cell. Equipment which is too large to go through the cell doors will enter through the roof plugs.

The introduction or removal of small items such as glassware and samples during cell operation is accomplished by using the inter-cell conveyor system which terminates in loading-unloading cubicles located on the east and west ends of the cell block. These cubicles have 6 in. of lead shielding and a 6.2-density lead-glass viewing window. The cubicle floor pans drain directly to the hot drain system, and the conveyor cart tunnel extending the length of the cell block drains to the individual cells. The conveyor cart can tolerate loads up to 50 lb having dimensions not exceeding 12 x 12 x 12 in.; it is driven by electric motors located outside each of the terminal cubicles. Cell ventilation on the cubicles is obtained by way of the cells; i.e., the cubicles have no independent ventilation system.

The stepped plugs which enter through the rear of the cells are provided only for bringing in instrument or special power bundles associated with a specific experiment. When they are not in use, these plugs are locked in place by a steel bar bolted to the wall. The 6-in. stepped plug entering the top of each cell can be used for surveying a cell during decontamination and to introduce a hose or spray rig during the initial phases of cell decontamination.

The cells are equipped with mercury vapor lamps for lighting during operation and incandescent lamps for lighting during maintenance.

The cell air handling equipment and containment instrumentation is described in section on "Containment," subsection "Primary (Cell) Containment."

Description of Manipulator Cubicle (Room 110)

The inert atmosphere manipulator cubicle is located as shown on Fig. 1 in Appendix A.

The cubicle has a stainless steel liner with inside dimensions of 54 in. wide x 55 in. deep x 65 in. high. Enclosing the liner are six reinforced steel tanks with 18 in. of water shielding. A total radiation dose from 7.5 g of $^{244}Cm_2O_3$ inside the cubicle at a distance of 42 in. will be 0.3 mrem/hr.

An 18-in.-thick water-filled viewing window is incorporated in the operating (east) face of the cubicle and the manipulators are Central Research Laboratories Model L (sealed) Master Slave units.

A glove box is attached to a vacuum access port on the south face of the cubicle and provides bag-in and bag-out capability for introducing and removing materials to and from the vacuum access port.

The cubicle is equipped for a controlled flow of argon and is operated at -0.5 in. water gage below the Room 110 pressure which is -0.3 in. water gage relative to the outside pressure. The cubicle exhaust is directed to the hot off-gas system through dual high-efficiency filters that are accessible for routine testing. The filters are located inside the cubicle and each filter may be changed while the other is in operation.

The instrumentation is designed for fail-safe operation in the event of electrical or air failure and a schematic outline is shown in Fig. 5, Appendix A.

Pneumatically operated pressure control valves regulate the cubicle exhaust and the argon inlet flow. Sensing units on the exhaust system prevent excessive pressure or vacuum in the cubicle. All exhaust and inlet lines are protected by high-efficiency in-line filters.

The cubicle temperature is monitored by a heat-sensing unit that is connected to an audible alarm. The alarm activates the Bldg. 3047 panel alarm system in Room 109. Combustion inside the cubicle will be controlled by maintaining an inert gas atmosphere.

Personnel entrance to the cubicle is through an opening in the rear (west) side of the cubicle liner. The opening is equipped with a

removable cover that contains glove ports and a viewing window. The water-shield tank for the rear of the cubicle is movable to permit access to the services, gloves, etc. All services to the cubicle are routed through service panels in the rear of the cubicle liner.

During major equipment changes in the cubicle through the rear access panel a temporary plastic film enclosure will be erected to confine any radioactive contamination that may escape during the transfers. The enclosure will be connected to the cell ventilation system.

A vacuum access port permits the introduction and removal of materials to and from the cubicle without disturbing the inert-gas atmosphere.

The access glove box is equipped with a bag port and is designed to confine any radioactive contamination that may escape from the cubicle during the transfer of equipment or materials through the vacuum air lock. The glove box is connected to the cell ventilation system and the inlet and exhaust are equipped with high-efficiency filters. The filters are accessible for routine testing.

The cubicle atmosphere is continuously monitored with a Beckman Model G-2 oxygen analyzer.

An evaluation is made of each new experiment by the Isotopes Review Committee before the development work is started.

Description of Vacuum Glove Boxes in Room 105

Two connected vacuum glove boxes with vacuum access ports are located in Room 105. Each of the two access ports is equipped with a glove box enclosure to permit the safe entry and removal of radioactive materials and equipment. The vacuum system is used to evacuate the glove boxes and ports for purging with argon. During normal operation the vacuum enclosures contain an argon atmosphere and exhaust to the cell ventilation system. Each enclosure is equipped with a vacuum breaker to guard against excessive negative pressure during operating periods when the glove covers are removed. The enclosures exhaust continuously to the cell ventilation system. Room 105 is protected against fire by overhead sprinklers. An oxygen analyzer is connected to a manifold to permit continuous monitoring of either glove box. The instrumentation for each unit is pneumatically operated and is of fail-safe design (see Fig. 6, Appendix A).

A fast-neutron monitor is mounted ~6 ft from the glove boxes and is in continuous operation when the glove boxes are in use. The alarm on the instrument is connected to an adjustable set point in order to accommodate varying conditions. The alarm is set at 6 mrem under normal operating conditions. A Q-2091 alpha survey meter has been adapted for dual purpose service. When the probe is not in use for personnel surveys it is placed over a filter holder that has a flow of air from the

room continuously passing through it. This provides a reliable air monitor in a small instrument package. The air monitor filter is changed daily.

A description of each new experiment is submitted to the Isotopes Review Committee for mechanical, chemical, and radiation safety evaluation before the experimental work is started.

Room 105 is a part of the contained portion of Bldg. 3047 including the four manipulator cells on the first floor and three laboratories on the second floor (see Fig. 1, Appendix A).

Description of Glove Boxes in Room 211

Three interconnected glove boxes are located in Room 211 as shown on Fig. 1, Appendix A. Two of the boxes are constructed of metal, and the third box is constructed of fire-resistant Plexiglas and is used primarily as a confinement enclosure for specialized experimental equipment. Radioactive materials handled in the Plexiglas enclosure are encapsulated to prevent excessive contamination on the internal surfaces.

The two metal boxes are equipped with bag ports for introducing or removing materials under sealed conditions. The bags are sealed with an electric impulse sealer.

All services, such as water, electricity, vacuum, are introduced through sealed metal connectors in the rear of the boxes.

A fire-sensing unit is installed in each glove box and is connected to a local alarm and to the monitored panel in Room 109. The exterior of the glove boxes is protected from fire by the overhead sprinkler system in Room 211.

A description of each new experiment to be performed in the glove boxes is submitted to the Isotopes Review Committee for examination relative to mechanical, chemical, and radiation safety before the development work is started.

Description of Vacuum Glove Box in Room 212

A stainless steel vacuum glove box with four glove ports, two vacuum access ports, and a removable rear access plate is located in Room 212 for handling alpha emitters such as ^{244}Cm. The volume of the box is ~25 ft^3. Confinement enclosures with bag-out and bag-in provisions permit the safe removal and introduction of materials through the vacuum access ports.

The glove box is equipped for a controlled flow of argon and is operated at -0.5 in. water gage below the Room 110 pressure which is -0.3 in. water gage relative to the outside pressure. The glove box exhaust is directed to the hot off-gas system through dual high-efficiency filters. The filters are located outside the glove box and each filter may be changed while the other is in operation.

A vacuum breaker is installed in the vacuum-argon system to prevent excessive negative pressure in the glove box when the glove covers are removed.

The probability of fire inside the glove box is controlled by maintaining an inert-gas atmosphere, and the exterior of the boxes is protected by an overhead sprinkler system.

The Isotopes Review Committee examines each new experiment for mechanical, chemical, and radiation safety before the development work is started.

The instrumentation is designed for fail-safe operation in the event of electrical or air failure, and a schematic outline is shown in Fig. 7, Appendix A.

The alarm system is connected to a local alarm and to the monitored panel which is located on the west wall of Room 109.

Process Equipment

Building 3047 is a research and development laboratory, and most of the radioactive processing equipment is set up for each experimental investigation and dismantled at the conclusion of the experiment. Three high-temperature vacuum furnaces are installed in "contained" areas of the building (Rooms 110, 113, and 212) and are used for long-term compatibility experiments with radioactive compounds and encapsulating materials. All radioactive materials to be tested in the furnaces are encapsulated to reduce the probability of contamination.

The access port to each furnace is equipped with a glove box enclosure with bag-in and bag-out capability.

When it is necessary to remove the access port in order to make repairs to the furnace components, a plastic enclosure is erected around the furnace to denote a contamination zone. The enclosure prevents the spread of radioactive contamination to the surrounding areas.

Auxiliary Equipment

Vacuum System

House vacuum for both the cells and laboratories is provided by a single-stage, rotary, water-sealed pump (Nash Hytor Model H-4). The pump and

all piping and valves in the system are 300 series stainless steel (304L and 347). The seal water is recirculated through a heat exchanger which can discharge the water to hot drain if it becomes contaminated. The cooling water passing through the heat exchanger to cool the seal water is discharged to the process drain at the rate of 8 gal/min. The air flowing in the system passes through a 100-gal stainless steel surge tank before going into the pump to disengage any liquid or solid that may be pulled into the vacuum system. The exhaust air from the pump is discharged into the cell ventilation duct under the building.

The system also includes an air eductor in parallel with the mechanical vacuum pump to provide high pumping capacity during the last stages of pumpdown from 7 in. Hg abs to 3 in. Hg abs. This eductor uses air from the vacuum pump room for the motive fluid and discharges into the cell ventilation system. The entire system including the vacuum pump, air eductor, seal water circulating pump, seal water hold tank, seal water heat exchanger, and the vacuum surge tank is located in an underground pit below first floor equipment Room 102. Access is through a manhole on the south side of the building. The roof and wall facing the access way provide 12 in. of concrete shielding.

Refrigeration

A Trane "Centravac" compressor and chiller unit (Freon-22) with a capacity of 175 tons provides chilled water which is circulated at 100 gal/min to the air-handling units in the building. Heat removal from the compressor is accomplished by a closed-loop water system operating through a dual cooling tower located on the roof. The unit is located in the first floor equipment area, Room 102. The water-circulating pumps for both the tower water and chilled water are located in the second floor equipment area, Room 206. Both the tower-water and chilled-water circulating systems have an installed spare pump.

Hot Water Systems

The equipment for both domestic and process hot water systems is located in Room 206 and consists of a steam-to-water shell and tube heat exchanger, hot water hold tank, and an expansion tank. A centrifugal pump is used to circulate the process hot water through the reheat coils of the air-handling system. Steam taken from the 90-psig header and reduced to 15 psig is used in the heat exchangers. Both systems are equipped with high-temperature and high-pressure relief valves.

All auxiliary equipment in Bldg. 3047 is included in the P&E routine maintenance program and is inspected and serviced regularly.

Air-Handling Equipment

The description and operation of this equipment is given in the section on "Containment."

Jet Eductors

Table 4 describes the jets having service functions in Bldg. 3047. All jets are manually operated except the vacuum booster jet.

Table 4. Building 3047 Jet Eductors

Size and Material	Motive Fluid	Location	Discharge Point	Function
2-in. IPS, 347 stainless steel	Air, atm pressure	Vacuum pump pit	Cell ventilation duct	Booster for vacuum system
3/4-in. IPS, 347 stainless steel	Steam, 60 psig	Vacuum pump pit	Hot drain	Emptying vacuum surge tank, seal water tank, and sump
3/4-in. IPS, 347 stainless steel	Steam, 60 psig	Cell D	Hot drain	Emptying cell ventilation duct sump
3/4-in. IPS, 347 stainless steel	Steam, 60 psig	Cell D	Hot drain	Emptying hot off-gas header sump

CONTAINMENT

The containment zones of the Radioisotope Development Laboratory are shown in Fig. 1, Appendix A. The cells, cubicles, and glove boxes are considered the primary containment, and the portions of the building housing the facilities are considered the secondary containment. The east end of the building is uncontained.

Primary Containment - Cells

The primary volume to be contained is the cell block. Containment of this volume is obtained by means of the structural strength resulting from the concrete and steel construction of the cells and by controls to maintain the cells at a pressure that is always less than the surrounding building.

The physical description of the cells, including service penetrations is given in the section, "Facility Description," subsection "Cell Description." The cells, including windows, doors, and plugs, will withstand static pressures in excess of 600 lb/ft^2 without movement. An accident

that would cause a massive failure of the cell walls is not considered "credible" because of the procedural safeguards described under "Chemical Processing" regarding the type and quantities of reagents used during cell operation.

The cell doors are constructed of laminated steel plate, are lined with 11-gage stainless steel, and are stepped to prevent radiation shine. The doors on cells A, B, and D are 16 in. thick and the door on cell C is 21 in. thick. The doors are suspended on crane-type hinges and, when closed, they seat against a closed cell neoprene gasket. The first (cell side) step in the door threshold is sloped toward the cell and is equipped with a drain to carry off any decontaminating solutions that may be sprayed against the door. The cell floor is 6 in. below the door threshold to prevent the loss of any liquid which might accumulate in the floor. Each cell floor has a nonvalved floor drain to hot drain connection.

Each cell has a three-piece roof plug. In addition, cell C has two separate pieces of armor plate under the concrete plugs to provide the additional shielding designed for this cell. The plugs are arranged so that it is necessary to remove a relatively narrow key plug on each cell before any of the other plugs can be removed. When this key plug is lifted, a circuit is de-energized which permits an in-cell bypass damper to open to provide increased air flow across the opening.

Under normal operating conditions, air enters each cell through a 90% efficiency filter, an automatic flow control valve, and a back-flow preventer. The air leaves the cell by way of an in-cell stainless steel mesh roughing filter and goes through an underground duct to the Isotopes Area Filter Pit, where it passes through a bank of FG-25 roughing filters and a bank of HEPA filters before going to the 3039 stack.

The leakage of air into the cells by paths other than the normal air inlets is minimized by sealing all wall penetrations. The cell doors, when closed, compress a 1/2-in.-thick neoprene gasket to 7/16 in. to prevent air flow through door cracks; the cell roof plug cracks are sealed with oakum and tar; all spare service sleeves are capped both inside and outside the cell; spare service plugs are sealed with putty; the cell window liners are sealed by 20-gage stainless steel flashing welded to the cell liner; the slave arms of the manipulators are fully booted; and the manipulator operating tapes pass through a felt wiper seal in the through tube.

When a cell door or roof plug is open, a bypass damper in the cell air-exhaust duct opens automatically to accommodate the larger flow of air. This air is not filtered in the cell, but it is filtered by the Isotopes Air Filter Pit before going to the 3039 stack. The auxiliary damper ensures an adequate supply of air through the door or roof plug opening. The damper is pneumatically operated and is actuated by contact switches positioned against the cell door and key plugs. The pneumatic damper motors are located outside the cells, and the connecting rod between the motor and damper is sealed both on the inside and outside of the cell wall by a lead-filled rotary seal.

The bypass damper is also used to provide greater air flow capacity when the building goes into containment. In this case, automatic valves open, bypassing the cell air-inlet filters and allowing an increased flow of building air to enter the cells. The in-cell bypass dampers open automatically to exhaust this excess air to the 3039 stack through the Isotopes Area Filter Pit.

The containment system is tested on a monthly basis, and a check sheet (page 45) is completed for each test.

During normal operation, the cells are maintained at 1 to 2 in. w.g. negative pressure with respect to the building pressure. Each cell has a diaphragm-type (Magnehelic) pressure-differential indicating instrument to show the difference between cell and operating corridor pressures. Each cell also has Magnehelic gages on the operating face to indicate the pressure drop across the in-cell roughing filter and on the access side of each cell to indicate the pressure drop across cell air inlet filters. Each cell has a pressure-sensing switch which automatically opens the cell-exhaust bypass damper and puts the building in containment if a cell pressure approaches within 0.25 in. w.g. of operating corridor pressure. All of the cell air-flow controls are of fail-safe design. The loss of electric power and/or compressed air for damper operation will result in the dampers being opened to their fullest extent to provide maximum cell ventilation flow.

Primary Containment - Cubicle (Room 110)

The interior of the cubicle, access port, and access glove box are the primary volumes to be contained. The containment of the cubicle is achieved by a connection to the hot off-gas system and controls to maintain the cubicle at a pressure that is always less than the surrounding operating areas (see Fig. 5, Appendix A).

The cubicle liner, including the viewing window, has been fabricated to withstand static pressures above 5 lb/in.^{2} without failure and a vacuum breaker has been installed to assure that the internal negative pressure does not exceed -1.5 in. water gage. The glove ports are equipped with external metal covers that serve as fire shields.

The vacuum access port is connected to the hot off-gas system and a vacuum system to permit evacuating and purging with argon in order to obtain an inert atmosphere. All controls are of fail-safe design to assure that the cubicle is under negative pressure at all times and that a suitable inert atmosphere is maintained inside the cubicle.

Room 110 is protected against fire by an overhead sprinkler system.

Glove Boxes - Room 105

Two interconnected vacuum glove boxes are located in Room 105. Each box is equipped with a vacuum access port and radioactivity confinement enclosure. The confinement enclosures are attached to the vacuum access ports.

Each vacuum glove box is connected to a vacuum system to permit evacuation and purging with inert gas (see Fig. 6, Appendix A). An oxygen analyzer with a recirculating flow monitors the atmosphere in each box. Under normal operation the glove boxes are exhausted to the cell ventilation system.

The instrumentation provides for safe operation with high and low pressure-sensing units with automatic compensation. A vacuum breaker is also installed in each box as an added precaution against accidental excessive pressurization when the gloves are exposed.

Primary Containment - Glove Boxes - Room 211

Three interconnected glove boxes are located in Room 211 and are described under "Description of Glove Boxes in Room 211".

Each glove box is connected to the cell ventilation system through local high-efficiency filters and through a set of dual high-efficiency filters that are tested regularly. Inlet air to each box passes through high-efficiency filters. Magnehelic gages measure the pressure in each box and the pressure drop across the dual high-efficiency filters. The air flow through each box is measured with a pilot tube equipped with a 5-sec time delay and a local alarm. The time delay is necessary to prevent an alarm due to the movement of the gloves in the box. The flow in each box is maintained to ensure a minimum of one complete volume change every 5 min. The interior of each box is equipped with a fire-sensing unit that is connected to a local alarm and to the monitored panel in Room 109. An overhead sprinkler system in Room 211 protects the exterior of the boxes.

Glove Box - Room 212

One stainless steel vacuum glove box with four gloves and two vacuum access ports is located in Room 212. Each access port is equipped with a confinement enclosure.

The glove box and access ports are connected to a vacuum system to permit evacuation and purging with inert gas (see Fig. 7, Appendix A). An oxygen analyzer monitors the atmosphere in the glove box and two access ports.

High-efficiency filters are installed in all inlet and exhaust lines and are tested regularly.

Under normal operating conditions the glove box exhausts to the hot off-gas system, and pneumatic controls maintain a constant negative pressure. A vacuum breaker is installed in the off-gas-vacuum line to guard against excessive negative pressure when the glove ports are exposed.

The interior of the box is protected from fire by inert gas atmosphere, and the exterior is protected by an overhead sprinkler system in the room.

Building Containment

The portions of the building designed to meet maximum containment standards include the cell block, cell operating and access areas, three hot laboratories on the second floor, and the decontamination room (Room 105) in the central part of Bldg. 3047. Rooms 110, 211, and 212 in the west part of the building operate continuously under contained conditions (-0.3 in. water gage). The portion of the building designed to meet these maximum containment criteria is outlined in Fig. 1, Appendix A.

The air supply system for the building is comprised of three independent units designated as System 1, System 2, and System 3.

System 1

Revised to a recirculating system with high-efficiency filtration. Supplies air for the west end of the building including Rooms 110 and 212, laboratory Room 211, and office Rooms 213 and 111. Rooms 110, 211, and 212 are included in the maximum containment areas of the building. The return air from Rooms 110 and 212 is filtered locally through high-efficiency filters, travels through a bank of roughing filters and a bank of 90% efficiency filters in the Room 315 plenum, and is discharged into a duct-distributor system serving the areas mentioned above. The fan and filter housing for this system is located in plenum 1, Room 315. Automatic dampers are set to prevent the negative pressure in Rooms 110, 211, and 212 from exceeding -0.5 in. water.

Revisions to the system include conversion from 100% makeup to a recirculating system with minimum makeup to maintain a safe and comfortable environment for the operating personnel. The recirculating air is filtered in Rooms 110 and 212 through FG-50 roughing filters and high-efficiency filters.

Rooms 110, 211, and 212 exhaust continuously to the cell ventilation system through FG-50 filters in each room and high-efficiency filters at the Isotopes Area filter point. Each room is maintained at -0.3 in. water gage.

The three rooms are protected from fire by overhead sprinklers and a fire alarm pull box, and Rooms 110 and 212 have hose cabinets. Each room has one door with access to a stairwell and one door accessible to an emergency exit. A vehicle air lock permits vehicle entry to Room 110 through gasketed doors and to Room 212 through a gasketed hatch.

Each room is equipped with a constant alpha air monitor (CAAM) that is connected to the monitored alarm panel in Room 109. Alpha personnel monitors are positioned at each personnel access door, and neutron detectors with built-in alarm are located in each room. A manual switch for emergency use is located in each room and connected to the alarm panel in Room 109.

All operating personnel assigned to Rooms 110, 211, and 212 have had training with the fire control equipment and are experienced in the detection and handling of radioactive materials.

System 2

Supplies air to the central (contained) portion of the building. The air is drawn through a stack on the roof of the building and through a bank of roughing filters and a bank of 90% efficiency filters. Air is also supplied to the System 2 area by two auxiliary fans taking air from the outside through roughing filters and 90% filters and discharging it into the cell charging area, Room 113, and cell top access area, Room 215. The auxiliary fan serving the cell top area operates only when a cell plug is removed; it supplies sufficient air to ensure a 50-ft/min velocity through the cell opening. Air is discharged from the System 2 volume by way of the hoods in Rooms 105, 109, 208, 209, and 210 by way of the four cells and by an exhaust fan on the room. The roof fan exhausts through a bank of roughing filters and a bank of CWS-type absolute filters. When the building goes into containment, the roof exhaust fan and all of the System 2 supply fans shut down and automatic dampers close the ducts going to the outside.

System 3

Supplies air to the office areas, laboratory Room 207, east end storage, and change and equipment areas. These areas are not within the maximum containment zone of the building. The supply fan is located in plenum 3, Room 313. Air is drawn in through a stack on the roof, through a bank of roughing and 90% efficiency filters, and into a duct system serving the System 3 area. Air is discharged from this area by way of the hoods in Room 207 and by an unfiltered exhaust fan on the building roof. When the building goes into containment, the roof exhaust fan shuts down.

The adjoining Isotopes Technology Building (Bldg. 3047A) has its own air supply and exhaust systems, which are entirely independent of those in the Radioisotope Development Laboratory.

The central portion of Bldg. 3047 (served by air supply System 2) can be put into "contained" condition by three methods:

1. Manually by means of a push button located in the southeast entrance way.

2. Automatically by pressure switches located on each cell. These switches are set so that the building goes into containment if any cell comes within 0.25 in. w.g. of the operating corridor pressure. When a cell door or plug is open, the pressure switch for that cell is automatically disconnected from the building containment circuit.

3. Automatically by CAM-type radiation monitoring instruments. There are eight of these instruments tied into the containment circuit, and a radiation signal from at least two instruments simultaneously is needed to put the building in containment. The location of the instruments is shown in Fig. 8, Appendix A.

When the central portion of the building goes into containment, the following things happen essentially simultaneously:

1. An audible and visual alarm is given at a containment panel in the operating corridor, red warning lights flash at all entrances to the containment area, and audible alarms sound throughout the containment area.

2. All of the supplementary building exhaust fans cease operating, and air-operated dampers close the containment area roof exhaust duct. Exhaust which is going by way of the cell ventilation system (hood exhaust and cell exhaust) continues.

3. The air supply fans serving System 2 cease operating, and air-operated dampers seal them off from the outside. The air supply fans serving Systems 1 and 3 continue operating to ensure that these noncontained areas stay at a higher pressure than the contained (System 2) area.

4. The in-cell bypass damper is opened in each cell by an air-operated actuator.

5. The cell air inlet bypass valves open, permitting air to bypass the inlet filters in each cell.

6. When the pressure in the contained portion of the building drops to 0.5 in. w.g. negative with respect to the outside pressures, gravity-operated dampers on the fan inlet ducts begin to admit air to prevent building pressure from dropping any lower. Also, the cell air inlet valves start modulating and reducing the amount of air being drawn into the cells to ensure that the cells are always at least 0.5 in. w.g. below the contained area pressure.

All the damper actuators associated with the containment operations are air actuated and move to the containment condition in the event of an air or electrical failure.

There are no doors which connect directly from the contained area of the building to the outside. Both personnel and vehicles must pass through two doors to enter the contained portion of the building. The vehicle doors are interlocked to permit only one door to be open at a time; the personnel entrances are not interlocked. A remote radiation indicator station is located in the southeast entranceway to indicate the radiation level at each of the CAM's in the contained area. Another indicator station is located in the operating corridor.

The containment of Bldg. 3047 was tested ten times during building acceptance tests with the following average results:

Time for building to reach 0.3 in. w.g. negative	8 seconds
Time for building to reach 0.5 in. w.g. negative	19 seconds
Maximum building negative pressure	0.51 in. w.g.
Pressure differential between cells and building	1.3 in. w.g.

A series of air flow tests was made to check the containment system and to determine the cell-block leak rate. The results of these tests are given in Table 5. The test procedure is outlined in Appendix B. Figure 1 is a plot of the cell-block leak rate determined from the tests.

Table 5. Building 3047 Air Flows

	Air Flow (ft^3/min)		
Conditions	Central Area of Building	Cell Block	Laboratory Hoods
Normal operation	13,210	2432	10,389
Containment operation	15,174	3943	
Cell-block leak rate at 4.95 in. w.g. negative		376 measured	
Cell-block leak rate at 5.4 in. w.g. negative		433 measured	
Cell-block leak rate at 5.5 in. w.g. negative		513 measured	
Cell-block leak rate at 2 in. w.g. negative		150 calculated	

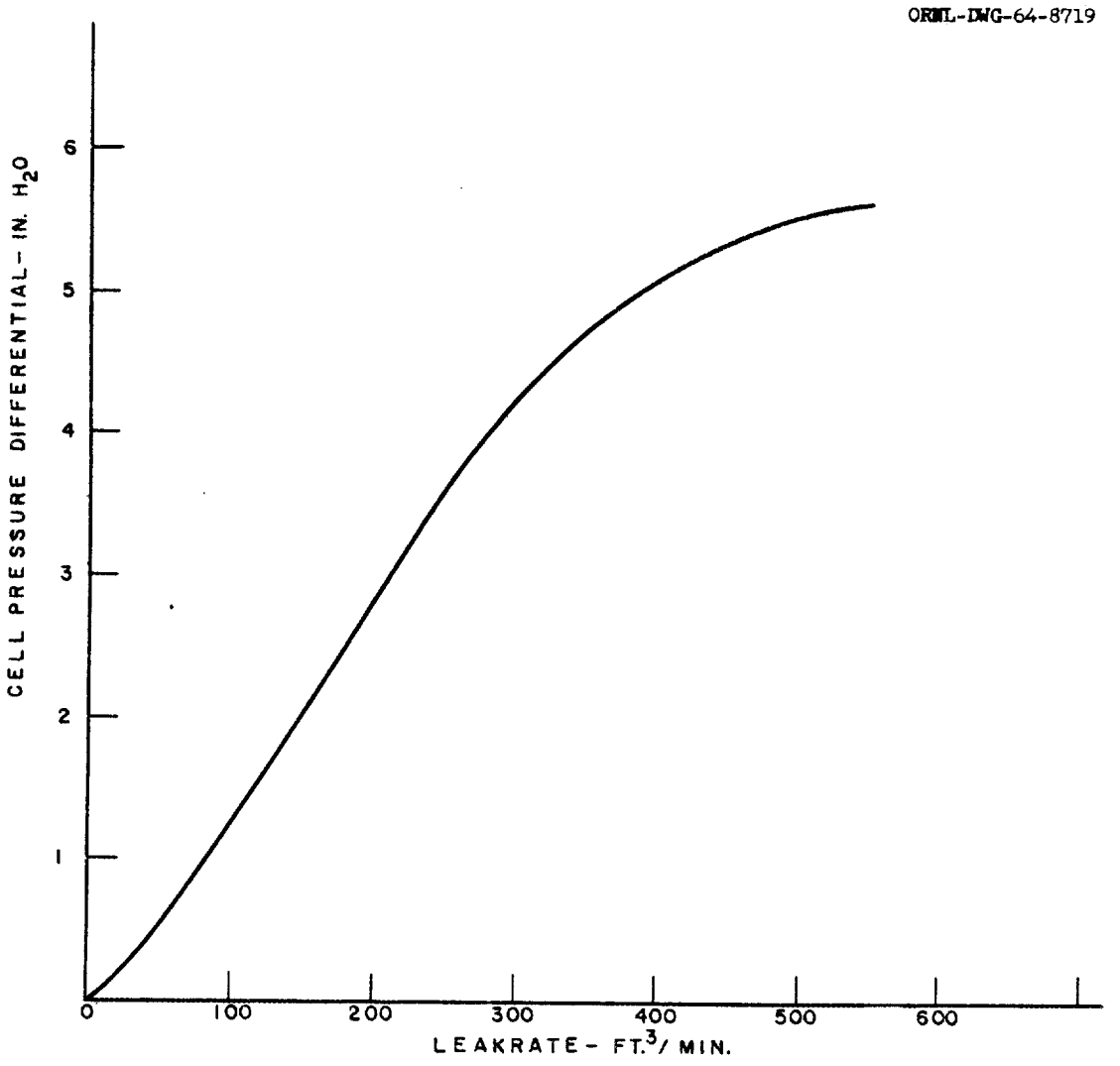

Fig. 1. Cell Block Leak Rate, Building 3047.

CHEMICAL PROCESSING

Since Bldg. 3047 is a research and development facility, there is no standardized routine chemical processing. A wide variety of processes and operations are carried out on an experimental basis, such as solvent extraction, ion exchange, precipitation, and distillation. In addition, mechanical testing of sources is performed in both cells and laboratories.

Feed for the experimental processes may be in the form of purified radioisotopes from other Isotopes Development Center operations, reactor targets, gross fission product waste solutions from fuel processing operations, and fission product fractions separated at other AEC facilities. In addition, it is expected that numerous experiments using nonradioactive solutions or tracer quantities of activity will be performed in the laboratories and engineering area.

A list of all the reagents to be used is not feasible because of the experimental nature of the work. All proposed experiments are submitted to the Isotopes Area review committees for review with particular emphasis on possible side reactions that could be hazardous. The use of flammable solvents in the cells is restricted to quantities not in excess of 1 liter, and the routine use of equipment using natural gas such as furnaces and burners is not permitted in the cells. Compounds which can decompose explosively such as alkali chlorates and ammonium nitrate are not used in the cells in quantities exceeding 1/4 lb, unless they are in solutions known to be safe and to have no chance of being concentrated to dryness.

The chemical processing equipment used in the cells will vary from ordinary laboratory glassware up to multigallon stainless steel process vessels. The total volume of all the process vessels in a cell will not exceed 200 gal in cells B and C and 150 gal in cells A and D. These volumes are less than those that could be held in the cell floor pans (256 gal and 192 gal) without the level of the liquid reaching the door thresholds. Experiments for manipulator cubicle and glove box operation in Rooms 105, 110, 211, and 212 are outlined in writing and submitted to the Isotopes Area review committee for evaluation prior to the installation of the equipment assemblies.

CRITICALITY

There will be no fissionable materials present in quantities that are subject to a nuclear chain reaction. No more than 500 g of ^{235}U and 10 g of ^{239}Pu will be in the building at one time. Some materials such as ^{242}Cm which undergo spontaneous fission decay will be used, but they will not be subject to a nuclear excursion-type incident.

OPERATING SAFEGUARDS

Procedures

Procedures for various service operations have been established and are contained in Appendix C. These procedures are designed only to instruct the individual carrying out the operation. They are not in the form of run sheets nor are they necessarily used as check lists. Deviation from the procedures is not permitted without supervisory approval. New or modified procedures are reviewed by the building supervisor before being put into effect.

Run Sheets

Formal process run sheets are not normally used in the operation of the building due to the experimental nature of the work as contrasted with routine production operations. Each experiment involving radioactive materials, whether in the cells or laboratories, is under the direction of a qualified scientist, and, as noted previously, the experiment is planned and reviewed with particular emphasis on hazards. The scientist may have one or more technicians operating his apparatus, and he will provide them with written or verbal instructions depending on the complexity and hazard of the operation. The technician is not permitted to deviate from these specific instructions unless he obtains permission from the scientist in charge of the experiment. In the case of high level experiments in the cells, the scientist in charge is not permitted to deviate from the planned and approved experiment with respect to chemicals used, temperatures, pressures or other critical conditions without first consulting his supervisor.

Built-in Safeguards

Several built-in safeguards have been designed into the buiding to provide protection in the event of operating error or equipment failure.

Containment System

As mentioned in the section on "Containment," the containment system in addition to manual actuation, will be actuated automatically by any two of eight radiation detection instruments or by pressure switches sensing an inadequate pressure differential between the cells and operating areas. Also, the system will fail in the safe (contained) condition if any utilities operating the system (electricity, air) should be shut down.

Cell Radiation Monitors

A beta-gamma monitron is located behind each cell in line with the cell door so that it "sees" into each cell as the door is opened and will give an audible alarm if there is an exposed source in the cell. Neutron monitors are installed in Rooms 110, 211, and 212 to continuously monitor the areas for excessive neutron radiation.

Constant Air Monitors

Alpha monitors and beta-gamma monitors are installed in all areas where radioactive materials are handled. Selected instruments are connected to the alarm systems of the contained areas.

Neutron Monitors

Neutron monitors with adjustable set-point for an alarm are installed in Rooms 105, 110, 211, and 212.

Vacuum System

The entire vacuum system is constructed of stainless steel, and all vacuum lines coming out of the cells are shielded with a minimum of 12 in. of concrete to provide shielding in case radioactive materials are accidentally pulled into the system. The pump is protected by a 100-gal disengaging tank to provide a volume for dropping out any radioactive materials that might get into the system. The pump, surge tank, and accessory equipment are located in an underground pit with a minimum of 12 in. of concrete shielding. A beta-gamma monitron in the pit provides a reading at the operating panel in the equipment room to indicate if radioactive material has been pulled into the pump system.

Laboratory Hot Drains

All hot drain lines coming from the laboratory areas are shielded with 2 in. of lead to the point where they go underground. The annular lead shields are equipped with drains to permit the draining of any liquid that would collect if one of the hot drain lines developed a leak.

Air Handling

The building air supply is broken into three separate systems to minimize the possibility of contaminating the whole building from an incident in one section of the building. The air intakes are equipped with 90% efficiency filters to provide protection against contamination resulting from an incident outside the building.

Cell Floor Drains

The cell floor drains are not valved and have no covers to ensure that they will be open when a cell is being washed down. They are equipped with removable water-sealed traps to prevent the back flow of contaminated air.

Back-flow Preventers

Back-flow preventers are provided on all cell air inlets and on all cell ventilation headers tying into the main building cell ventilation duct. All above-ground building cell ventilation lines are of stainless steel, all-welded construction; the underground headers are of concrete.

Hot Hoods

The walls behind the hot hoods in the three hot laboratories have 4-in.-thick lead panels to ensure that a source placed in a hood in one laboratory will not irradiate an individual in the next room.

Inter-cell Plugs

The 4-in. stepped plugs in the walls between cells are located 6-1/2 ft above floor level to ensure that an individual entering one cell will not be in line of sight of a source in an adjoining cell even if he forgot that the inter-cell plugs were open. The inter-cell walls provide a full 3 ft of barytes concrete shielding.

Alarms

The following visual and/or audio alarms are provided in the building:

1. Containment system actuated
2. Low cell pressure differential
3. High level, hot off-gas sump
4. High level, cell ventilation sump
5. Inter-cell conveyor in or entering an open cell
6. Laboratory evacuation alarm
7. Fire alarm
8. Radiation monitor alarms
9. Vacuum system mal-operation alarm
10. Chilled water temperature alarm
11. Air supply ductstat temperature alarm
12. Low building voltage alarm
13. High-temperature sensing unit alarm

Procedural Safeguards

In addition to the procedures previously mentioned, the following regulations are in force in the building:

1. Electrical maintenance is done only when the appropriate circuit breaker is tagged out.

2. Entrance to a cell is not permitted until a Health Physics survey has been made.

3. All maintenance and set-up work in a cell requires a standard Radiation Work Permit and an observer.

4. Lead burning and welding work requires a standard Burning Permit.

5. Technicians and operators are not permitted to experiment on their own.

6. Laboratory regulations regarding the tagging of equipment, carriers, and samples are strictly followed.

7. Modification of building services and service equipment is not permitted except as specifically authorized by the Department Supervisor. Procedural changes may only be authorized at the Department Supervisor level or higher.

Building Services and Equipment Maintenance

The service equipment in Bldg. 3047 is on the Routine Maintenance System administered by the Plant and Equipment Division. This includes a routine inspection of machinery components on a schedule based on Plant and Equipment Division experience with similar equipment, lubrication of moving parts, tightening or replacing valve packings, etc. In addition, all equipment associated with the containment system is tested at least once a week. Pressure drop gages are connected across all filters in the building to provide an indication of when the filter should be changed. Filters are replaced on request by the Plant and Equipment Division as is all nonscheduled maintenance.

PERSONNEL EXPOSURE

Maximum Curie Load

It is expected that virtually all radioisotopes below uranium, as well as a few transuranium elements, will be handled in varying amounts in Bldg. 3047. The isotopes representing the greatest amounts of activity, as well as hazard, in the building are given in Table 6.

The distribution of the downwind dose normalized to a 1000-Ci stack release and stable atmospheric conditions is plotted in Fig. 2. The calculation method used for Table 6 and Fig. 2 is given in Appendix D. The values in Table 6 are based on the assumption that the Isotopes Area Filter Pit is 99.95% efficient in removing particles sized 0.3 μm and larger as shown by the dioctylphthalate (DOP) test. The values can be adjusted for other filter-efficiencies by multiplying by the factor:

$$\frac{(0.988)(1 - \text{filter DOP efficiency}) + 6.8 \times 10^{-4}}{11.74 \times 10^{-4}}$$

Table 6. Hazards Summary - Building 3047

Isotope	Maximum Inventory (Ci)			Maximum Credible Accident Results		
	In Plant	In Cell	In Dispersible Form[a]	Stack Discharge[b] (Ci)	Downwind Dose[c] (millirem)	Maximum Contaminated Area[d] ($mile^2$)
Strontium-90	1×10^6	2.5×10^5	2.5×10^3	0.6	1.2×10^2	3.4
Cerium-144	1×10^6	1×10^6	5.0×10^4	11.7	3.14×10^1	18
Promethium-147	1×10^5	5×10^4	5×10^3	1.2	0.3	1.8
Cesium-137	5×10^5	1.25×10^5	1.25×10^4	2.9	4.6	4.5
Mixed fission products[e]	2.5×10^4	2.5×10^4	2.5×10^4	5.8	1.4×10^1	9.0
Cobalt-60	6×10^4	6×10^4	1×10^3	0.2	0.4	0.4
Curium-242	4×10^4	4×10^4	4×10^3	0.9	1.4×10^2	45
Curium-244	3.2×10^4	3.2×10^4	3.2×10^3	0.7	1.8×10^3	35
Americium-241	3.21×10^2	3.21×10^2	3.21×10^2	0.07	1.1×10^2	3.5
Uranium-235	1×10^{-3}	1×10^{-3}	1×10^{-3}	2×10^{-7}	3×10^{-8}	1×10^{-5}
Plutonium-239	6.13×10^{-1}	6.13×10^{-1}	6.13×10^{-1}	1.2×10^{-4}	0.96	6×10^{-3}

[a] In solution or a nonencapsulated dispersible solid.
[b] Based on 20% of dispersible inventory reaching the Isotopes Area Filter Pit.
[c] Total integrated (lifetime) dose assuming proper filter operations; ORNL-TM-16.
[d] Contaminated to greater than 30 dis/min·dm^2 alpha or 1000 dis/min·dm^2 beta, gamma assuming proper filter operation.
[e] Six months' decay containing 760 Ci ^{90}Sr ($MPCa_{40} = 6.6 \times 10^{-9}$ $\mu Ci/cm^3$).

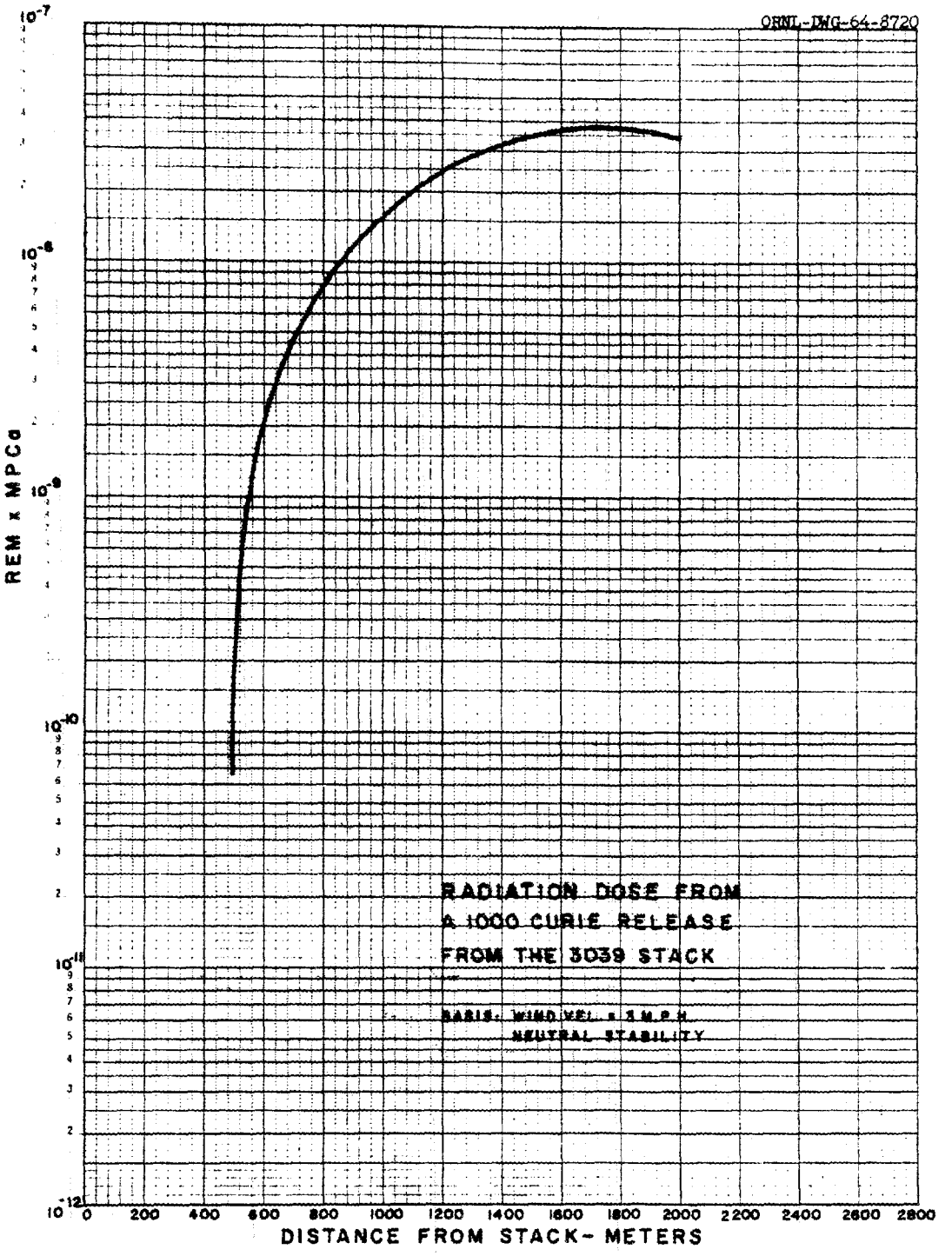

Fig. 2. Radiation Dose from a 1000-Ci Release from the 3039 Stack.

A plot of these correction factors to be used with Table 6 is given in Fig. 3. The downwind dose and contaminated area values given in Table 6 represent the maximum credible accident for the facility, because they are based on the assumption that the entire dispersible inventory of a cell becomes airborne and 20% of this activity reaches the Isotopes Area Filter Pit. The leakage of activity from the cell and building will be insignificant compared to the stack release. An accident which breeches the cell block is not considered credible because of the previously mentioned limitations (page 19) on the quantities of potentially explosive materials allowed in the cells.

The maximum dose to personnel in the building due to overpressurization of the cells will depend largely on the length of time the cell is pressurized and the pressure level. Assuming an accident that releases about 100 ft^3 of hot gas (~3 lb TNT) in 0.5 sec to one of the cells, it can be calculated (Appendix D) from the cell-block leak rate data plotted in Fig. 1 that 2.7 ft^3 of gas will escape to the containment zone of the building. The doses received by personnel in 2 min while evacuating the building were calculated (Appendix D), assuming that this gas carried 10 mg/m^3 of radioactive dust (equivalent to a very dense fog) which mixes uniformly with the air in the containment zone, and are shown in Table 7 for the radioisotopes of significance.

Table 7. Maximum Credible Accident Dose to Building Personnel

Isotope	Personnel Dose in 2 min (millirem)
Strontium-90 as titanate	91.5
Curium-242 as oxide	12,050
Curium-244 as oxide	53.5
Americium-241 as oxide	121
All other radioisotopes to be handled	<50

Building Personnel

The planned staff normally having offices or work areas in Bldg. 3047 consists of 9 scientists and 7 technicians. Normally, all of these people will be working straight days, but on occasion there may be shift work in connection with a particular experiment or program. It is possible, but not probable, that all these people can be in the contained portion of the building at the same time. The building has an additional office for one Health Physicist who will carry out the health physics

ORNL-DWG-64-8721

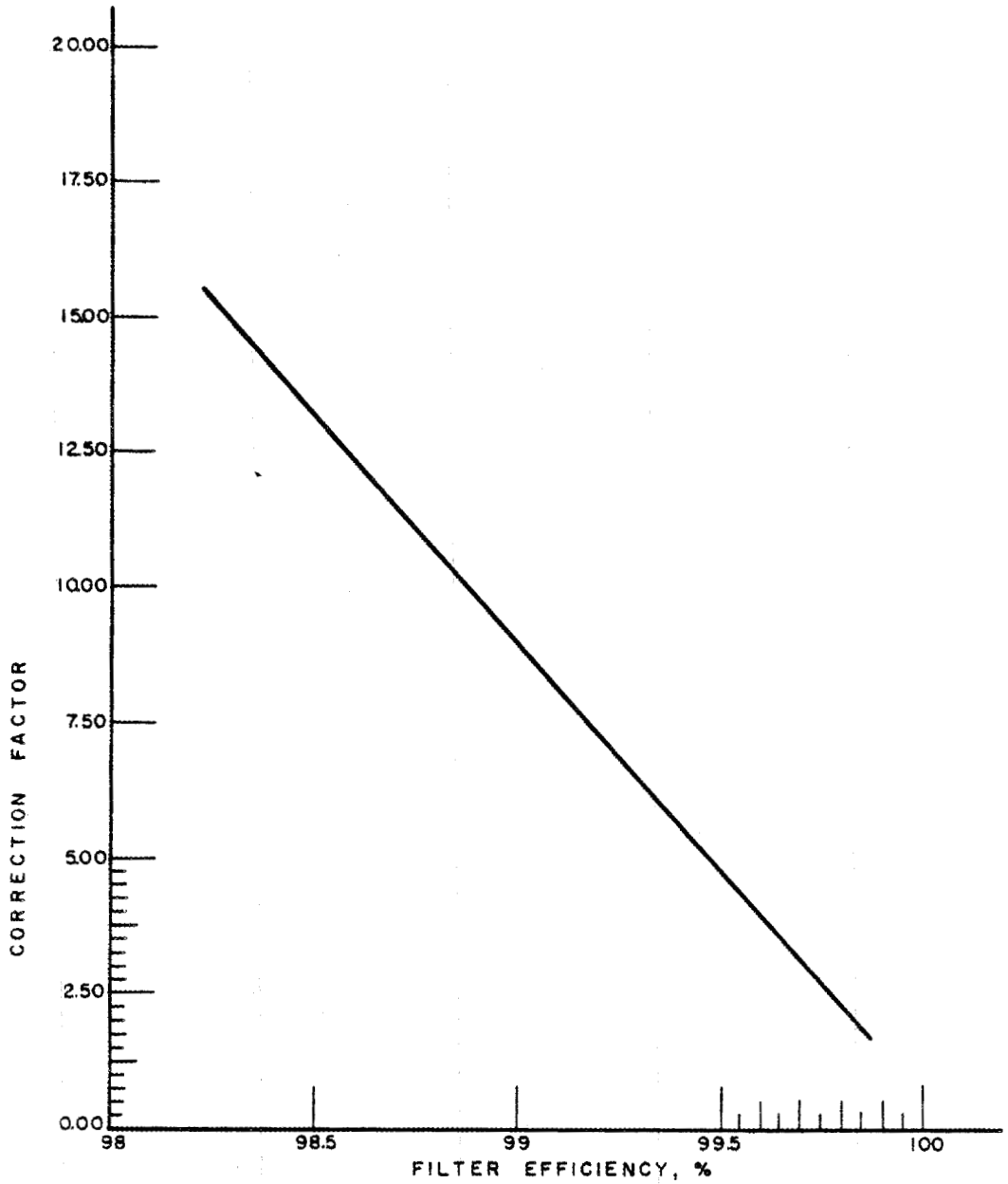

Fig. 3. Filter Efficiency Correction Factors.

functions for Bldgs. 3047, 3028, and 3029. Normally, it is expected that there will also be present two or three Plant and Equipment Division employees doing maintenance work or setting up equipment as well as one or two visitors not assigned to the building.

RADIATION AND CONTAMINATION CONTROL

The fixed radiation instruments in Bldg. 3047 are listed in Table 8. The locations of the instruments in the building are indicated in Fig. 8, Appendix A.

Table 8. Building 3047 Radiation Instruments

Type	Quantity	Testing Frequency	Type of Activity Detected	Containment Alarm Setting
β,γ CAM (Q-2240)	9	Daily - HP	β,γ particulate	1800 counts/min
γ monitrons (Q-1154)	5	Daily - HP	γ	None
β,γ personnel monitors (Q-2091)	10		β,γ	None
α CAM (Q-2340)	7	Daily - HP	α particulate	600 counts/min
Neutron Monitors	3	Daily - HP	fast neutron	None
α personnel monitors (Q-2270)	7	Daily - HP	α	None

In addition to the fixed instruments, there are ten portable soft-shell Cutie Pie Survey Meters and nine portable G-M Survey Meters with ~1-mg/cm^2 end-window probes for detecting weak emitters such as ^{99}Tc and ^{147}Pm. A Survey Meter with an appropriate probe is located at each routine personnel exit in the containment zones, and there is a sign on the door to instruct all personnel to monitor their feet before leaving the areas. Nine portable (Q-2091) personnel alpha monitors are located in the building. Three fast-neutron monitors are used in Rooms 105, 110, 211, and 212 as required. Four portable fast-neutron monitors and two portable thermal-neutron monitors are available in the Health Physics office. The containment areas are spot smeared daily by Health Physics, and the entire building is given a comprehensive smear check once a week. Cell areas are roped off and covered with blotting paper before entry as described in the Cell Entry Procedures in Appendix C.

LIQUID WASTES

Low-Level Radioactive Waste

The building connections to the low-level waste system (process waste system) are:

1. All laboratory sink, bench, and hood drains.
2. Cooling water (not seal water) for vacuum pump.
3. All building floor drains.
4. Process drain connection in each cell — normally capped unless directly connected to a particular piece of experimental equipment for the discharge of cooling water or steam condensate.
5. Fan plenum chamber drains.
6. All steam condensate traps.
7. High-pressure steam condensate flash tank.
8. Chilled-water system drain including cooling tower.

The process drain system in the building is constructed of Duriron pipe except for those portions in the cells which are stainless steel. The process waste leaving the building ties into the existing Isotopes Area process drain system which flows directly to the settling basin with no intermediate hold-up tanks in the line. There are no cross connections between the process waste system and the hot waste system. The process waste stream from the building is not separately monitored or measured. Under full operating conditions, the total process waste flow should not exceed 10,000 gal/day.

Hot Waste

The building connections to the hot drain system are:

1. Floor drains in each cell
2. One hood drain from each laboratory
3. Hot off-gas sump jet discharge (via collection tank and Cell D floor drain)
4. Cell ventilation sump jet discharge (via collection tank and cell D floor drain)
5. Vacuum pump surge tank, jet discharge
6. Vacuum pump seal water tank, jet discharge
7. Vacuum pump sump, jet discharge

8. Capped-off connection in Room 110
9. Capped-off connection in Room 105
10. Carrier transfer line trench drain
11. Conveyor cubicles floor drains
12. Cubicle in Room 110

All hot drain lines in the building are shielded with at least 12 in. of concrete or its equivalent and are constructed of Type 304L schedule 80 stainless steel pipe. All joints are welded and have been radiographed, and the system has been pressure tested at 100 psig.

The hot drain header leaves at the west end of the building and ties into the existing Isotopes Area Hot Drain System which discharges into the WC-10 tank. This tank is sealed and approved for all types of radioactive liquid waste. The hot waste leaving Bldg. 3047 is not separately measured or monitored. During normal operation, the volume of hot waste from Bldg. 3047 should not exceed 400 gal/day. During periods of cell decontamination, however, 2000-3000 gal/day may be discharged through the hot drain system.

The bulk of the hot waste will consist of aqueous solutions of various salts and nitric acid that are not unduly corrosive to stainless steel. Normally, the waste will contain only beta and gamma activities and will not exceed 10 Ci/liter. Small amounts of alpha activity ($\sim 10^5$ alpha counts/min·ml) may occasionally be discharged into the hot drain system.

Storm Sewer

The only connections from Bldg. 3047 to the storm sewer system are the building roof drains, the cooling tower pan overflow and dump line, and the vacuum furnace cooling systems in Rooms 113 and 212. Neither the lines nor the pieces of equipment are connected with any radioactive process or drain facilities.

GASEOUS WASTE

Hot Off-Gas System

Hot off-gas service enters the west end of the building underground through a 4-in. stainless steel header which is connected to the existing Isotopes Area 6-in. off-gas main. One 2-in. line to each of the four cells and one 3-in. line to the chemical engineering area are the only hot off-gas service outlets in the building. The pressure on the building header normally runs about 30 in. w.g. negative. There is no automatic pressure control on the building header, but local pressure regulators may be installed in connection with a specific experimental setup where constant off-gas pressure is required.

There are no scrubbers or filters installed as permanent equipment in the building hot off-gas system. Temporary scrubbers and filters are installed as part of an experimental setup when there is a possibility of corrosive vapors or a significant quantity of radioactive particulate getting into the off-gas header. The hot off-gas is scrubbed and filtered at the 3039 stack area facility prior to being discharged.

The hot off-gas header in Bldg. 3047 is below the elevation of the Isotopes Area hot off-gas and hot drain headers. Any liquid which gets into the building header flows by gravity to a sump located in the line under cell D. The sump will hold about 4 gal before the liquid starts backing up into the header. The sump is equipped with an air purge type liquid level instrument which trips a pressure switch and sounds an alarm on the operating corridor panel when the sump is 2/3 full. A manually operated steam jet is then used to transfer the sump contents to the hot drain.

In the event the hot off-gas sump alarm failed to function, water would back up in the header until it reached the point where it would start draining in the existing Isotopes Area hot off-gas system to hot drain. The maximum liquid head in the line under these conditions would be 14 in. which, being less than the normal 30 in. w.g. on the header, would not completely shut off the flow of off-gas from equipment in the cells unless some other pressure restricting device was in the line. All of the off-gas service outlets in the building are well above the maximum height that liquid would rise in the header.

CELL VENTILATION SYSTEM

The building cell ventilation main header comes off the Isotopes Area header and enters the building on the southwest corner as a 36-in. concrete pipe. In the building, cell ventilation service is provided for all hoods both in the containment and noncontainment portions of the building, each of the four cells, and the vacuum pump pit. The pressure in the header is normally 4-6 in. w.g. negative and the pressure in the cells is normally at least 1 in. w.g. negative. The dampers on the hoods are manually adjusted to give a 100-ft/min face velocity when the hood is one-fourth open. Back-flow preventers are installed on all branches of the system except those serving the four cells.

Air leaving by way of the radioactive hoods passes through a CWS-type absolute filter located in a housing on top of each hood and then goes to the Isotopes Area Filter Pit where it passes through a bank of roughing filters and a bank of CWS-type filters before going to the 3039 stack system. Air leaving by way of the chemical hoods and the vacuum pump pit is not locally filtered, but is filtered by the Isotopes Area Filter Pit before going to the stack system. Air leaving by way of the cells passes through a stainless steel mesh roughing filter approximately equivalent to an FG-25 and then goes through the roughing and absolute filters in the Isotopes Area Filter Pit before going to the stack system. Air entering the cells under normal operating conditions passes through 90%

efficiency filters. During emergency conditions, both the air inlet filters and the stainless steel mesh in-cell exhaust filters are bypassed.

Normal air flow through cells A, B, and D is 600 ft^3/min and 1700 ft^3/min through cell C. When a cell door or top plug is opened, the in-cell stainless steel mesh filter is bypassed, and the air flow to the cell ventilation duct automatically is increased to provide a minimum air velocity across the cell opening of >50 ft/min.

All filters, both in the building and at the Isotopes Filter Pit, have pressure-drop measuring instruments installed across them to indicate when changing is required. The in-cell stainless steel mesh filters can be remotely washed down when they become loaded.

The cell is considered as the primary containment for most beta and gamma work that is carried out in the building. Most of the alpha work is done in an in-cell alpha box which is then considered as the primary containment. All of the automatic control devices on the cell air handling system are of fail-safe design with respect to a building electrical or instrument air failure. They will provide maximum cell ventilation capacity in the event of failure of these control services.

The vacuum pump exhaust is discharged into the cell ventilation system, and any gross contaminants are removed by the previously described surge tank and water-sealed pump.

The cell ventilation header is at an elevation below the Isotopes Area header and below the hot drain header. This problem is handled by providing a 6-gal sump in the low point of the line under cell D. The sump is equipped with an air purge level instrument which sounds an alarm on the operating corridor alarm panel when the sump is two-thirds full. A manually operated steam jet is used to empty the sump to hot drain. The hydrostatic head, which would exist if the sump alarm failed to function and the header filled with water, would be 18 in. w.g. and would be sufficient to cut off cell ventilation. This is not considered a credible possibility because a rapid buildup of water in the header cannot occur unless a cell flooded to a depth of 14 in., permitting water to run into the cell ventilation opening in the cell. At the same time, there would have to be a cell ventilation duct pressure surge to close the back-flow preventer on the duct serving the vacuum pump pit in order that the water would fill up the header rather than run back into the pump pit and sound the pit sump alarm.

SOLID WASTE

Radioactive solid wastes from the building consist of contaminated experimental apparatus, wipes, and small process vessels. Small items such as wipes, handling tools, and small glassware are placed in 1-gal waste cans and transported by the inter-cell conveyor to cell B. The can is then enclosed in plastic and placed in a waste transfer cask and transferred

to the burial ground for disposal. Any item larger than 12 by 12 in. or weighing over 50 lb cannot be handled in the inter-cell conveyor and will have to be decontaminated in the cell to a point where it can be removed through the cell door or top plug and placed in a hot dumpster. Before a cell door or top plugs are opened, health physics surveys are always made by using a long probe introduced through one of the plug sleeves or a survey meter introduced via the conveyor. All waste carriers are monitored and properly tagged by health physics before being sent to the burial ground. The standards outlined in the Radiation Safety Manual are strictly followed. Alpha-contaminated wastes are bagged out of the in-cell alpha box before being placed in the approved containers. In some cases, an entire in-cell alpha box may be disposed of by placing it in a large plastic bag, removing it through the cell door, and putting it in a steel container for storage or disposal.

Standard laboratory hot waste cans lined with a plastic bag are used to contain low-level solid wastes from the hot laboratories. When the can is full, the top of the bag is taped shut, the top of the can is taped in place, and the can is tagged with a transfer tag giving the radiation reading. Cans reading up to 200 mR/hr beta-gamma at the surface are transferred to the Isotopes Area shielded dumpster for routine disposal. If a can has a reading of >200 mR/hr, it is disposed of immediately by making a special call for the hot truck. Cans reading <6 mR/hr are emptied into a dumpster outside the building.

All transuranium solid waste is handled according to the Interim Procedure for Storage of Transuranium Solid Waste, dated October 10, 1970.

PROCESS HAZARDS

Since Bldg. 3047 will not be used for any routine production operation, it is not possible to evaluate the hazards of specific processes which describe the activities being carried out from week to week.

Structurally, the cell block, including the windows, will withstand a sudden overpressure in excess of 600 lb/ft^2 without any type of failure of movement. If needed, an exhaust capacity of 4400 ft^3/min can be obtained from the cells alone and >15,000 ft^3/min from the total building. The building structure will withstand a sudden overpressure of 5 psig without any massive failure and without damage to the emergency air handling equipment and controls. Total hot off-gas capacity available to the building amounts to 600 ft^3/min. These building parameters along with others mentioned elsewhere in this report are used to establish the maximum quantities of chemicals that can be used in a particular experiment when the proposed experiment is reviewed. This review procedure, coupled with strict adherence to operating procedures, is expected to prevent any type of incident involving an unexpected chemical reaction.

APPENDIX A

Figure No.	Title
Fig. 1	Building 3047 - Building Plan.
Fig. 2	Building 3047 Evacuation Route and Plot Plan.
Fig. 3	Radioisotope Development Laboratory - Isometric.
Fig. 4	Cell Section - Typical Cells A, B, and D.
Fig. 5	Cubicle Instrumentation - Room 110.
Fig. 6	Glove Box Instrumentation - Room 105.
Fig. 7	Glove Box Instrumentation - Room 212.
Fig. 8	Building 3047 - Air Flow.

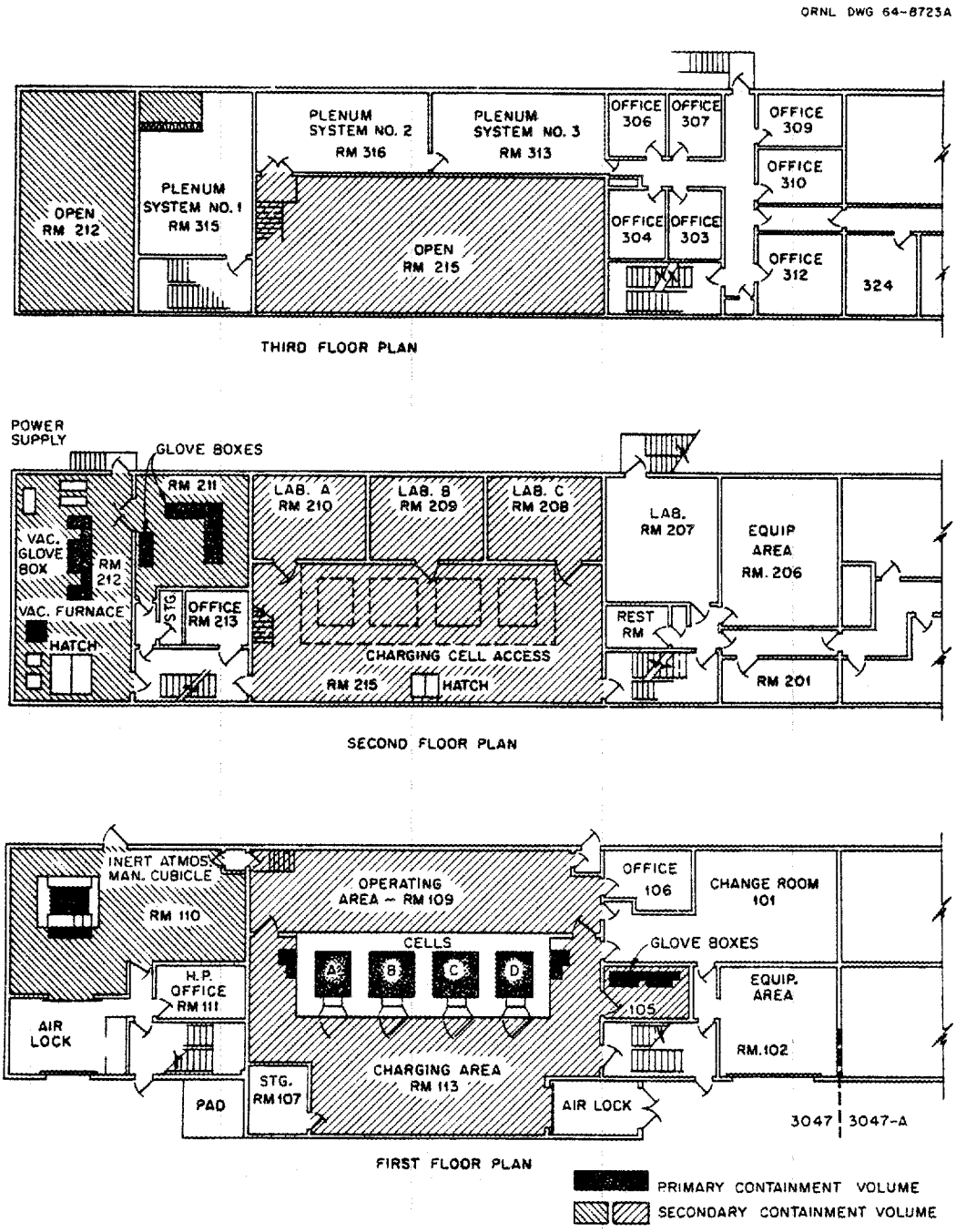

Fig. 1. Building 3047 - Building Plan.

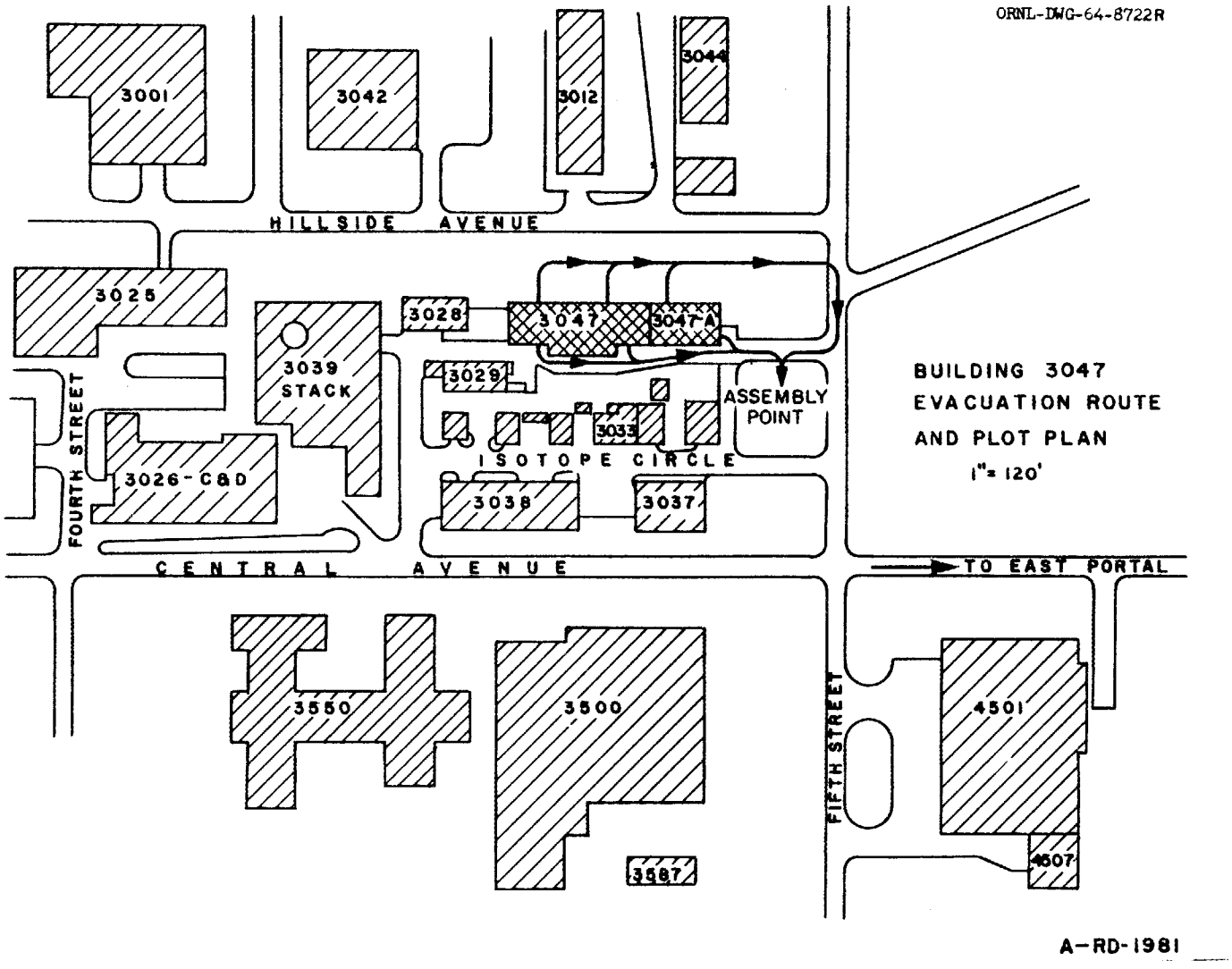

Fig. 2. Building 3047 Evacuation Route and Plot Plan.

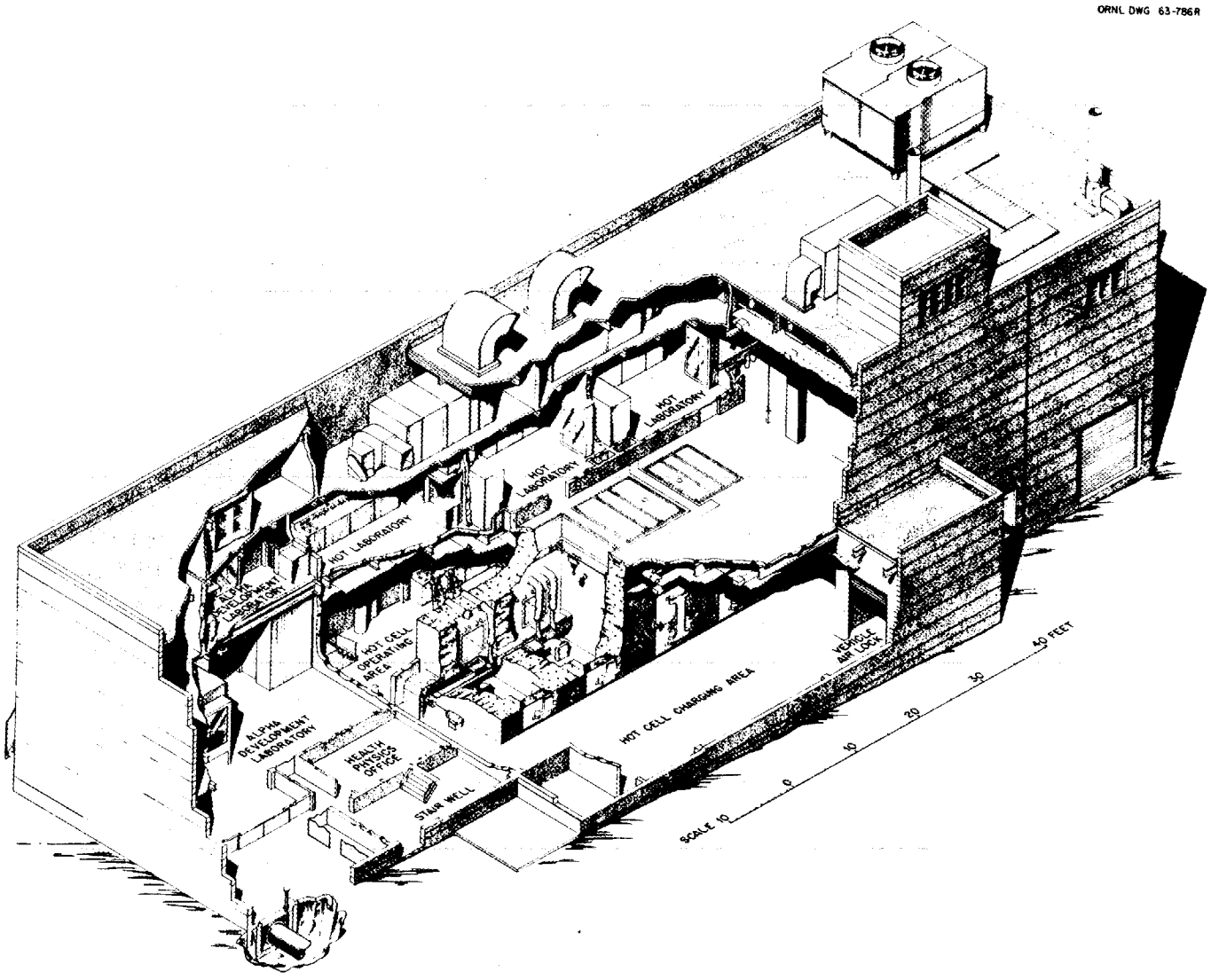

Fig. 3. Radioisotope Development Laboratory - Isometric.

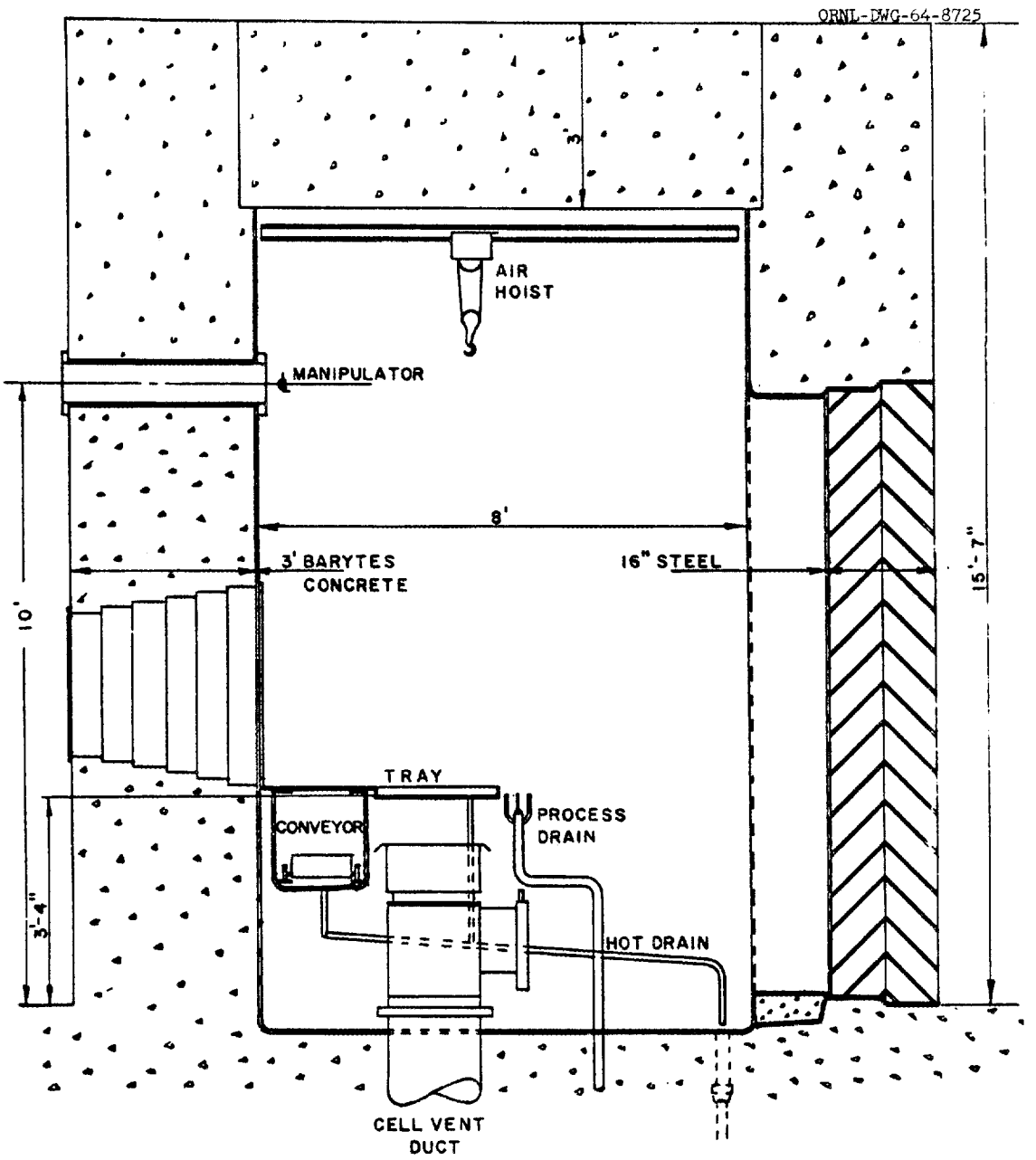

Fig. 4. Cell Section - Typical Cells A, B, and D.

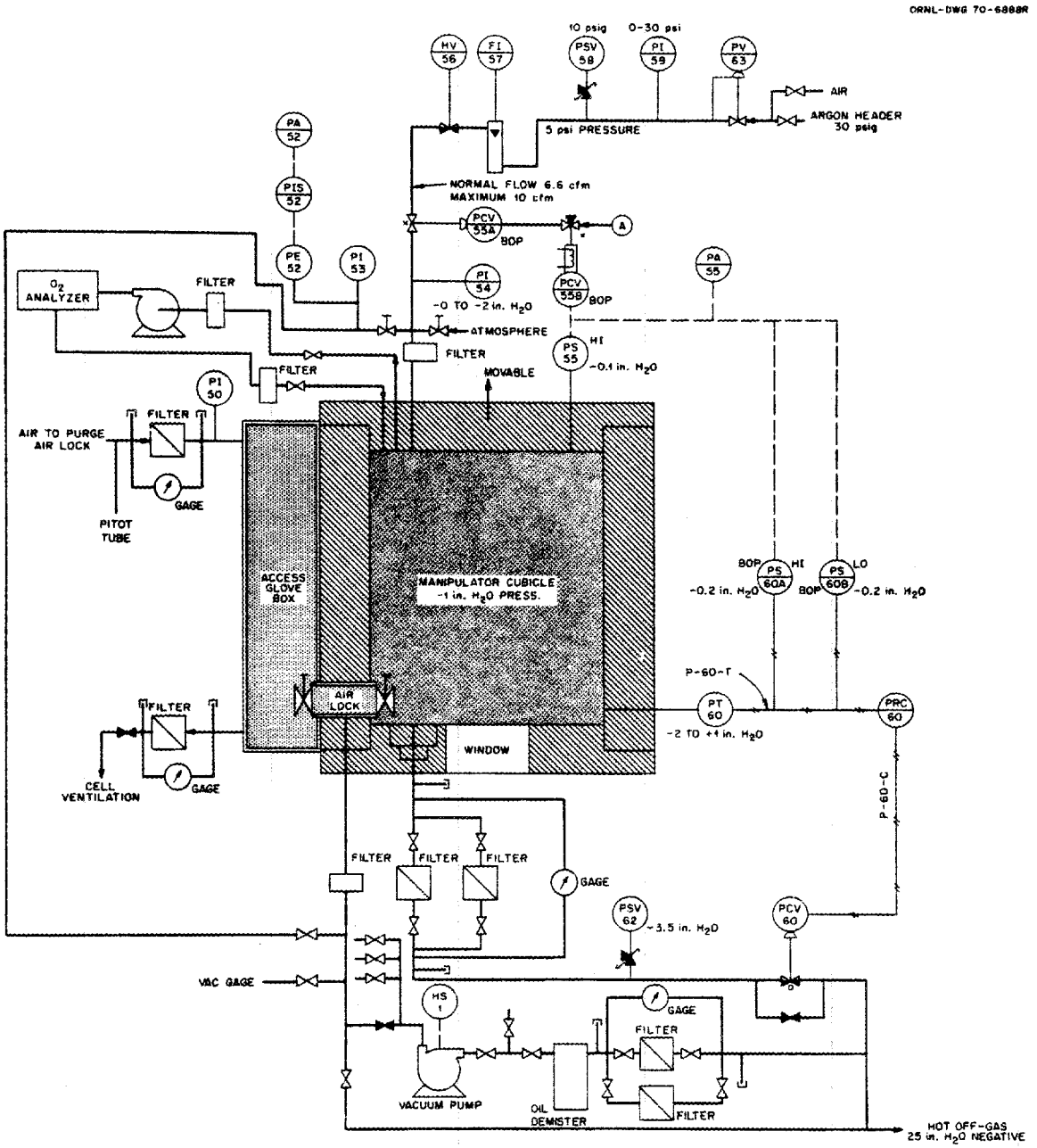

Fig. 5. Cubicle Instrumentation - Room 110.

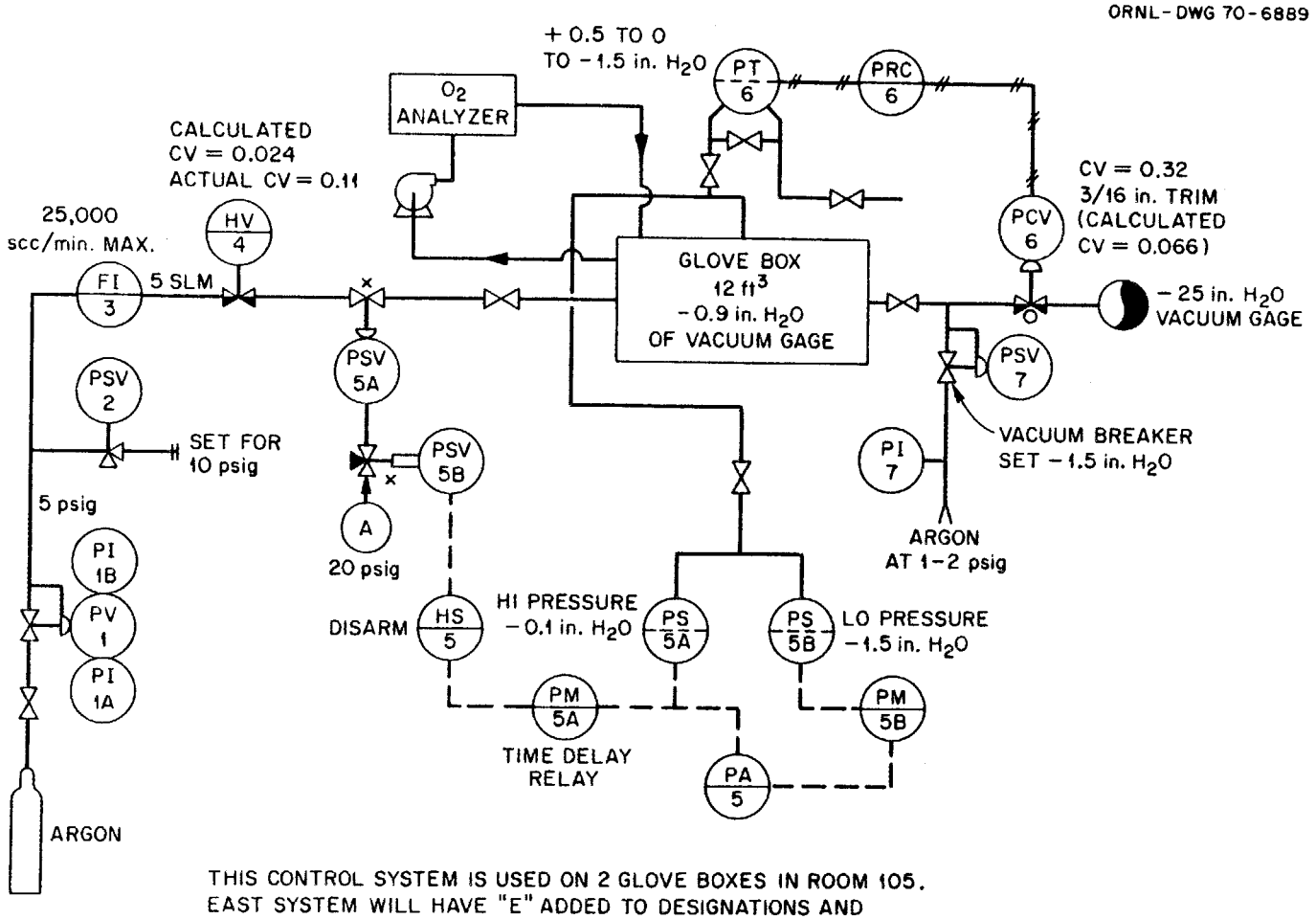

THIS CONTROL SYSTEM IS USED ON 2 GLOVE BOXES IN ROOM 105.
EAST SYSTEM WILL HAVE "E" ADDED TO DESIGNATIONS AND
WEST SYSTEM WILL HAVE "W" ADDED.

Fig. 6. Glove Box Instrumentation - Room 105.

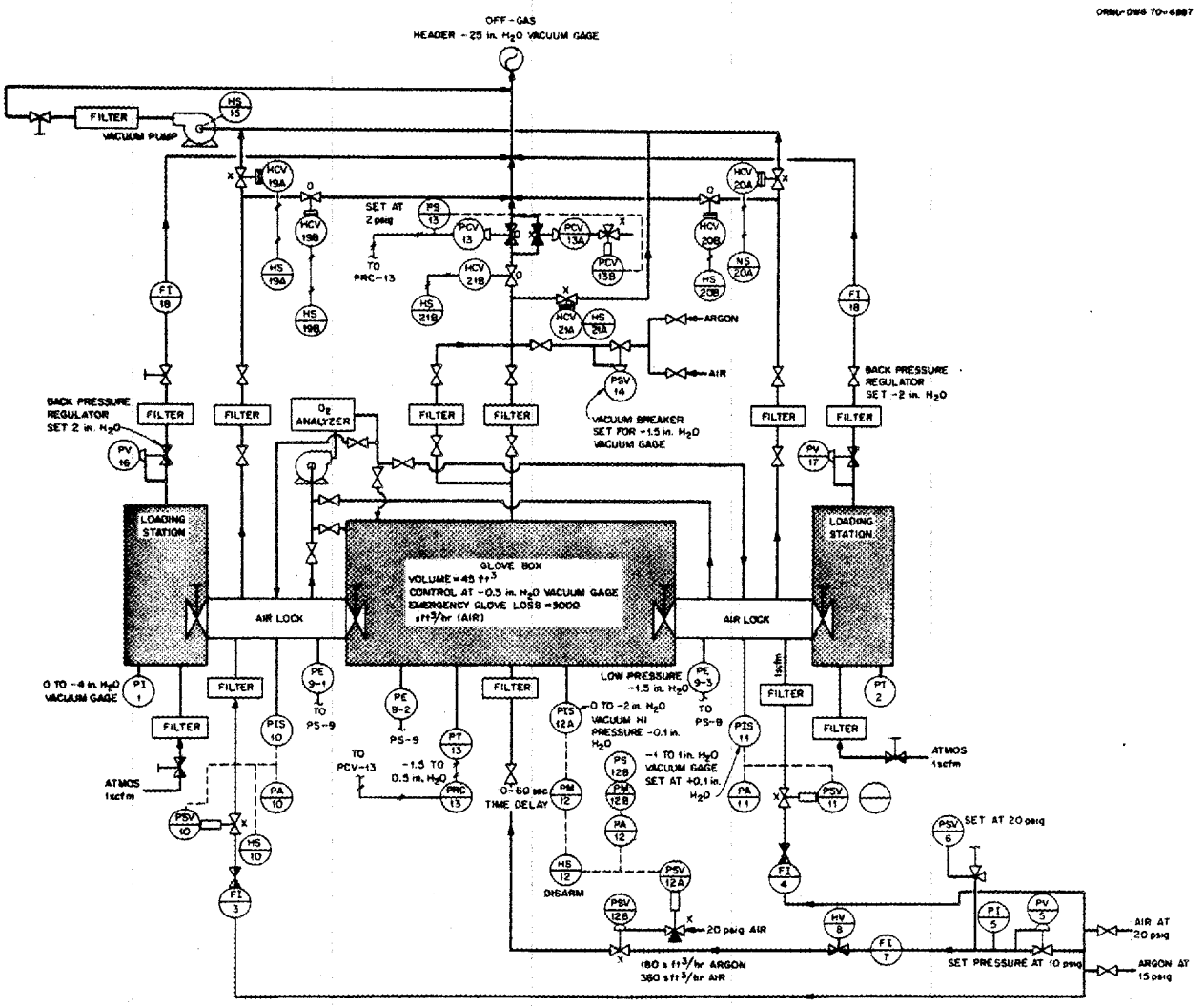

Fig. 7. Glove Box Instrumentation - Room 212.

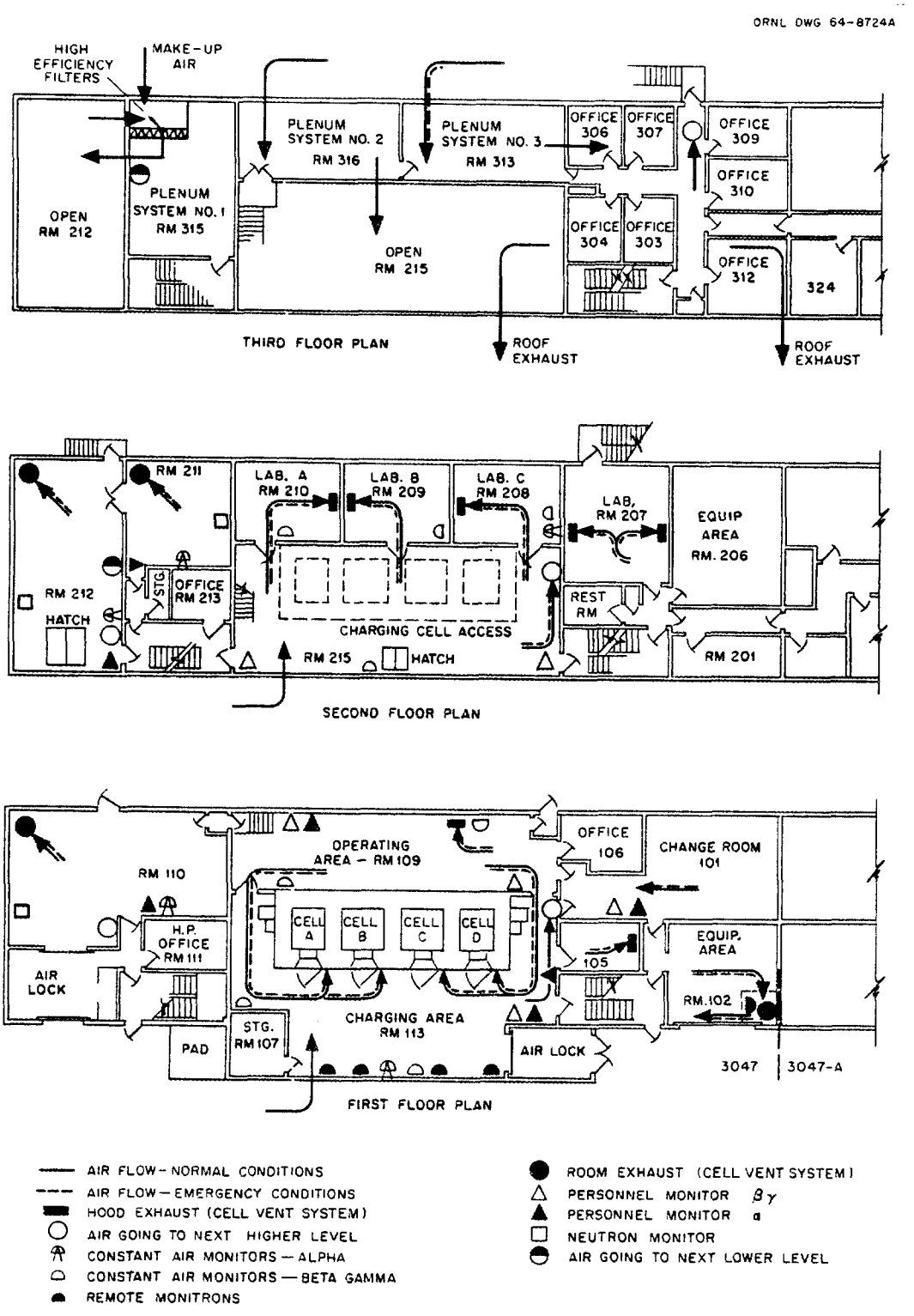

Fig. 8. Building 3047 - Air Flow.

APPENDIX B

AIR FLOW TEST PROCEDURES

Containment System Testing

Weekly Test

1. Advise building personnel over the speaker system that the containment system is being tested.

2. Put the building in containment using the manual button in the southeast stairwell and check the following items:

   a. The pressure in the cell-operating and access areas drops to at least 0.3 in. w.g. negative within 20 sec or less.

   b. The audio and visual alarm in the operating area is functioning. Silence the audio alarm.

   c. The pressure in the operating and access areas does not drop lower than 0.55 in. w.g. negative.

   d. The cell air inlet bypass lines are open.

   e. The air supply fan in Plenum 2 has stopped operating.

   f. The damper on the Plenum 2 air supply duct is closed.

   g. The air supply fans in Plenum 1 and 3 are still operating.

   h. All roof exhaust fans have stopped operating.

   i. The duct damper on the contained area exhaust fan on the roof has closed.

   j. The motor operators on the cell emergency exhaust dampers indicate that the dampers are open.

   k. The cell negative pressure gage shows at least 0.5 in. w.g. negative with respect to the operating area and is not more than 2.0 in. w.g. negative.

3. Put the building back in the normal operating condition by pushing the reset button on the operating corridor panel.

4. Put the building back in containment by alarming two CAM's at the same time.

5. Put the building back in normal operating condition.

If any of the above items are not operating properly, notify building supervisor.

Quarterly Test

Once each quarter, in addition to the items listed above, put the building into containment by loosening the low-pressure connection to the containment pressure switches located on the operating face of the cells. Do this for each cell.

Building 3047 Monthly Containment Check

Date _____ Checked by _____

1. Method used to place building in containment: _____
_____

2. Operating area: Seconds to reach 0.3 in. w.g. negative . . . _____

3. Charging area: Seconds to reach 0.3 in. w.g. negative . . . _____

4. Final w.g. negative pressure reached: Operating area . . . . _____
Charging area . . . . _____

5. Alarms operating:

   a. Air handling panel . . . . . _____
   b. Edwards annunciator . . . . . _____
   c. Southeast stairwell – 2nd floor . . . . . _____
   d. Southwest stairwell – 2nd floor . . . . . _____
   e. Room 215 . . . . . _____
   f. Room 113 . . . . . _____

6. Lights operating:

   a. Air handling panel . . . . . _____
   b. Personnel access from Room 110 . . . . . _____
   c. Personnel access from southwest stairwell – 2nd floor . . _____
   d. Personnel access from southeast stairwell – 2nd floor . . _____
   e. Personnel access from southeast stairwell – 1st floor . . _____
   f. South air lock – inside . . . . . _____
   g. Personnel access from change room to containment area . . _____
   h. Personnel access to operating area from north side of building . . . . . _____
   i. Access from 3rd level – Room 313 . . . . . _____

7. Cell inlet bypass dampers open . . . . . _____

8. In-cell bypass dampers open . . . . . _____

9. Supply fan No. 2 stopped . . . . . _____

10. Supply fan No. 2 inlet damper closed . . . . . _____

11. Supply fan No. 1 operating . . . . . _____

12. Supply fan No. 3 operating . . . . . _____

13. Exhaust fans off:

    a. AJ-106 . . . . . _____
    b. AJ-102 . . . . . _____
    c. AJ-103 . . . . . _____

14. Exhaust fans damper closed:

    a. AJ-102 . . . . . _____
    b. AC-117 . . . . . _____
    c. AC-118 . . . . . _____

15. Cell w.g. negative pressure: . . . . . _____

    a. Cell A . . . . . _____
    b. Cell B . . . . . _____
    c. Cell C . . . . . _____
    d. Cell D . . . . . _____

Building Air Flow Measurement Design Criteria

Test 1

1. Test Conditions

   Building in normal operating condition.

2. Measurements

   a. Air flow readings at Tap 1 (outside Building 3047)

Reading		Differential Pressure (w.g.)
Top of duct	1	
	2	
	3	
	4	
	5	
Bottom of duct	6	

   b. Air flow readings at Tap 2 (chemical engineering area, Building 3047)

Reading		Differential Pressure (w.g.)
Top of duct	1	
	2	

	3
	4
	5
Bottom of duct	6

Test 2

1. Test Conditions

Building in same condition as Test 1 (normal operation) except decontamination room manual damper is closed.

2. Measurements

Air flow readings at Tap 2 (chemical engineering area, Building 3047)

Reading		Differential Pressure (w.g.)
Top of duct	1	
	2	
	3	
	4	
	5	
Bottom of duct	6	

Test 3

1. Test Conditions

Building in same condition as Test 2 except as follows:

a. Valve off all cell differential pressure manometers.
b. Disconnect one cell differential pressure manometer and connect the taps to a 12-in.-w.g. manometer or Magnehelic gage.
c. Tape plastic over the cell air inlet filters.
d. Tape plastic over the cell emergency air inlet duct openings.
e. Leave decontamination room damper closed.

2. Measurements

a. Cell differential pressure manometer (w.g.).
b. Air flow readings at Tap 1 (outside Building 3047)

Reading		Differential Pressure (w.g.)
Top of duct	1	
	2	
	3	
	4	
	5	
Bottom of duct	6	

c. Air flow readings at Tap 2 (chemical engineering area)

Reading		Differential Pressure (w.g.)
Top of duct	1	
	2	
	3	
	4	
	5	
Bottom of duct	6	

Test 4

1. Test Conditions

Leave building in same condition as during Test 3 and, in addition, close the manual dampers on all the contained area hoods (seven hoods). Mark the position of the damper arm on each hood before closing it so that when they are reopened later they can be returned to the same position.

2. Measurements

a. Cell differential pressure manometer (w.g.)
b. Air flow readings Tap 1 (outside Building 3047)

Reading		Differential Pressure (w.g.)
Top of duct	1	
	2	
	3	
	4	
	5	
Bottom of duct	6	

c. Air flow readings Tap 2 (chemical engineering area)

Reading		Differential Pressure (w.g.)
Top of duct	1	
	2	
	3	
	4	
	5	
Bottom of duct	6	

Test 5

1. Test Conditions

Leave building in same condition as during Test 4. In addition, turn off all building supply and exhaust air fans in both the contained and noncontained portions of the building.

2. Measurements

a. Cell differential pressure manometer (w.g.)

b. Air flow readings Tap 1 (outside Building 3047)

Reading		Differential Pressure (w.g.)
Top of duct	1	
	2	
	3	
	4	
	5	
Bottom of duct	6	

c. Air flow readings Tap 2 (chemical engineering area)

Reading		Differential Pressure (w.g.)
Top of duct	1	
	2	
	3	
	4	
	5	
Bottom of duct	6	

Test 6

1. Test Conditions

Restore building to normal operating conditions as follows:

a. Remove plastic coverings over cell air inlets.
b. Reconnect cell differential pressure gages.
c. Open hood dampers to original position.
d. Open decontamination room damper.
e. Turn on all air supply and exhaust fans.

2. Measurements

a. Air flow readings Tap 1 (outside Building 3047)

Reading		Differential Pressure (w.g.)
Top of duct	1	
	2	
	3	
	4	
	5	
Bottom of duct	6	

b. Air flow readings Tap 2 (chemical engineering area)

Reading		Differential Pressure (w.g.)
Top of duct	1	
	2	
	3	
	4	
	5	
Bottom of duct	6	

Test 7

1. Test Conditions

Leave the building in the same condition as Test 6 (normal operation) except place the building in containment.

2. Measurements

Time to Reach 0.3 in. w.g.	Time (sec)
a. In operating area	
b. In access area	
c. In cell top area	

Lowest Pressure Reached	Time (sec)	Pressure (in. w.g.)
d. In operating area		
e. In access area		
f. In cell top area		

g. Air flow readings Tap 1 (outside Building 3047)

Reading		Differential Pressure (w.g.)
Top of duct	1	
	2	
	3	
	4	
	5	
Bottom of duct	6	

h. Air flow readings Tap 2 (chemical engineering area)

Reading		Differential Pressure (w.g.)
Top of duct	1	
	2	
	3	
	4	
	5	
Bottom of duct	6	

Test 8

1. Test Conditions

Leave the building in the same condition as during Test 7 (in containment) and shut off the air supply fans to the entire building (contained and noncontained areas).

2. Measurements

in. w.g.

a. Negative pressure in operating area
b. Negative pressure in access area
c. Negative pressure in cell top area
d. Air flow readings Tap 1 (outside Building 3047)

Reading		Differential Pressure (w.g.)
Top of duct	1	
	2	
	3	
	4	
	5	
Bottom of duct	6	

e. Air flow readings Tap 2 (chemical engineering area)

Reading		Differential Pressure (w.g.)
Top of duct	1	
	2	
	3	
	4	
	5	
Bottom of duct	6	

APPENDIX C

OPERATING PROCEDURES AND REGULATIONS

Cell Entry Through Rear Access Door

1. Store all radioactive material in appropriate shielded casks. Place waste and debris in metal cans and remove via conveyor. Place cans in shielded dumpster or waste transfer cask for removal to the Burial Ground.

2. Hose down entire cell with water. Allow 15 min for cell to drain.

3. Check inside of cell with a Cutie Pie Survey Meter that has been wrapped in plastic and transferred to the cell via the conveyor. Remove the survey meter when the survey is complete.

4. Position conveyor dolly at either cubicle A or B. Choose the cubicle that is the greatest distance from the cell to be opened.

5. Set up rope supports around cell door with necessary radiation and/ or contamination signs attached to the rope.

6. Spread and tape blotter paper over entire roped-off area.

7. Provide separate plastic-lined receptacles for used plastic suits, coveralls and caps, gloves and bootees, and waste.

8. Prepare decontamination procedure and/or radiation work permit. The procedure should include reagents (concentration and volume) to be used, method of application, removal of equipment, disposition of equipment, potential hazards, etc.

9. Contact manipulator cell supervisor for cell key.

10. Set Emergency Damper Control switch to indicate setting for cell to be entered.

11. Due to the effort required to open the cell doors, two men shall perform the operation. One man is to open the door and the other is to handle the Cutie Pie Survey Meter.

12. Determine radiation levels in the cell (survey meter and smears) and consult cell supervisor for necessary protective clothing to be used.

13. Cell entry for the purpose of decontamination, equipment installation, equipment removal or equipment repairs involving the use or possible contact with radioactive solutions or solids shall require the following protective clothing:

    1 pair contamination coveralls
    1 pair plastic bootees (taped to coveralls)
    1 pair rubber gloves (taped to coveralls)
    Safety glasses
    Safety shoes
    Cotton cap

Film badge, pencil meters, chirper, dosimeter, and film ring
Air-line plastic suit complete with rubber gloves and plastic bootees

14. The following protective clothing shall be considered the minimum requirement for cell entry:

    Contamination coveralls
    Cotton or rubber gloves (taped to coveralls)
    Shoe covers
    Plastic bootees (taped to coveralls)
    Safety shoes
    Cotton cap
    Film badge, pencil meters, chirper, dosimeter, and film ring
    Assault mask

15. When personnel are working inside a cell, at least one man must be available outside the cell to assist with timekeeping, dressing, undressing, etc. and have the minimum requirement protective clothing available for emergency cell entry.

16. In-cell Procedure

    a. Check all suspicious material with a portable radiation detector.

    b. Do not remove anything by hand before checking with a survey meter. Use tongs, pliers, extended brushes or any other device which will keep the hands and body in radiation fields <5 R/hr.

    c. Work at a normal speed. Do not become excited as this requires a greater air supply and generally means a departure from safe work habits.

Cell Entry Through Top Plugs

1. Store all radioactive material in appropriate shielded casks. Place waste and debris in metal cans and remove via conveyor. Place cans in shielded dumpster or waste transfer cask for removal to Burial Ground.

2. Hose down entire cell with water if possible. Allow 15 min for cell to drain.

3. Position conveyor dolly at either cubicle A or B. Choose the cubicle that is the greatest distance from the cell to be opened.

4. Set up rope supports around the cell to be entered with necessary radiation and contamination signs attached to the ropes. NOTE: When opening cells B or C, notify personnel in Laboratory B of changing conditions near the Laboratory access door.

5. Place and tape down blotter paper inside the roped-off area except over the cell blocks to be removed.

6. Set up rope supports around area where cell blocks are to be stored. Attach appropriate radiation or contamination signs to the ropes. Place and tape down blotter paper inside the roped-off area.

7. Remove the 6-in.-diam plug from the cell blocks. Survey and wrap it in plastic. Place it on paper in roped-off area.

8. Obtain survey of cell interior through plug opening with suitable survey instrument.

9. Contact manipulator cell supervisor concerning cell block removal.

10. Start AC-117 fan before removing cell blocks.

11. Due to the effort required to operate the hoist and guide the blocks, two men shall perform the operation — one man to remove the blocks and the other to handle the survey meter.

12. Survey underside of each block and take four spot smears to determine transferable contamination. Consult manipulator cell supervisor for specific handling instructions. Decontaminate to <5000 dis/min if necessary.

13. Wrap each block in double plastic sheet and place within roped-off area.

14. Determine radiation levels in the cell (survey meter and smears) and consult cell supervisor for necessary protective clothing to be used.

15. Prepare decontamination procedure and/or radiation work permit. The procedure should include reagents (concentration and volume) to be used, method of application, removal of equipment, disposition of equipment, potential hazards, etc.

16. Cell entry for the purpose of decontamination of equipment, equipment removal, or equipment repairs involving the use or possible contact with radioactive solutions shall require the following protective clothing:

    1 pair contamination coveralls
    1 pair plastic bootees (taped to coveralls)
    1 pair rubber gloves (taped to coveralls)
    Safety glasses
    Safety shoes
    Cotton cap
    Film badge, pencil meters, chirper, and dosimeter
    Air-line plastic suit complete with rubber gloves and plastic bootees

17. The following protective clothing shall be considered the minimum requirement for cell entry:

    Contamination coveralls
    Cotton or rubber gloves (taped to coveralls)
    Shoe covers
    Plastic bootees (taped to coveralls)
    Safety shoes
    Cotton cap
    Film badge, pencil meters, chirper, and dosimeter
    Assault mask

18. When personnel are working inside a cell, at least one man must be available outside the cell to assist with timekeeping, dressing, undressing, etc. and have the minimum requirement protective clothing available for emergency cell entry.

Handling and Storage of Rare and Valuable Materials

1. Each unit (source, capsule, bottle, etc.) shall be stored in a container that is identified by a band of yellow tape and a number. The number shall appear in at least three places (~120° apart) along with the words PRODUCT STORAGE CAN.

2. A card shall be filled in with the following information:

    a. Date
    b. Radioactive material, form and amount (curies, grams, etc.)
    c. Radiation survey measurement (if available)
    d. Product storage can number
    e. Signature

3. The card shall be displayed at the operating face of the cell where the material is stored. If the material is moved to another cell, the card shall be displayed at the new location with the transfer noted.

4. Entries shall be recorded in the Cell Log Book. (A separate book is available at each cell for all operations affecting the transfer, storage, processing, handling or disposal of product materials.) Entries shall include the date and time of the operation and the signature of the person performing the operation.

5. All product storage cans must be inventoried each day and recorded in the log book. Also, each can must be accounted for before waste transfers to the Burial Ground are made. When it becomes necessary to retire a product storage can, a description of the disposition must be recorded in the log book.

Inter-Cell Conveyor Operation

Description

The conveyor consists of a cable-operated, motor-powered, 4-wheeled dolly that travels from cubicles A and B at each end of the cell block through cells A, B, C, and D. Design limitations for the dolly include a maximum weight of 50 lb and a maximum size of 12 x 12 x 12 in.

The conveyor may be operated from each of six stations — cubicles A and B and cells A, B, C, and D. Limit switches stop the dolly at the desired station. Indicator lights show dolly location. Safety switches automatically lock out the drive mechanism when the rear access door is opened or the top shielding blocks are removed. (Should an emergency arise making it necessary to move the dolly, the manipulator cell supervisor should be contacted.)

Operation

1. Observe location of dolly and check with other operation personnel to be sure that dolly is empty.

2. To move the dolly from one position to another proceed to the desired destination and press the center button.

3. When indicator light comes on at the destination, remove access cover and check position of dolly. It may be moved to the right or left by pressing appropriate jog button.

Radioactive Solid Waste Handling and Disposal

All solid radioactive waste except transuranium solid waste will be packaged and handled according to number 5.1 (Disposal of Solid Radioactive Wastes) of the Health Physics Procedures and Practices for Radiation Protection Manual. Low-level waste may be placed in plastic-lined hot cans for transfer to a yellow dumpster or by special request be sent directly to the Burial Ground (see Hot Can Handling Procedure).

The manipulator cell supervisor shall be consulted concerning the decontamination, packaging, cask procurement, cask loading, and cask removal operations.

Form UCN-2822, Request for Transfer of Contaminated Material to Burial Ground, shall accompany all shielded cask or special transfers to the Burial Ground from Building 3047. A Radiation Work Permit shall be executed as required (see Procedures and Practices for Radiation Protection, Health Physics Manual, No. A-32.1, page 2).

Four types of shielded transfer casks are available for use in Building 3047 to transport high-level and intermediate-level beta and gamma waste to the Burial Ground. One type of shielded cask (two available) is a shielded dumpster with approximate inside dimensions as follows:

23 by 68 in.	at bottom
44 by 68 in.	at top
28 in. at back	height
32 in. at front	height
30 ft^3	approximate volume

The material of construction is steel and the shielding is 1-in.-thick lead. Arrangements for the cask may be made through the Burial Ground foreman, telephone 3-6356.

The second type of shielded cask (two available) is a shielded dumpster with approximate inside dimensions as follows:

20 by 38 in.	at bottom
37 by 38 in.	at top
24 in. at back	height
16 in. at front	height
10 ft^3	approximate volume

The material of construction is stainless steel and the shielding is 4 in. of lead. One of the casks is stored in Building 3029 and the other is stored at the Fission Products Development Laboratory.

The third cask accommodates a one-gallon can and is designed for top or bottom loading and for bottom discharge. The shielding is 4-in.-thick lead. Cans may be introduced and removed from conveyor cubicles A or B with the cask.

After the cask is loaded and the drawer is locked in the closed position, it shall be enclosed in two or more layers of heavy plastic sheet and placed in a metal tray for transfer to the Burial Ground. The cask must be secured to prevent lateral or vertical movement.

The fourth type of shielded cask is the Pierce cask. It is designed for top loading and is emptied by tilting to an inverted position and allowing the waste packages to slide out. The shielding is 8-in.-thick lead and the cavity size is 12 in. diam by 24 in. high. The weight of the cask is ~10,000 lb.

Materials and equipment to be removed from the hot cells must be emptied of all radioactive solution and decontaminated with detergents and/or complexing agents. The material shall be placed in metal cans with covers taped on where possible. Large or odd-shaped materials or equipment shall be enclosed in heavy plastic, wooden coffins or both. Radioactive solutions must not be placed in the transfer casks.

The equipment shall be packaged for removal from the cells before the transfer cask is placed in the building to avoid inactivating the casks for prolonged periods of time. Also, the casks are not to be used as temporary storage shields.

All transuranium solid waste will be packaged and handled according to the "Interim Procedure for Storage of Transuranium Solid Waste," number A-9 in the Health Physics Procedures and Practices for Radiation Protection Manual.

Hot Can Handling Procedure

1. Cans reading <200 mR/hr will be placed in the shielded dumpster at the east end of the Isotopes Area by Isotopes Development Department personnel. Place radiation tags or signs on cans in use reading >6 mR/hr.

2. Cans reading >200 mR/hr must be handled on a special pickup basis (call Burial Ground, 3-6356, to arrange for special pickup).

3. Use only "Approved for Use" tagged empties equipped with a plastic bag liner.

4. The Zoning Procedure is always in effect.

5. Personnel in Building 3047 are responsible for the following:

   a. Taping the bags closed.
   b. Monitoring and tagging all cans.
   c. Taping on covers on all cans for Burial Ground pickup.
   d. Placing cans in proper location for pickup.

Manipulator Change-Out Procedure

1. Remotely decontaminate manipulator.

2. Remotely de-tong manipulator to be removed.

3. Spread and tape down blotter paper in front of cell.

4. Drape plastic sheet down the front face of cell.

5. Rope off operating area.

6. Shut down AC-118 supply fan.

   NOTE: When extremely hazardous contamination is suspected, an announcement should be made over the PA system and the building should be put into containment condition.

7. Obtain Radiation Work Permit. Supervisor in charge and Health Physics representative shall sign Radiation Work Permit.

8. Minimum protective clothing requirements are:

   Coveralls
   Shoe covers
   Gloves
   Assault mask
   Cap

9. Millwright will proceed with normal manipulator removal procedure, which includes bagging in plastic as it is removed. Health Physics representative will be in attendance continually during manipulator removal.

10. After removal, radiation permitting, a smear should be taken on the slave end of the manipulator by carefully cutting the plastic covering and resealing after the smear is taken.

11. Decontamination procedure will be determined by the above smear.

12. After manipulator is replaced, all paper and plastic should be picked up and the entire operating area should be smeared and cleaned if necessary.

13. Start AC-118 supply fan.

14. If building was put into containment for removal of manipulators, return the building to normal conditions.

Vacuum Surge Tank Draining

1. The annunciator in Room 109 and vacuum pit panelboard will sound an alarm when F-104 has a liquid level of ~7 in. Acknowledge both alarms.

2. Shut down vacuum system by stopping vacuum pump (J-101).

3. Bleed off vacuum in F-104 to atmosphere by opening bleed valve at vacuum pit panelboard.

4. Open HCV-104.

5. Open steam to J-108 (steam jet) (HS-108).

6. Allow jet to run until TI-108 indicates that F-104 is empty. Turn off steam.

7. Close HCV-104.

8. F-104 should be rinsed with H_2O each time it becomes necessary to empty tank under normal operations.

9. To rinse F-104, start vacuum system and add H_2O through bleed valve at panelboard until the level alarm sounds.

10. Repeat steps 2 through 7.

11. Start vacuum pump.

12. Reset all alarms.

Vacuum Seal Water Tank Draining

1. Shut down vacuum system by stopping vacuum pump (J-101).

2. Open HCV-105.

3. Turn on steam to J-108.

4. Continue jetting until TI-108 indicates that F-105 is empty.

   NOTE: Low-level alarm will sound.

5. Close HS-108.

6. Close HCV-105.

7. Add H_2O to F-105 through valve at panelboard until level alarm on F-105 is in normal condition.

8. Start J-101.

9. Reset all alarms.

Vacuum Pit Entry

1. A Health Physics surveyor should be in attendance at all times when entry into the vacuum pit becomes necessary.

2. If at all possible, the vacuum system should be shut down, and F-105 and F-104 should be rinsed as per Vacuum Surge Tank Draining Procedure.

3. Set up contamination zone around access port.

4. Pull manhole cover from vacuum pit access port.

5. Have Health Physics survey carefully from top of port.

6. Health Physics surveyor will survey and spot-smear vacuum pit; this survey and smear procedure will determine protective clothing to be worn.

Hot Off-Gas and Cell Ventilation Sump Jet Operation

Description

Two sumps are located inside cell D to drain the hot off-gas and cell ventilation ducts. Each sump has a separate steam jet syphon which empties into a 10-gal stainless steel discharge tank. The process valves in the system are remotely operated bellows-sealed valves. The controls are located on the operating face of cell D.

High-level pressure switches for each sump are located on the face of cell D, and the alarm is connected to the Edwards Annunciator Panel in the cell operating area.

When the alarm is activated, acknowledge the audible alarm and proceed with the following operations.

1. Cell Ventilation Sump

   a. Close valves 1 and 5
   b. Open valve 2
   c. Open valve 4
   d. Open manual steam valve labeled STEAM TO CELL VENT. SUMP JET
   e. Allow steam to flow for ~1 min after alarm light goes off
   f. Close manual steam valve
   g. Close valve 4
   h. Close valve 2
   i. Open valves 1 and 5; observe flow from tank to drain

2. Hot Off-Gas Sump

   a. Close valves 1 and 5
   b. Open valve 2
   c. Open valve 3
   d. Open manual steam valve labeled STEAM TO H.O.G. SUMP JET
   e. Allow steam to flow for ~1 min after alarm light goes off
   f. Close manual steam valve
   g. Close valve 3
   h. Close valve 2
   i. Open valves 1 and 5; observe flow from tank to drain

Vacuum Pit Panelboard

1. Acknowledge alarm at Edwards Annunciator and then at vacuum pit panelboard.

2. The following items could cause alarm.

   a. Surge Tank High Level

      Correction – contact one of the persons mentioned in 3. for instructions.

b. Vacuum Pit Sump High Level

Correction – open HS-101 vacuum sump drain valve. Open HS-108 steam to jet valve. Allow steam jet to operate until temperature indicator on TI-108 shows a rise in temperature. Close HS-101 and HS-108.

c. TA-101, TA-108, TA-101A, TA-103, and TA-105

Correction – check Wheelco Controllers and note which is causing alarm.

TA-101 Vacuum Pump South Bearing Case Temperature – contact one of the persons mentioned in 3. for instructions.

TA-108 Jet Discharge Temperature – check HS-108 (steam to jet) valve to make sure that it is closed.

TA-101A – not operating

TA-103 C-103 Heater Exchanger H_2O Discharge Temperature – increase flow through cooling H_2O rotometer by opening manual valve located just behind rotometer.

TA-105 Seal H_2O Temperature – increase flow through cooling H_2O rotometer by opening manual valve located just behind rotometer.

d. Seal H_2O Tank (F-105) Low Level

Correction – add H_2O to F-105 by manual valve located behind panelboard until alarm returns to normal condition.

e. Seal H_2O Tank (F-105) High Level

Correction – open HS-105 valve, open HS-108, and allow jet to operate until alarm returns to normal.

3. For further information contact:

W. G. Tatum	Lenoir City	986-8649
E. E. Pierce	Kingston	376-6316
T. A. Butler	Oak Ridge	482-1363

Containment

1. In the event the building should be in containment, designated lights at each entrance to the containment area will be flashing and an intermittent sounding horn can be heard in each stairwell and also in the operating area.

2. Call Health Physics.

3. Check radiation monitor panel in southeast stairwell to see if containment was caused by a radiation incident.

   NOTE: It takes two air monitors alarming simultaneously to cause building to go into containment.

4. If radiation has caused building to go into containment, have Health Physics "dress out" in appropriate protective clothing and enter containment area to survey the situation.

5. After survey has been completed, contact one of the persons listed in 10. for further instructions.

6. If radiation did not cause the building to go into containment, enter operating area and press Alarm Reset button on Air System Control Panel and on Edwards Annunciator. This will stop all horns. Flashing lights will continue to operate until Air System is reset and building is back in normal condition.

7. If power failure caused containment, follow Power Surge Correction Procedure.

8. Check pressure differential between cells and operating area. A differential of -0.25 in. w.g. will cause building to go into containment. Note which cell or cells caused containment and contact one of the persons listed in 10.

9. To reset containment and return building to normal condition after the cause has been corrected, do the following:

   a. Press "Reset" button on Air System Control Panel.
   b. Start AJ-102, AJ-103, and AJ-106 at Motor Control Center in Room 102.

10. For further information contact:

W. G. Tatum	Lenoir City	986-8649
E. E. Pierce	Kingston	376-6316
T. A. Butler	Oak Ridge	482-1363

Building 3047 Plant Evacuation Procedure

Immediately upon hearing the Plant Evacuation signal, the following operations will be performed:

1. Shut down all operations possible. Turn out lights in laboratories and offices.

2. The searchers will search their assigned areas, alerting and evacuating all personnel.

3. Evacuation route follows Isotope Circle to 5th Street to Central Avenue to East Portal.

4. After making a search of the building, the searchers will report to the building warden at the southeast stairwell, first floor.

Building 3047 Safety Regulations

Protective Clothing and Equipment

1. Protective Clothing

The normal minimum protective clothing required for work in the laboratories and cell areas of Building 3047 consists of the following: (a) safety glasses, (b) khaki clothing, lab coat, and (c) safety shoes. Such items as coveralls, gloves, caps, jackets, etc. are provided for wear as needed.

Clothing should fit properly. Loose clothing can get snagged on equipment, clothing legs that are too long can lead to falls, or clothing that is too tight can cause discomfort and loss of efficiency. Clothing marked "contamination" cannot be worn outside regulated zone areas except when traveling in a properly marked vehicle.

2. Gas Masks

Three types of gas masks are available for use in Building 3047: (a) standard assault mask, (b) full-vision mask, and (c) air-supplied respirator. Gas masks are used in areas where airborne contamination or vapor hazards exist or can be expected to occur. These areas are designated by supervision as they occur, and a gas mask must be worn. Certain areas are permanent gas mask areas. Gas masks are used once and then sent for cleaning. They should be placed in plastic bags and delivered to the Health Physics office after use, not left lying around. Eye glasses cannot be worn with either the assault mask or the full-vision mask.

A supply of gas masks is kept on hand for normal use. The gas masks in the Emergency Cabinet are for emergency use. If it is necessary to use masks from these cabinets because of short supply, supervision should note this and replace the masks as soon as possible. The masks in the Emergency Cabinet are not to be removed without permission of the building supervisor, except in emergencies.

3. Air-Line Suit

The air-line suit is used for protection from contamination and for some chemical work. It consists of three sections: (a) air-line

vest, (b) plastic top and helmet, and (c) plastic trousers. The vest is worn under the top and an air-line is connected to a quick connect fitting on the vest. A headband with air-line attached fits around the forehead and two air lines extend into the legs of the suit. Compressed air at 25 psi is supplied to the suit. A drawstring in the top part of the suit allows it to be tightened just below the waist and air is exhausted at this point. Normally, not more than 50 ft of air line is used between the air supply and the suit; permission to use more must be obtained from building supervision.

When working in an air-line suit, an operator must be observed constantly. The observer gives assistance while putting on or removing the suit and observes while the work is being done. He keeps the air line straight, provides tools and equipment, and must be ready to give emergency assistance if required.

Situations which require air-line suits include decontamination in cells, handling of large amounts of acid, and removal of contaminated equipment from cells.

Air-line suits are checked for damage when they are brought into the building. They should also be inspected by the observer before use.

No more than two air lines should be used at one station at the normal air pressure setting.

4. Face Shield

Plastic face shields are to be worn while pouring or mixing chemicals. These shields are not designed as protection from impact, but are to prevent harmful chemicals or particles from coming in contact with the face.

Face shields should be cleaned before and after use, and should be kept off the work tables. Face shields lying around are likely to pick up harmful chemicals.

5. Safety Glasses

It is a building regulation that safety glasses or their equivalent be worn at all times by personnel working in the building.

There is a certain resistance on the part of some personnel to the wearing of safety glasses. Like all other items in this group, safety glasses are intended for the protection of the individual. Everyone should be aware of the obvious need for eye protection; however if a person cannot accept logical explanations of this need, two statements cover the wearing of safety glasses:

a. Common sense suggests them, and
b. Regulations require them.

Failure to wear safety glasses is grounds for disciplinary action.

Any person who breaks, misplaces, contaminates or otherwise renders his safety glasses unusable should report this immediately to supervision. Laboratory goggles may be worn while safety glasses are being replaced.

6. Hard Hat

At certain times areas in the building may be designated as "hard hat" zones. These areas are posted with appropriate signs and wearing of hard hats is required at all times. Even temporary entry into a "hard hat" zone requires a hard hat. Hard hats are kept on hand as part of the building protective equipment.

7. Safety Shoes

Safety shoes are supplied to all personnel and should be worn while working in the building.

8. Safety Belt and Line

Safety belts and harnesses are used mostly for work at the top of a cell. When a worker is in a cell with a safety line, an observer is required. Also, the safety line must be secured at the top of the cell. For work on the top of a cell, the line must be secured with the minimum length of line which allows the necessary freedom of movement. If a safety belt is used with a plastic air-line suit, it should be worn under the suit so that the belt cannot restrict the air line.

A safety line should be of minimum length and in no case should it be long enough to allow a man to fall more than his own height. This rule-of-thumb is based more on the body's ability (or lack of it) to stand shock than on the strength of the safety belt or line.

"Sash cord" is not to be used for safety lines.

Summary: The use of personal safety equipment is the responsibility of each individual for his own protection. However, since the safety of all employees is of direct concern to supervision, the supervisor must make sure that the proper use of safety equipment is known and adhered to by all his personnel.

Handling and Storing of Chemicals and Equipment

1. All materials weighing over 50 lb will be handled by two or more men or by the crane. The weight limit is 50 lb per man.

2. Loading areas will be chained off when equipment or chemicals are being lifted with the crane.

3. Gas cylinders will be handled according to standard procedure and all empties will be tagged and placed in the EMPTY racks.

4. Carboys will be handled by carboy lifters and drum holders will be flushed and tagged after emptying.

5. Acid bottles will be carried in approved containers and all empties will be cleaned immediately after emptying.

6. All empty chemical containers shall be removed from the building and stored in proper places as soon as possible.

7. All solvents will be contained in approved vessels and stored inside approved solvent storage cabinets.

8. All areas shall be kept clean of materials at the safety showers, fire fighting equipment, aisles, and exits.

9. Flammable material will not be stored under or above any stairwell.

Mechanical and Electrical Equipment

1. No mechanical equipment, i.e., cranes, pumps, agitators, etc. will be operated until the operator personally clears the immediate area of personnel.

2. Main electrical switches will be locked out and tagged whenever work is necessary on electrical equipment.

3. Danger tags will not be removed from equipment by anyone except the person who originally placed them on the equipment.

4. When not in use, the crane hook will always be left at least 7 ft above the floor or within a roped-off area.

Fire Fighting and Emergency Equipment

1. Cell personnel shall acquaint themselves with the operation and location of all fire fighting and other emergency equipment.

2. All personnel shall acquaint themselves with the operation and location of all safety showers.

3. All personnel shall acquaint themselves with the operation and location of assault masks and air-line suits.

Safety and Housekeeping

Since good housekeeping is conducive to safety, the building supervisor is responsible for keeping the building in an orderly fashion at all times.

The building supervisor, or his designated representative, shall tour the building each working day looking for possible hazards, equipment needing repair, or improvements that could be made.

APPENDIX D

CALCULATION METHODS

Maximum Downwind Dose

Radioactive material that may become dispersed in the air of a cell in Building 3047 is carried through underground duct work to the Isotopes Area Filter Pit and then to the Building 3039 stack where the air is discharged to the atmosphere at a height of 200 ft. All of the dispersible inventory in a cell will not reach the filters because some particles will be too large to remain entrained in the air stream and many others will be removed by impingement against the walls of the cell and ducts. For the purpose of these calculations, it is assumed that 20% of the dispersible inventory in the cell reaches the filter pit and that the particle size distribution and filter efficiency are as follows:[1]

Particle Size Range (μm)	Percent of Total Weight	Filter Removal Efficiency (%)
≥0.3	98.8	99.95
0.1-0.3	1.1	95.0
<0.1	0.1	87.0

If it is assumed that the radioactive material which penetrates the filters passes out the stack in a short period of time, the maximum dose will occur at the point where the plume hits the ground and will depend on the dilution of the plume as it expands upon leaving the stack. The extent of the dilution will vary according to the height of the stack, wind velocity, and atmospheric conditions and is evaluated for a specific set of conditions as follows:[2]

$$k_{ma} = 2/(\pi e \mu h^2),$$

$$k_{ma} = 1.6 \times 10^{-5} \text{ sec/m}^3 .$$

where

k_{ma} = maximum average stack dilution factor, sec/m^3,

μ = wind velocity, m/sec,

h = effective stack height, m.

and for the Building 3039 stack (250 ft) at a wind velocity of 3 mph, $k_{ma} = 1.6 \times 10^{-5}$ sec/m^3.

A value of 3 mph has been chosen as the wind velocity because k, which describes the maximum average ground concentration, goes through a maximum at about this value due to the dependence of the effective stack height on wind velocity as follows:[2]

$$h = H + d(V_s/\mu)^{1.4} (1 + \Delta T/T_s) ,$$

where

H = actual stack height, m ,

d = stack diameter, m ,

V_s = velocity in stack, m/sec ,

T_s = stack gas temperature, °C ,

ΔT = difference between stack and ambient temperatures.

The maximum dose received downwind for a given set of atmospheric conditions (k) can then be written:

$$D = \frac{(C)(k)(0.1)(1.44)}{(1.44 \times 10^5)(MPCa_{40})} \text{ rem} ,$$

where

C = activity released from the stack, Ci ,

k = stack dilution factor, sec/m^3,

$MPCa_{40}$ = maximum permissible concentration of radioactive material in air that will give a 100-mrem dose in 40 hr of exposure, Ci/m^3,

1.44×10^5 = seconds in 40 hr,

1.44 = factor to compensate for increased breathing rate.

The curies (C) of activity released from the stack can be obtained from the particle size distribution and filter efficiency as follows:

$$C = (Q_D)(0.2)[(0.988)(5 \times 10^{-4}) + (0.011)(0.05) + (1 \times 10^{-3})(0.13)] ,$$

where

Q_D = dispersible inventory in cell, Ci .

Therefore the maximum downwind dose for a particular isotope may be written as:

$$D = \frac{(Q_D)(1.6 \times 10^{-5})(10^{-6})(2.35 \times 10^{-4})}{MPCa_{40}} \text{ rem} .$$

Downwind Dose Distribution

If it is assumed that the particles discharged from the stack are small enough to behave essentially like a gas, the dilution of the plume at any distance from the stack will depend on the wind velocity, atmospheric diffusion coefficient, and atmospheric stability conditions. The stack dilution factor at any distance, X, from the stack is:[3]

$$k = \frac{2}{\pi C_x^2 X^{2-n} \mu} e^{-(h^2/C_x^2 X^{2-n})} ,$$

where

k = stack dilution factor, sec/m^3 ,

μ = wind velocity, m/sec ,

h = effective stack height, m ,

X = horizontal downwind distance from stack, m ,

C_x = atmospheric diffusion coefficient ,

n = atmospheric stability parameter .

For the neutral atmospheric conditions assumed in this report, the values of C and n are 0.1 and 0.25, respectively.

The time required for the plume to reach the ground (the maximum average ground level dilution) is:[4]

$$t = \frac{1}{\mu}(h^2/C_x^2)^{1/(2-n)} .$$

Therefore the horizontal distance from the stack at which the maximum ground level dose is incurred is:

$$X_{ma} = t\mu = (h^2/C_x^2)^{1/(2-n)} .$$

Maximum Contaminated Area

The maximum area enclosed by a specified contamination isopleth resulting from the plume of a stack release can be approximated by:[5]

$$A_{max} = 0.18/(w/c) ,$$

where

A_{max} = maximum contaminated area, m^2 ,

w = contamination level, Ci/m^2 ,

c = curies released from stack .

If an area is considered contaminated, it exceeds 30 dis/min·dm^2 alpha or 1000 dis/min·dm^2 beta-gamma, then

$$A_\alpha = (1.53 \times 10^3)c/30 \text{ mile}^2 ,$$

and

$$A_{\beta\gamma} = 1.53c \text{ mile}^2 .$$

Volume of Release to Secondary Containment

The volume of air which will flow from the primary containment to the secondary containment if the primary containment volume becomes pressurized depends on the duration of the pressurization, the pressure differential between primary and secondary containment volumes during pressurization, and the leak rate of the primary containment barrier. The maximum credible accident assumed for the Building 3047 cell block is an explosion that generates 100 ft^3 of gas in 0.5 sec.

Flow through an orifice is directly proportional to the square root of the pressure differential and inversely proportional to the orifice resistance:[6]

$$Q = (\Delta P)^{\frac{1}{2}}/R_o ,$$

where

Q = flow rate ,

ΔP = pressure differential ,

R_o = orifice resistance .

The leak-rate data for the Building 3047 cell block give an equivalent orifice resistance as follows:

$$R_o = (2^{\frac{1}{2}} \times 60)/150 = 0.48 \text{ (in. w.g.)}^{\frac{1}{2}}/\text{cfs} .$$

As soon as the cell pressure reaches 0.25 in. w.g. negative, the pressure switches will activate the emergency exhaust to increase the flow rate to 1200 ft^3/min so that during the 0.5 sec the gases are being generated by the explosion, 10 ft^3 will be exhausted leaving 90 ft^3 to pressurize the cell. The volume of the largest cell is 895 ft^3 and, neglecting the additional surge volume of the cell ventilation ducts available for gas expansion, the pressure in the cell will rise to 1.48 psig at the end of 0.5 sec. At an exhaust rate of 1200 ft^3/min the pressure will drop back to 0 psig in 4.5 sec, and the amount of gas leaking out of the cell during this interval will be:

$$W = (\Delta P_{av})^{\frac{1}{2}} mt/R_o ,$$

where

ΔP_{av} = average pressure differential = 20.5 in. w.g. ,

R_o = equivalent orifice resistance = 0.48 $\text{(in. w.g.)}^{\frac{1}{2}}$/cfs ,

m = cell to cell block volume ratio = 2/7 ,

t = time of pressurization = 5 sec ,

W = volume of gas escaping to secondary containment = 2.7 ft^3 .

REFERENCES

1. J. Nichols, Chemical Technology Division, personal communication.

2. E. D. Arnold et al., Radiochemical Facility Hazard Evaluation, USAEC Rpt. ORNL-CF-61-7-39, Oak Ridge National Laboratory (July 1961).

3. Meteorology and Atomic Energy, U. S. Department of Commerce, AECU-3066 (July 1955).

4. E. D. Arnold and J. P. Nichols, Hazards Analysis of Fuel Handling Facilities, USAEC Rpt. ORNL-TM-346, Oak Ridge National Laboratory (August 1962).

5. C. E. Guthrie and J. P. Nichols, Theoretical Possibilities and Consequences of Major Accidents in ^{233}U and ^{239}Pu Fuel Fabrication and Radioisotope Processing Plants, USAEC Rpt. ORNL-CF-63-10-34, Oak Ridge National Laboratory (October 1963).

6. J. J. Perona et al., Calculated Transient Pressures Due to Impulse and Ramp Perturbations to Ventilating Systems in Buildings 3019, 3026, 3508, and 4507, USAEC Rpt. ORNL-3086, Oak Ridge National Laboratory (August 1961).

INTERNAL DISTRIBUTION

1-8. T. A. Arehart
9. P. S. Baker
10. E. E. Beauchamp
11. T. A. Butler
12. F. N. Case
13. J. H. Gillette
14. E. Lamb
15. L. O. Love
16. R. E. McHenry
17-22. E. E. Pierce
23. R. A. Robinson
24. A. F. Rupp
25-26. Central Research Library
27. Document Reference Section
28-30. Laboratory Records
31. Laboratory Records - RC
32. ORNL Patent Office
33-34. DTIE
35. Laboratory and University Division, OR