CENTRAL RESEARCH LIBRARY
DOCUMENT COLLECTION

OAK RIDGE NATIONAL LABORATORY
operated by
UNION CARBIDE CORPORATION
for the
U. S. ATOMIC ENERGY COMMISSION

OAK RIDGE NATIONAL LABORATORY LIBRARY
3 4456 0023109 6

ORNL-TM-3289

cy. 1

HIGH-TEMPERATURE BURST STRENGTH AND DUCTILITY OF ZIRCALOY TUBING

R. D. Waddell, Jr., and P. L. Rittenhouse

OAK RIDGE NATIONAL LABORATORY
CENTRAL RESEARCH LIBRARY
DOCUMENT COLLECTION
LIBRARY LOAN COPY
DO NOT TRANSFER TO ANOTHER PERSON
If you wish someone else to see this document, send in name with document and the library will arrange a loan.
UCN-7969
(3 3-67)

NOTICE This document contains information of a preliminary nature and was prepared primarily for internal use at the Oak Ridge National Laboratory. It is subject to revision or correction and therefore does not represent a final report.

This report was prepared as an account of work sponsored by the United States Government. Neither the United States nor the United States Atomic Energy Commission, nor any of their employees, nor any of their contractors, subcontractors, or their employees, makes any warranty, express or implied, or assumes any legal liability or responsibility for the accuracy, completeness or usefulness of any information, apparatus, product or process disclosed, or represents that its use would not infringe privately owned rights.

ORNL-TM-3289

Contract No. W-7405-eng-26

METALS AND CERAMICS DIVISION

HIGH-TEMPERATURE BURST STRENGTH AND DUCTILITY OF ZIRCALOY TUBING

R. D. Waddell, Jr. and P. L. Rittenhouse

MARCH 1971

OAK RIDGE NATIONAL LABORATORY
Oak Ridge, Tennessee
operated by
UNION CARBIDE CORPORATION
for the
U.S. ATOMIC ENERGY COMMISSION

OAK RIDGE NATIONAL LABORATORY LIBRARY

3 4456 0023109 6

CONTENTS

	Page
Abstract	1
Introduction	1
Experimental Details	4
Results	7
Conclusions	13
Acknowledgments	14
Appendix	17

HIGH-TEMPERATURE BURST STRENGTH AND DUCTILITY OF ZIRCALOY TUBING

R. D. Waddell, Jr. and P. L. Rittenhouse

ABSTRACT

Isothermal tube burst tests were performed to determine the strength, ductility and failure mode of Zircaloy-4 fuel rod cladding in the temperature range 1100 to 2100°F. Tests were conducted on Zircaloy tubing into which controlled wall defects were introduced as well as on stress-relieved material containing no wall defects. The defects were designed to simulate those that might be formed during loading of a reactor core or as a result of corrosion. At all test temperatures, the undefected material showed circumferential strains in excess of 50%. The presence of wall defects did not affect rupture stress but did, depending on the type of defect, influence rupture location as well as magnitude of the expansion.

INTRODUCTION

Because the size of light-water reactors (LWR) being scheduled for use in commercial power generation is quite large [approaching 1200 Mw(e)] and because of the desire to site them in urban areas, steps must be taken to safeguard the populace in the event of an accident. To this end, power reactors are equipped with containment systems, emergency core-cooling systems, and other engineered safety features. The generally accepted design basis accident in LWR's is the loss-of-coolant accident (LOCA). This accident is initiated by a rupture in the primary system and results in a rapid loss of coolant and pressure and subsequent rise in temperature of the fuel cladding. The rupture may range from a small crack to a double-ended failure of the largest pipe.

The cladding used in LWR's is Zircaloy-4, which melts at about 3400°F and has an allotropic transformation on heating from the hexagonal close packed (hcp) structure (α) to the body-centered cubic (bcc)

structure (β) that begins at 1500°F and is complete at 1775°F. The temperature range of interest in terms of stress-strain properties of the cladding is shown in Fig. 1. It is bounded on the low side by the normal operating temperature of the fuel cladding (~ 600°F) and on the high side by that temperature at which most of the fuel rods will have ruptured (2400°F). However, a range of temperatures more critical

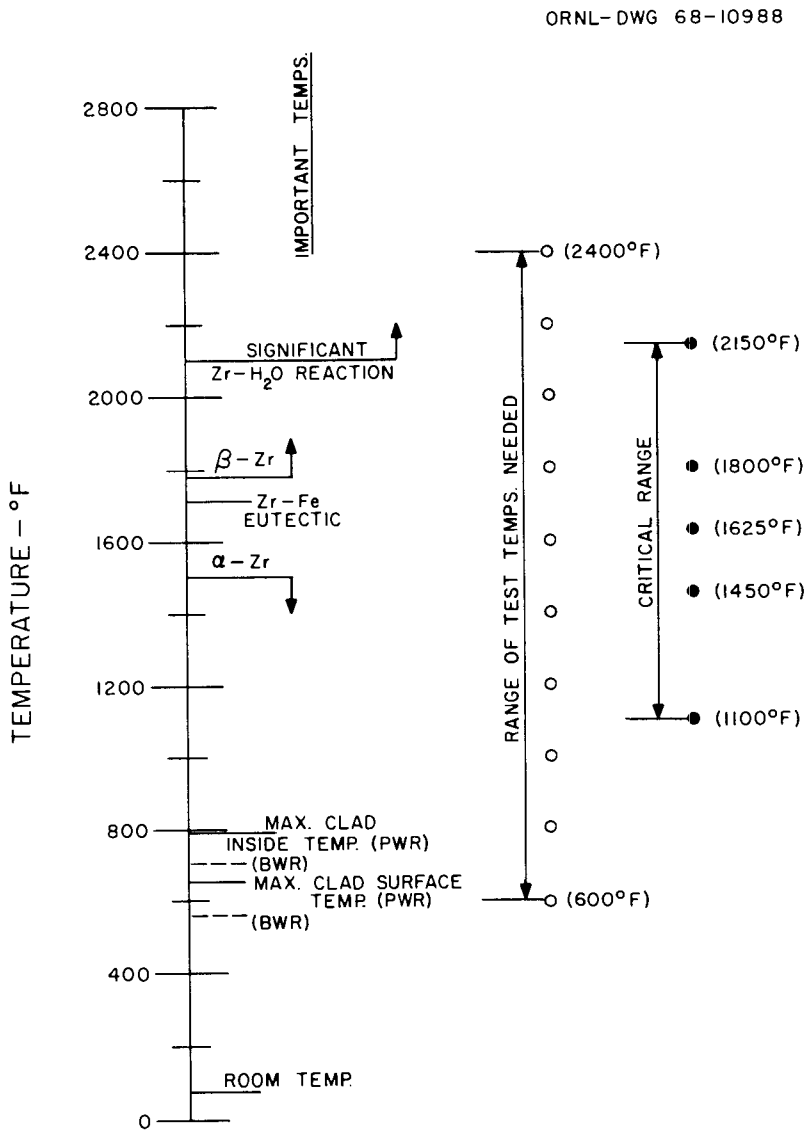

Fig. 1. Temperature Range of Interest for the Stress-Strain Properties of Zircaloy Cladding.

in terms of the LOCA is 1100 to 2100°F. The lower limit, 1100°F, is about the point at which the first of the fuel rods is expected to fail, and the upper limit, 2100°F, approximates the temperature at which emergency core cooling should begin. Specifically, five temperatures were selected: 1100, 1450, 1625, 1800, and 2100°F – with 1100°F being in the α phase, 1450°F just below the $\alpha \rightarrow \alpha + \beta$ phase transformation, 1625°F in the mid $\alpha + \beta$ phase, 1800°F just above the $\alpha + \beta \rightarrow \beta$ phase transformation, and 2100°F in the β phase.

During the thermal excursion associated with a LOCA the strength of the Zircaloy cladding rapidly decreases until it is below that required to withstand the hoop stresses resulting from the internal pressures of the fission gases. The combination of low strength and fission-gas pressure will result in yielding, plastic deformation (expansion) and, finally, rupture of the cladding. Individual fuel rod expansions in excess of 30% will cause contact between adjacent rods and will reduce the area of the coolant channel by 60%. If individual tube expansions reach 60% the entire channel could be blocked. These figures assume that the expansion of the cladding is uniform about the cladding axis and that the point of maximum expansion for all rods occurs on the same horizontal plane – a very unlikely occurrence. Nevertheless, cladding expansion is certainly a failure mode with which we must concern ourselves because reduced coolant flow, perhaps total blockage in some areas, could result in cladding embrittlement by reaction of the cladding with residual steam and subsequent rod shattering. Also, fuel rod melting is possible if the blockage is severe.

Because information on the mechanical properties of Zircaloy above approximately 1000°F was limited and because of disagreements in those data that did exist, a series of isothermal burst tests was conducted to determine the strength, ductility and mode of failure over the temperature range of interest. This was the first in a series of studies which include isothermal and both single- and multirod transient burst tests.

EXPERIMENTAL DETAILS

Materials used in testing included surplus Dresden cladding obtained from General Electric Company (NSP), and both boiling water reactor (BWR) and pressurized water reactor (PWR) size cladding purchased in the stress-relieved condition from Amax Specialty Metals Company. These latter materials met both ASTM and current reactor specifications. The test samples used were 24 in. long and were housed in a stainless steel vessel which acted as a pressure container as well as allowing the sample to be enveloped in a blanket of high-purity argon. This assembly was lowered into a 16-in.-long, resistance-heated furnace. The center 4 in. of the sample was monitored by sheathed Chromel-P—Alumel thermocouples. During the calibration of the furnace the center 8 in. of the sample was monitored and an acceptable heat zone was established (a typical temperature profile can be seen in Fig. 2). The fact that the location of failure was random is indicative of a level heat zone. A schematic drawing of the test facility is shown in Fig. 3.

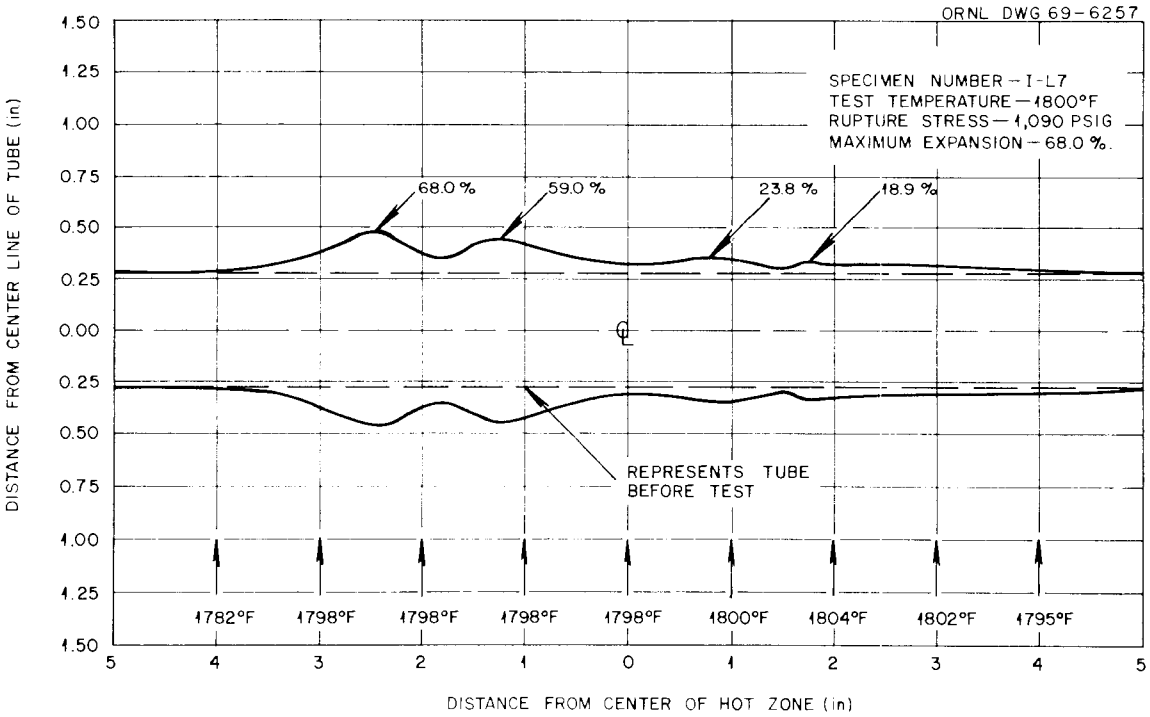

Fig. 2. Cross-Sectional View of BWR Type Zircaloy Cladding Showing Local Points of Maximum Expansion.

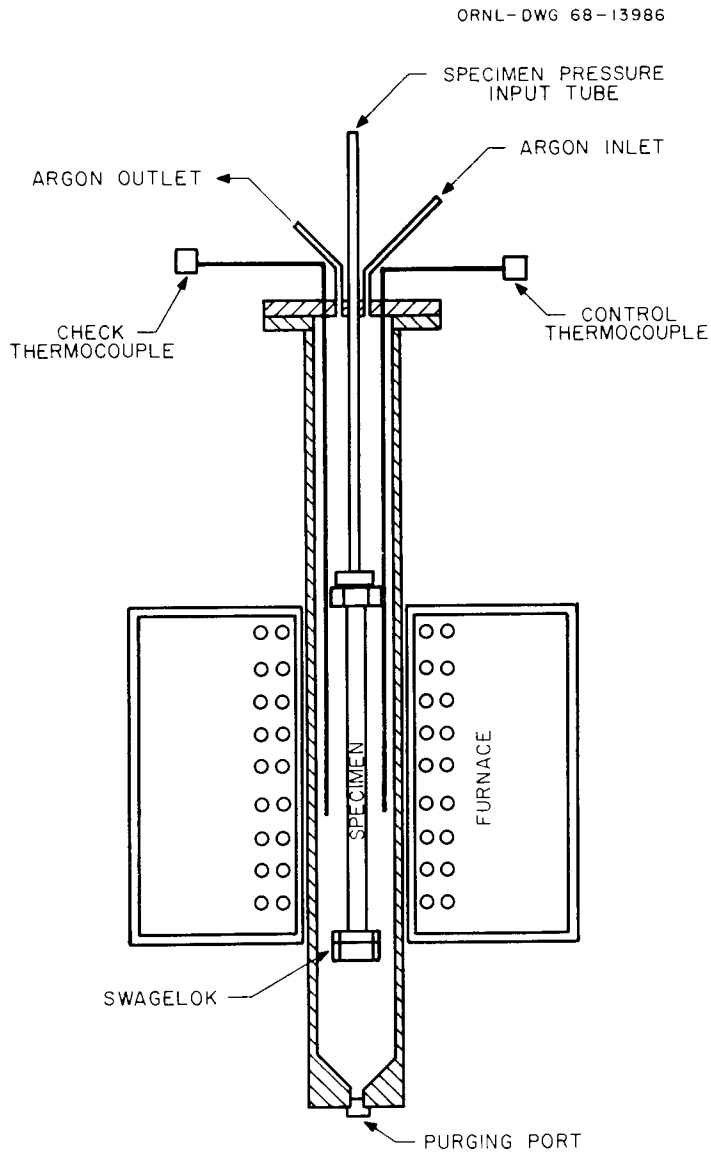

Fig. 3. Schematic Drawing of Isothermal Test Facility.

Pressurization of the sample was accomplished with high-purity argon using a modified Hoke, 521 series, ballast loaded pressure regulator to maintain a constant, preselected, pressurizing rate (usually about 50 to 55 psi/min). A Baldwin SR-4 pressure cell and Foxboro strip-chart recorder were used to monitor pressure. To more closely simulate the stored energy (pneumatic) nominally present in typical fuel rods, lavite pellets were used in most tubes to reduce

the gas volume. The expansions observed in tubes tested without pellets were, however, no different. The only difference was the violence with which rupture occurred and, therefore, the size of the rupture opening (i.e., much larger in the tubes without pellets).

Inconsistent results observed in our early tests using surplus Dresden material led to ultrasonic testing of the samples. This inspection revealed variations of up to 10% of the wall thickness. Since ASTM specifications allow variations to this extent, we decided to introduce controlled defects into essentially defect-free material to determine what the effect would be on fracture stress and strain. Horizontal and circumferential line defects (to simulate damage which might occur due to handling or loading) and dimple defects (to simulate corrosion) were used (types of defects and their dimensions are shown in Fig. 4).

ORNL-DWG 70-233

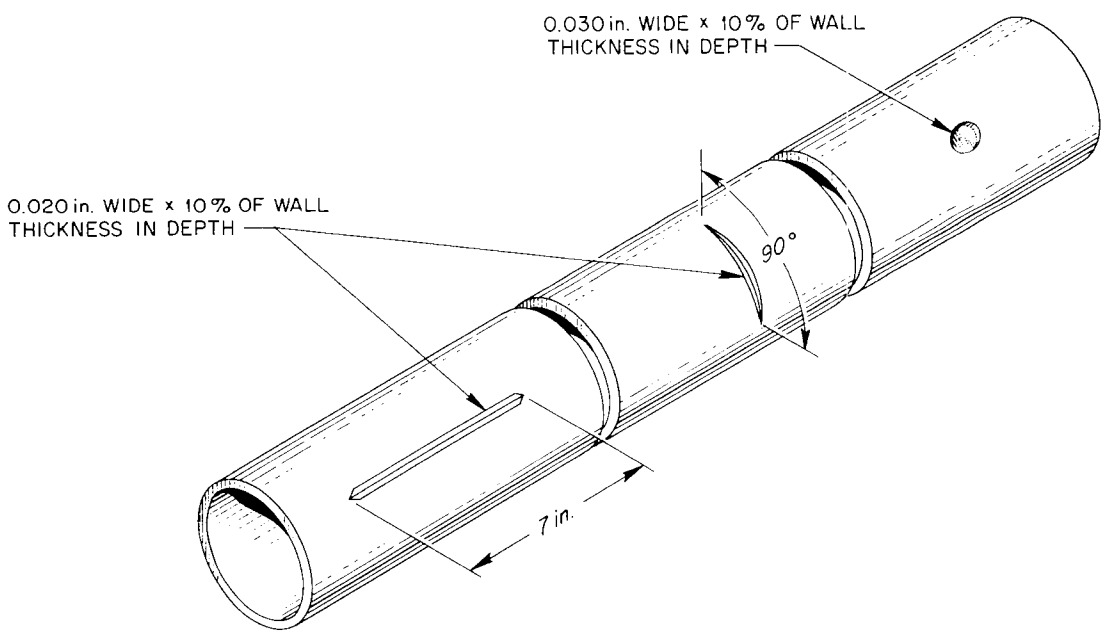

Fig. 4. Cladding Defects Used in Both BWR and PWR Type Tubing.

RESULTS

Circumferential expansions observed in tests at the five temperature levels selected are shown in Fig. 5, and complete results are given in Tables 1 and 2 in the appendix. The smallest range of expansions (50 to 70%) observed occurred at 2100°F; the largest (50 to > 140%)

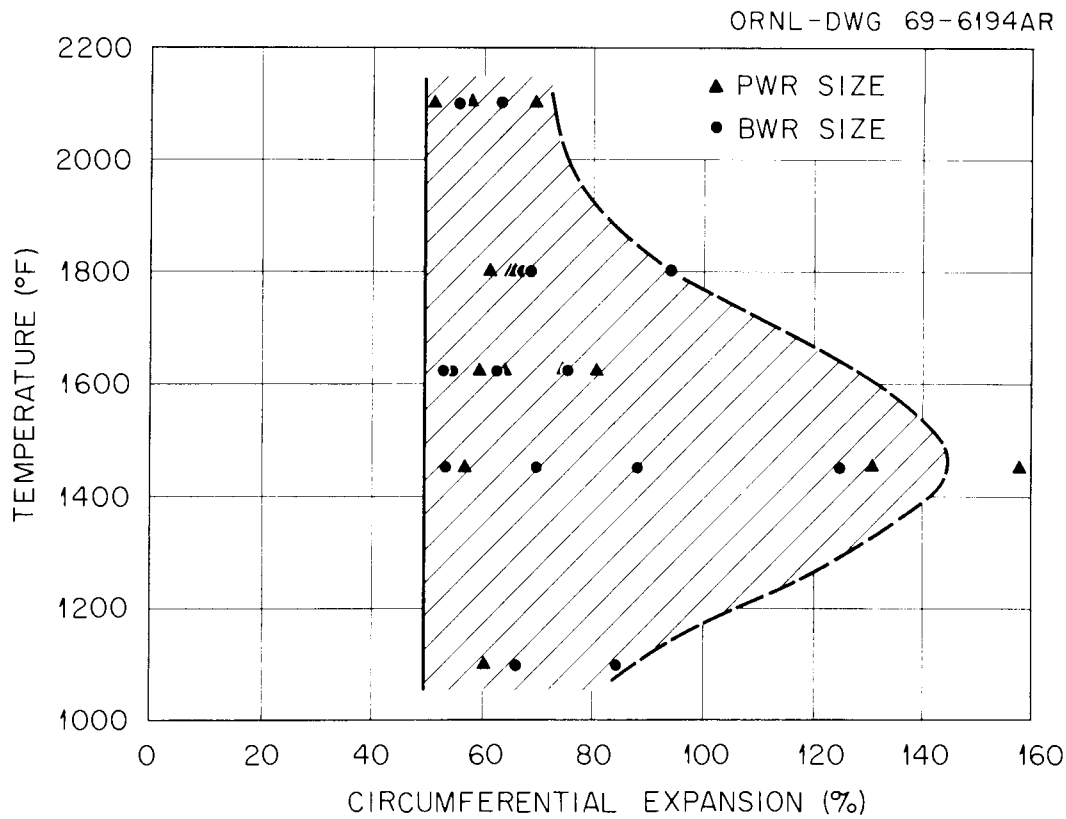

Fig. 5. Circumferential Expansion as a Function of Temperature in Isothermal Tests of Stress-Relieved Zircaloy Cladding.

occurred at 1450°F. These values were obtained by measuring the tubing circumference at the rupture location. The rupture opening was not included in this measurement so that the violence of rupture and its size does not influence the magnitude of strain reported. The ranges of expansion seen can be explained, in part, by variation in wall thickness from tube to tube. It has been shown in single rod transient

burst tests[1] that significant differences in ductility (factors of at least 2) can result from wall thickness variations. Despite the wide range of expansions in the present study, the minimum values are fairly consistent at about 55%. Moreover, all expansions were essentially symmetrical about the longitudinal axis of the tube (i.e., circumferential expansion was typically uniform). As mentioned earlier, uniform fuel rod expansions of 60% could block the entire coolant channel; therefore the minimum strain obtained (~ 55%) could very nearly cause total blockage if they occurred on the same horizontal plane. This does not say that a loss-of-coolant accident will result in the coolant channels through the core becoming totally blocked. There are many variables involved (location of break, size of break, horizontal plane on which swelling occurs, etc.) which will affect the degree and extent of blockage. However, the data presented here do indicate that Zircaloy-4 does have a high degree of ductility at temperatures associated with such an accident and, because of this, that the possibility of coolant channel blockage is real.

Points of local maximum expansion, as illustrated in Fig. 2 (p. 4), were seen along the hot zone in both BWR and PWR material. These are believed to result from nonhomogeneity of the material, and/or variation in wall thickness along the length of the tubing. Nondestructive testing has shown that the wall thickness did vary along the length of the tube by as much as 6% (BWR material) and 5.5% (PWR material) in some cases.

As mentioned previously, samples having defects simulating those resulting from handling, corrosion, etc., were also tested. Of five samples tested having dimple defects, only one failed in the defective area and then only after 117% expansion. The other four samples had expansions comparable to those observed in the undefected material (Fig. 6). Therefore, it seems clear that defects of this type will

---

[1]D. O. Hobson, M. F. Osborne, and G. W. Parker, "Comparison of Rupture Data from Irradiated Fuel Rods and Unirradiated Cladding," to be published in Nuclear Applications and Technology.

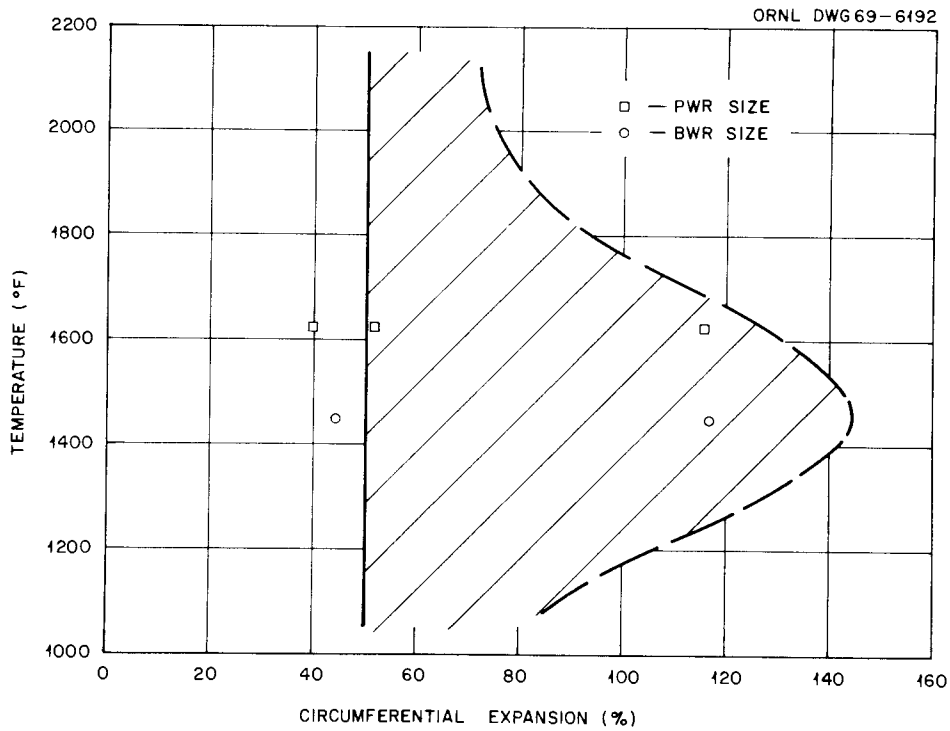

Fig. 6. Circumferential Expansion as a Function of Temperature in Isothermal Tests of Zircaloy Cladding Containing Dimple Defects. Shaded area indicates range of expansion as determined by isothermal tests of nondefective Zircaloy cladding. Data points shown are from cladding having dimple defects involving 8–10% of wall thickness.

not limit expansion. Similarly, none of the samples having circumferential line defects failed in the defective region, and all exhibited expansions consistent with those of undefected material. However, four of the five samples tested with longitudinal line defects failed in the defective area with expansions of from 20–40% (Fig. 7). This is substantially lower than the ductility of the nondefective tubing.

Although both ductility and failure location were influenced in the case of the longitudinal line defects, in none of the samples, regardless of type of defect, was an effect on rupture stress observed (see Fig. 8). In this figure the rupture stress of PWR and BWR size tubing, both with and without defects, as well as published tensile

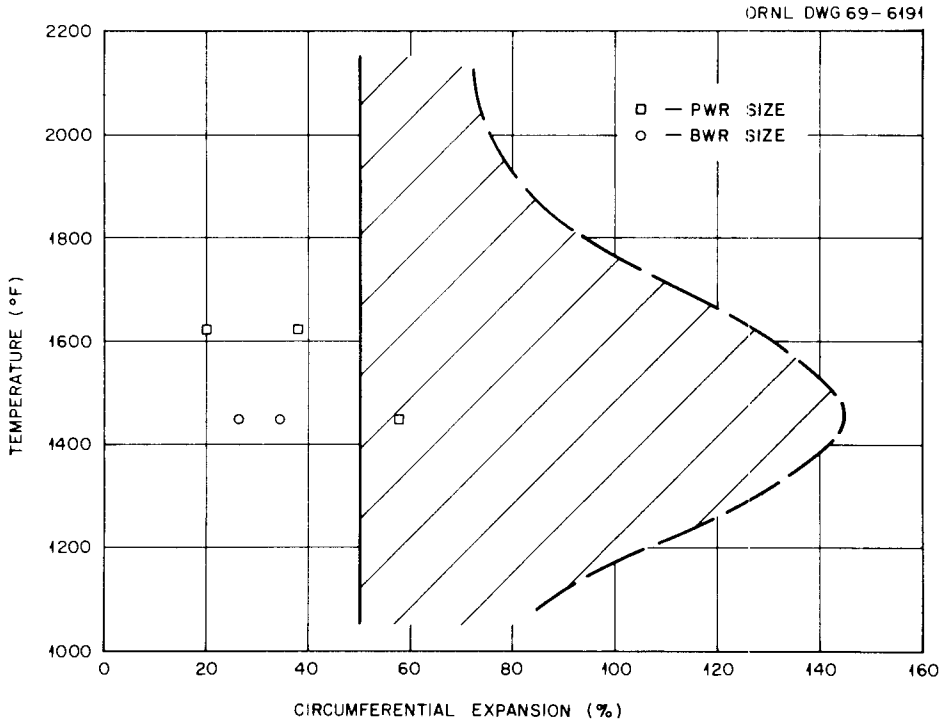

Fig. 7. Circumferential Expansion as a Function of Temperature in Isothermal Tests of Zircaloy Cladding Containing Longitudinal Defects. Shaded area indicates range of expansion as determined by isothermal tests of nondefective Zircaloy cladding. Data points shown are from cladding having longitudinal defects involving 8–10% of wall thickness.

data[2] are shown as a function of temperature. It is clear that, even in those samples in which swelling was reduced because of the defect, the rupture strength was not changed. The internal pressures (at rupture) represented here ranged from 70 psi (at 2100°F) to 2100 psi (at 1100°F) for BWR size tubes and 65 psi (at 2100°F) to 2250 psi (at 1100°F) for PWR tubes.

The ruptures observed in all of the tubes tested can be described as ductile. The size of the rupture opening ranged from about 1 in. in length by 3/4 in. in width for failure at 1100°F to the very small

---

[2]J. F. White, Recommended Property and Reaction Kinetics Data for Use in Evaluating a Light-Water-Cooled Reactor Loss-of-Coolant Incident Involving Zircaloy-4 or 304-SS Clad UO_2, GEMP-482, p. 80 (April 1968).

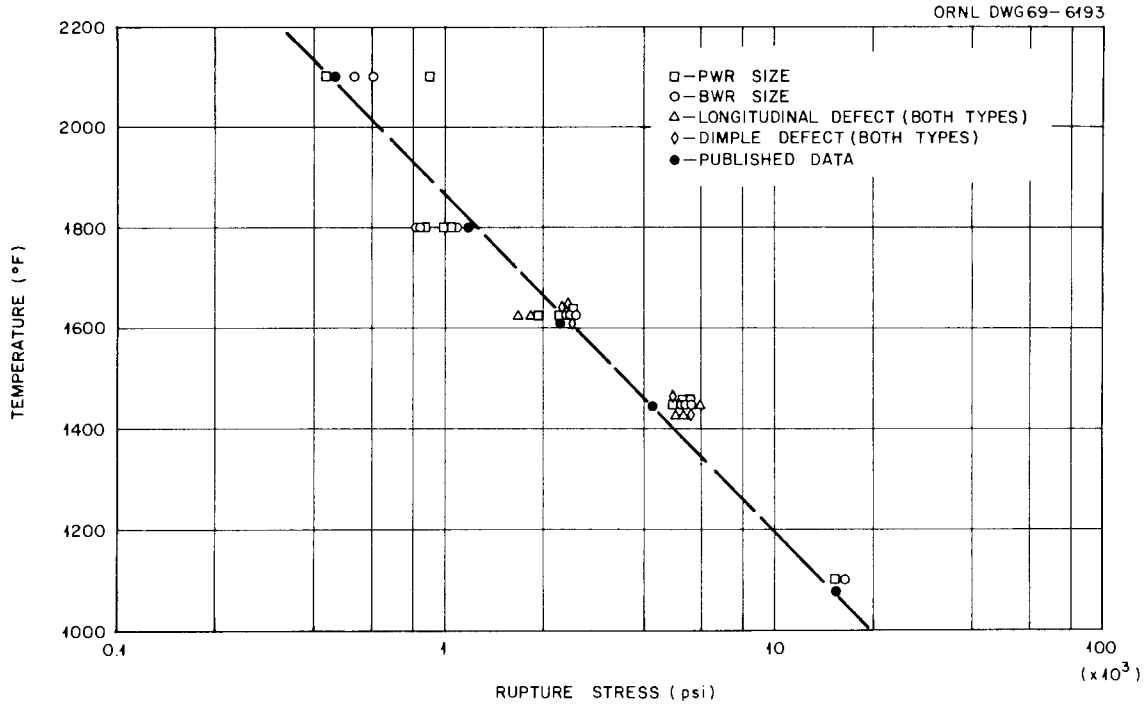

Fig. 8. Rupture Stress as a Function of Temperature in Isothermal Tests of Defective and Nondefective Zircaloy Cladding.

perforation for failure (seen in Fig. 9) at 2100°F. The failure geometries (size of rupture opening, expansion, etc.) shown here are typical of those observed at the temperature levels indicated with the exception of the expansion of I-S10 which was the greatest observed at 1450°F.

In none of our tests was the degree of swelling affected by the rate of pressurization. This was true even when rates were allowed to differ by as much as a factor of 2. For example, in two tests at 1800°F in which the pressurizing rates were 37 and 76 psi/min, the strains produced were 61 and 65%, respectively.

In view of the symmetry (uniformity) of swelling observed in our tests and the fact that the minimum strain was 50% or greater at all test temperatures, it was readily apparent that multirod tests should be run to determine the flow blockage resulting from simultaneously

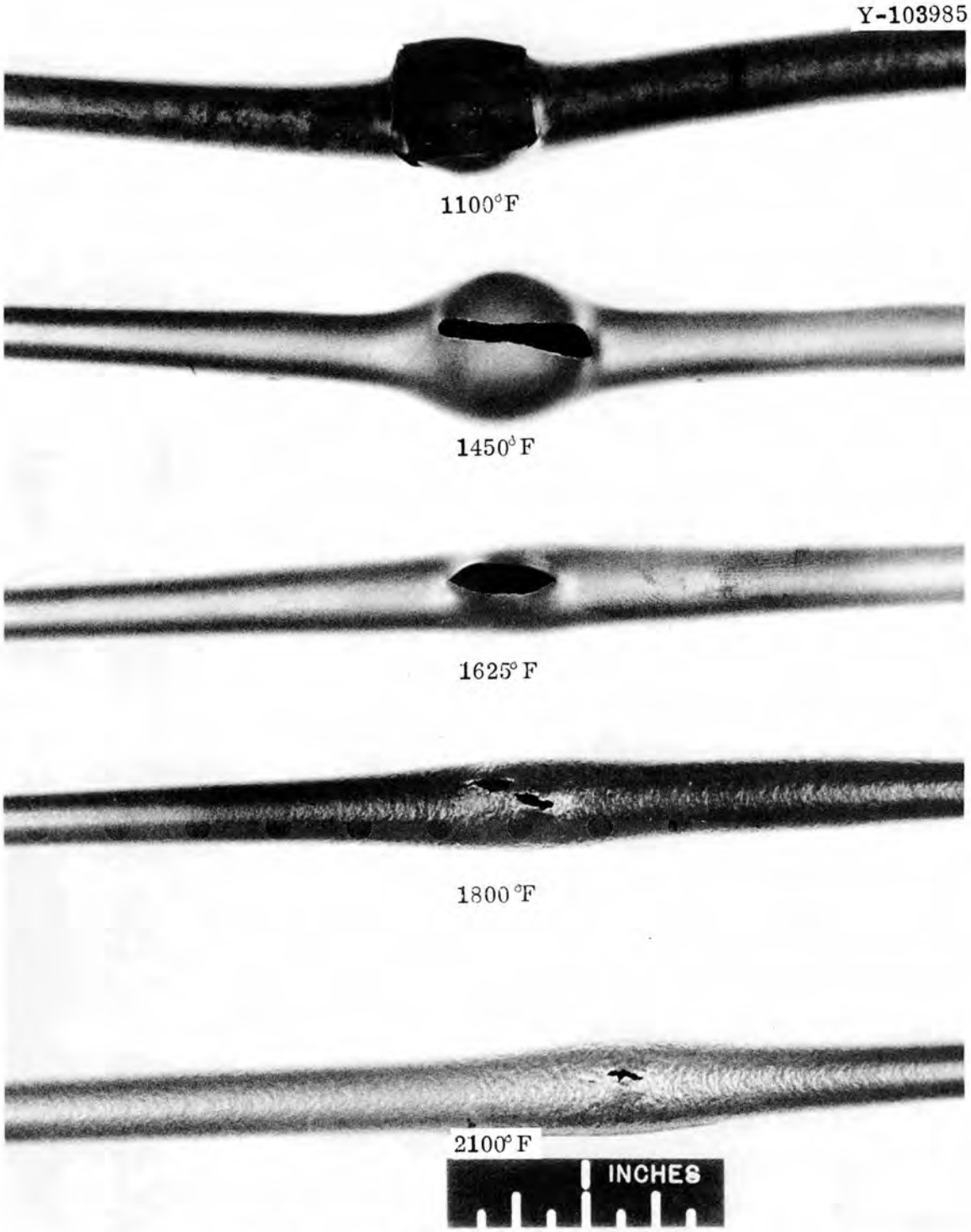

Fig. 9. Typical Fracture Geometries at the Indicated Temperatures.

deforming fuel rods. Multirod burst tests are currently being conducted on bundles of 13 rods of BWR size, and 32 rods of PWR size material.[3]

CONCLUSIONS

1. Ductility was greatest at 1450°F, just below the $\alpha \rightarrow \alpha + \beta$ transition point, but was generally high at all temperatures. The smallest range of expansions occurred at 1100 and 2100°F.

2. Burst strength was consistent with published data and was not affected by wall defects involving up to 10% of wall thickness.

3. Swelling was uniform with respect to the center line of the tube up to the time of failure, and in some cases multiple expansions were observed. The location of failure was random along the "hot zone" of the specimen.

4. The minimum expansion values observed in these tests ($\sim$ 50%) would indicate a maximum possible coolant channel blockage of about 85–90%. This, of course, assumes that the point of maximum expansion for each rod occurs on the same horizontal plane. While it is highly unlikely that the maximum possible blockage will occur under any given set of conditions, the potential for blockage offered by the strains observed strongly supports the need for multirod experiments to investigate blockage.

5. The presence of dimple (corrosion simulation) defects and circumferential line defects had essentially no effect on strain. On the other hand, longitudinal line defects reduced expansions to below that of the control materials.

6. No effect on expansion was produced by varying the rate of pressurization by as much as a factor of 2.

---

[3]R. D. Waddell, Jr., "Measurement of Light-Water Reactor Coolant Channel Reduction Arising from Cladding Deformation During a Loss-of-Coolant Accident," to be published in Nuclear Applications and Technology.

ACKNOWLEDGMENTS

The authors wish to thank T. T. Brightwell for running the burst tests and Vicki Sise of the Metals and Ceramics Division Reports Office for preparing this manuscript.

APPENDIX

Table 1. Results of Isothermal Burst Tests on BWR Size Zircaloy-4 Tubing

Specimen Number	Temperature (°F)	Rupture Pressure (psi)	Rupture Stress (psi)	Circumferential Expansion (%)	Remarks
I-L2	1625	300	2340	55	
3	1625	312	2430	75	
4	1625	318	2475	63	
5	1800	108	840	68	
6	1800	105	818	94	
7	1800	140	1090	68	
8	1450	715	5570	70	
9	1450	675	5260	88	
11	1450	693	5390	125	
16	1450	675	5270	53	
12	1100	2100	16,350	84	
25	1100	2000	15,550	66	
14	2100	78	608	56	
15	2100	69	538	63	
17[a]	1450	762	5930	35	Failed in defect
18[a]	1450	680	5290	26	Failed in defect
19[b]	1450	697	5430	117	Failed in defect
20[b]	1450	633	4930	45	Did not fail in defect
22[c]	1625	338	2630	62	Did not fail in defect
23[c]	1625	328	2550	62	Did not fail in defect
24[c]	1625	325	2530	65	Did not fail in defect

[a]Contained longitudinal defect.

[b]Contained dimple defect.

[c]Contained circumferential defect.

Table 2. Results of Isothermal Burst Tests on PWR Size Zircaloy-4 Tubing

Specimen Number	Temperature (°F)	Rupture Pressure (psi)	Rupture Stress (psi)	Circumferential Expansion (%)	Remarks
I-S1	1625	363	2475	59	
2	1625	315	2210	81	
3	1625	280	1910	64	
16	1625	390	2650	74	
4	1800	145	988	65	
5	1800	155	1050	61	
6	1800	125	852	67	
7	1100	2250	15,250	61	
8	2100	64	434	70	
20	2100	80	545	58	
9	2100	134	902	51	
10	1450	760	5150	158	
11	1450	730	4920	57	
12	1450	775	5260	131	
13[a]	1625	248	1670	20	Failed in defect
14[a]	1625	274	1860	39	Failed in defect
15[a]	1450	760	5150	58	Did not fail in defect
17[b]	1625	338	2270	117	Did not fail in defect
18[b]	1625	352	2370	40	Did not fail in defect
19[b]	1625	365	2450	52	Did not fail in defect

[a]Contained longitudinal defect.

[b]Contained dimple defect.

INTERNAL DISTRIBUTION

1–3. Central Research Library
4. ORNL – Y-12 Technical Library Document Reference Section
5–23. Laboratory Records Department
24. Laboratory Records, ORNL RC
25. ORNL Patent Office
26. Nuclear Safety Information Center
27. G. M. Adamson, Jr.
28. S. E. Beall
29. T. T. Brightwell
30. R. H. Bryan
31. W. B. Cottrell
32. F. L. Culler
33. J. E. Cunningham
34. W. K. Ergen
35. M. H. Fontana
36. J. H Frye, Jr.
37. W. R. Gambill
38. W. R. Grimes
39. W. O. Harms
40–42. M. R. Hill
43. D. O. Hobson
44. C. G. Lawson
45. R. A. Lorenz
46. T. H. Mauney
47. C. J. McHargue
48. H. E. McCoy
49. H. A. McLain
50. M. F. Osborne
51. G. W. Parker
52–76. P. L. Rittenhouse
77. D. B. Trauger
78–87. R. D. Waddell, Jr.
88. G. M. Watson
89. J. R. Weir, Jr.

EXTERNAL DISTRIBUTION

90. H. W. Behrman, RDT, OSR, AEC, Oak Ridge National Laboratory
91. C. W. Bills, AEC, Idaho Operations, Idaho Falls, Idaho
92–96. G. O. Bright, WRSPO, Phillips Petroleum Company, Idaho Falls, Idaho
97. G. M. Brown, Southern Nuclear Engineering, Dunedin, Florida
98. S. H. Bush, ACRS, WADCO, Richland, Washington
99–103. W. P. Chernock, Combustion Engineering, Windsor, Conn.
104. R. J. Colmar, DRL, AEC, Washington
105. D. F. Cope, RDT, SSR, AEC, Oak Ridge National Laboratory
106–110. P. R. Davis, Phillips Petroleum Company, Idaho Falls, Idaho
111–112. E. H. Davidson, AEC, DRDT, Washington
113. R. A. Dean, Gulf General Atomic, LWR Fuel Division, San Diego, Cal.
114. H. A. Dopchie, Association Vincotte, Rhode-Saint-Genèse, Belgium
115. R. Dunham, TVA, Knoxville, Tennessee
116. Harold Etherington, ACRS, Jupiter, Florida
117. Dieter Ewers, AEG Telefunken E313, 6 Frankfort/Main 70, AEG Hochhaus Siid, Germany
118. W. L. Faith, ACRS, San Marino, California
119. R. F. Fraley, ACRS, AEC, Washington
120. A. Giambusso, AEC, DRDT, Washington
121. J. E. Grund, Portland General Electric Company, Portland, Oregon

122. H. L. Hamester, DRDT, AEC, Washington
123. S. H. Hanauer, ACRS, the University of Tennessee
124. J. M. Hendrie, ACRS, Brookhaven National Laboratory, Upton, N.Y.
125. J. Hillary, Reactor Development Laboratory, Sellafield, Seascale, Cumberland, England
126–130. D. H. Imhoff, General Electric Company, San Jose, Calif.
131–133. R. J. Impara, RDT, AEC, Washington
134. J. E. Irvin, WADCO, Richland, Washington
135. H. S. Isbin, ACRS, University of Minnesota, Minneapolis
136. R. O. Ivins, Argonne National Laboratory, Argonne, Ill.
137. E. E. Kintner, DRDT, AEC, Washington
138. A. Lowe, Babcock & Wilcox, Lynchburg, Va.
139. H. G. Mangelsdorf, ACRS, Short Hills, N. J.
140. C. L. Matthews, RDT, OSR, AEC, Oak Ridge National Laboratory
141–143. J. E. McEwen, DRS, AEC, Washington
144. H. O. Monson, ACRS, Argonne National Laboratory, Argonne, Ill.
145–146. D. L. Morrison, Battelle Memorial Institute, Columbus, Ohio
147. A. A. O'Kelley, ACRS, Littleton, Colo.
148. David Okrent, ACRS, Argonne National Laboratory, Argonne, Ill.
149. N. J. Palladino, ACRS, Pennsylvania State University, University Park, Pa.
150. J. F. Palmer, Chalk River Nuclear Laboratory, AECL
151. D. R. Poulter, UKAEA, Reactor Group Headquarters, Risley, Warrington, Lancaster, England
152. A. J. Pressesky, DRDT, AEC, Washington
153. J.A.L. Robertson, Chalk River Nuclear Laboratories, AECL
154–155. C. Robbins, Atomic Industrial Forum, Inc., New York, N.Y.
156–160. J. B. Roll, Westinghouse NFD, Pittsburgh, Pa.
161. M. Rosen, DRL, AEC, Washington
162–166. M. F. Sankovich, Babcock & Wilcox, Lynchburg, Va.
167. W. Schikarski, Kernforschungszentrum Karlsruhe, Institute fur Angewandte Reaktor physik, Karlsruhe, Germany
168. J. M. Simmons, DRDT, AEC, Washington
169. E. E. Sinclair, DRDT, AEC, Washington
170. R. J. Slember, United Nuclear Corporation, Elmsford, N.Y.
171. W. R. Stratton, ACRS, Los Alamos Scientific Laboratory, Los Alamos, N. Mexico
172–176. S. A. Szawlewicz, DRDT, AEC, Washington
177–178. E. Veenard, Edison Electric Institute, New York, N.Y.
179. G. J. Walke, Consumers Power Company, Jackson, Michigan
180. C. H. Waugman, TVA, Chattanooga, Tennessee
181. J. F. White, General Electric NPS, Cincinnati, Ohio
182. C. W. Zabel, ACRS, University of Houston, Houston, Tex.
183. J. O. Zain, Idaho Nuclear Corporation, Idaho Falls, Idaho
184. Laboratory and University Division, AEC, Oak Ridge Operations
185–199. Division of Technical Information Extension