LOCKHEED MARTIN ENERGY RESEARCH LIBRARIES

3 4456 0513807 1

CENTRAL RESEARCH LIBRARY
DOCUMENT COLLECTION

OAK RIDGE NATIONAL LABORATORY

operated by

UNION CARBIDE CORPORATION

for the

U. S. ATOMIC ENERGY COMMISSION

ORNL-TM-2782

MICROSPHERE HANDLING TECHNIQUES

F. J. Furman, J. T. Meador, and J. D. Sease

OAK RIDGE NATIONAL LABORATORY
CENTRAL RESEARCH LIBRARY
DOCUMENT COLLECTION
LIBRARY LOAN COPY
DO NOT TRANSFER TO ANOTHER PERSON
If you wish someone else to see this document, send in name with document and the library will arrange a loan.
UCN-7969
(3 3-67)

NOTICE This document contains information of a preliminary nature and was prepared primarily for internal use at the Oak Ridge National Laboratory. It is subject to revision or correction and therefore does not represent a final report.

LEGAL NOTICE

This report was prepared as an account of Government sponsored work. Neither the United States, nor the Commission, nor any person acting on behalf of the Commission:

A. Makes any warranty or representation, expressed or implied, with respect to the accuracy, completeness, or usefulness of the information contained in this report, or that the use of any information, apparatus, method, or process disclosed in this report may not infringe privately owned rights; or

B. Assumes any liabilities with respect to the use of, or for damages resulting from the use of any information, apparatus, method, or process disclosed in this report.

As used in the above, "person acting on behalf of the Commission" includes any employee or contractor of the Commission, or employee of such contractor, to the extent that such employee or contractor of the Commission, or employee of such contractor prepares, disseminates, or provides access to, any information pursuant to his employment or contract with the Commission, or his employment with such contractor.

ORNL-TM-2782

Contract No. W-7405-eng-26

METALS AND CERAMICS DIVISION

MICROSPHERE HANDLING TECHNIQUES

F. J. Furman, J. T. Meador, and J. D. Sease

MARCH 1970

OAK RIDGE NATIONAL LABORATORY
Oak Ridge, Tennessee
operated by
UNION CARBIDE CORPORATION
for the
U.S. ATOMIC ENERGY COMMISSION

LOCKHEED MARTIN ENERGY RESEARCH LIBRARIES

3 4456 0513807 1

CONTENTS

	Page
Abstract	1
Introduction	1
Development Criteria	2
Transfer and Storage	4
Feeding Particles	5
Transfer Lines and Hoppers	10
Pinch Valve	12
Diverter Valve	13
Multiple Connections	14
Classification and Blending	15
Shape Separation	15
Vibratory Screening	18
Roller-Mike	19
Blending	20
Inspection	21
Sampling	22
Split-Image Microscopy	23
Light-Attenuation Sizing	23
Summary	24
Acknowledgments	24

MICROSPHERE HANDLING TECHNIQUES

F. J. Furman, J. T. Meador,[1] and J. D. Sease

ABSTRACT

Devices and techniques for remotely transferring, storing, classifying, blending, and inspecting 150- to 850-μ-diam microspheres were developed. Particles are transferred both pneumatically and by gravity and routed by air-operated valves. Storage hoppers feed into the transfer system. Classification is by both size and shape. Large batches are blended by pneumatic stirring and small batches by concurrent pouring at a precise ratio. Particle size is inspected by both automatic and manual optical methods.

INTRODUCTION

The fuel for high-temperature gas-cooled reactors is coated microspheres of thorium and uranium oxide or carbide.[2,3] The recycle fuel for these reactors contains ^{233}U, which is highly radioactive and requires remote handling.[4] In the remote processing and coating of the recycle fuel, automated devices are needed to transfer, classify, blend, and inspect the fuel microspheres. This report describes the development of such devices for a remotely operated pilot plant that will fabricate HTGR fuel. Although these devices were aimed toward a specific

[1]On loan from Reactor Division.

[2]W. O. Harms, "Carbon-Coated Carbide Particles for Nuclear Fuels," pp. 290–313 in Modern Ceramics – Some Principles and Concepts, ed. by J. E. Hove and W. C. Riley, Wiley, New York, 1965.

[3]R. E. Pahler, "Coated Particle Fuels for Civilian Gas-Cooled Reactors," p. 1 in Ceramic Matrix Fuels Containing Coated Particles, Proceedings of a Symposium held at Battelle Memorial Institute, November 5 and 6, 1962, TID-7654 (1963).

[4]E. D. Arnold, "Radiation Hazards of Recycle ^{233}U-Thorium Fuels," pp. 253–284 in Proceedings of the Thorium Fuel Cycle Symposium, Gatlinburg, Tennessee, December 5–7, 1962, TID-7650 (July 1963).

end, the ideas can be utilized where automated handling of microspheres or ball bearings is required.

DEVELOPMENT CRITERIA

The objective of the project is the coating of the fueled microspheres with multiple layers of pyrolytic carbon and possibly silicon carbide to retain fission products during irradiation.[5,6] The flowsheet, depicted in Fig. 1, lists the various particle handling steps required in the processing of the coated-particle fuel.[7] Typical properties of the particles and coatings are shown in Table 1.

The change in diameter and density of the particles as they move through the process requires considerable flexibility in the handling equipment. Some typical oxide microspheres coated with both low- and high-density pyrolytic carbon are shown in Fig. 2. The particles are handled in batches with small size variations ($< 100\ \mu$) to minimize segregation and packing during transfer. The particles coated with low-density pyrolytic carbon are quite fragile and must be handled very gently to avoid damage to the coating.

Remote processing required the development of automated equipment that is simple, highly reliable, and easily maintainable. For the pilot plant, our development was directed toward process equipment that could be scaled up to full production facilities. The processing requirement was 10 kg/day of bare particles. A typical batch of 250-μ-diam uncoated particles contains approximately 12,000 particles per gram.

For clarity the particle handling equipment reported here is divided into three categories: transfer and storage, classification and blending, and inspection. The transfer and storage section covers

---

[5]J. T. Meador, S. E. Bolt, and F. C. Davis, Status and Progress Report for Thorium Fuel Cycle Development Dec. 31, 1966, ORNL-4275, pp. 57–81.

[6]F. J. Furman, J. D. Sease, et al., Status and Progress Report for Thorium Fuel Cycle Development 1967–1968, ORNL-4429, pp. 70–83.

[7]A. L. Lotts and R. G. Wymer, Economics and Technology of HTGR Fuel Recycle, ORNL-TM-2377 (October 1968).

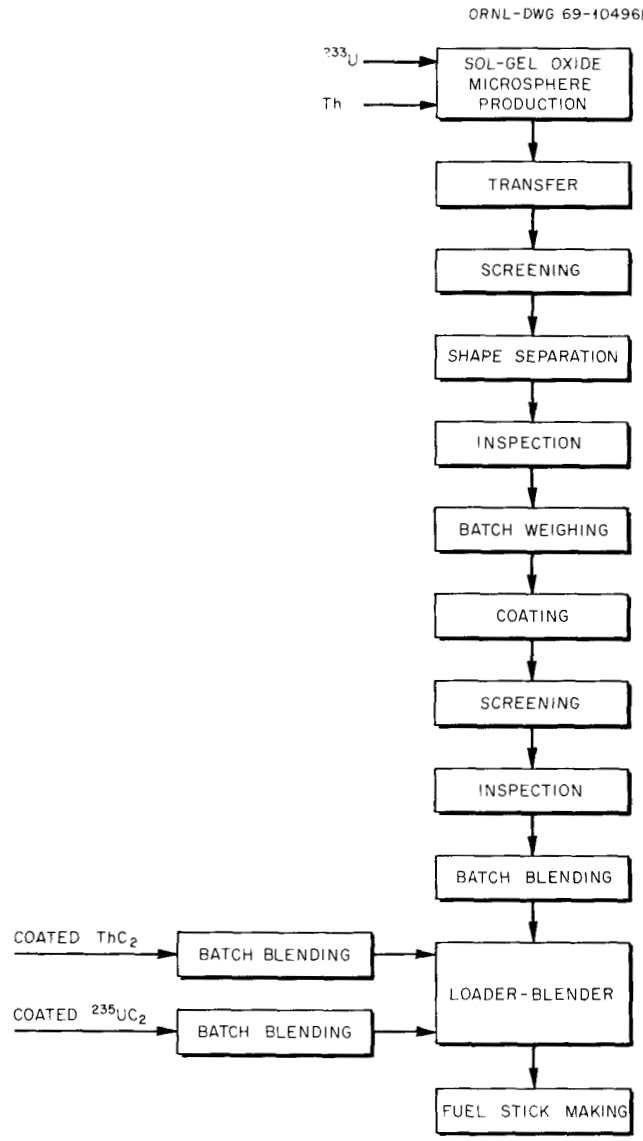

Fig. 1. Particle Handling Flowsheet.

Table 1. Properties of Fuel Microspheres During Processing

Material	Density (g/cm^3)	Thickness (μ)	Particle Diameter (μ)
Oxide microsphere	10.0		150–600
Low-density pyrolytic carbon	1.0	50	250–700
Silicon carbide	3.2	20	290–740
High-density pyrolytic carbon	1.9	40	370–820

Fig. 2. Pyrolytic-Carbon-Coated Oxide Microspheres. 100×.

transfer lines, particle feeding and dispensing devices, and storage hoppers. The classification and blending section covers screening, shape separating, and two types of blending. The inspection section covers sampling and size determination.

TRANSFER AND STORAGE

For high production rate or, in our case, highly radioactive material, it is most important to eliminate physical handling of the material by operators. Thus, methods to transfer material over preselected routes by automatic equipment have been developed. The principal means of transfer are pneumatic and gravity lines extending from one operation or storage hopper to another. Associated with the transfer lines and operations are various forms of particle feeder devices, line connections, and line diverters. An integral part of the automatic transfer system is the storage hoppers.

Feeding Particles

In particle handling, feeding characteristics required range from feeding one particle at a time for inspection to feeding in a broad monolayer for monitoring alpha radiation emitted from contamination in the coating. Devices having feed rates from 1 to 2 particles per second to 1 kg/min were developed.

In our initial development work, we found the V-trough vibratory feeder most valuable. It could be adapted to a variety of feeding requirements. As shown in Fig. 3, it consists of a hopper or funnel emptying into a tube leading to the V-trough. This V-trough is mounted

ORNL-DWG 68-13271

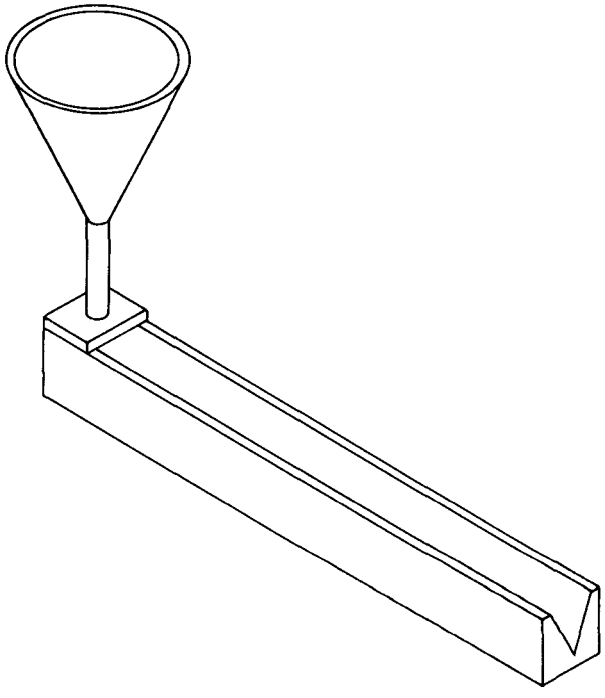

Fig. 3. V-Trough Vibratory Feeder.

on a vibrator. Since the tube is attached to the vibrating base, particles will not bridge as long as the tube diameter is at least four to five times that of the largest particle being handled. The troughs were generally 5 in. long. Four factors control the rate of feed: (1) the gap between the entrance tube and the base of the V-notch, (2) the

amplitude of vibration, (3) the angle of vibration, and (4) the slope of the V-notch. The tube leading into the V-notch is threaded so that height can be adjusted. Also the trough is flattened below the tube so the tube can be moved very close to the bottom of the trough. The amplitude of vibration would, of course, vary the feed rate considerably. The angle of vibration was generally set at that recommended by the manufacturers of the vibrators. Although the trough was usually horizontal, the distance between particles and the velocity of the particles coming from the V-trough could be varied considerably by varying the slope of the trough and vibrator. A major advantage of this type of feeder is that a single stream of particles can be obtained with ease. This type of particle stream proves extremely useful in a number of applications. However, the feed rates are somewhat slow, generally a few particles per second. Higher feed rates can cause difficulty in assuring a single stream of particles. However, if this is not a requirement, considerably higher feed rates can, of course, be obtained.

For process control, a light-attenuation electronic particle size analyzer (see the section on Inspection) determines the size of individual particles at rates up to 3000 particles per second. To feed this instrument, we developed a high-speed pneumatic particle singularizer, shown in a cross section in Fig. 4. The spacing between the jet tube and the delivery tube affects the delivery rate and the tendency of the particle to clog at the inlet of the delivery tube, and it must be adjusted to suit particle size and other variables. Since the fuel particles must exit one at a time, the internal diameter of the delivery tube is small enough to keep two or more particles from entering abreast. The length of the delivery tube is correlated with particle separation and the delivery count per minute. Figure 5 relates the particle delivery rate to the air pressure.

Figure 6 is an enlargement of a 16-mm movie film taken to determine particle spacing obtained with the singularizer. The peculiar shape of the pattern exhibited by the beads, which are round, was caused by a combination of distortion by the prismatic camera lens and the distance traveled during the 2.5×10^{-4}-sec exposure. Although the spacing of

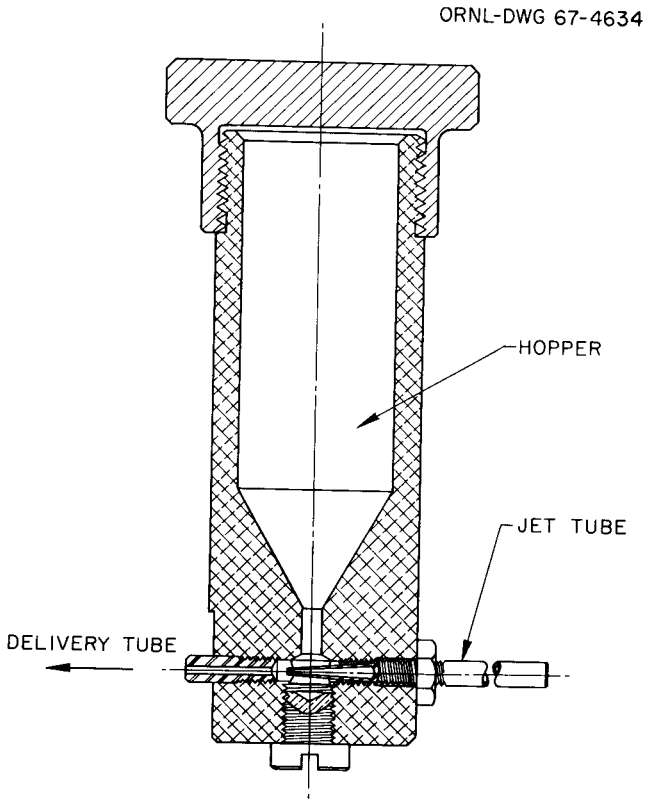

Fig. 4. Particle Singularizer.

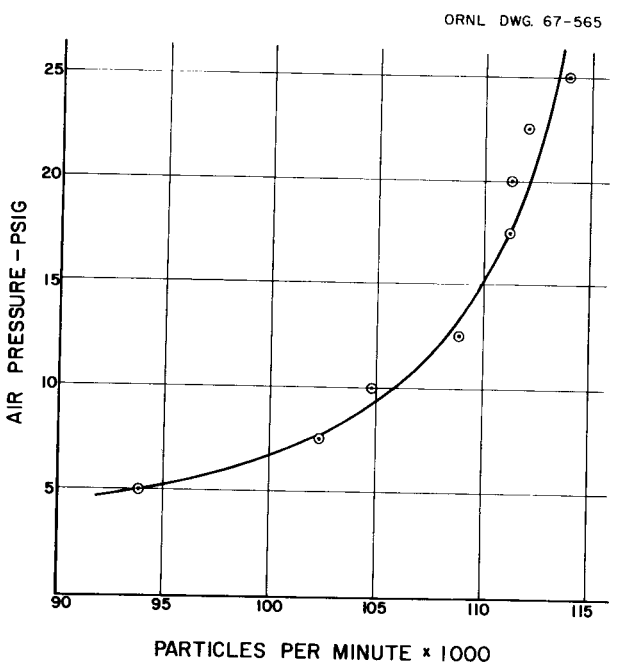

Fig. 5. Variation with Air Pressure of Delivery Rate from Particle Singularizer.

MAXIMUM DENSITY

IRREGULAR GROUPING

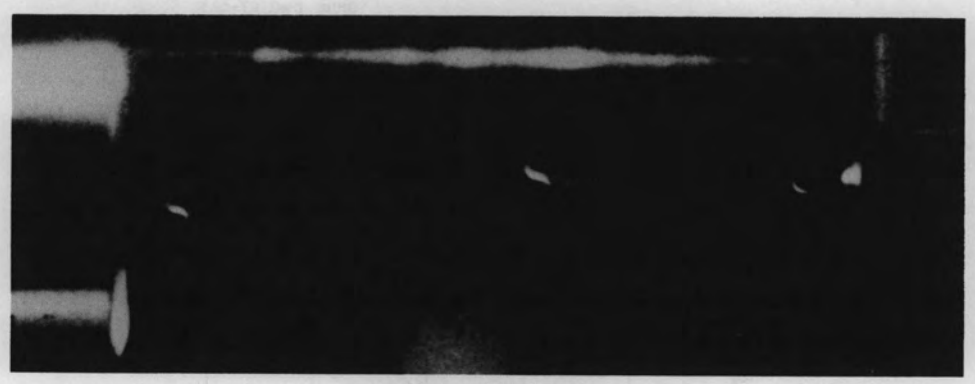

WIDE SPACING

Fig. 6. Typical Single-Frame Enlargements From High-Speed Motion Pictures Showing Particle Distribution. 1.5×.

the particles varied considerably, the minimum spacing distance at the face of the discharge tube is 0.100 in. This spacing should be acceptable for the analyzer.

When a layer of particles is desired, the device shown in Fig. 7 is used. The particles are put into the multiple hopper and flow from it into the dispenser. The multiple hopper outlets are positioned to within a few particle diameters of the vibrating plate. This close spacing prevents the particles from overflowing the dispenser. One side of the dispenser has six inverted V-shaped tunnels through it. These

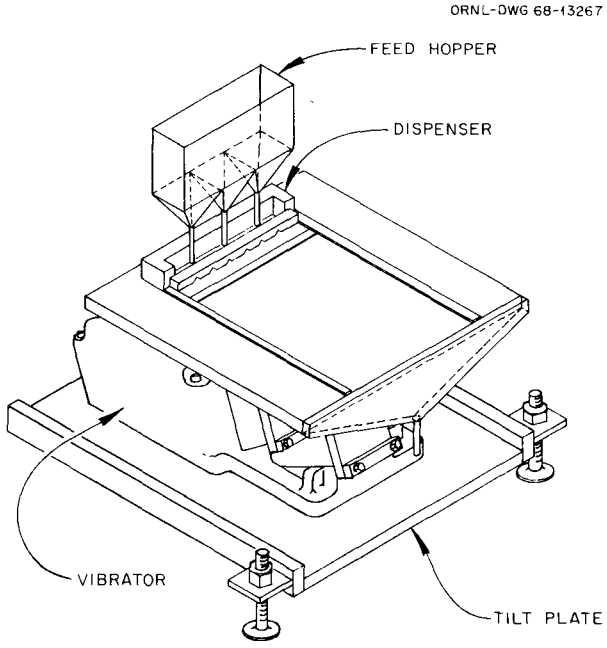

Fig. 7. Monolayer Feed Plate.

tunnels are large at the rear of the block (i.e., the feed hopper side) and decrease in size until at the feed side of the block they are approximately five to six times as wide as the particle diameter. The purpose of this dispenser is to restrict the flow of particles to a constant rate. After the particles pass through the inverted V's, they encounter a slight rise (approx 0.002 in.) in the plate on which they are moving. This rise holds the particles together so that they form a dense monolayer. In our preliminary development a strip of Scotch tape served as

the step in the particle flow plate. A typical flow rate for a 6-in.-square monolayer plate was 16 cm^3/min. The rate would, of course, vary considerably with the size of the particles and the V-notches.

For shape separation, it is necessary to feed particles into a plate at a single point. A device to accomplish this is seen in Fig. 8. It requires vibration to prevent blockage. As shown in the figure, the feeder can be adjusted to handle a number of different particle sizes and flow rates. Typical flow rates from such a feeder are 200 to 500 g/hr.

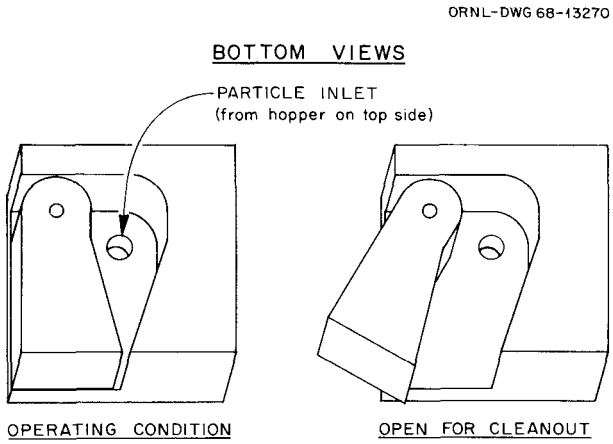

Fig. 8. Variable-Orifice Particle Feeder.

One further method of feeding particles is the pinch valve. This cutoff valve to be described in a following section is pneumatically operated, and the flow of particles through it can be regulated by pulsing it open and closed.

Transfer Lines and Hoppers

The transfer lines are of two types: gravity and pneumatic. The gravity lines are 3/8- to 1/2-in.-OD tubing sloped 45° or more. The pneumatic lines are the same sizes and can transfer particles over a 50-ft length and a 15-ft rise in elevation. The air can be stopped during transfer, and the particles will restart when the air is again turned on.

To transfer particles from one place to another, the particles start out in hoppers such as illustrated in Fig. 9. The pneumatic feed hopper is fed from the side at a tangent to the hopper wall to prevent damage to the particles. In this line a valve can be shut to enable pressurization of the hopper. With pressurization of the hopper the particles are conveyed through the tube running to the hopper bottom. From the gravity feed hopper the particles flow through an orifice with a diameter approximately 6 to 15 times the diameter of the particles. A pinch valve is sometimes placed in the hopper outlet line to more accurately regulate the particle feed rate.

Particles also can be transferred by a jet made from a standard T tubing connection. The particles are allowed to flow into the control leg of the T. Air at approximately 20 psi is fed to one arm of the connection, jetting the particles out the other arm. The particle inlet

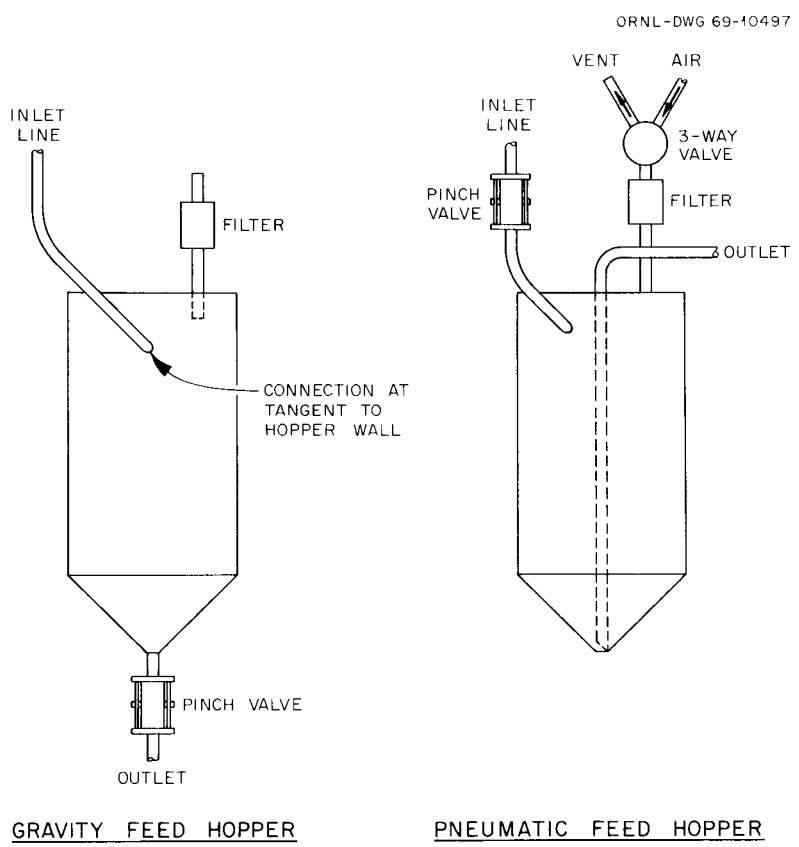

Fig. 9. Hoppers.

leg must be pressurized or sealed to prevent particles from being blown back up the inlet. In spite of the violent jetting action, no damage occurs to the particles. Even when the particles coated with fragile low-density pyrolytic carbon are transferred, only a slight amount of sooting is seen.

Pinch Valve

The pinch valve, which can be operated either pneumatically or hydraulically, is ideal for handling delicate particles. This valve, shown in Fig. 10, consists of an externally pressurized length of plastic or rubber tubing. When the pressure is applied, the tube collapses, stopping the flow of particles. This valve can also be used to regulate the flow of particles by pulsing the pressure to the valve; the valve is opened and closed allowing an intermittent stream of particles through.

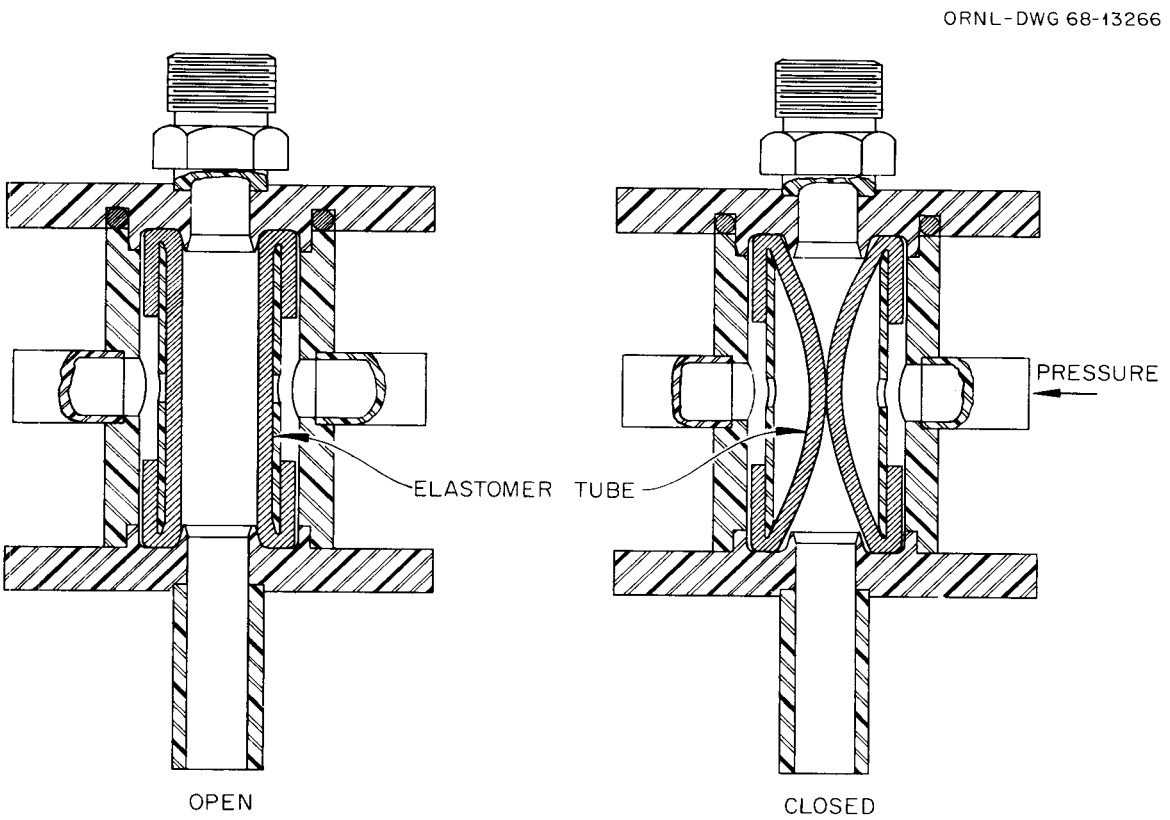

Fig. 10. Pinch Valve.

The particle flow rate can be regulated by merely adjusting the pressure applied to the valve to vary the closure of the valve. We use this type valve on 1/4-in.-diam tubing, although pinch valves for any size line could be fabricated.

Diverter Valve

The diverter valve, which can be used in any location in the transfer lines, switches the direction of particle flow from one line to another. It has a smooth, slightly curved internal bore in either position, as shown in Fig. 11. A pneumatic operator moves a rack and pinion

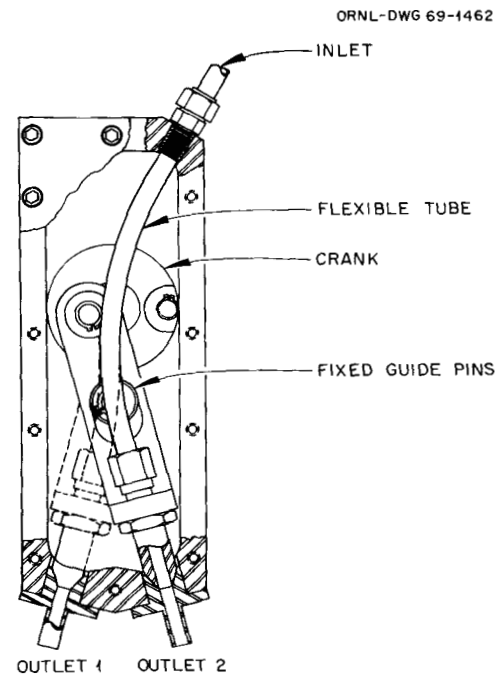

Fig. 11. Diverter Valve.

attached to the crank. When the crank turns, the flexible tube is lifted and, guided by the crank and the fixed guide pin, moved to the other outlet. Since the line is disconnected during the operation, the device cannot be adjusted while particles are flowing in the line. However, provision is made for catching and disposing of particles that might escape from the line during valve operation. The diverter valves

currently in use are for 3/8 in. tubing, although other sizes can be fabricated.

Multiple Connections

For joining two transfer lines a Y connection is used. This connection is simply two incoming lines connected into the outgoing line, as shown in Fig. 12. When the incoming lines are less than 20° apart, no blowback up the opposite line will occur; hence, the Y connection can be used for either pressurized or gravity transfer. On gravity

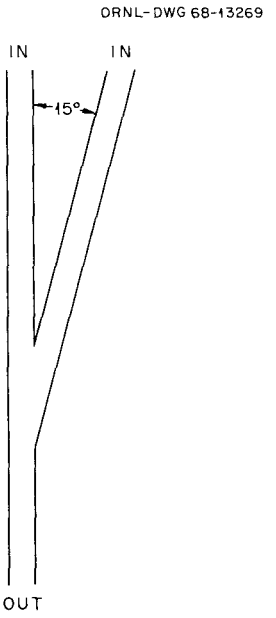

Fig. 12. Transfer Line Y Connection.

transfer or transfer starting as pressurized and ending in gravity large numbers of connections can be made. To connect more than two lines into a single line, each incoming line is joined to a 1- to 2-in. cylinder so that the particles feed in on a tangent and swirl down into a funnel where the particles continue by gravity. This apparatus is shown in Fig. 13. The cylinder is screened off at the top to provide for venting without escape of particles. The inlet lines can be either gravity or pressurized transfer lines.

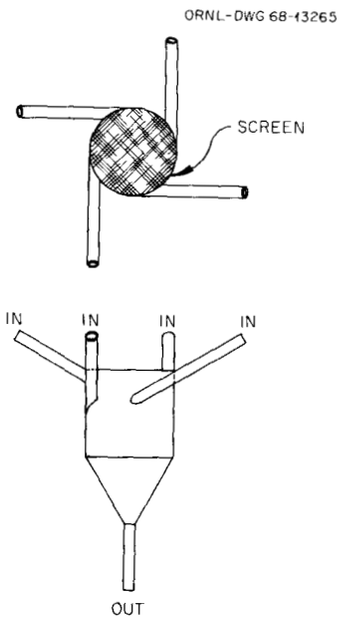

Fig. 13. Transfer Line Multiple Connection.

CLASSIFICATION AND BLENDING

Size and shape classification steps are required in the processing of the microsphere fuel. Size classification is primarily performed to eliminate over- and undersized particles from a batch, although various development operations occasionally require small amounts of accurately sized particles. Shape separation eliminates cracked, broken, or misshapen microspheres in the as-received particle batches and badly misshapen particles after coating.

Shape Separation

To eliminate badly misshapen particles a shape separation is performed before some of our operations. We developed a new method using vibration and gravity. A previous system employed a flat-plate vibratory feeder that was tilted slightly upward in respect to the direction of feeding action. Particles were fed onto the middle of the plate; the spherical particles, which are not greatly affected by the vibratory action, rolled down the plate while the vibratory action moved the nonspherical particles up the plate. The new system, Fig. 14, consists of

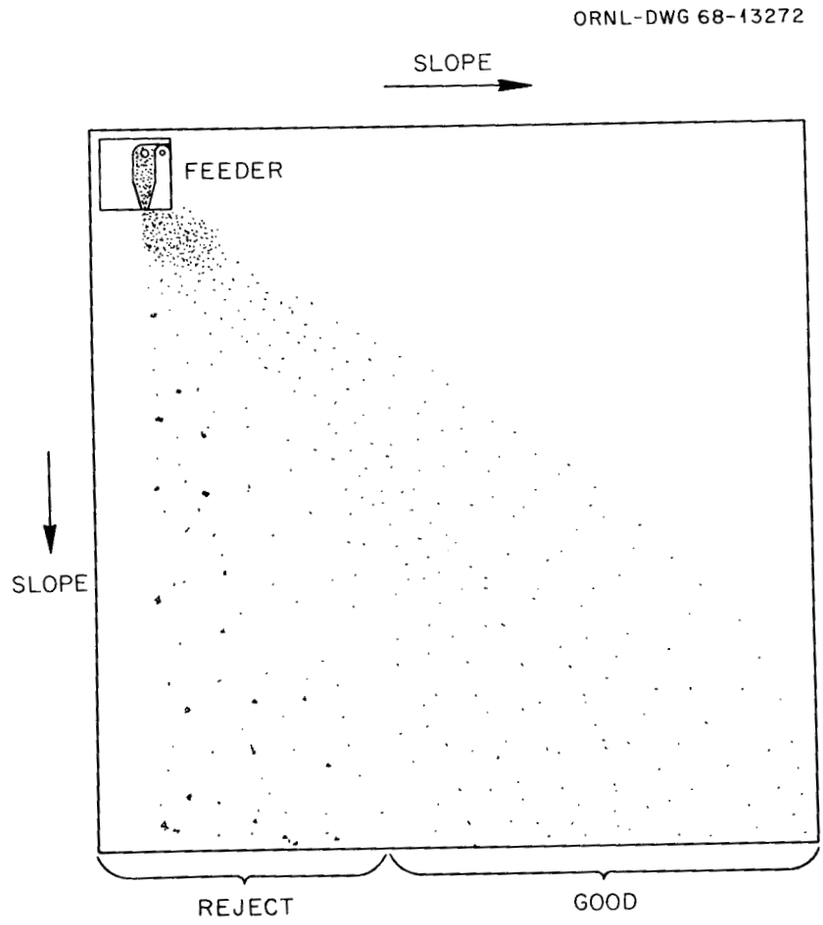

Fig. 14. Shape Separator Without Guide Rail.

a flat-plate vibratory feeder with the plate tilted slightly downward in respect to the direction of feeding action and tilted also 90° to this direction. Typical tilts are downward 1/2° and sideways 2°; however, these angles vary with the type of material being separated. Particles are fed onto the plate at its highest point. The round particles, which are unaffected by the vibrating force, roll essentially perpendicular to the line of feed, while the nonspherical particles are fed along the plate with the degree of roundness dictating their angle of feed. Because the particles are separated through an angle of less than 90° instead of 180°, the new system is faster and shows less particle interference. In addition, higher controlled feed rates without excess bouncing of the particles are permitted by the much lower vibratory feeding amplitude required because the particles are being fed essentially level or slightly downhill instead of uphill.

An advanced version of the shape separator system is shown in Fig. 15. The main difference is a curved guide rail placed so that the particles leaving the feeder are strung out along it. Guiding the particles away from the feed block in this manner allows the nonspherical particles to vibrate away from the main line of particle flow with less interference but with somewhat reduced feed rate.

Figure 16 shows the relative portions of particles of a typical microsphere sample separated without the guide rail. As the graph shows, all particles with the maximum-to-minimum diameter ratio greater than 1.2 and most of those with a ratio greater than 1.15 were eliminated.

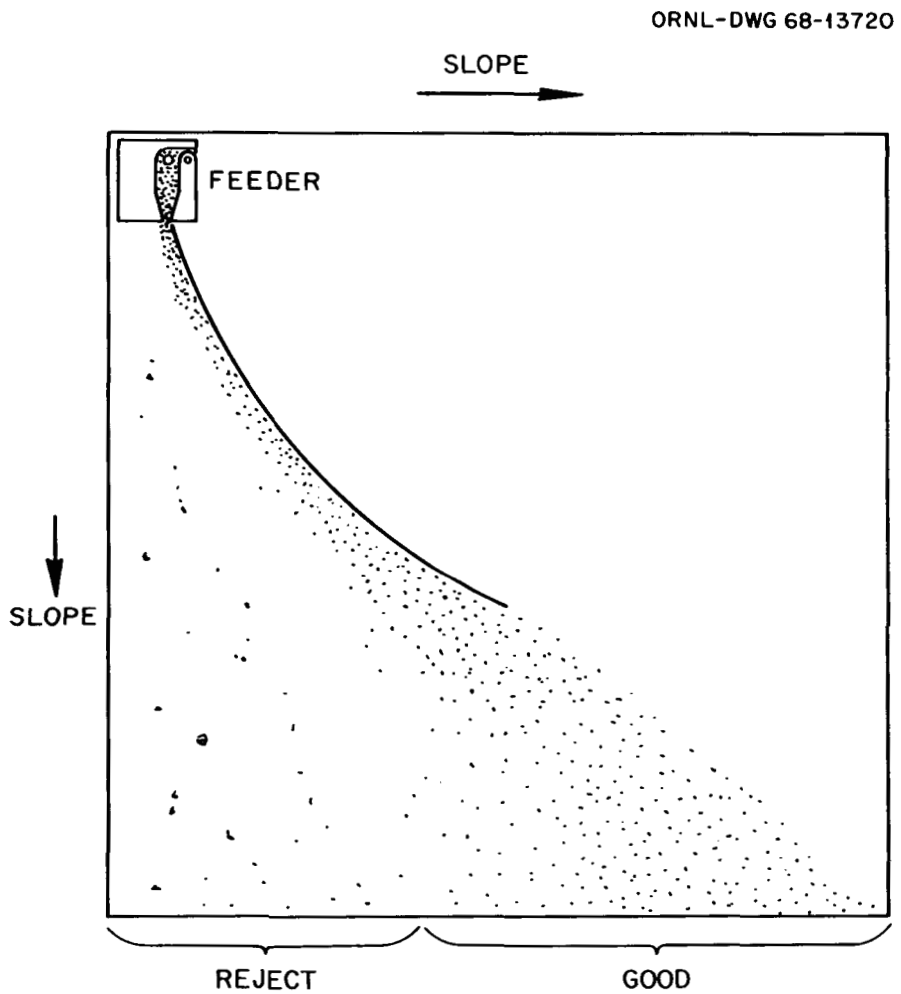

Fig. 15. Shape Separator with Guide Rail.

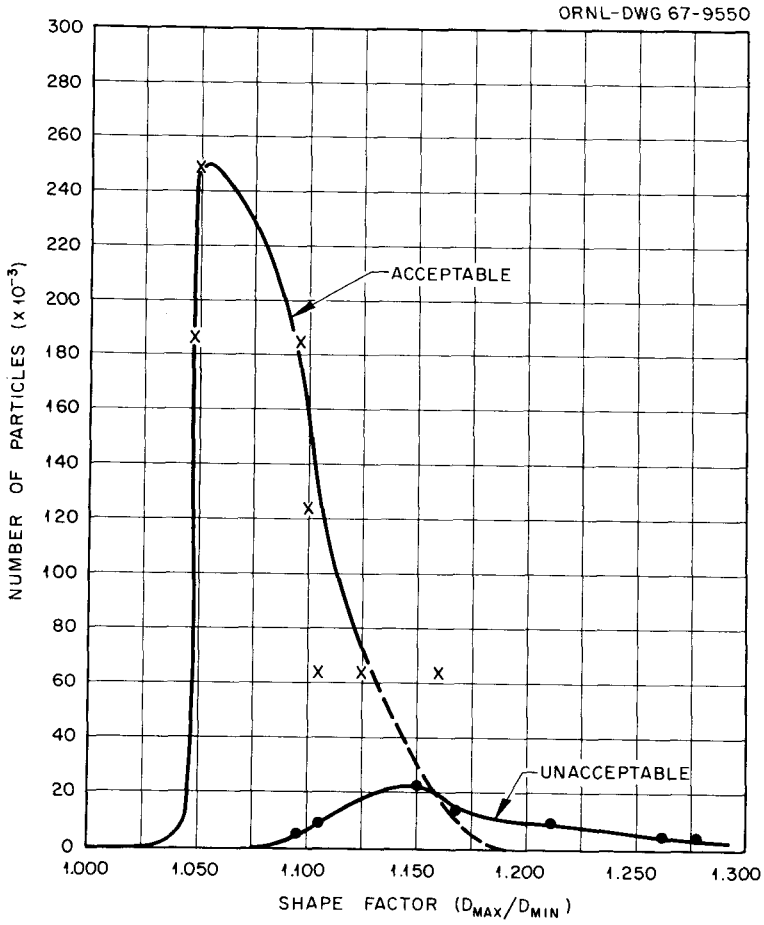

Fig. 16. Shape Distribution for Particles Accepted and Rejected by Separator Without Guide Rail.

Vibratory Screening

Our process requires vibratory screening to remove both undersize and oversize particles. For development work, the common screening techniques are used. However, for production work more easily maintained screening devices are required. With our highly spherical particles normal woven screens quickly became blinded. Micromesh screens, screens with holes etched in a metal plate, minimize blinding and are considerably more accurate than woven wire screens. Higher vibrations or tapping reduces blinding on both types but does not eliminate it on either type. Hence, arrangements must be made to remove blinded particles by brushing or ultrasonic immersion.

To minimize the size of the equipment, both the oversize and undersize particles are removed by one apparatus. The screens are placed one above the other, as shown in Fig. 17, with a baffle between to direct particles passing through the oversize screen to the starting point on the undersize screen. One disadvantage of such an arrangement is the difficulty of cleaning.

A typical screening flow rate for 260-μ particles of 10 g/cm^3 particle density is 10 g/min across a screen 3 in. wide. At this flow rate on an 8-in.-long screen efficiencies up to 85% can be obtained. Slower flow rates will give higher efficiencies.

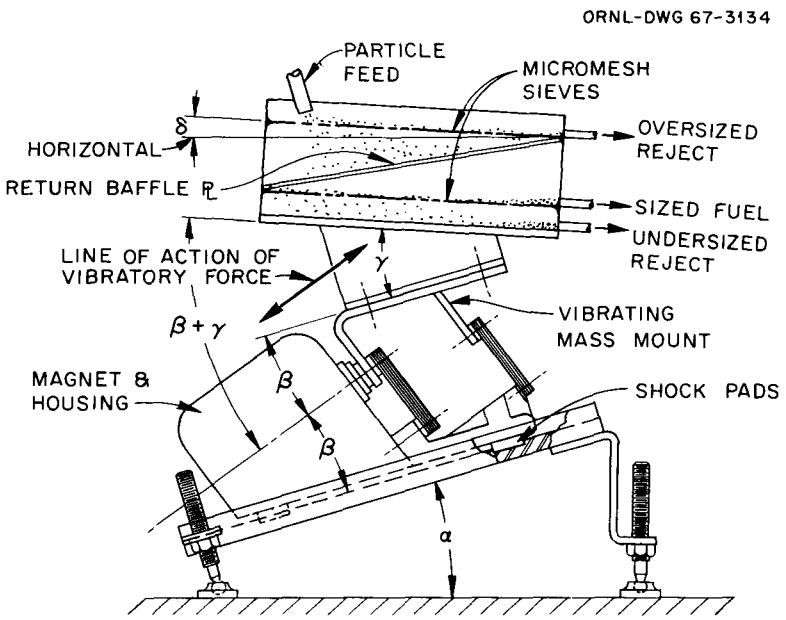

Fig. 17. Apparatus for Vibratory Screening.

Roller-Mike

For accurate separation of particles into batches with particle size range of as little as 2 to 3 μ, a Roller-Mike[8] can be used. Shown in Fig. 18, it consists of two hardended steel cylinders placed side by side with a slight angle between them. These cylinders or rollers are

[8]Roller-Mike Company, Brooklyn, N. Y.

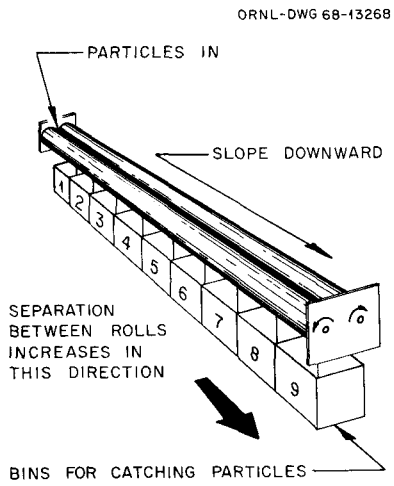

Fig. 18. Roller-Mike.

tilted so that the apex of the angle is on the upper side. Particles are fed one at a time onto the upper side of the rollers. As the rolls are turned, particles slowly move down the rolls and fall between them on reaching a point where the rolls are separated sufficiently. The particles are collected in separate zones beneath the rolls. If one desires a specific size range, a batch of particles can be run through the Roller-Mike and the particles in the specific size range collected. This operation can be repeated on the batch of particles collected in the zone of the desired size range to further eliminate particles outside that range. Separation of large numbers of particles with the Roller-Mike is extremely laborious and is used only when particles are required for development of other equipment.

Blending

We need two types of blending. One type is blending of similar batches of particles to assure homogeneity in a large batch of product. The type of blender for this is shown in Fig. 19. The particles spout up through the core and are distributed back to the bed. The bed is drained off at numerous locations into the core and returned to the top of the bed. This causes a constant mixing action of the bed.

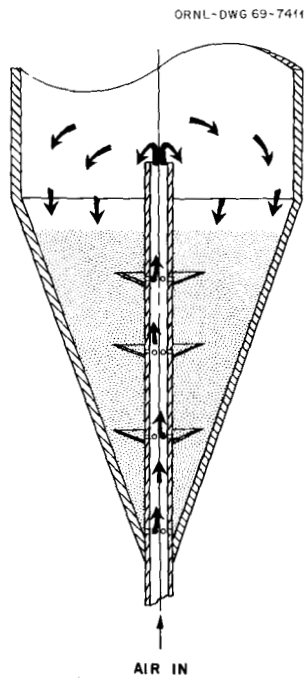

Fig. 19. Batch Blender.

The second type of blender is used when particles differing in either size or density are to be mixed. Because of their high sphericity, the microspheres must be blended where they are to be used. Any vibration or excessive movement of the beds causes the different types of particles to segregate. To prevent this segregation, the particles are blended by concurrent pouring into the desired receiver. Hence, the blender consists of hoppers with accurately adjustable orifices feeding into the same location, as shown in Fig. 20. The orifices are preadjusted by stepping motors to the correct opening and closed by gates. The hoppers are then filled with the desired amount of particles. The gates are opened by a solenoid actuater, and the particles flow out at the predetermined rate. Eddy-current meters monitor the flow. (The pyrolytic-carbon-coated particles we use are electrically conductive.)

INSPECTION

Inspection of the particles for size must begin with sampling. After a sample of the proper size is obtained, the sample particles are individually measured. For the most accurate work, a split-image

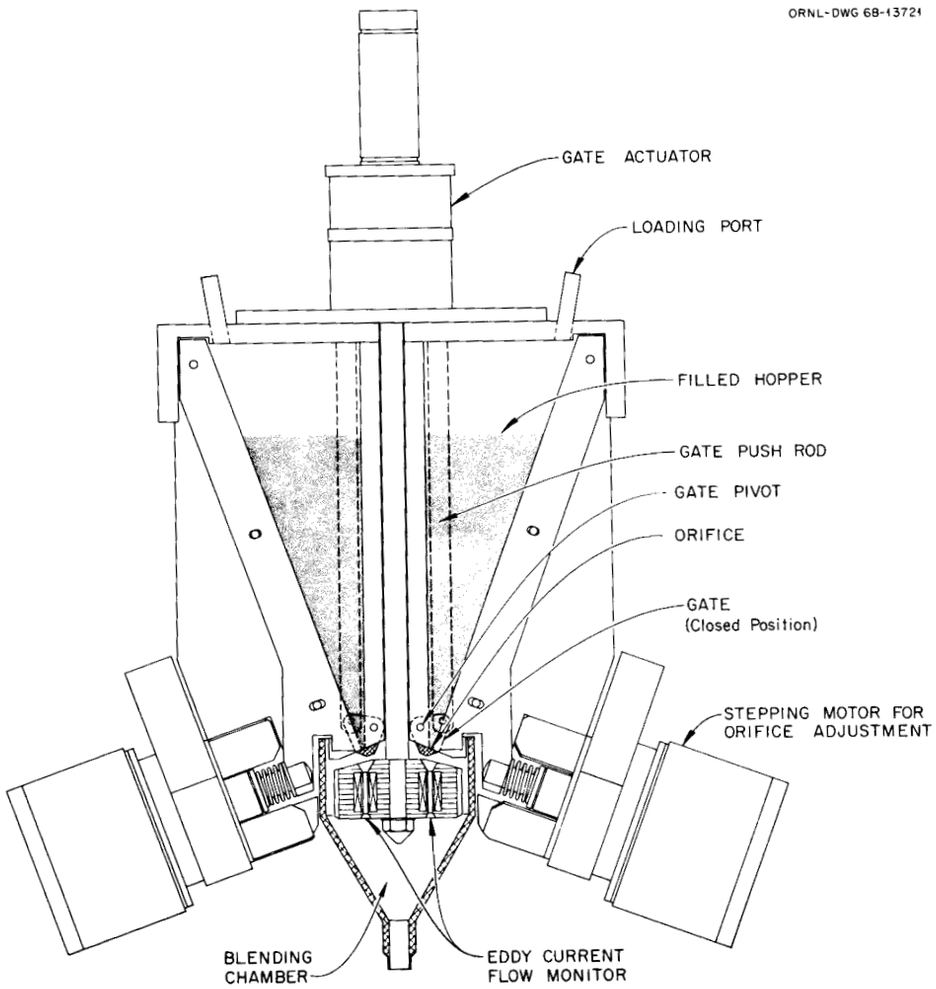

Fig. 20. Particle Loader-Blender

microscope is used. When time is of the essence, a method relying on light attenuation is employed. The light-attentuation device is calibrated by split-image techniques so the results of the two methods are comparable.

Sampling

In sampling particles for laboratory work, the common riffle is known to be the most reliable method. However, for large-scale production work a device composed of one or more riffles would quickly become too cumbersome to be useful. Hence, a Vezin sampler, which takes a small slice out of a continuous stream of particles, is used.

Split-Image Microscopy

The most accurate way we have found to size particles is to use split-image microscopy. In this method an image of the particle is split into two images, transferred through prisms, and combined to be viewed by the inspector. The positioning of the prisms determines whether the images overlap or not. A difference in the positioning of the prisms between where the two images coincide and where the two images are in juxtaposition is proportional to the diameter of the image itself. With proper calibration, the split-image microscope can measure particle diameter to an accuracy of 1 μ. The mean size and size distribution of a batch of particles can be determined with this method by measuring approximately 50 particles from a representative sample.

Light-Attenuation Sizing

Accurate sizing can be obtained by light attenuation.[9] With this method particles are passed in front of a collimated light beam that is being received by a photo detector, as shown in Fig. 21. The particle

[9]High Accuracy Products Corporation, Claremont, California.

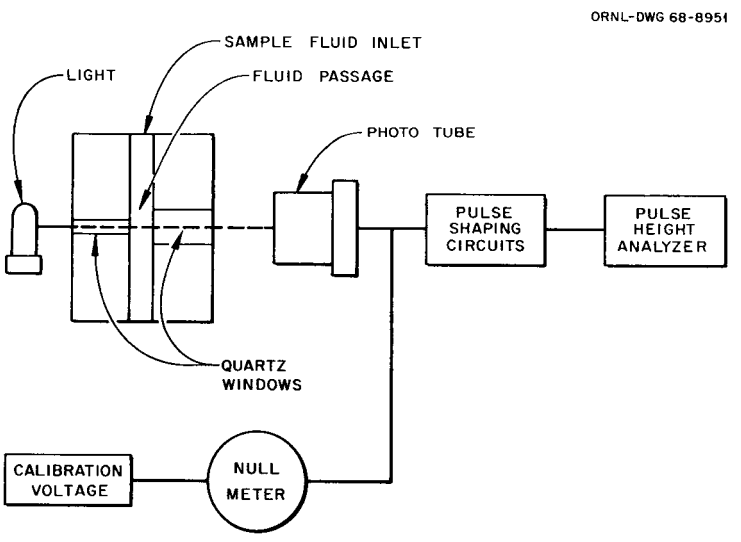

Fig. 21. Light-Attenuation Particle Size Analyzer.

passing in front of the light beam produces a dip in the photo-detector current. This dip is then fed to a pulse height analyzer and counted in ranges that have been calibrated to particle diameter. Such a device can size particles into 10-μ ranges, providing accurate determination of both mean particle size and particle size distribution.

SUMMARY

Equipment has been developed to remotely move and process kilogram quantities of particles. All the equipment can be employed in automatic process lines. Transfer techniques are flexible, so that with proper design, a process can be set up so that at any point the particles can be removed or reintroduced, permitting complete manual control in spite of the automatic nature of the equipment. Processes for sizing, eliminating nonspherical particles, and blending have been developed.

ACKNOWLEDGMENTS

The authors are indebted to A. L. Lotts for making this work possible and for his many helpful suggestions. We also wish to thank the following people for their contributions. J. A. Kaserman of the General Engineering Division designed the particle singularizer and the filler-blender. F. C. Davis and M. G. Willey, also of the General Engineering Division, designed many of the transfer devices. C. Jones, W. H. Miller, C. E. Fender, and R. A. Bowman of the Metals and Ceramics Division contributed many suggestions and long hours of tedious experimental work. H. R. Livesey of the Metals and Ceramics Division drew most of the figures for this report.

INTERNAL DISTRIBUTION

1–3. Central Research Library
4–5. ORNL – Y-12 Technical Library
Document Reference Section
6–10. Laboratory Records
11. Laboratory Records ORNL RC
12. ORNL Patent Office
13. R. E. Adams
14. G. M. Adamson, Jr.
15. L. G. Alexander
16. R. E. Blanco
17. E. S. Bomar
18. W. D. Bond
19. G. E. Boyd
20. R. A. Bradley
21. R. E. Brooksbank
22. K. B. Brown
23. F. R. Bruce
24. W. L. Carter
25. J. M. Chandler
26. S. D. Clinton
27. J. H. Coobs
28. C. M. Cox
29. F. L. Culler
30. J. E. Cunningham
31. D. E. Ferguson
32. L. M. Ferris
33. B. C. Finney
34. R. B. Fitts
35. J. H Frye, Jr.
36–39. F. J. Furman
40. H. E. Goeller
41. A. T. Gresky
42. W. R. Grimes
43. P. A. Haas
44. R. G. Haire
45. R. L. Hamner
46. W. O. Harms
47. F. E. Harrington
48. C. C. Haws, Jr.
49–51. M. R. Hill
52. A. R. Irvine
53. F. A. Kappelmann
54. P. R. Kasten
55. F. J. Kitts
56. J. M. Leitnaker
57. C. S. Lisser
58. R. E. Leuze
59. M. H. Lloyd
60. J. T. Long
61. A. L. Lotts
62. R. S. Lowrie
63. H. G. MacPherson
64. J. P. McBride
65. R. W. McClung
66. K. H. McCorkle
67. W. T. McDuffee
68–71. J. T. Meador
72. A. B. Meservey
73. J. G. Moore
74. W. L. Moore
75. L. E. Morse
76. J. P. Nichols
77. E. L. Nicholson
78. K. J. Notz
79. A. R. Olsen
80. J. R. Parrott
81. W. A. Pate
82. P. Patriarca
83. W. L. Pattison
84. W. H. Pechin
85. J. W. Prados
86. R. B. Pratt
87. J. T. Roberts
88. J. M. Robbins
89. A. D. Ryon
90. J. L. Scott
91–96. J. D. Sease
97. J. W. Snider
98. D. A. Sundberg
99. O. K. Tallent
100. E. H. Taylor
101. R. E. Thoma
102–148. D. B. Trauger
149. W. E. Unger
150. J. E. Van Cleve
151. T. N. Washburn
152. C. D. Watson
153. A. M. Weinberg
154. J. R. Weir
155. M. E. Whatley
156. R. G. Wymer

EXTERNAL DISTRIBUTION

157. A. Amorosi, Argonne National Laboratory, LMFBR Program Office
158. R. H. Ball, RDT, OSR, P. O. Box 2325, San Diego, Calif. 92112
159. R. E. Barber, AEC, Washington
160. J. A. Buckham, Manager, Chemical Technology Branch, Idaho Nuclear Corporation, P. O. Box 1845, Idaho Falls, Idaho 83401
161. J. Crawford, AEC, Washington
162. P. Clark, AEC, Washington
163. D. F. Cope, RDT, SSR, AEC, Oak Ridge Operations
164. G. W. Cunningham, AEC, Washington
165. W. Devine, Jr., Production Reactor Division, P. O. Box 550, Richland, Washington 99352
166. E. W. Dewell, Babcock & Wilcox, Lynchburg, Virginia
167–168. R. H. Graham, Gulf General Atomic, San Diego, California
169. J. S. Griffo, AEC, Washington
170. N. Haberman, RDT, AEC, Washington
171. P. G. Holstead, RDT, OSR, P. O. Box 550, Richland, Washington
172. S. Marshall, National Lead Company of Ohio
173. C. L. Matthews, RDT, OSR, AEC, Oak Ridge National Laboratory
174. T. McIntosh, AEC, Washington
175. W. H. McVey, RDT, AEC, Washington
176. R. Norman, Gulf General Atomic, San Diego, California
177. R. E. Pahler, AEC, Washington
178. C. W. Richards, AEC, Canoga Park
179. H. Schneider, AEC, Washington
180. J. M. Simmons, Division of Reactor Development and Technology, AEC, Washington
181. K. G. Steyer, Gulf General Atomic, San Diego, California
182. C. L. Storrs, HPO-AI/CE
183. C. A. Trilling, Atomics International
184. W. R. Voigt, AEC, Washington
185. F. J. Weisinberg, OSR, AEC, Oak Ridge National Laboratory
186. M. J. Whitman, AEC, Washington
187. Laboratory and University Division, AEC, ORO
188–202. Division of Technical Information Extension