CENTRAL RESEARCH LIBRARY
DOCUMENT COLLECTION

OAK RIDGE NATIONAL LABORATORY
operated by
UNION CARBIDE CORPORATION
NUCLEAR DIVISION
for the
U.S. ATOMIC ENERGY COMMISSION

MARTIN MARIETTA ENERGY SYSTEMS LIBRARIES
3 4456 0059589 9

ORNL-TM-2839
COPY NO. - 2
DATE - February 10, 1970

WALKER BRANCH WATERSHED PROJECT PROPORTIONAL WATER SAMPLER DESIGN REPORT AND OPERATING MANUAL

W. F. Johnson W. R. Miller

ABSTRACT

An automatic sampler was designed and constructed to withdraw samples of water from flowing outdoor streams. The volume of sample withdrawn is automatically in volumetric proportion to the stream flow rate. These samples are collected and combined as a large composite sample for laboratory analysis. The frequency of sampling can be adjusted manually. The sampler system will also automatically switch to a fast sampling mode such as during a storm whenever the rate of increase of the stream flow rate exceeds a preset value. In this mode the system collects individual samples in volumetric proportion to the stream flow rate in up to 250 bottles, each 250 ml capacity, at a rate of up to four individual samples per minute. These samples are not combined.

This report presents design information and operating instructions for the sampler.

OAK RIDGE NATIONAL LABORATORY
CENTRAL RESEARCH LIBRARY
DOCUMENT COLLECTION
LIBRARY LOAN COPY
DO NOT TRANSFER TO ANOTHER PERSON
If you wish someone else to see this document, send in name with document and the library will arrange a loan.

NOTICE This document contains information of a preliminary nature and was prepared primarily for internal use at the Oak Ridge National Laboratory. It is subject to revision or correction and therefore does not represent a final report.

LEGAL NOTICE

This report was prepared as an account of Government sponsored work. Neither the United States, nor the Commission, nor any person acting on behalf of the Commission:

A. Makes any warranty or representation, expressed or implied, with respect to the accuracy, completeness, or usefulness of the information contained in this report, or that the use of any information, apparatus, method, or process disclosed in this report may not infringe privately owned rights; or

B. Assumes any liabilities with respect to the use of, or for damages resulting from the use of any information, apparatus, method, or process disclosed in this report.

As used in the above, "person acting on behalf of the Commission" includes any employee or contractor of the Commission, or employee of such contractor, to the extent that such employee or contractor of the Commission, or employee of such contractor prepares, disseminates, or provides access to, any information pursuant to his employment or contract with the Commission, or his employment with such contractor.

CONTENTS

Page

1. Introduction 4

2. General Description of the Sampler 4

3. Detailed Description and Operation of Components 6
   3.1 Flow Measuring System 6
   3.2 Sample Proportioning Circuit 7
   3.3 Discharge Rate Derivative Circuit 8
   3.4 Water Pump and Flow 11
   3.5 Sample Containers 12

4. System Calibration 15
   4.1 Flow Measuring System Calibration 15
   4.2 Sample Proportioning Circuit 15
   4.3 Discharge Rate Derivative Circuit 16

MARTIN MARIETTA ENERGY SYSTEMS LIBRARIES

3 4456 0059589 9

1. INTRODUCTION

A unique water sampler was developed which draws samples of water from a flowing stream, and the volume of sample drawn is automatically in volumetric proportion to the flow rate of the stream. These samples are combined in a large carboy for laboratory analysis. The frequency of sampling can be set manually. The sampler system will also automatically switch to a fast sampling mode such as during a storm whenever the rate of increase of the stream flow rate exceeds a preset value. In this mode the system collects individual samples in volumetric proportion to the stream flow rate in up to 250 bottles, each 250 ml capacity, at a rate of up to four individual samples per minute. These samples are not combined.

This sampler was developed for the Walker Branch Watershed Project which is a study of the ecological processes that relate to the interaction between the watershed and surface waters draining from the watershed.[1] Two samplers were constructed, and they were installed on two tributaries flowing from the watershed to obtain data on dissolved and suspended loads in the streams.

This report describes the design and operation of the sampler, which has operated satisfactorily after being protected from extreme temperature fluctuations and lightning surges.

2. GENERAL DESCRIPTION OF THE SAMPLER

The sampler consists of a flow measuring device, a sample proportioning circuit, a discharge rate derivative circuit, and sample containers (Fig. 1).

The flow rate of the stream is determined by measurement of the stage height of the water as it flows over a 120° V-notch weir. This measurement is changed to a linear signal proportional to the stream discharge rate by a specially wound 10-turn potentiometer, and this signal is the input to the sample proportioning circuit and to the discharge rate derivative circuit.

The sample proportioning circuit causes samples to be drawn at adjustable, preset intervals of time by converting the signal from the potentiometer to a corresponding energization time of a solenoid-operated valve which can be opened from four times per minute to once every 100 min. The solenoid energization time can be varied to hold the valve open for about 1 sec at a stream flow rate of ~0 cfs

---

[1] J. W. Curlin and D. J. Nelson, Walker Branch Watershed Project: Objectives, Facilities, and Ecological Characteristics, ORNL-TM-2271 (1968).

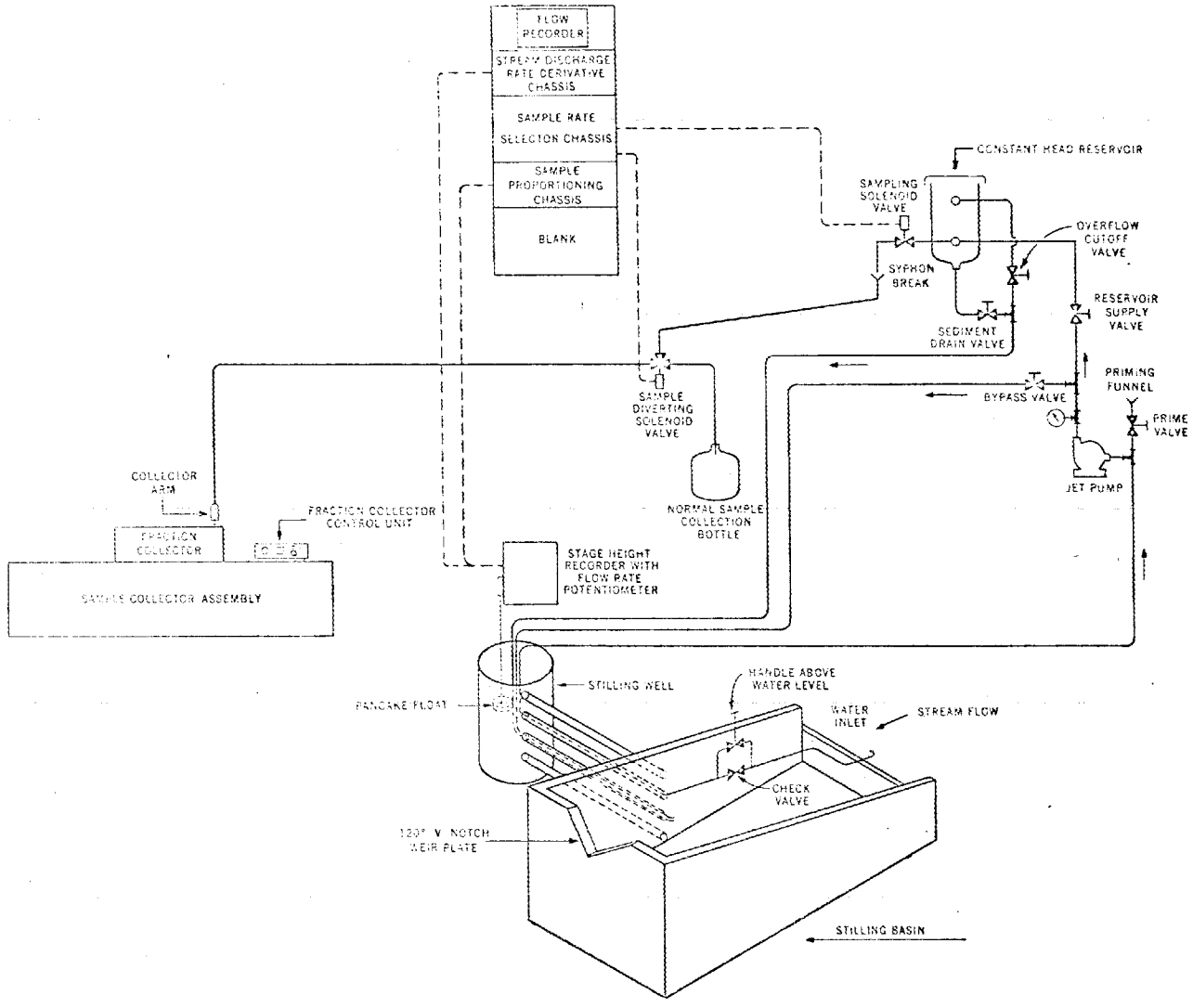

Fig. 1. Operational Diagram of Proportional Water Sampler for the Walker Branch Watershed Project.

to a maximum of 12 sec at full discharge of 41.6 cfs. The samples obtained in this manner during normal operation are collected and combined as a composite sample in a large carboy.

The discharge rate derivative circuit compares the derivative of the signal from the potentiometer with a preset value which is adjustable from 0.004 to 0.78 cfs change per 30 min. If the derivative exceeds the set point, which usually would happen during a storm, the sampling system will switch to a fast-sampling mode, and the individual samples will be collected as discrete samples vs time by a fraction collector. These discrete samples will be collected individually in small bottles.

A continuously operated jet pump whose intake is at the inlet to the stilling basin pumps water from the stream to a constant-head reservoir which overflows back into the stilling basin. A bypass line from the pump discharge to the stilling basin allows the pump to be operated near its maximum pumping capacity, which helps to keep particulate matter in suspension in the pump inlet line.

The inlet to the solenoid-operated sampling valve is connected to the pump discharge line at the point where the water enters the reservoir. Since the reservoir is open to the atmosphere at its top and the water level in the reservoir is maintained at a constant level by the overflow, the head pressure at the inlet to the valve is constant and the volume of water passing through the valve is directly proportional to the time that it is open.

3. DETAILED DESCRIPTION AND OPERATION OF COMPONENTS

The sampling system is shown in Figs. 1 through 5. A detailed set of construction prints is available; these are ORNL prints I-20031-QE-001 through -018.[2]

3.1 Flow Measuring System

A sampler was installed in each of two streams that carry water from the Walker branch watershed. The water flows through a stilling basin and over a 120° V-notch weir at each of the sampling sites. A baffle bar upstream from each weir reduces surface turbulence at high flow rates, but it also retains leaves and floating debris at low flow rates.

---

[2] Available as CAPE-1930 from the Clearing House for Federal Scientific and Technical Information, U. S. Dept. of Commerce, 5285 Port Royal Road, Springfield, Virginia 22151.

Inside an instrument building at each sampler site a stilling well is connected to the stilling basin by four tubes. The well further reduces turbulence and also contains a float for a water-level recorder. The float is connected by a stainless steel tape to a Fischer and Porter punch-tape recorder which provides a permanent record every 5 min of the water level in the weir to an accuracy of 0.001 ft.

The stream flow rate is determined by conversion of the stage-height reading to a flow-rate signal by use of an empirical formula derived for the 120° V-notch weir:

$$\text{Flow Rate (cfm)} = [\text{Stage Height (ft)}]^{2.449}.$$

A 10-turn potentiometer, wound to this equation, is driven by the stage-height recorder measuring shaft, and a constant voltage is impressed across the potentiometer. The analog signal measured between the slidewire and the counterclockwise (CCW) end of the potentiometer is directly proportional to the stream flow rate over the weir. This electrical signal, which varies from 0 to 8 v for flow rates from 0 to 41.6 cfs, is fed to the sample proportioning and discharge rate derivative circuits.

3.2 Sample Proportioning Circuit

The sample proportioning circuit (Figs. 2 and 3) converts the analog flow signal to a corresponding solenoid energization time. Amplifiers 1 and 2 in Fig. 2 generate a triangular waveform having a peak-to-peak value of 10 v and a period of 15 sec. Amplifier 3 references the minimum point of the waveform to 0 v. Potentiometer CAL 6 establishes the dc voltage impressed across the combination of the flow-rate potentiometer and potentiometer CAL 7. CAL 7 sets the zero bias for the flow rate potentiometer, and this determines the minimum sampling time that can occur at a very low flow rate. Amplifier 4, the crossing detector, compares the signal from the slidewire of the flow-rate potentiometer to the triangular wave signal from amplifier 3. Amplifier 4 is at negative saturation whenever the absolute value of the triangular wave exceeds the signal level from the flow-rate potentiometer, and it is at positive saturation for the reverse signal conditions. Thus, at 100% flow condition with a corresponding signal level of 8 v, amplifier 4 is at positive saturation for 12 of every 15 sec, while zero flow results in a positive saturation time of 0.3 sec. This positive saturation condition of amplifier 4 turns on the Sensitak relay K12, which in turn energizes relay K13. Relay contacts K13B provide the proportional contact closure time to the sample rate selector.

The sample rate selector allows the frequency of sampling to be adjusted through the range of four samples per minute to one sample every 100 min. This adjustment can be made for both the normal and fast sampling modes, and it

controls the volume of the composite sample obtained in any fixed period of time under constant stream-discharge conditions.

During normal operation the contact closures of the sample proportioning contact are counted by the normal sample counter clutch coil. When the number of contact closures of K13B equals the number set on the counter, the counter contacts C1B close. This allows the sampling solenoid valve to be energized for the duration of the closure of K13B. Relay K1 is also energized at this time, and it deenergizes the counter clutch coil and resets the counters. A similar counter, C2, performs an identical counting function in the fast sampling mode.

3.3 Discharge Rate Derivative Circuit

The discharge rate derivative circuit (Fig. 4) senses the rate at which the stream flow rate signal is increasing and compares this rate to an adjustable setpoint value. If the setpoint is exceeded, the fast sample system begins to operate. This circuit also provides a logarithmic flow signal to the flow recorder.

The incoming stream discharge signal is smoothed by the low-pass filter network of amplifier 1. The smoothed flow signal is limited by the 8.2-v Zener diode at the output of amplifier 1 to an equivalent maximum stage height of about 1 ft. This prevents the amplifiers from saturating at the higher stage heights but still allows maximum sensitivity at the lower flow rates. Amplifier 2 inverts the stream discharge signal which is fed to the differentiator circuit, amplifier 3. The output signal level from amplifier 3 is proportional to the rate at which its input signal is changing. This rate signal is then compared with an adjustable setpoint value by amplifier 4. If the absolute value of the rate signal exceeds that of the setpoint, amplifier 4 will change state and deenergize the Sensitak relay. This closes the Sensitak contacts and energizes the first time-delay relay K11. The contacts of K11 close after it has "timed out" (up to 10 min) and this energizes K12. A similar time-delay process applies to the contacts of K12. When K12A closes, it energizes K2, the fast sampling relay in the sample rate selector circuit. The long time delay between the closure of the Sensitak contacts and closure of K12 is necessary to prevent switching to the fast sampling mode due to false disturbances in the water level in the stilling well.

The fast sampling relay K2 is a delay-to-drop-out type that prevents the system from switching out of the fast sampling mode when power outages of very short duration (<5 sec) are experienced. When K2 is energized, it seals itself in through its contacts K2-A. It also energizes the fraction collector, the "time since fast sample energized" timer, and relay K3 through the sample collector contact and contacts K2-B. Relay K3, in turn, energizes counter 2 and switches the sample proportioning contact to the count coil of this counter. The solenoid on the sample diverting valve is also energized by this relay through contacts K3-C. Two pilot

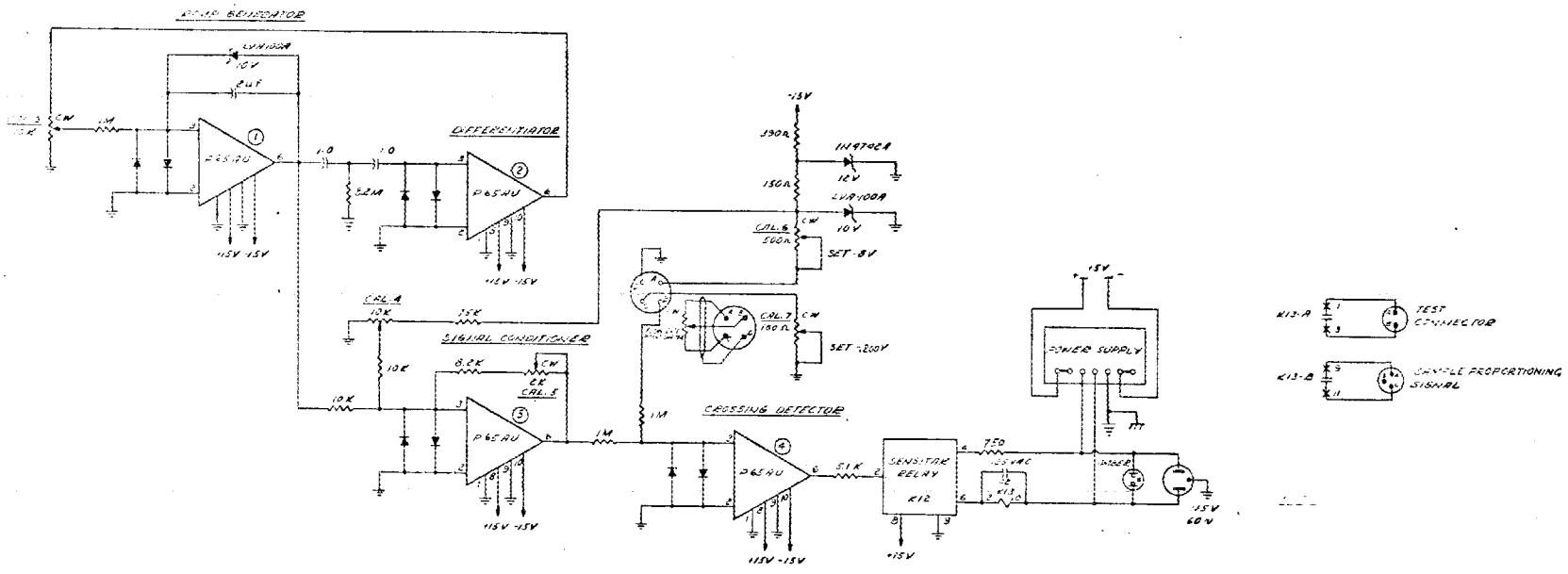

Fig. 2. Circuit for the Sample Proportioning Chassis.

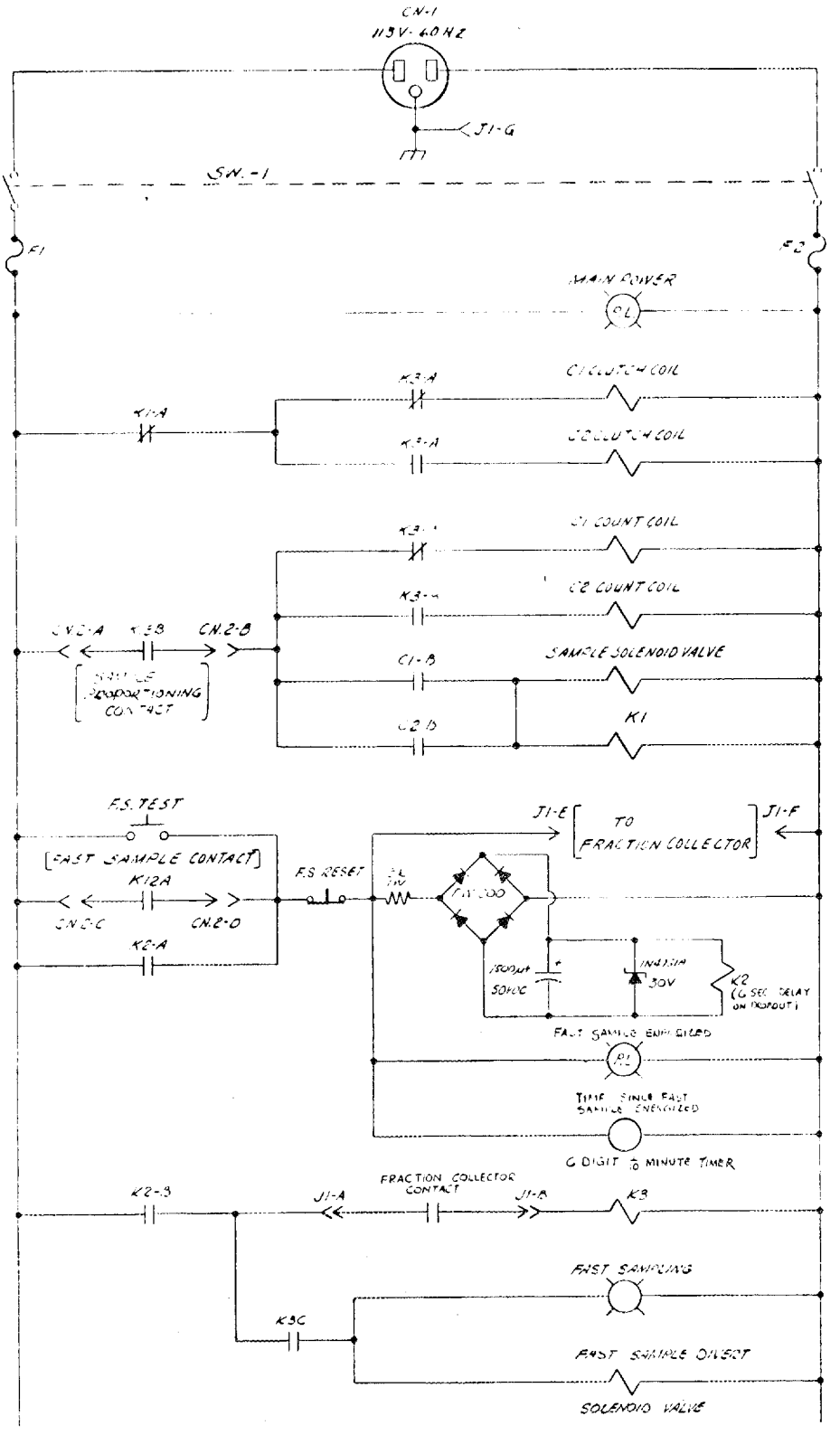

Fig. 3. Electrical Schematic Diagram for the Sample Rate Selector Chassis.

lights, one labeled "fast sample energized" and one "fast sampling," will be on at this time and will remain on until the last sample has been obtained by the fraction collector. At this time the sample collector contacts K301-A will open and deenergize relay K3, which switches the system back to counter 1. The "fast sampling" light will go out, but the "fast sample energized" light will stay on until the "fast-sample reset" button is pushed for at least 6 sec to drop out relay K2. The "time since fast sample energized" timer is also stopped at this time.

The operation of the complete fast sampling system can be checked out periodically by pushing the "fast sample test" pushbutton. The system should then be deenergized by pushing the "fast sample reset," pushbutton and all the timers should be manually reset.

Figure 5 shows the modifications that were made to the fraction collector. It also lists the switching sequence for the relays contained in the unit. The counter in the fraction collector control unit is used for setting the time (seconds) that the collector arm will remain over a sample bottle collection hole. The counter should be adjusted to a setting that gives a maximum volume of sample during the period of maximum stream flow rate without overflowing to an adjacent sample bottle. Information on the operation and servicing of the fraction collector is contained in the manufacturer's instruction manual.

The logarithmic recorder circuit formed by amplifiers 5 and 6 provides a three-decade logarithmic flow signal to the recorder over the range of 0.025 to 25 cfs. The output of amplifier 5 is a logarithmic function of its input signal, and amplifier 6 references this output at 0.025 cfs to 0 v. The span potentiometer at the output of amplifier 6 allows the maximum output signal to be adjusted to meet the needs of the flow recorder. The CAL 4 potentiometer at the input of amplifier 5 is used to suppress 0.190 of the 0.200 v impressed between the CCW terminal of the flow rate potentiometer and ground.

3.4 Water Pump and Flow

Water is drawn from the stream and pumped through the system by a jet pump. The pump inlet is at the upstream end of the stilling basin, adjacent to the downstream side of the debris wall. A check valve in the inlet line allows the pump to be primed, and a bypass valve around the check valve is available for draining the pumping system. A valve and funnel in the pump inlet line in the instrument building are used for priming the pump.

The discharge from the pump is split by a valve arrangement. These valves are adjusted so that some of the water flows to the constant-head reservoir in sufficient quantity to overflow through a drain line to the stilling basin, and the remainder flows through another line to return to the stilling basin. This latter bypass

flow rate is maintained as high as possible so that the high fluid velocity in the pump intake line will prevent settling of particulate matter in the line.

The flow of water from the pump to the reservoir passes by the inlet of the solenoid-operated sample valve just upstream from the reservoir inlet. Since the water in the reservoir is maintained at a constant level by the overflow line and its surface is at atmospheric pressure, the volume of water passed through the sample valve is directly proportional to the time that the valve is open.

Normally both valves in the reservoir overflow line and the reservoir drain line should be completely open. The reservoir supply valve should be adjusted so that the reservoir just overflows into the drain line.

The water sample passes through the sample valve and falls into a funnel which drains into a sample diverting valve. During normal operation this valve is deenergized and allows the samples to drain into a large composite-sample container. During fast sample operation, the solenoid is energized and the valve is set to allow the individual samples to flow to the fraction collector.

3.5 Sample Containers

The large container for collecting a composite sample during normal sampling periods is a 5-gal polyethylene bottle which is maintained at 32.5°F to reduce biological activity. The bottle is emptied once a week, and the normal sample counter is adjusted as required to give a reasonable amount of water during this period.

The fraction collector places the individual water samples in each of up to 250 plastic bottles (250 ml capacity each) at preset time intervals. The duration of these time intervals can be varied between 1 and 9999 sec by means of an adjustable timer in the fraction collector control unit. This timer and the fast sample counter should be adjusted to provide a nearly full sample bottle at the peak flow rate shown on the stream discharge hydrograph. The fraction collector arm is manually positioned above hole 1 in the A section during normal sampling periods, in readiness for the fast sampling mode. During fast sampling operation, the arm will move sequentially over the holes until it completes the time period for the 250th sample. At this time the arm will move from the last hole and actuate the top limit switch, which will deenergize relay K301 in the fraction collector control panel. The normally open upper contacts of K301 (pins 8 and 12) will open at this time and transfer the sample rate selector back to the normal sampling mode. The "fast sample energized" light in the sample rate selector will stay lit at this time because relay K2 will be sealed in. This relay will also prevent the system from switching back to the fast sampling mode because of subsequent closures of the fast sampling contacts before the sample rate selector has been reset.

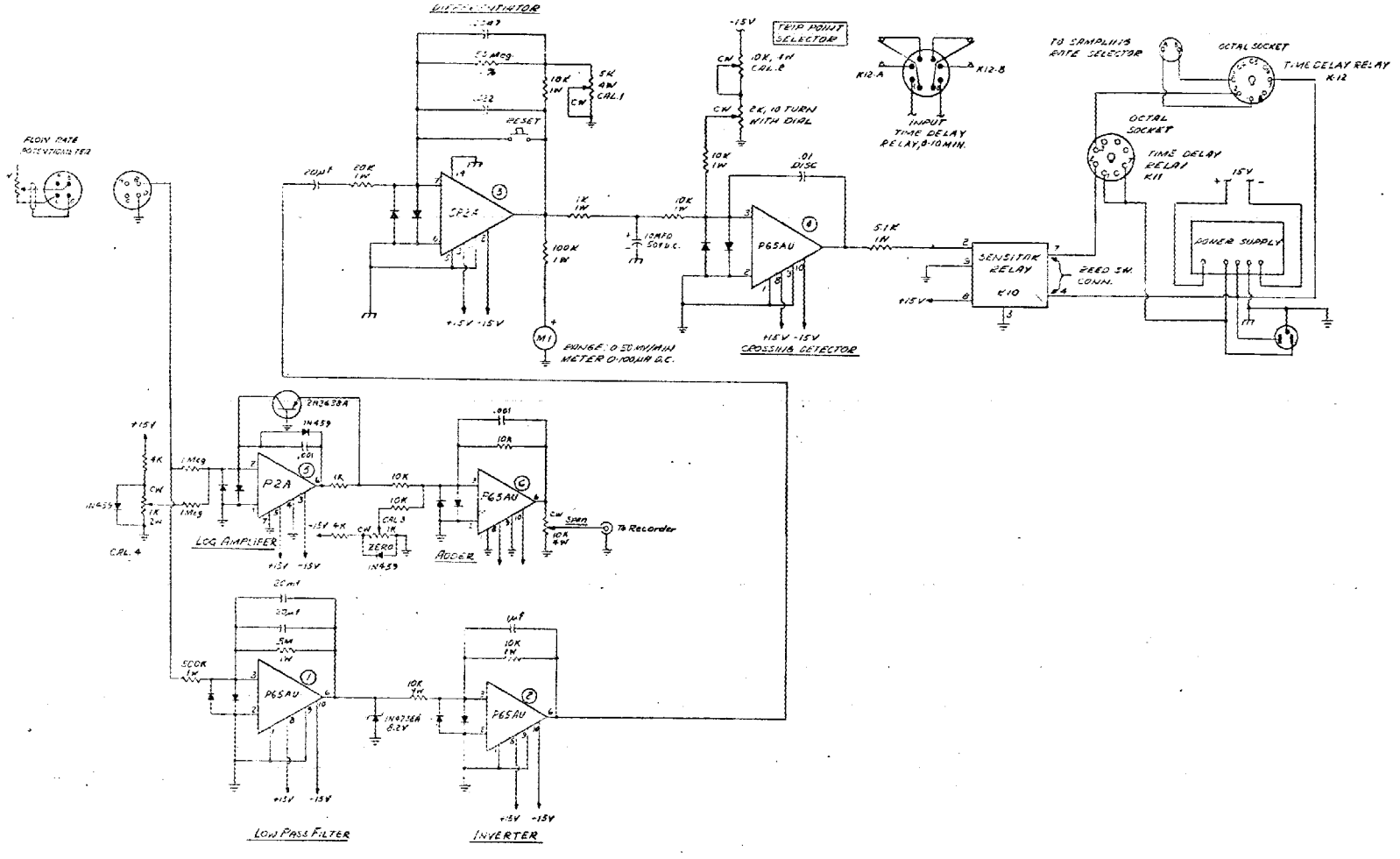

Fig. 4. Circuit for the Discharge Rate Derivative Chassis.

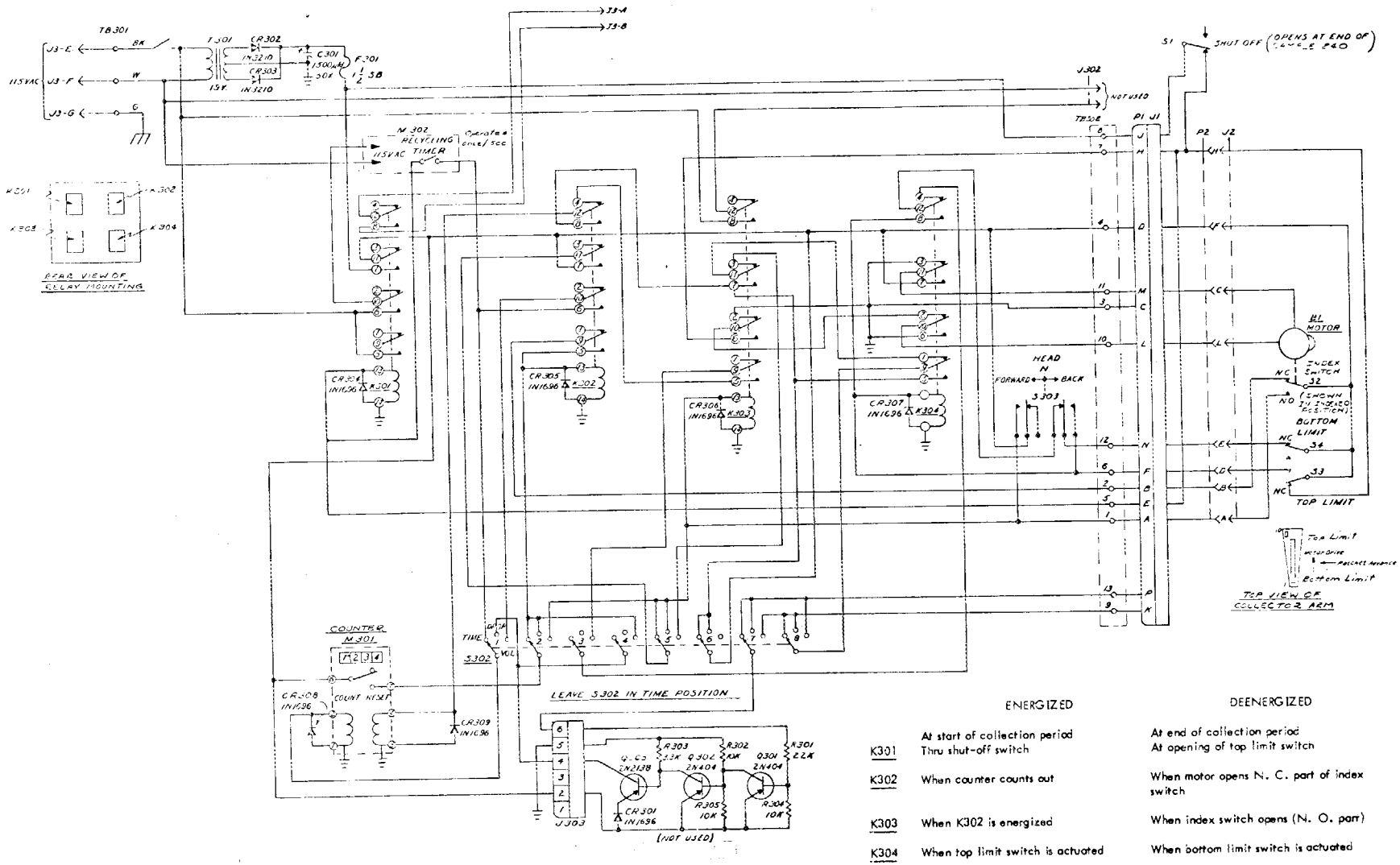

	ENERGIZED	DEENERGIZED
K301	At start of collection period Thru shut-off switch	At end of collection period At opening of top limit switch
K302	When counter counts out	When motor opens N. C. part of index switch
K303	When K302 is energized	When index switch opens (N. O. part)
K304	When top limit switch is actuated	When bottom limit switch is actuated

Fig. 5. Circuit Modifications to the Beckman, Model 132 Fraction Collector.

The operator, when servicing the sampling system, is warned by the "fast sample energized" light that the individual sample bottles need to be replaced. After the bottles have been replaced, the fraction collector arm should be set back to section A and the nozzle should be placed over the No. 1 hole in the collector block. The reset button should be pressed for about 10 sec or until the "fast sample energized" light is extinguished, and the "time since fast sample energized" timer should be reset.

4. SYSTEM CALIBRATION

4.1 Flow Measuring System Calibration

Since the plastic sprocket on the measuring shaft of the stage height recorder is not permanently attached, it can be rotated relative to the shaft. The stage height recorder should be set to indicate zero, and the sprocket should be rotated until the potentiometer slider rests against the CCW stop. The recorder should then be set to indicate the correct water depth by using the permanently mounted hook gage in the stilling basin as the depth standard.

4.2 Sample Proportioning Circuit

The sample proportioning circuit should be calibrated by the following procedure:

1. Connect the input of a digital voltmeter (DVM) to pin 6 of amplifier 1 and to ground. Adjust the CAL 3 potentiometer until the DVM indicates that the output of amplifier 1 is changing.
2. Using a stop watch, adjust CAL 3 to obtain a 15-sec period for the triangular wave generated by amplifiers 1 and 2.
3. Connect the DVM to the output of amplifier 3 and to ground. Adjust CAL 4 so that the minimum value of the triangular wave just reaches 0 v.
4. Adjust CAL 5 so that the maximum value of the wave is 10 v.
5. Recheck the triangular wave. It should rise from 0 to 10 v in 7.5 sec.
6. Substitute a standard 10-turn, 1000-ohm potentiometer for the flow rate potentiometer shown in Fig. 2.
7. Connect the DVM to the clockwise (CW) terminal of the potentiometer and to ground. Adjust CAL 6 so that the voltage from the CW terminal to ground is 8.00 v.
8. Move the positive DVM lead to the CCW terminal of the potentiometer. Adjust CAL 7 so that the voltage between the CCW terminal and ground is 0.222 v.
9. Repeat steps 7 and 8.
10. Connect the positive DVM lead to the slider of the potentiometer, and adjust the potentiometer setting until the DVM indicates 4 v.

11. Connect a volt-ohmmeter that is set on R x 1 to the A and C pins of the sample proportioning signal connector. The meter should indicate that the K13B contacts are closed for 6 of the 15 sec.

4.3 Discharge Rate Derivative Circuit

1. Into pins B and D of the input connector, feed a ramp signal that is increasing 5 mv/min. The signal should start at nearly 0 v, and should be permitted to increase for 30 min before any adjustments are made to the circuit, allowing the low-pass filter and differentiator to stabilize.
2. Adjust potentiometer CAL 1 so that the output of amplifier 3 is exactly 10 v.
3. Adjust potentiometer CAL 2 so that 10 v is impressed across the trip point selector potentiometer.
4. Remove the ramp signal from the input connector, and reconnect the circuit to the stage height recorder and sample proportioning chassis.
5. Loosen the slip clutch on the stage height recorder until the flow rate potentiometer turns freely. Turn the potentiometer until the signal measured between the slider and the CCW end is 4.8 mv.
6. Adjust potentiometer CAL 3 until the output of amplifier 6 is 0 v.
7. Turn the flow rate potentiometer until the voltage between the slider and CCW terminal is 4.8 v.
8. Adjust the span potentiometer until its output is 100 mv.
9. Repeat steps 6 and 8.
10. Calibrate the stage height recorder according to the procedure given in Sect. 4.1.

INTERNAL DISTRIBUTION

1. Biology Library
2-4. Central Research Library
5. Laboratory Shift Supervisor
6-7. ORNL - Y12 Technical Library Document Reference Section
8-41. Laboratory Records Department
42. Laboratory Records, ORNL R.C.
43. H. H. Abee
44. C. H. Abner
45. R. K. Adams
46-95. S. I. Auerbach
96. J. A. Auxier
97. B. G. Blaylock
98. W. P. Bonner
99. W. J. Boegley, Jr.
100. C. J. Borkowski
101. G. E. Boyd
102. F. R. Bruce
103. C. C. Burwell
104. K. E. Cowser
105. F. L. Culler, Jr.
106-155. J. W. Curlin
156. R. C. Dahlman
157. W. DeLaguna
158. P. B. Dunaway
159. C. Francis
160. D. A. Gardiner
161. T. M. Gayle
162. D. F. Grigal
163. T. Grizzard
164. R. P. Hammond
165. C. S. Harrill
166. P. W. Hill
167. D. G. Jacobs
168. W. F. Johnson
169. S. V. Kaye
170. M. A. Kastenbaum
171. B. Lieberman
172-173. H. G. Linginfelter
174. C. S. Lisser
175. J. L. Liverman
176. T. F. Lomenick
177. H. G. MacPherson
178. W. C. McClain
179. W. R. Miller
180. K. Z. Morgan
181. C. A. Mossman
182-231. D. J. Nelson
232. J. S. Olson
233. R. V. O'Neill
234. D. E. Reichle
235. G. S. Sadowski
236. A. F. Shinn
237. M. J. Skinner
238. W. S. Snyder
239. E. G. Struxness
240. T. Tamura
241. F. G. Taylor, Jr.
242. L. H. Thacker
243. W. A. Thomas
244. G. V. Ulrickson
245. V.R.R. Uppuluri
246. F. C. Von der Lage
247. A. M. Weinberg
248. J. P. Witherspoon
249. M. Witkamp
250. Gale Young
251. J. E. Cantlon (consultant)
252. J. C. Frye (consultant)
253. E. Gerjuoy (consultant)
254. J. B. Hursh (consultant)
255. H. O. Wycoff (consultant

EXTERNAL DISTRIBUTION

256. J. N. Wolfe, Environmental Sciences Branch, Division of Biology and Medicine, USAEC, Washington, D. C. 20545
257. J. J. Davis, AEC, P. O. Box 14100, Las Vegas, Nevada 89114
258. R. F. Reitemeier, Environmental Sciences Branch, Division of Biology and Medicine, USAEC, Washington, D. C. 20545
259. W. S. Osburn, Environmental Sciences Branch, Division of Biology and Medicine, USAEC, Washington, D. C. 20545
260. C. L. Osterberg, Environmental Sciences Branch, Division of Biology and Medicine, USAEC, Washington, D. C. 20545
261. Jeff Swinebroad, Environmental Sciences Branch, Division of Biology and Medicine, USAEC, Washington, D. C. 20545
262. C. S. Shoup, Biology Branch, Oak Ridge Operations, USAEC, Oak Ridge, Tennessee 37830
263. Paul Krueger, Dept. of Civil Engineering, School of Engineering, Stanford University, Stanford, California 94305
264. D. W. Goodall, Ecology Center, College of Natural Resources, Utah State University, Logan, Utah 84321
265. S. P. Gessel, School of Forestry, University of Washington, Seattle, Washington 98105
266. Harve Carlson, Director, Division of Biological and Medical Research, National Science Foundation, Washington, D. C.
267. LaMont C. Cole, Langmuir Laboratory, Cornell University, Ithaca, New York 14850
268. R. H. Whittaker, Dept. of Population Biology, University of California, Irvine, California
269. Charles Cooper, Dept. of Conservation, School of Natural Resources, University of Michigan, Ann Arbor, Michigan 48104
270. David Gates, Missouri Botanical Gardens, St. Louis, Missouri 63110
271. N. S. Hall, Agricultural Laboratory, University of Tennessee, AEC, Oak Ridge, Tennessee 37830
272. C. H. Shelton, Dept. of Agricultural Engineering, University of Tennessee, Knoxville, Tennessee 37916
273. L. F. Seatz, Dept. of Agronomy, University of Tennessee, Knoxville, Tennessee 37916
274. J. D. Hewlett, School of Forestry, University of Georgia, Athens, Georgia 30601
275. W. M. Snyder, Agricultural Research Service, P. O. Box 469, Athens, Georgia 30601
276. L. B. Leopold, U. S. Geological Survey, Washington, D. C. 20242
277. Nicholas Clesceri, Bio-Environmental Engineering Division, Rensselaer Polytechnic Institute, Troy, New York 12181
278. Gene E. Likens, Cornell University, Ithaca, New York 14850

279. Philip L. Johnson, School of Forestry, University of Georgia, Athens, Georgia 30601
280. Jerry Kline, Argonne National Laboratory, Argonne, Illinois 60439
281. G. M. Van Dyne, Natural Resources Ecology Laboratory, Colorado State University, Fort Collins, Colorado 80521
282. F. C. Evans, Dept of Zoology, University of Michigan, Ann Arbor, Michigan 48104
283. David G. Frey, Dept. of Zoology, Indiana University, Bloomington, Indiana 47401
284. Robert H. Giles, Jr., Dept. of Forestry and Wildlife, Virginia Polytechnic Institute, Blacksburg, Virginia 24601
285. Karl F. Wenger, Branch Chief for Silvaculture, Division of Timber Management Res., USDA, Forest Service, Washington, D. C. 20250
286. Robert Ball, Dept. of Fisheries, Michigan State University, East Lansing, Michigan 48823
287. Robert J. Beyers, Savannah River Ecology Laboratory, University of Georgia, Athens, Georgia 30601
288. Byron O. Blair, Agronomy Dept., Life Sciences Building, Purdue University, West Lafayette, Indiana 47907
289. F. H. Bormann, School of Forestry, Yale University, New Haven, Connecticut 06511
290. John Cantlon, Dept. of Botany, Michigan State University, East Lansing, Michigan 48823
291. William Cooper, Dept. of Zoology, Michigan State University, East Lansing, Michigan 48823
292. Troy C. Dorris, Aquatic Biology Laboratory, Oklahoma State University, Stillwater, Oklahoma 74074
293. Robert B. Platt, Dept. of Biology, Emory University, Atlanta, Georgia 30322
294. William Reiners, Dept. of Biological Sciences, Dartmouth College, Hanover, New Hampshire 03755
295. George M. Woodwell, Dept. of Biology, Brookhaven National Laboratory, Upton, New York 11973
296. Frank F. Hooper, School of Natural Resources, University of Michigan, Ann Arbor, Michigan 48104
297. G. W. Saunders, Dept. of Zoology, University of Michigan, Ann Arbor, Michigan 48104
298. George M. Jemison, Deputy Chief, U. S. Forest Service, Washington, D. C. 20250
299. Leonard Leyton, Section Leader I.U.F.R.O. Commonwealth Forestry Institute, University of Oxford, South Parks Road, Oxford, England
300. Robert E. Dils, College of Forestry and Natural Resources, Colorado State University, Fort Collins, Colorado 80521
301. William D. Striffler, College of Forestry and Natural Resources, Colorado State University, Fort Collins, Colorado 80521

302. David M. Moehring, Dept. of Forestry and Range Management, Texas A and M University, College Station, Texas 77843
303. Thomas C. Nelson, Director, Southern Forest Experiment Station, U. S. Forest Service, New Orleans, Louisiana 70113
304. Richard D. Lane, Director, Northeastern Forest Experiment Station, U. S. Forest Service, Upper Darby, Pennsylvania
305. M. H. Drinkwater, Canada Dept. of Forestry, Calgary, Alberta, Canada
306. James E. Douglass, Coweeta Hydrologic Laboratory, U. S. Forest Service, Dillard, Georgia 30537
307. W. R. Boggess, Dept. of Forestry, University of Illinois, Urbana, Illinois 61801
308. H. C. Storey, Division of Watershed, Recreation and Range Research, U. S. Forest Service, Washington, D. C. 20250
309. W. M. Zillgitt, Director, Southeastern Forest Experiment Station, Asheville, North Carolina
310. Kenneth D. Carlander, Dept. of Zoology and Entomology, Iowa State University, Ames, Iowa 50010
311. Robert S. Campbell, Dept. of Zoology, University of Missouri, Columbia, Missouri 65201
312. Keith V. Slack, U. S. Geological Survey, 345 Middlefield Road, Menlo Park, California 94025
313. George Sprugel, Jr., Illinois Natural History Survey, Urbana, Illinois 61801
314. C. H. Stoltenberg, School of Forestry, Oregon State University, Corvallis, Oregon 97330
315. K. R. Knoerr, School of Forestry, Duke University, Durham, North Carolina 27706
316. R. A. Elder, TVA Engineering Laboratory, Norris, Tennessee 37828
317. D. W. Cole, College of Forest Resources, Washington University, Seattle, Washington 98105
318. D. D. Wooldridge, College of Forest Resources, University of Washington, Seattle, Washington 98105
319. K. J. Seigworth, Division of Forestry Development, Norris, Tennessee
320. R. Betson, Hydraulic Data Branch, TVA, Knoxville, Tennessee 37916
321. M. A. Churchill, Environmental Hygiene Branch, TVA, Chattanooga, Tennessee
322. W. E. Sopper, School of Forestry, Pennsylvania State University, University Park, Pennsylvania 16802
323. B. J. Frederick, U. S. Geological Survey, Knoxville, Tennessee 37902
324. F. A. Gifford, Atmospheric and Turbulence Laboratory, Oak Ridge, Tennessee
325. P. A. Briegleb, Director, Pacific Northwest Forest and Range Experiment Station, P. O. Box 3141, Portland, Oregon 97208
326. R. D. McCulley, Director, Pacific Southwest Forest and Range Experiment Station, P. O. Box 245, Berkeley, California 94701
327. C. F. Becker, Agricultural Engineering Section, University of Wyoming, Laramie, Wyoming 82070

328. W. L. Decker, Dept. of Atmospheric Science, College of Agriculture, University of Missouri, Columbia, Missouri 65201
329. A. D. Hasler, Laboratory of Limnology, University of Wisconsin, Madison, Wisconsin 53706
330. D. M. Hopkins, Office of Marine Geology and Hydrology, U. S. Geological Survey, 4 Homewood Place, Menlo Park, California 94205
331. B. H. Ketchum, Environmental Biology Program, National Science Foundation, 1800 G Street, N. W., Washington, D. C. 20550
332. P. H. Carrigan, Water Resources Division, U. S. Geological Survey, Washington, D. C. 20242

333 - 347. DTIE, OR

348. Laboratory and University Division