94

ORNL-NSIC-68

Contract No. W-7405-eng-26

Nuclear Safety Information Center

CASK DESIGNERS GUIDE

A Guide for the Design, Fabrication, and Operation of Shipping Casks for Nuclear Applications

L. B. Shappert

J. N. Baird
S. Bernstein
H. C. Claiborne
W. C. Corder
G. E. Edison
J. H. Evans
O. A. Kelly
B. B. Klima
E. C. Lusk
J. R. McGuffey
H. A. Nelms
A. M. Perry
J. N. Robinson
J. D. Rollins
R. W. Schneider
A. W. Serkiz
L. R. Shobe
M. Solomito
A. E. Spaller
W. C. Stoddart
D. C. Watkin

FEBRUARY 1970

OAK RIDGE NATIONAL LABORATORY LIBRARY
3 4456 0022902 7

OAK RIDGE NATIONAL LABORATORY
Oak Ridge, Tennessee
operated by
UNION CARBIDE CORPORATION
for the
U.S. ATOMIC ENERGY COMMISSION

Printed in the United States of America. Available from Clearinghouse for Federal
Scientific and Technical Information, National Bureau of Standards,
U.S. Department of Commerce, Springfield, Virginia 22151
Price: Printed Copy $3.00; Microfiche $0.65

LEGAL NOTICE

This report was prepared as an account of Government sponsored work. Neither the United States, nor the Commission, nor any person acting on behalf of the Commission:

A. Makes any warranty or representation, expressed or implied, with respect to the accuracy, completeness, or usefulness of the information contained in this report, or that the use of any information, apparatus, method, or process disclosed in this report may not infringe privately owned rights; or

B. Assumes any liabilities with respect to the use of, or for damages resulting from the use of any information, apparatus, method, or process disclosed in this report.

As used in the above, "person acting on behalf of the Commission" includes any employee or contractor of the Commission, or employee of such contractor, to the extent that such employee or contractor of the Commission, or employee of such contractor prepares, disseminates, or provides access to, any information pursuant to his employment or contract with the Commission, or his employment with such contractor.

FOREWORD

This report, produced under the aegis of the USAEC Division of Reactor Development and Technology, is intended to contain all the information a cask designer needs to ensure that his cask meets the performance specifications required by the appropriate Federal regulations of the Department of Transportation and the Atomic Energy Commission (see Chapter 1). Therefore, both cask designers and reviewers should find much of this information useful in their respective jobs.

While it is not possible to provide an absolute level of safety in all aspects of cask design, the authors did strive for consistency and for adherence to both the requirements and intent of the Federal regulations. In compiling the information, the authors not only made extensive use of the available literature on the subject but also had under their direction a research and development program that was established to provide additional technical information. Among the areas investigated in this program, both at ORNL and elsewhere, were shielding, materials of construction, fabrication, criticality, and heat transfer under both normal and accident conditions.

Some of the data presented here have been taken from experimental programs that are not yet completed; in these cases, the information is identified as preliminary. However, because future revisions of this document are uncertain, it was felt best to provide the reader with a knowledge of the existence of the programs, as well as a preliminary indication of their results.

A draft of this volume, ORNL-TM-2410, "Irradiated Fuel Shipping Cask Design Guide," was issued in January 1969 and sent to more than 500 people involved in various aspects of packaging and transportation of radioactive material. Comments and suggestions, solicited from the readers, formed the basis for many of the changes that have been incorporated in this volume.

Wm. B. Cottrell, Director
Nuclear Safety Information Center

PREFACE

The Nuclear Safety Information Center was established in March 1963 at the Oak Ridge National Laboratory under the sponsorship of the U.S. Atomic Energy Commission to serve as a focal point for the collection, storage, evaluation, and dissemination of nuclear safety information. A system of keywords is used to index the information cataloged by the Center. The title, author, installation, abstract, and keywords for each document reviewed is recorded on magnetic tape at the central computer facility in Oak Ridge. The references are cataloged according to the following categories:

1. General Safety Criteria
2. Siting of Nuclear Facilities
3. Transportation and Handling of Radioactive Materials
4. Aerospace Safety
5. Accident Analysis
6. Reactor Transients, Kinetics, and Stability
7. Fission Product Release, Transport, and Removal
8. Sources of Energy Release Under Accident Conditions
9. Nuclear Instrumentation, Control, and Safety Systems
10. Electrical Power Systems
11. Containment of Nuclear Facilities
12. Plant Safety Features
13. Radiochemical Plant Safety
14. Radionuclide Release and Movement in the Environment
15. Environmental Surveys, Monitoring and Radiation Exposure of Man
16. Meteorological Considerations
17. Operational Safety and Experience
18. Safety Analysis and Design Reports
19. Bibliographies

Computer programs have been developed which enable NSIC to (1) produce a quarterly indexed bibliography of its accessions (issued with ORNL-NSIC report numbers), (2) operate a routine program of Selective Dissemination of Information (SDI) to individuals according to their particular profile of interest, and (3) make retrospective searches of the references on the tapes.

Other services of the Center include principally (1) preparation of state-of-the-art reports (issued with ORNL-NSIC report numbers), (2) preparation of the quarterly technical progress review, Nuclear Safety,

(3) answering technical inquiries as time is available, and (4) counsel and guidance on nuclear safety problems.

Services of the NSIC are available without charge to government agencies, research and educational institutions, and the nuclear industry. Under no circumstances do these services include furnishing copies of any documents (except NSIC reports), although all documents may be examined at the Center by qualified personnel. Inquiries concerning the capabilities and operation of the Center may be addressed to

J. R. Buchanan, Assistant Director
(Phone 615-483-8611, Ext. 3-7253)
Nuclear Safety Information Center
Oak Ridge National Laboratory
Post Office Box Y
Oak Ridge, Tennessee 37830

Acknowledgments

The Guide represents the efforts of a large number of people; although some of these have worked on more than one chapter, their names are listed for the chapter with which they are primarily concerned.

Chapter 2: W. C. Stoddart, H. A. Nelms, J. H. Evans, A. E. Spaller,* D. C. Watkin (ORNL), and L. R. Shobe (University of Tennessee).

Chapter 3: O. A. Kelly (ORNL)

Chapter 4: J. R. McGuffey, R. W. Schneider,** J. N. Robinson (ORNL)

Chapter 5: W. C. Corder, J. D. Rollins, E. C. Lusk, A. W. Serkiz (Battelle Memorial Institute, Columbus, Ohio)

Chapter 6: G. E. Edison,*** A. M. Perry (ORNL)

Chapter 7: M. Solomito, H. C. Claiborne (ORNL)

Chapter 8: S. Bernstein (UCC, Paducah, Kentucky)

Organization: B. B. Klima, J. N. Baird (ORNL)

Probably the most comprehensive comments on ORNL-TM-2410 came from the American National Standards Institute (ANSI) Committee N14-2.2. In addition, particular note should be made of the several nomographs (in Chap. 7) that were contributed by J. W. Langhaar (Du Pont). Also, B. A. Karrasch (Babcock and Wilcox) originally drafted Sect. 5.4.2 on fuel pin failure temperature. Another significant section, 1.5, was developed by R. D. Seagren (ORNL).

---

*Present address, Tennessee Eastman, Kingsport, Tenn.

**Present address: Bonney Forge, Allentown, Pa.

***Present address: Westinghouse, Pittsburgh, Pa.

CONTENTS

Page

Abstract xiii

Acknowledgments vi

1. Introduction 1

1.1 Scope 6
1.2 Cask Nomenclature 6
1.3 Quality Assurance 6
1.4 Reports 8
1.5 Cask Approvals 8

1.5.1 General 8
1.5.2 Type of Packages 9
1.5.3 Exemptions from Specification Packaging, Marking, and Labeling 12
1.5.4 Isotope Package Limits 13
1.5.5 Fissile Materials 14

1.6 References 15

2. Structural Design 16

2.1 Inner Shell Thickness 16
2.2 Outer Shell Thickness 16

2.2.1 Basis for Equation (2.1) 19

2.3 Weld Design 21

2.4 Cask Closure, Gasketing, and Bolting Design 27

2.4.1 Selection and Design of the Gasket 27
2.4.2 Design for Bolts or Studs to Retain Cask Lid 35
2.4.3 Cask Closure Design 39

2.5 Lifting Devices 43

2.6 Tie-Downs 48

2.6.1 General Considerations 48

Page

2.6.2 Tie-Down Methods 51
2.6.3 Methods of Analysis 55

2.7 Effects of a 30-ft Impact on Lead Shielding 55

2.7.1 Material Properties Under Impact Conditions 56
2.7.2 Analysis of a Horizontal-Axis Impact of a Cylindrical Cask Without Fins 58
2.7.3 Analysis of an End Impact of a Cylindrical Cask Having Nonbuffered Ends 63

2.8 Shock Absorbing Structures 64

2.8.1 Fins 65
2.8.2 Toroidal Shell-Type Energy Absorbers 66
2.8.3 Protective Buffers 68
2.8.4 Characteristics of Aluminum Honeycomb 72
2.8.5 The Army-AEC Vehicle Impact Studies 75

2.9 Testing Requirements 76

2.9.1 Hypothetical Accident Conditions 77
2.9.2 Normal Operating Conditions 79

2.10 Comments on Cask Shielding Material 81

2.10.1 Heat Transfer Under Normal Conditions 83
2.10.2 Heat Transfer Under Accident Conditions 85

2.11 Fuel Magazine Design 87

2.11.1 Protection and Containment of Fuel During Transportation and Handling 87
2.11.2 Dissipation of Heat 88
2.11.3 Control of Criticality 88

2.12 Simple Beam Requirement 92

2.13 References 94

Page

3. Materials 98

3.1 Plate 99
3.2 Pipes and Tubes 99
3.3 Forgings, Fittings, and Bolting 100
3.4 Welding Electrodes, Rods, and Wire 101
3.5 Special Materials 101
3.6 Identification Marking and Purchase Order Requirements 102

4. Fabrication 103

4.1 Materials 105

4.1.1 Mill Test Reports and Marking 105
4.1.2 Cutting Material 105
4.1.3 Repair of Defects in Materials 106
4.1.4 Forming Materials 106

4.2 Identification and Control of Materials 106

4.3 Welding 107

4.3.1 Welding Processes and Filler Metals 107
4.3.2 Qualification of Welding Procedures 108
4.3.3 Qualification of Welders and Welding Operators 109
4.3.4 Lowest Permissible Temperatures for Welding 109
4.3.5 Fitting and Alignment 109
4.3.6 Cleaning of Surfaces to Be Welded 109
4.3.7 Joints - Alignment Tolerances 110
4.3.8 Finished Joints 110
4.3.9 Miscellaneous Welding Requirements 110
4.3.10 Repair of Weld Defects 111

4.4 Weld-Metal Cladding of Carbon Steel 111

4.4.1 Welding Procedure Qualification Requirements 111
4.4.2 Performance Qualification Test 114

4.5 Joining Integrally Clad or Weld-Metal-Overlay Clad Material 114

Page

4.6 Postweld Heat Treatment 114

4.7 Lead Pouring 115

4.8 Inspection 115

4.8.1 Access for Inspector 115
4.8.2 Inspection of Material 115
4.8.3 Inspection of Surfaces During Fabrication 116
4.8.4 Dimensional Inspection 116
4.8.5 Weld Inspection 117
4.8.6 Check of Postweld Heat-Treatment Practice 117
4.8.7 Inspection During Fabrication 118

4.9 Testing 118

4.9.1 Shielding Chamber Leak Test 118
4.9.2 Pressure Test 118
4.9.3 Leak Test 119
4.9.4 Heat-Transfer Acceptance Test 119
4.9.5 Shielding Integrity Test 120

4.10 Fabrication Record 121

5. Heat Transfer 123

5.1 Introduction 123
5.2 Heat Sources 125

5.2.1 Decay Heat Load 125
5.2.2 Solar Heat Load 129

5.3 External Heat Transfer 132

5.3.1 Heat Removal from a Cask Surface 134

5.4 Internal Heat Transfer 145

5.4.1 Calculation of Fuel Rod Temperature 148
5.4.2 Fuel Rod Failure Temperatures 149

5.5 Fire Analysis 160

Page

5.5.1 Graphical Method 161
5.5.2 Analog Method 165
5.5.3 Energy Balance Method 165
5.5.4 Use of Digital Computers in Studying the Thermal Transient Caused by a Fire 181

5.6 References 183

6. Criticality 187

6.1 Introduction 187
6.2 Methods of Prevention of Criticality 187

6.2.1 Application 188

6.3 Normal Conditions of Transport 190

6.3.1 The Fresh Fuel Assimption 191
6.3.2 Burnup Effects on Reactivity 192

6.4 The Most Reactive Credible Condition of Transport 194

6.5 Criticality Evidence 195

6.5.1 Safe Limits 196
6.5.2 Calculational Evidence 197
6.5.3 Experimental Evidence 200

6.6 References 203

6.7 Bibliography of Critical Experiments 206

7. Shielding 217

7.1 General Considerations 217
7.2 DOT Regulations 217
7.3 Shielding Estimates 218

7.3.1 Comparison of Nomograph and Machine Code 220

7.4 Calculation of External Dose Rates - Open Vehicle 220

7.5 Effect of Using Steel for the Outer Shell on the External Dose Rate 222

Page

7.6 Calculation of External Dose Rates - Closed Vehicle 222
7.7 Example 225
7.8 References 226

8. Uranium-Shielded Casks 227

8.1 General Considerations 227
8.2 Properties of Uranium 228
8.3 Technological Factors 228

8.3.1 Thermal Expansion 228
8.3.2 Thermal Cycling Growth 229
8.3.3 Formation of Uranium-Iron Alloy in a Fire 230
8.3.4 Chemical Activity 230
8.3.5 Uranium Alloys 231

8.4 Design Considerations 231

8.5 Fabrication 232

8.5.1 Uranium Welding 233

8.6 Testing of a Prototype Uranium-Shielded Cask 234

8.7 Examples of Uranium Shielded Casks 235

8.8 References 237

ABSTRACT

The design of irradiated fuel shipping casks is governed by regulations (AEC Manual, Chapter 0529, 10CFR71 and 49CFR171-178) that impose structural performance standards on the cask by a series of postulated accidents. This Guide is intended to provide cask design procedures and criteria, developed from extensive analysis and testing programs, that enable the designer to correlate the cask design with the performance of the cask as reliably as if the cask were subjected to a physical demonstration.

The Guide covers design areas of cask structural integrity, heat transfer, criticality, shielding materials of construction, and fabrication techniques. This information is discussed within the framework of the AEC regulations, along with the rationale and the testing program that supported its development.

It has been possible to provide design information in the important areas referred to in the current regulations. However, the regulations are constantly undergoing modification and often reinterpretation. Test programs and actual operating experience will continue to be useful in refining presently available data and modifying analyses discussed in this Guide.

CASK DESIGNERS GUIDE

L. B. Shappert

1. INTRODUCTION

The domestic transportation of spent fuel elements from power reactors is governed by regulations from the Department of Transportation (DOT) and the U.S. Atomic Energy Commission. The Hazardous Materials Regulations Board of the DOT has recently revised these regulations, making them more general and eliminating much of the detail.[1] The primary aim of the regulations is, of course, to protect the public by rigorously restricting the amount of radiation and contamination to which people are exposed.

The regulations referred to throughout this Guide are primarily those of the USAEC[2] (referred to as AECM 0529 which are almost identical to those published as CFR Title 10 part 71), but occasionally the DOT regulations are mentioned; all are similar and, in general, compatible.

The regulations are written in terms of performance specification requirements. A cask designer is free to exercise his own judgment as to, first, how to meet these requirements and, second, how to prove that he has done so. Difficulties can arise because various cask designers place their own (possibly incorrect) interpretation on the regulations and may develop new methods of structural assessment. In the past, no document has been available which has attempted to correlate tests with an analytical treatment or provide analysis methods that have withstood the test of time.

In 1966 the Division of Reactor Development and Technology (RDT) requested of the Oak Ridge National Laboratory that they develop a Guide good engineering standards of practice in the design, fabrication, testing, inspection, and maintenance of irradiated fuel shipping casks. It was decided that, initially, the information in the Guide should apply to lead-shielded spent fuel casks having steel inner and outer shells since this type of cask is most widely used in the United States today;

then, subsequently, it was to be expanded to include other appropriate shielding materials. The Guide was to be of such quality that proof of adherence to it would constitute prima facie evidence of satisfying the performance standards of the Federal regulations. In addition, the Guide was to provide detailed engineering data to support its provisions, with justifications, derivations, and judgments, if necessary, to clarify the degree of safety and degree of conservatism intended by the Guide. This would create a framework against which alternative approaches, techniques, or materials could be judged to ensure that the degree of conservatism is consistent and to provide a means for encouraging improvement in the art and its incorporation into practice. This Guide constitutes the Laboratory's effort in fulfilling that commitment.

A preliminary draft of this report[5] was widely disseminated; readers were asked to review it and to submit their comments, suggestions, and recommendations for changes to ORNL. These comments formed the basis for many of the changes that appear in this document.

The format of grouping design subjects of a specific nature under topical headings was chosen although it has the disadvantage that the topics do not follow the order in which they appear in the regulations; however, it is strongly suggested that requests for cask approvals that are submitted to the AEC and the DOT follow the appropriate format and order of the regulations to avoid confusion.

Methods of analysis suggested in the Guide are intended to provide reasonably accurate information about cask design. Where the accuracy of the analysis is not known, a factor of safety is assigned to account for these uncertainties. Departures from these analysis methods are acceptable, provided the method used can be justified on the basis of equivalent or improved safety in the resulting cask.

The Guide contains eight chapters. Chapter 1 consists of introductory remarks. Chapter 2 is concerned with the structural design of shipping casks. Discussions of the materials of construction and the methods of fabrication, which are intimately associated with design, follow in Chaps. 3 and 4, respectively. Chapter 5 deals with heat transfer. Chapter 6 describes the kinds of evidence that should be considered acceptable

for proving that a system conforms to the criticality requirements of existing Federal regulations. Information on shielding is presented in Chap. 7, and Chap. 8 provides information on uranium as a structural and shielding material.

Early versions of the regulations indicated that, for calculational purposes, the impact resulting from the 30-ft free fall could be considered equivalent to applying a 60 g decelerating force to the cask for 0.016 sec. Although this specification was removed in later versions of the regulations, it is occasionally used to indicate compliance to the 30-ft-drop requirement. Our investigations indicate that the application of such a force will not produce damage similar to that produced by a 30-ft drop. Damage may be better assessed by analytical methods based on the conservation of energy principle, as outlined in Chap. 2.

At the present time there is insufficient data available to predict with confidence the best weld joint design for a lead-shielded cask. Some limited information, based on observations of static and dynamic tests and personal contacts with first-hand observers of cask impacts, leads ORNL to believe that some joint designs will withstand the 30-ft free fall more effectively than others. Thus, the joint designs recommended in Chap. 2 are based on what is considered to be good engineering practice, using the information available.

Although loss of shielding is discussed in Chap. 2, the primary hazard resulting from the 30-ft free fall is a breach of the cask containment; for this reason it is necessary to protect closures (including valves, pressure relief lines, etc.) from impact. Energy absorbers that may be useful for this purpose are discussed in Sect. 2.8.

One of the major requirements of the cask analysis is to show that the integrity of the cask seal can survive the impact. This seal is generally maintained by a force on the lid closure, which is secured by bolts or studs; and, for the most part, the problem involves the energy absorption capacity of these bolts or studs. While sufficient data are not available to permit rigorous computation of the capacity of a given

stud or bolt the equations given in Sect. 2.4 will provide conservative bolt pattern designs for closures.

Since the primary aims of cask design are to shield and to contain a source of radioactive material, the materials of construction (discussed in Chap. 3) must be capable of performing satisfactorily when they are exposed to a wide range of environmental conditions as specified in the regulations. From the standpoint of use as a fabrication material, a steel should have adequate strength, ductility, and toughness at ambient temperatures. We have assumed that materials that require a minimum of 15 ft-lb of energy to break a Charpy keyhole specimen at a temperature of -40°F will function satisfactorily under normal operating conditions, as described in the regulations; such as toughness should be sufficient to prevent brittle fracture from occurring at low temperatures.

In contrast to the high degree of reliance placed on steel shells of casks, the requirements for steel used for supports, lifting, tie-down, and similar noncontainment structures can often be relaxed. The consequence of a failure in these components is minimal since one material failure, by itself, generally would not be sufficient to cause loss of cask contents or shielding.

The designer is free to specify materials other than those recommended; however, the factors described in Chap. 3 must be accounted for in the cask design. To aid the designer, a list of materials that are acceptable for radiation shielding and criticality control in shipping casks is also provided in this chapter.

The fabrication and inspection requirements for shipping casks are not specifically covered by existing codes and standards. Chapter 4 indicates minimum quality assurance requirements similar to those recommended by the AEC and outlined in their RDT standard F2-2. To ensure that the requirements are adhered to, an inspector, as a representative of the cask purchaser, would audit the manufacturer's procurement, fabrication, inspection, and testing records to determine compliance with the procurement specifications. Such a system will be worth the expense incurred, because of the positive assurances of safety and quality of the

final product it will afford to both the cask purchaser and the U.S. Atomic Energy Commission.

Both solar and decay heat sources are considered in calculating the maximum temperature of the spent fuel and cask expected under normal shipping conditions in Chap. 5. Although both of these loads vary as a function of time, the cask is generally designed for a specified heat load that accounts for these two sources. Since the solar heat load affects the surface temperature of large, massive casks more than their internal cavity temperatures, surface temperature limits (generally 180°F per DOT and IAEA) must be closely examined. Often internal temperatures can be calculated using an average solar heat load. (see example in Sect. 5.3.1).

The response of a cask to the hypothetical fire stipulated in the regulations is difficult to evaluate accurately. For example, few fire tests of casks have been instrumented properly to permit theoretical and experimental comparisons to be made. Data that have been accumulated thus far indicate that testing should be carried out on a prototype cask rather than a scale model in order to obtain useful results. More recently, it appears that the furnace testing of a cask at 1475°F may not be equivalent to the fire test postulated in the regulations because of the inability to control the emissivity of the source to the stated value of 0.9. In addition, in an actual test there is inevitably a convection as well as a radiation coupling between the cask and heat source that is not alluded to in the regulations. Such a situation makes the correlation of theory and experiment difficult.

Federal regulations require every shipment of fissile material to remain subcritical at all times during normal transport, including loading and unloading, and under hypothetical accident conditions leading to the most reactive credible configuration. Chapter 6 in the Guide is concerned with the proof of adherence to the requirement of subcriticality rather than with the method of maintaining subcriticality. In the interest of economy and practicality, a shipper should be allowed to exercise any practical controls he desires in rendering a system subcritical; however, he must present proof that these controls are adequate. The types of proof considered acceptable are discussed.

Proof of subcriticality can best be substantiated by arranging the desired fuel in the most reactive credible configuration with respect to the shipping cask design. Thus it would be desirable to have the conceptual cask design available at the same time that reactor critical experiments on the fuel are being performed, since only a few additional experiments would be needed to predict the degree of subcriticality that would be attained during shipment. When this is not possible, the proof of subcriticality must depend upon calculational methods. The accuracy of such methods may be verified by analyzing selected critical experiments in which a similar fuel has been used. The Guide provides an annotated listing of a wide variety of experiments that may be used for this purpose.

Chapter 7 presents information, in the form of a nomograph, that will provide cask reviewers a quick and reasonably accurate method for determining whether the thickness of the lead shielding in a given cask is adequate for a particular purpose.

Since regulations specify dose rates 3 ft from the cask surface as well as surface dose rates, a nomograph is given that relates surface dose rate to a dose rate of 10 mr/hr at a location 3 ft from the surface as a function of cask dimensions.

1.1 Scope

The Guide deals extensively with casks having steel shells and lead shielding since casks of this type are most commonly used. However, the structural and shielding properties of uranium are discussed in Chap. 8.

1.2 Cask Nomenclature

Figure 1.1 is a cutaway diagram of a spent fuel shipping cask showing the principal components. These components are referred to throughout this Guide.

1.3 Quality Assurance

A manufacturer needs a quality program which will ensure that the finished cask will properly reflect the cask owners requirements. The

requirements discussed in this Guide are considered the mininum to provide assurance of quality control for most shipping casks. The designer must exercise good judgment and adopt stricter measures where greater performance requirements are warranted.

The cask manufacturer should provide his own inspection and test personnel and facilities to maintain control of the quality of materials, components, and fabrication throughout the cask construction.

ORNL DWG. 68-12260

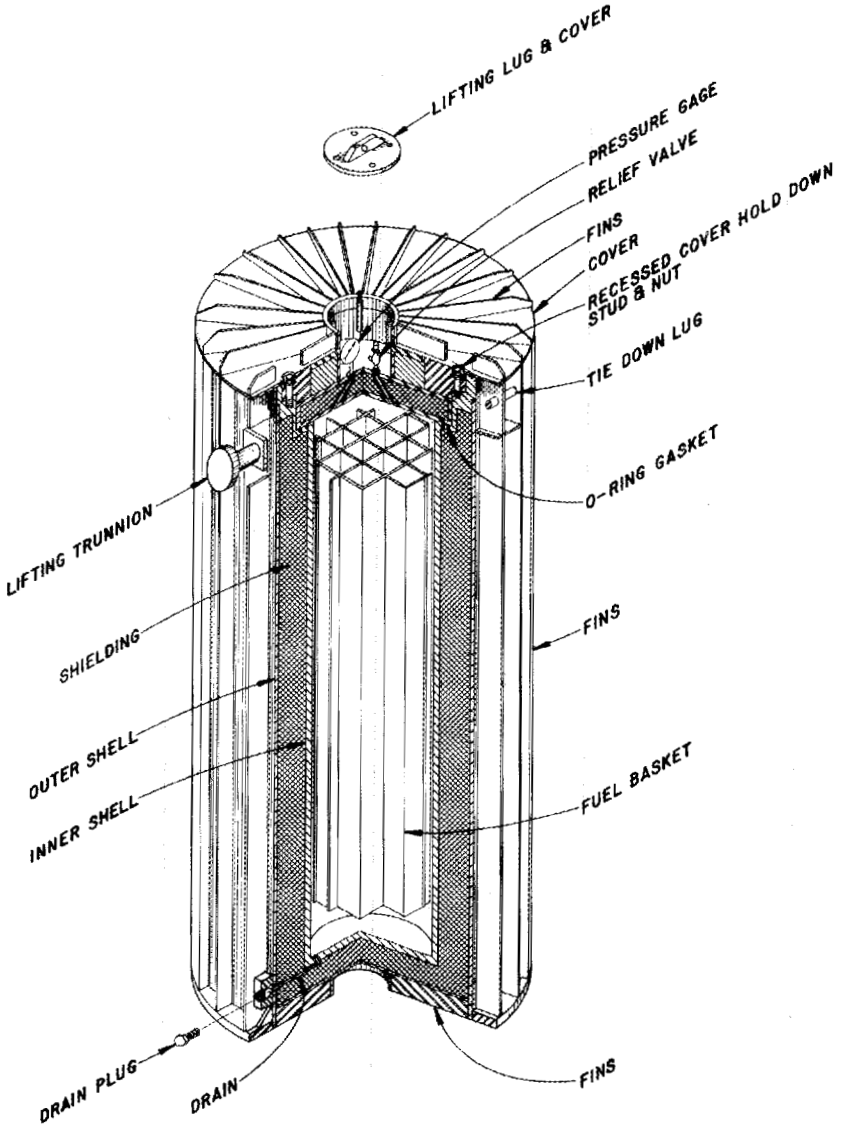

Fig. 1.1. Cutaway Diagram of a Shipping Cask Showing Its Principal Components.

The purchaser's inspector must verify that the manufacturing quality control is maintained and that all parts and work processes are in accordance with the approved drawings and specifications. The inspector must have the right to stop work on the cask at any time when he feels that the assurance of quality is being jeopardized.

Material test reports, heat treatment charts, and other documents serving as evidence to document the entire fabrication are required to be maintained in a Fabrication Record (Sect. 4.10) by the manufacturer and delivered with the cask to the purchaser. The owner, or his representative, is required to be aware of, and to approve, all such documents before they are placed in the record. This is to ensure the owner's complete awareness of all phases of the construction. Such approval should not be construed to relieve the cask manufacturer of his responsibility to conform to the design as specified in the contract.

1.4 Reports

The designer will furnish a cask design report to the purchaser which will list all design assumptions, cask limitations, and maintenance requirements. In addition, he will submit a cask operations manual which will indicate all known service limits.

1.5 Cask Approvals[5]

1.5.1 General

A shipper should first examine the regulations[1] to determine if there are packages that have already been approved by the Department of Transportation for use in transporting the material under consideration. Such packages are referred to as "specification containers."

If there are no specification containers that fit his need, the shipper must request special permission from the DOT and/or the AEC to ship his material in an existing cask which has been approved; if none are available, a new cask must be designed.

If a new cask must be designed, the request for approval of the regulating bodies should be as broad as possible with regard to both present and possible future conditions of use.

Occasionally, after the package has been in use, the analysis is found to have been conservative; therefore, if broader coverage, based on experience, is desirable, a modification to the original permit may be made.

In the event that the package is likely to be used for overseas shipments, the requirements of the IAEA[4] should be considered and a request from the competent authority (the U.S. Department of Transportation) for approval to ship under international regulations should be sought at the same time that domestic approval is being obtained.

1.5.2 Type of Packages

In accordance with the philosophy on which international shipping regulations for radioactive material are based, the United States Department of Transportation has divided radioactive material into Groups I-VII (see Table 1.1), depending on the radiotoxicity of the isotope concerned, and has divided shipping packages into Types A and B. Smaller amounts of more toxic material and larger amounts of less toxic material may be shipped in the same type of package. Type A packages are limited to small amounts of radioactive material, which, if released in the event that a package is destroyed, would not have catastrophic consequences. Type B packages are for shipments of somewhat larger amounts of radioactive material and are designed to contain the radioactive material under conditions of hypothetical shipping accidents. Quantities of radioactive material larger than those specified for Type B packages must be shipped in packages specially approved by the USAEC and the Department of Transportation.

Table 1.2 should be used to determine the group No. for radioactive materials not listed in Table 1.1.

Table 1.1. Transport Grouping of Radionuclides

Element*	Radionuclide***	Group	Specific Activity (Curies/g)
Actinium (89)	Ac 227	I	7.2×10
	Ac 228	I	2.24×10^{6}
Americium (95)	Am 241	I	3.24
	Am 243	I	1.85×10^{-1}
Antimony (51)	Sb 122	IV	3.90×10^{6}
	Sb 124	III	1.76×10^{4}
	Sb 125	III	1.43×10^{3}
Argon (18)	A 37	VI	1.01×10^{6}
	A 41	II	4.25×10^{7}
	**A 41 (Uncompressed)	V	
Arsenic (33)	As 73	IV	2.36×10^{4}
	As 74	IV	1.01×10^{6}
	As 76	IV	1.56×10^{6}
	As 77	IV	1.05×10^{6}
Astatine (85)	At 211	III	2.06×10^{6}
Barium (56)	Ba 131	IV	8.7×10^{4}
	Ba 140	III	7.3×10^{4}
Berkelium (97)	Bk 249	I	1.80×10^{3}
Beryllium (4)	Be 7	IV	3.51×10^{6}
Bismuth (83)	Bi 206	IV	9.9×10^{4}
	Bi 207	III	2.16×10^{2}
	Bi 210	II	1.24×10^{6}
	Bi 212	III	1.47×10^{7}
Bromine (35)	Br 82	IV	1.06×10^{6}
Cadmium (48)	Cd 109	III	2.55×10^{3}
	Cd 115 m	III	2.64×10^{4}
	Cd 115	IV	5.1×10^{6}
Calcium (20)	Ca 45	IV	1.91×10^{4}
Californium (98)	Cf 249	I	3.05
	Cf 250	I	1.31×10^{2}
	Cf 252	I	6.5×10^{2}
Carbon (6)	C 14	IV	4.59
Cerium (58)	Ce 141	IV	2.80×10^{4}
	Ce 143	IV	6.6×10^{6}
	Ce 144	III	3.18×10^{3}
Cesium (55)	Cs 131	III	1×10^{6}
	Cs 134 m	IV	7.4×10^{6}
	Cs 134	III	1.22×10^{3}
	Cs 135	IV	8.8×10^{-4}
	Cs 136	IV	7.4×10^{4}
	Cs 137	IV	9.82×10
Chlorine (17)	Cl 36	III	3.21×10^{-2}
	Cl 38	IV	1.33×10^{9}
Chromium (24)	Cr 51	IV	9.2×10^{4}
Cobalt (27)	Co 56	III	3.02×10^{4}
	Co 57	IV	8.5×10^{3}
	Co 58 m	IV	5.9×10^{6}
	Co 58	IV	3.33×10^{4}
	Co 60	III	1.14×10^{3}
Copper (29)	Cu 64	IV	3.83×10^{6}
Curium (96)	Cm 242	I	3.32×10^{3}
	Cm 243	I	4.21×10
	Cm 244	I	8.2×10
	Cm 245	I	1.04×10^{-1}
	Cm 246	I	3.64×10^{-1}
Dysprosium (66)	Dy 154	III	1.57×10^{6}
	Dy 165	IV	8.2×10^{6}
	Dy 166	IV	2.30×10^{6}
Erbium (68)	Er 169	IV	8.2×10^{4}
	Er 171	IV	2.35×10^{6}
Europium (63)	Eu 150	III	1.39×10^{6}
	Eu 152 m	IV	2.24×10^{6}
	Eu 152	III	1.85×10^{2}
	Eu 154	II	1.45×10^{2}
	Eu 155	IV	1.36×10^{3}
Fluorine (9)	F 18	IV	9.3×10^{7}
Gadolinium (64)	Gd 153	IV	3.62×10^{3}
	Gd 159	IV	1.10×10^{6}
Gallium (31)	Ga 67	III	6.0×10^{6}
	Ga 72	IV	3.09×10^{6}
Germanium (32)	Ge 71	IV	1.61×10^{6}
Gold (79)	Au 193	III	9.3×10^{5}
	Au 194	III	4.10×10^{5}
	Au 195	III	3.72×10^{5}
	Au 196	IV	1.20×10^{6}
	Au 198	IV	2.45×10^{6}
	Au 199	IV	2.09×10^{6}
Hafnium (72)	Hf 181	IV	1.62×10^{4}
Holmium (67)	Ho 166	IV	6.9×10^{6}
Hydrogen (1)	H 3 (see tritium)		
Indium (49)	In 113 m	IV	1.60×10^{7}
	In 114 m	III	2.29×10^{4}
	In 115 m	IV	6.1×10^{6}
	In 115	IV	
Iodine (53)	I 124	III	2.34×10^{5}
	I 125	III	1.74×10^{4}
	I 126	III	7.8×10^{4}
	I 129	III	1.62×10^{-4}
	I 131	III	1.23×10^{5}
	I 132	IV	1.05×10^{7}
	I 133	III	1.13×10^{6}
	I 134	IV	2.68×10^{7}
	I 135	IV	3.48×10^{6}
Iridium (77)	Ir 190	IV	6.2×10^{4}
	Ir 192	III	9.1×10^{3}
	Ir 194	IV	6.5×10^{5}
Iron (26)	Fe 55	IV	2.22×10^{3}
	Fe 59	IV	4.92×10^{4}
Krypton (36)	Kr 85 m	III	8.4×10^{6}
	**Kr 85 m (uncompressed)	V	
	Kr 85	III	3.97×10^{2}
	**Kr 85 (uncompressed)	VI	
	Kr 87	II	2.77×10^{7}
	**Kr 87 (uncompressed)	V	
Lanthanium (57)	La 140	IV	5.6×10^{5}
Lead (82)	Pb 203	IV	2.97×10^{6}
	Pb 210	II	8.8×10
	Pb 212	II	1.40×10^{6}
Lutetium (71)	Lu 172	III	4.56×10^{6}
	Lu 177	IV	1.09×10^{6}
Magnesium (12)	Mg 28	III	5.2×10^{6}
Manganese (25)	Mn 52	IV	4.42×10^{5}
	Mn 54	IV	8.3×10^{3}
	Mn 56	IV	2.17×10^{7}
Mercury (80)	Hg 197 m	IV	6.6×10^{5}
	Hg 197	IV	2.45×10^{5}
	Hg 203	IV	1.37×10^{4}
Mixed Fission Products	MFP	II	Not defined
Molybdenium (42)	Mo 99	IV	4.73×10^{5}
Neodymium (60)	Nd 147	IV	8.0×10^{4}
	Nd 149	IV	1.05×10^{7}
Neptunium (93)	Np 237	I	6.9×10^{-4}
	Np 239	I	2.33×10^{5}
Nickel (28)	Ni 56	III	3.65×10^{5}
	Ni 59	IV	8.1×10^{-2}
	Ni 63	IV	4.55×10
	Ni 65	IV	1.88×10^{7}
Niobium (41)	Nb 93 m	IV	1.05×10^{3}
	Nb 95	IV	3.93×10^{4}
	Nb 97	IV	2.61×10^{7}

Table 1.1. Transport Grouping of Radionuclides (Cont'd.)

Element	Radionuclide***	Group	Specific Activity (Curies/g)
Osmium (76)	Os 185	IV	7.3×10^{5}
	Os 191 m	IV	1.17×10^{6}
	Os 191	IV	4.56×10^{4}
	Os 193	IV	5.3×10^{5}
Palladium (46)	Pd 103	IV	7.5×10^{4}
	Pd 109	IV	2.12×10^{5}
Phosphorus (15)	P 32	IV	2.88×10^{5}
Platinum (78)	Pt 191	IV	2.28×10^{5}
	Pt 193	IV	
	Pt 193 m	IV	1.99×10^{5}
	Pt 197 m	IV	1.22×10^{7}
	Pt 197	IV	8.6×10^{6}
Plutonium (94)	Pu 238 (F)	I	1.68×10
	Pu 239 (F)	I	6.17×10^{-2}
	Pu 240	I	2.27×10^{-1}
	Pu 242	I	3.90×10^{-3}
Polonium (84)	Po 210	I	4.5×10^{3}
Potassium (19)	K 42	IV	6.0×10^{5}
	K 43	III	3.26×10^{6}
Praseodymium (59)	Pr 142	IV	1.15×10^{6}
	Pr 143	IV	6.6×10^{4}
Promethium (61)	Pm 147	IV	9.4×10^{3}
	Pm 149	IV	4.23×10^{5}
Protactinium (91)	Pa 230	I	3.21×10^{4}
	Pa 231	I	4.52×10^{-2}
	Pa 233	II	2.08×10^{4}
Radium (88)	Ra 223	II	5.0×10^{4}
	Ra 224	II	1.60×10^{5}
	Ra 226	I	9.8×10^{-1}
	Ra 228	I	2.34×10^{2}
Radon (86)	Rn 220	IV	9.4×10^{8}
	Rn 222	II	1.54×10^{5}
Rhenium (75)	Re 183	IV	4.61×10^{3}
	Re 186	IV	1.90×10^{5}
	Re 187	IV	3.83×10^{-3}
	Re 188	IV	1.0×10^{6}
	Re Natural	IV	2.4×10^{-3}
Rhodium (45)	Rh 103 m	IV	3.21×10^{7}
	Rh 105	IV	8.2×10^{5}
Rubidium (37)	Rb 86	IV	8.1×10^{4}
	Rb 87	IV	6.6×10^{-8}
	Rb Natural	IV	1.81×10^{-3}
Ruthenium (44)	Ru 97	IV	5.5×10^{5}
	Ru 103	IV	3.19×10^{4}
	Ru 105	IV	6.6×10^{6}
	Ru 106	III	3.38×10^{3}

Element*	Radionuclide***	Group	Specific Activity (Curies/g)
Samarium (62)	Sm 145	III	2.68×10^{3}
	Sm 147	III	1.95×10^{-8}
	Sm 151	IV	2.55×10
	Sm 153	IV	4.35×10^{5}
Scandium (21)	Sc 46	III	3.38×10^{4}
	Sc 47	IV	8.2×10^{5}
	Sc 48	IV	1.49×10^{5}
Selenium (34)	Se 75	IV	1.44×10^{4}
Silicon (14)	Si 31	IV	3.86×10^{7}
Silver (47)	Ag 105	IV	3.11×10^{4}
	Ag 110 m	III	4.70×10^{3}
	Ag 111	IV	1.57×10^{5}
Sodium (11)	Na 22	III	6.3×10^{3}
	Na 24	IV	8.7×10^{5}
Strontium (38)	Sr 85 m	IV	3.16×10^{7}
	Sr 85	IV	2.37×10^{4}
	Sr 89	III	2.88×10^{4}
	Sr 90	II	1.45×10^{2}
	Sr 91	III	3.56×10^{6}
	Sr 92	IV	1.26×10^{7}
Sulphur (16)	S 35	IV	4.29×10^{4}
Tantalum (73)	Ta 182	III	6.2×10^{3}
Technitium (43)	Tc 96 m	IV	3.31×10^{7}
	Tc 96	IV	3.24×10^{5}
	Tc 97 m	IV	1.48×10^{4}
	Tc 97	IV	1.42×10^{-3}
	Tc 99 m	IV	5.2×10^{5}
	Tc 99	IV	1.72×10^{-2}
Tellurium (52)	Te 125 m	IV	1.80×10^{4}
	Te 127 m	IV	9.8×10^{3}
	Te 127	IV	2.63×10^{5}
	Te 129m	III	2.47×10^{4}
	Te 129	IV	1.97×10^{7}
	Te 131 m	III	8.0×10^{6}
	Te 132	IV	3.06×10^{5}
Terbium (65)	Tb 160	III	1.11×10^{4}
Thallium (81)	Tl 200	IV	5.8×10^{5}
	Tl 201	IV	2.17×10^{5}
	Tl 202	IV	5.4×10^{4}
	Tl 204	III	4.28×10^{3}
Thorium (90)	Th 227	II	3.17×10^{4}
	Th 228	I	8.3×10^{2}
	Th 230	I	1.94×10^{-2}
	Th 231	I	5.3×10^{5}
	Th 232	III	1.11×10^{-7}
	Th 234	II	2.32×10^{4}
	Th Natural	III	1.11×10^{-7}

Element*	Radionuclide***	Group	Specific Activity (Curies/g)
Thulium (69)	Tm 168	III	3.9×10^{3}
	Tm 170	III	6.0×10^{3}
	Tm 171	IV	1.12×10^{3}
Tin (50)	Sn 113	IV	9.7×10^{3}
	Sn 117 m	III	8.0×10^{4}
	Sn 121	III	9.4×10^{3}
	Sn 125	IV	1.85×10^{5}
Tritium (1)	H 3	IV	9.7×10^{3}
	H 3 (as gas or luminous paint)	VII	9.7×10^{3}
Tungsten (74)	W 181	IV	4.98×10^{2}
	W 185	IV	9.7×10^{2}
	W 187	IV	7.0×10^{5}
Uranium (92)	U 230	II	2.73×10^{4}
	U 232	I	2.08×10
	U 233 (F)	II	9.5×10^{-3}
	U-234	II	6.2×10^{-3}
	U 235 (F)	III	2.14×10^{-6}
	U 236	II	6.3×10^{-6}
	U 238	III	3.33×10^{-7}
	U Natural	III	7.06×10^{-7}
	U Enriched (F)	III	
	U Depleted	III	
Vanadium (23)	V 48	IV	1.70×10^{5}
	V 49	III	8.1×10^{3}
Xenon (54)	Xe 125	III	1.39×10^{5}
	Xe 131 m	III	8.3×10^{4}
	**Xe 131 m (uncompressed)	V	
	Xe 133	III	1.86×10^{5}
	**Xe 133 (uncompressed)	VI	
	Xe 135	II	2.54×10^{5}
Ytterbium (70)	Yb 175	IV	1.78×10^{5}
Yttrium (39)	Y 88	III	1.43×10^{4}
	Y 90	IV	5.3×10^{5}
	Y 91 m	III	4.11×10^{7}
	Y 91	III	2.50×10^{4}
	Y 92	IV	9.5×10^{5}
	Y 93	IV	3.24×10^{5}
Zinc (30)	Zn 65	IV	8.2×10^{3}
	Zn 69 m	IV	3.29×10^{5}
	Zn 69	IV	5.3×10^{7}
Zirconium (40)	Zr 93	IV	3.50×10^{-3}
	Zr 95	III	2.12×10^{4}
	Zr 97	IV	1.90×10^{5}

*Atomic number shown in parentheses.

**Uncompressed means at a pressure not exceeding one atmosphere.

***Atomic weight shown after the radionuclide symbol.

m Metastable state.

(F) Fissile material.

Table 1.2. Transport Group Classification Table

Atomic No.	Physical Half-Life: 0 to 1000 days	1000 days to 10^6 years	Over 10^6 years
1-81	Group III	Group II	Group III
82 and above	Group I	Group I	Group III

1.5.3 Exemptions from Specification Packaging, Marking, and Labeling:

Exempt Quantity Packaging Requirements

1. Radioactive materials in quantities not exceeding those listed in Table 1.3 are exempt from specification packaging, marking, and labeling.
2. Packages must not leak under conditions normally incident to transportation.
3. The containment vessel must bear the marking "RADIOACTIVE."
4. The air waybill must be marked as "Exempted Radioactive Material." Also, the words "No Label Required" must appear on the shipping papers.
5. The radiation dose rate at the surface of the package must not exceed 0.5 mr/hr.

Empty Packaging

1. Empty packaging that has previously contained radioactive material must be carefully cleaned internally, securely closed, and be in good condition prior to shipping.
2. The outside of the package must be marked with an "EMPTY" label throughout the United States and an "Exempted Empty Packaging Having Contained Radioactive Materials" label for foreign shipments.

3. All old labeling and marking must be masked.

4. Foreign shipments are entered on the air waybill as "Exempted Empty Packaging Having Contained Radioactive Materials."

Table 1.3. Exempt Quantity Package Limits

Group I	0.01 mc
Group II	0.1 mc
Group III	1 mc
Group IV	1 mc
Group V or VI	1 mc
Group VII	25 curies
Special form	1 mc
$^{3}H_2O$	25 curies at concentration not > 0.5 mc/ml
^{235}U	15 g

1.5.4 Isotope Package Limits

Packages containing amounts of materials that are between exempt quantities and Type A packaging limits must meet Type A requirements; above this limit, the package must meet Type B requirements as set forth in refs. 1 and 3. Table 1.4 gives the packaging limits as a function of isotope group.

Material whose activity exceeds the Type B packaging limits is considered to be a large source. Packages that contain large sources must be submitted to the AEC and DOT for approval.

Table 1.4. Isotope Package Limits

Groups and Special Form of Radioactive Materials	Maximum Net Quantity per Package (in curies)	
	Type A Packaging	Type B Packaging
Group I	0.001	20
Group II	0.05	20
Group III	3	200
Group IV	20	200
Special form of Groups I to IV	20	5000
Group V	20	5000
Group VI	1000	50000
Group VII	1000	50000

1.5.5 Fissile Materials

1. Packages containing not more than 15 g of fissile material are exempt from fissile shipping regulations. However, such material must be packaged in the same manner as other radionuclides – according to the number of curies present. Fifteen grams of ^{235}U is an exempt quantity of radioactive material. The limits of all materials considered to be fissile by the regulations are given in Table 1.5.

Table 1.5. Fissile Packaging Limits for Type A Packages

Nuclide	Activity Limit (Millicurie)	Weight Limit
^{233}U	50	5.25 g
^{235}U	Exempt	15 g
^{238}Pu	1	58 μg
^{239}Pu	1	16.3 mg
^{241}Pu	1	9.5 μg

2. Fissile material exceeding 1 mc, but not more than 20 curies, and up to 15 g must be welded into a capsule or placed in a Spec 2R container.* Such shipments must be covered by a "special form" certificate at the time of shipment.

3. Fissile material whose activity exceeds 20 curies of activity, or whose weight exceeds 15 g, requires a Spec 6M[1] or other DOT-approved package.

1.6 References

1. Code of Federal Regulations, Title 49, Parts 171-178, Federal Register 33 No. 194, Part II (Oct. 4, 1968).

2. Code of Federal Regulations, Title 10, Part 71.

3. L. B. Shappert, Irradiated Fuel Shipping Cask Design Guide, ORNL TM-2410 (January 1969).

4. Regulations for the Safe Transport of Radioactive Material, Safety Series No. 6, 1967 ed., IAEA, Vienna, 1967.

5. R. D. Seagren, ORNL Isotopes Division Guide for the Packaging of Radioactive Materials for Transport, ORNL-TM-2769 (in publication).

*T. C. George, Agent, Hazardous Materials Regulations of the Department of Transportation including Specifications for Shipping Containers, Tariff No. 23, p. 193, issued Aug. 3, 1969.

2. STRUCTURAL DESIGN

2.1 Inner Shell Thickness

The inner shell thickness of the cask, exclusive of closure devices, should be designed as if it were an unfired pressure vessel and meets, as a minimum, the requirements of Division I of Sect. VIII of the ASME Boiler and Pressure Vessel Code. This code relates size, material of construction, and internal and external pressure to thickness. The inner shell should not be less than 3/8 in. nominal thickness.

Since it is necessary to establish a shell thickness that will allow the cavity to remain serviceable under all expected internal and external loads, the expected service of the cask must be examined. External loads will be imposed from the static head of lead during pouring, the shrinkage of lead upon cooling, the expansion of lead resulting from a fire, or the movement of lead as a result of impact. Internal loads occur as a result of coolant pressure in the cavity or possibly from thermal expansion of internal components such as a basket.

Because of the type of environment to which the inner shell is exposed, the material should be capable of being decontaminated without loss of serviceability. Acceptable materials of construction are discussed in Chap. 3.

If it is desirable to perform a more-detailed analysis than is afforded by Sect. VIII of the ASME Pressure Vessel Code, ORNL TM-1312, Vol. 1, which deals with inner shells of both cylindrical and flat sided casks, should be consulted.

2.2 Outer Shell Thickness

A 40-in. free fall of a lead-shielded cask onto a 6-in.-diam punch may cause failure* of the cask in one of several ways. The most obvious

---

*Failure is defined as the inability of the cask to meet the regulations.

is a rupture of the outer shell, which could result in an excessive loss of lead if the cask were involved in a fire. Less obvious, but nonetheless important, are the possibilities of a gasket failure (if the impact is in close proximity to the cask closure) or a substantial reduction in shielding (if the indentation is particularly deep).

For hot-rolled carbon steel and stainless steel outer shells, the minimum outer shell thickness required to withstand the punching action of the piston is given by Eq. (2.1). (Note the limitations given in this section concerning outer shell diameter and material ductility.)

$$t = (W/S)^{0.71} , \qquad (2.1)$$

where

t = shell thickness, in.,

W = cask weight, lb, and

S = ultimate tensile strength of the outer shell, psi.

Figure 2.1 shows a photomicrograph of a section of a steel shell that was damaged to the point of incipient puncture as a result of impact on a punch. Note the partial fracture of the test specimen.

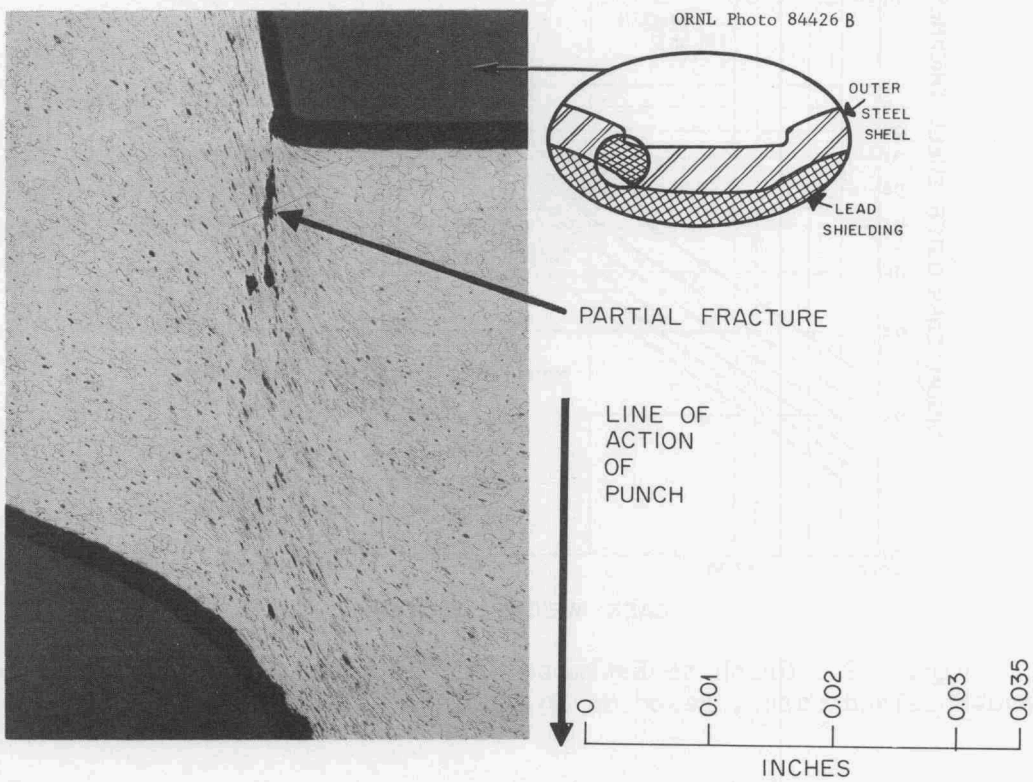

Fig. 2.1. Photomicrograph of Hot-Rolled Steel Plate Tested at Its Incipient Puncture Energy.

A convenient representation of Eq. (2.1) is given in Fig. 2.2. Equation (2.1) may be used for both flat-sided and cylindrical casks within certain limits. Tests have indicated[1] that for cylindrical casks with diameters greater than about 30 in., Eq. (2.1) gives acceptable results; for diameters less than 30 in., it may give nonconservative results. Until more definitive tests can be performed, it is recommended that a factor of 1.3 times the actual cask weight be used in Eq. (2.1) when it is applied to casks having diameters less than 30 in.

When Eq. (2.1) is used, consideration should be given to the reduction in jacket flexibility that is caused by various structural features. The energy required to puncture the jacket will be reduced from the value indicated by Fig. 2.2 by "stiffeners," such as fins, that are closer than about 9 in. from the center of the impact area. Information to quantitatively evaluate the effect of local stiffeners is not presently available.

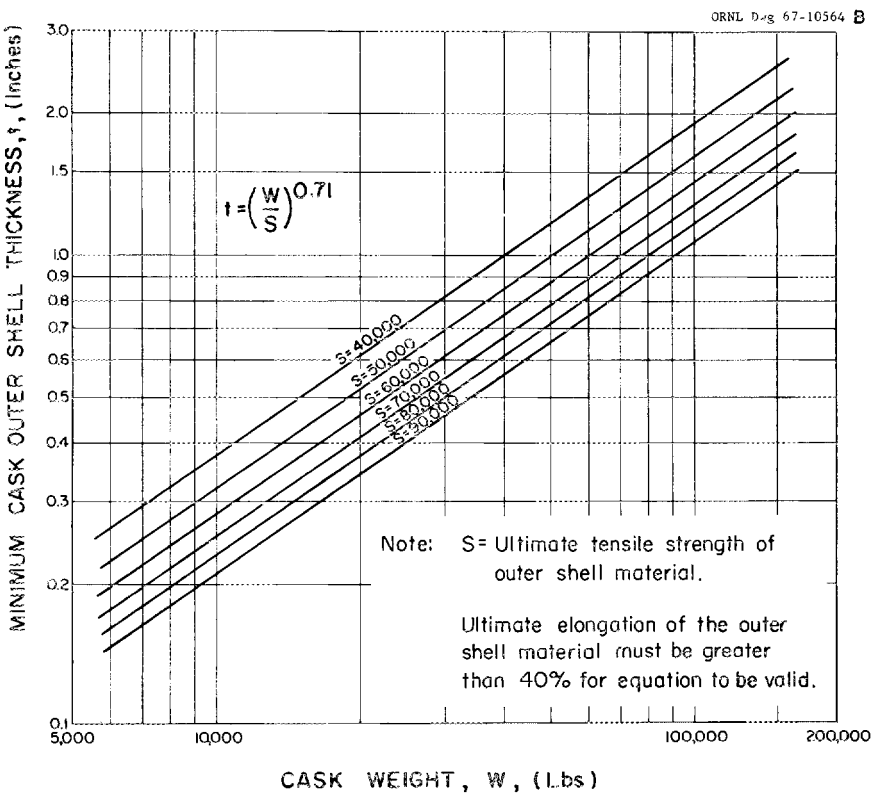

Fig. 2.2. Graph to Estimate Minimum Outer Shell Thickness for Lead-Shielded Casks, Based on Eq. (2.1).

Lead-shielded casks based on a three-shell cask wall concept have been designed and built. The design provides inner and outer shells, plus a third shell that is positioned approximately 2 in. inside the outer one; this arrangement provides for two separate chambers to contain the lead shielding. Under accident conditions, breaching of the outer shell and subsequent loss of the outer lead layer would not necessarily cause the cask to fail the required tests since the loss of 2 in. of lead shielding in a fire will limit the dose rate increase to approximately a factor of 10. The loss of lead will create an air gap that will reduce the effective heat input to the cask cavity. Results of impact tests performed using the three-shelled wall concept[2] appear promising. Considerably more energy is required to rupture the center shell of such a cask than would be expected, based on Eq. (2.1); however, this equation may be used to size the center shell without disproportionate conservatism.

A similar concept in which puncture of the outer shell may be allowed in an accident is described in a French report.[3] A layer of wet plaster, with 26% free water, is poured between the lead shield and the outer shell. If the cask is involved in a fire, the outer shell perforates by virtue of fusible plugs and the plaster dries, forming an insulating layer around the lead shield. Results of tests indicate that the layer offers adequate protection from impact followed by a fire.

Resistance to puncture may not be the only basis on which to set the outer steel shell thickness. Recently, calculations and tests conducted both here and abroad[43,44] indicate that, as the outer steel shell thickness is increased, the amount of lead melted decreases assuming the same thermal environment. The minimum outer shell thickness, which will provide good fire protection (i.e., very little lead will melt), is approximately 2-1/2 in. This protection results at least partially from the fact that the heat capacity of mild steel is approximately four times that of lead.

2.2.1 Basis for Equation (2.1)

An experimental program was initiated to investigate the conditions that would lead to the puncture of steel-jacketed, lead-shielded casks

dropped from a height of 40 in.[1,4] The results are summarized in Fig. 2.3. The three data points, which are the results of the 86,200-lb prototype model test, are correlated effectively by the equation

$$E/S = 39t^{1.4} , \qquad (2.2)$$

where

E is the energy (40 W, in in.-lb) and the other terms are given above.

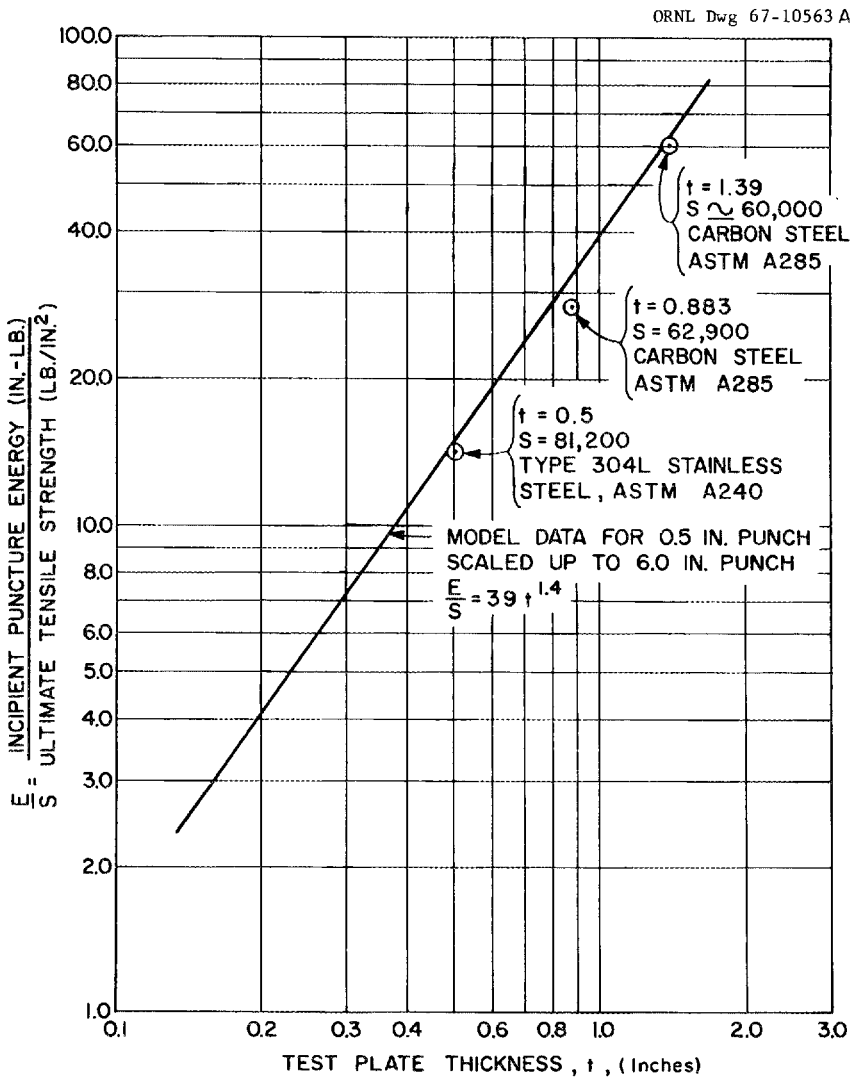

Fig. 2.3. Puncture Test Data for Lead-Backed Plates.

Equation (2.2) was developed from a geometrical scale-up of data obtained using 1:12 size model test data; that is, test specimens weighed from 35 to 75 lb, and the punch was 0.5 in. in diameter.[1,4]

Materials that were jacketed with lead and had a broad range of properties were tested in the flat-surface-model phase of the program.[1] It was found that significantly less energy was required to punch through materials having an ultimate elongation of less than 40% in a 1-in. gage length than those whose elongation was greater than 40%. Above this elongation level, the ultimate tensile strength of the shell material was the significant property of the material and, therefore, was used to correlate the data. At impact energies near puncture energy, significant deformations of the jacket were evident over an area whose diameter was about three times that of the punch diameter.

Cylindrical models from about 4 to 7 in. in diameter, with a jacket thickness of 0.075 in., were tested with punches with diameters of 0.4, 0.5, and 0.6 in. In the range of parameters tested, the shells of the cylindrical model were more difficult to puncture than those of flat surfaced (cubical) models of similar weight and shell thickness. However, some of the data reported[5] for impacts of prototype cylindrical casks on 6-in.-diam punches suggest that, for casks with diameters less than 30 in., with a punch diameter of 6 in., a cylindrical cask shell will puncture more readily than a cubical cask shell of the same weight, thickness, and material. All tests were made with the line of action of the punch being directed through the center of gravity. This is the basis for recommending that when using Eq. (2.1) for casks with diameters of less than 30 in., the weight should be increased by a factor of 1.3.

2.3 Weld Design

Welds are often particularly vulnerable to serious damage as a result of free-fall accidents and subsequent thermal exposure. This is true due to a variety of factors. Many are located in areas where they are subject to gross deformations. They normally do not possess the ductility of the base metal, and they are almost always stressed to a significant degree as a result of the welding processes. Also many welds contain flaws that

reduce their ability to deform without rupture. The very nature of welding results in stress concentrations whose removal may not be practical.

Perhaps the most vulnerable welds are corner welds or the welds joining the shell to the top and bottom heads. In the free-fall impact, when the line of action passes through or near the center of gravity, these welds are required to bend or rotate through an angle of 90°. This places the root of the weld in tension and may result in a gross crack unless the corner is adequately designed. Other structural welds are required to deform a lesser, but significant, amount. Generally, such deformation takes the form of bending of the weld and base metal over a significant length; hence the weld is not placed in jeopardy to the same degree as the corner weld.

It seems logical to assume that any weld design which will bend to an angle of 90° in a simulated dynamic incident without rupture would be adequate for a corner weld. Criteria for the adequacy of other cask structural weld joints are not so easily established. Test data are almost nonexistent, and ORNL is not aware of the failure of a complete penetration weld in a noncorner position as a result of an impact. It is, therefore, felt that a complete penetration weld is adequate for all welds away from the corner.

A test program is currently under way at Oak Ridge National Laboratory to establish which corner joint designs satisfy the requirement of nonrupture in an impact. The designs shown in Fig. 2.4, backed with lead, were struck by a weight that was dropped from a height of 30 ft. The impact caused the specimens to bend 90°. Two materials, ASTM-A-516 steel and 304L stainless steel, in 3/8-in. thicknesses, were tested. Designs 1, 5, and 6 were found to be adequate for both materials, while design 2 was adequate for the 304L stainless steel only. The remaining designs are not adequate because of gross failures. Figure 2.5 shows the results of some of the tests.

It appears that there are two approaches to maintain the integrity of welded joints. One approach is to design a weld joint having a resistance

ORNL-DWG-69-8421

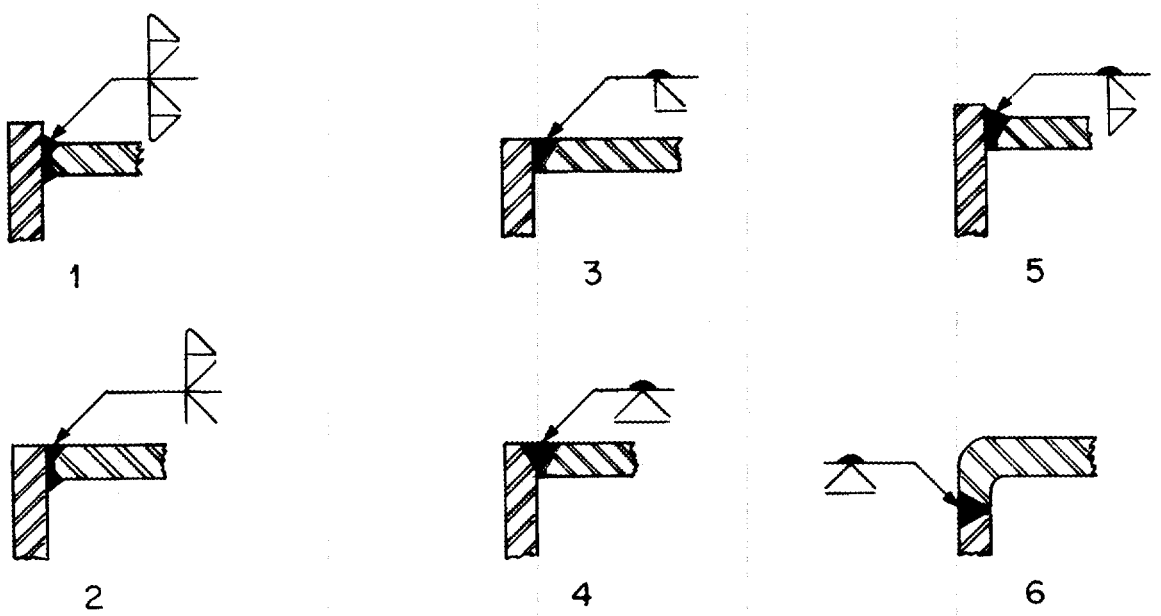

Fig. 2.4. Corner Weld Joint Test Designs.

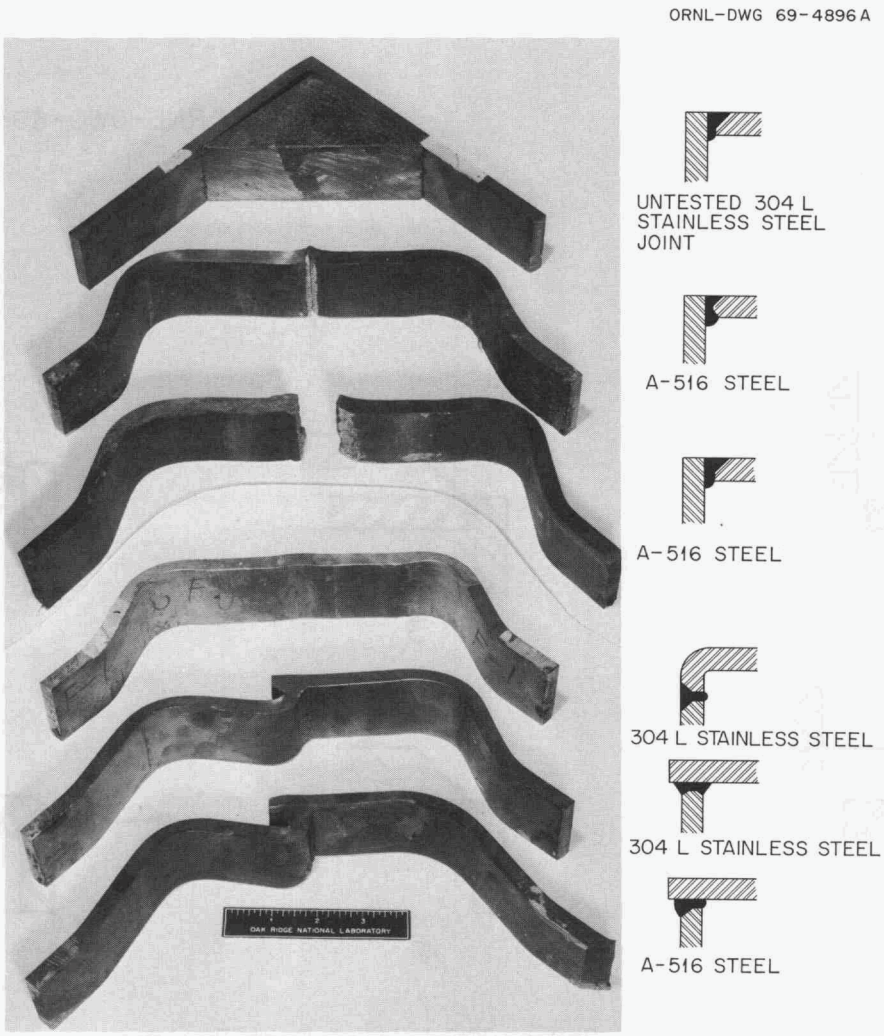

Fig. 2.5. Weld Joint Designs Tested Under a 300-lb Weight Dropped 30 ft.

to deformation significantly in excess of that possessed by the base metal, that is, one in which all or nearly all of the deformation takes place in the base metal and not the filler metal. Designs 1 and 5 are in this category. The second approach is to remove the weld joint from the vulnerable area, as in design 6. This may be done by using a formed or dished head in lieu of a flat plate for the ends of the cask. It was also established that grinding improved the ability of welds to undergo plastic deformation without rupture.

It is recognized that these tests were performed on 3/8-in. material, and therefore the results are valid only for this thickness and for high-quality welding. However, it is felt that the results (notably for designs 1, 5, and 6) illustrate that a corner weld needs to be (a) much stronger than the joined base metal, or (b) removed from the vulnerable area. Design 2 is not recommended for any material and thickness other than 304L stainless steel 3/8 in. thick due to its failure in A-516 steel.

The designs in Table 2.1 are recommended for structural butt welds. Although other welds may be acceptable, they should be examined on the basis of ease of fabrication and ability to develop full joint strength. It is permissible to use backup rings or consumable inserts for any of these welds. Welding practices required by Chap. 4 should be adhered to.

If a weld design from Table 2.1 is used in conjunction with the inspections required in Chap. 4, the cask designer may use a joint efficiency of 85% in the design of the inner shell under the recommendations of Sect. 2.1. The joint efficiency can be increased to 100%, provided the designer feels justified on the basis of thorough inspection procedures.

All welds should be made by the processes described in Sect. 4.3.1 and should be of the quality specified by Sects. 4.3.2 and 4.8.5. Welding requirements shown on engineering drawings should conform to AWS A2.0 welding symbols.

The design of a welded joint that is not a part of the cask proper will be left to the discretion of the designer and should be based on good

ORNL DWG 68-7739 B

Table 2.1. Recommended Weld Joint Configurations.

Joint Appearance	Joint Type	Weld Symbol
	Double-Vee Groove Joint, Welded Both Sides, Complete Joint Penetration. Preferred Joint For Longitudinal Welds On Outer Shell.	
	Single-Vee Groove Joint. Complete Joint Penetration, Bead Back Weld.	
	Single-Vee Groove Joint. Welded One Side, With Backing, Complete Joint Penetration.	
	Single-Vee Groove Joint. Welded One Side, With Burn Through, Complete Joint Penetration. a. Gas Tungsten Arc Process Preferred For Root Pass. b. Details Of Joint Developed By Procedure Qualification Are To Be Used In Production.	
	Single-Bevel Groove Joint. Complete Joint Penetration, Bead Back Weld.	
	Double-Bevel Groove Joint. Welded Both Sides, Complete Joint Penetration.	
	Single-J Groove Joint. Complete Joint Penetration, Bead Back Weld.	
	Double-J Groove Joint. Welded Both Sides, Complete Joint Penetration, Bead Back Weld.	
	Single-U Groove Joint, Complete Joint Penetration, Bead Back Weld.	
	Double-U Groove Joint, Welded Both Sides, Comple Joint Penetration.	

engineering practice. Consideration should be given to the effects of angular, lateral, and end restraints on the weldment when butt welds are made (as described in Sect. 4.3.5), particularly with respect to material and weld metal having an ultimate strength of 80,000 psi or higher and heavy sections of both low- and high-tensile-strength material. The addition of restraints during welding may result in cracks that might not occur otherwise.

2.4 Cask Closure, Gasketing, and Bolting Design

The primary functions of a cask closure are: (2) to provide access to the cavity within the cask, and (2) to confine the radioactive material within the cask during normal conditions of transport. Under accident conditions, some leakage of radioactivity is allowed (see Table 5.1).

While it is realistic that some leakage may occur it would be difficult to estimate the amount of radioactive material that will escape if the cask seal is breached following an accident, unless encapsulated material is being transported. As more knowledge is gained about the damage to the contents and the mechanism of the escape of radioactive materials under accident conditions, these difficulties may be resolved.

The closure design must provide for the load-carrying capacity of the gaskets, retaining studs or bolts, flanges, etc. to resist both normal and accident conditions since exposure to the hypothetical 30-ft drop, followed by the 0.5-hr fire, creates the most difficult closure problems the designer must face. If an analysis indicates that quantities larger than those permitted to escape could exist in the cavity in a mobile form after an accident, assurance of containment may have to be based on some item other than the gasket unless it has been shown that the seal will not leak.

2.4.1 Selection and Design of the Gasket

Large forces and resulting distortions that could separate the lid from the body of the cask or crush the gasket may occur as a result of the 30-ft impact. Under such conditions, the integrity of the seal

generally depends upon the design of the flanges and retaining bolts or studs; that is, if the lid and cask flanges are stiff (or if there is no relative movement between the lid and the cask due to impact) and if the gasket is located near the retaining studs, the seal would probably remain intact. These conditions can often be met by providing sacrificial parts, such as fins, to lessen the shock of impact and to distribute the impact load over a relatively wide area. Such protection is discussed in Sect. 2.8.

Gaskets that are most applicable to use as closure seals fall into several basic groups, as follows:

(1) elastomer gaskets,

(2) flat asbestos gaskets,

(3) jacketed gaskets (e.g., steel over asbestos),

(4) corrugated metal gaskets with or without soft filler,

(5) spiral-wound gaskets,

(6) plain or machined flat metal gaskets,

(7) O-ring-type metallic gaskets, and

(8) solid metal gaskets with a round or a special cross section.

The general characteristics of each of these basic groups are discussed in the following paragraphs; design information pertaining to some of the more common types of gaskets is given in Tables 2.2a, 2.2b, and 2.3.

When designed to fit in a properly designed groove, an O-ring type gasket provides an excellent seal since it cannot be crushed in an impact or damaged by excessive bolt loadings. Elastomer gaskets are frequently used to advantage, but consideration must be given to the maximum temperature reached by the gasket if the cask becomes involved in the 0.5-hr fire. Metallic O-rings can be used for this service but are more expensive and require the maintenance of a better sealing surface; however, they have the advantage of performing satisfactorily at higher operating temperatures.

Table 2.2a. Design Data for Different Types of Gaskets[a]

Type	Material	m, Gasket Factor	y, Minimum Design Seating Stress (psi)
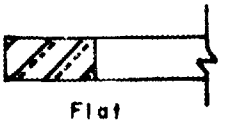 Flat	Rubber (homogeneous)		
	Below 75 Shore durometer	0.50	0
	Above 75 Shore durometer	1.00	200
	Asbestos		
	1/8 in. thick	2.00	1600
	1/16 in. thick	2.75	3700
	1/32 in. thick	3.50	6500
Spiral Wound Metal Asbestos Filled	Carbon steel	2.50	2900
	Stainless or Monel	3.00	4500
Corrugated Jacketed Asbestos Filled	Soft aluminum	2.50	2900
	Soft copper or brass	2.75	3700
Corrugated Metal, Asbestos Cord Cemented in Corrugations	Iron or soft steel	3.00	4500
	Monel	3.25	5500
	Stainless steels	3.50	6500
Corrugated	Soft aluminum	2.75	3700
	Soft copper or brass	3.00	4500
	Iron or soft steel	3.25	5500
	Monel	3.50	6500
	Stainless steels	3.75	7600
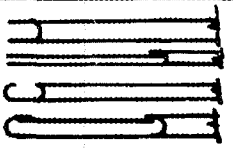 Metal Jacketed, Asbestos Filled	Soft aluminum	3.25	5500
	Soft copper or brass	3.50	6500
	Iron or soft steel	3.75	7600
	Monel	3.50	8000
	Stainless steels	3.75	9000

Table 2.2a (cont'd.)

Type	Material	m, Gasket Factor	y, Minimum Design Seating Stress (psi)
Flat Metal, Serrated or Grooved	Soft aluminum	3.25	5500
	Copper	3.50	6500
	Iron or soft steel	3.75	7600
	Monel	3.75	9000
	Stainless steels	4.25	10,100
Flat Metal	Lead	2.00	1400
	Soft aluminum	4.00	8800
	Soft copper or brass	4.75	13,000
	Iron or soft steel	5.50	18,000
	Monel	6.00	21,800
	Stainless steels	6.50	26,000
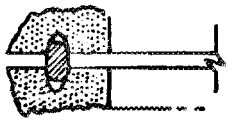 Ring Joint	Iron or soft steel	5.50	18,000
	Monel	6.00	21,800
	Stainless steels	6.50	26,000

[a]Data taken from the "ASME Boiler and Pressure Vessel Code Section VIII, Unfired Pressure Vessels"; from Machine Design, Seals Reference Issue, 36(14), 95 (June 11, 1964); and from M. F. Spotts, p. 452 in Design of Machine Elements, 3d ed., Prentice Hall, 1961.

Table 2.2b. Design Data for Different Types of Gaskets[a]

	Material	y', Minimum Seating Stress (lb/in. of gasket)
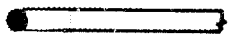 Round Cross Section	Aluminum	1300
	Soft steel (iron)	4500
	Stainless steel	6000
Wrapped Wire Core	Aluminum jacket - aluminum cores	1500
	Aluminum jacket - stainless steel cores	1500
	Stainless steel jacket - stainless steel cores	6000
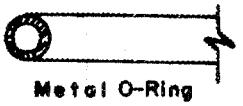 Metal O-Ring	1-16-in.-OD tube x 0.014-in.-thick wall	
	Aluminum	350
	Mild steel	850
	Inconel	1100
	Stainless steel	1300
	1/8-in.-OD tube x 0.012-in.-thick wall	
	Aluminum	100
	Inconel	300
	Stainless steel	320
	1/4-in.-OD tube x 0.012-in.-thick wall	
	Stainless steel	90

[a]Data taken from the "ASME Boiler and Pressure Vessel Code Section VIII, Unfired Pressure Vessels"; from Machine Design, Seals Reference Issue, 36(14),95 (June 11, 1964); and from M. F. Spotts, p. 452 in Design of Machine Elements, 3d ed., Prentice Hall, 1961.

Table 2.3. Sustained Temperature Limits of Gasket Materials[a]

Material	Maximum Temperature (°F)
Lead	212
Silicone rubber	400
Common brasses	500
Asbestos	500
Copper	600
Aluminum	800
Stainless steel type 304	1000
Stainless steel type 316	1000
Soft iron, low-carbon steel	1000
Stainless steel type 502	1150
Stainless steel type 410	1200
Silver	1200
Nickel[b]	1400
Monel[b]	1500
Stainless steel type 309[b]	1600
Stainless steel type 321[b]	1600
Stainless steel type 347[b]	1600
Ceramic fiber[b]	1600
Inconel[b]	2000

[a]Data taken from Machine Design, Seals Reference Issue, 36(6),19 (June 1964).

[b]Consult gasket manufacturer for high-temperature use.

To maintain a fluid-tight joint, it is necessary that the parts be tightly bolted together. The initial bolt loading must be great enough to cause local yielding of the gasket when it contacts the metal flange surfaces. The minimum contact pressure necessary to secure a tight joint is called the "yield" value, y or y', of the gasket; values of y and y' are given in Tables 2.2a and 2.2b.

Any internal fluid pressure above atmospheric in the cask cavity reduces the gasket contact pressure. Experience has shown that the ratio between the contact pressure and the fluid pressure, which is called the gasket factor (m), should not be less than a certain value if the joint is to remain tight (see Tables 2.2a and 2.2b).

Design equations using the data from Tables 2.2a and 2.2b are given in Sect. 2.4.2. For design data on special gaskets the manufacturer should be consulted.

Special gasket cross sections shown in Table 2.2b require a fine surface finish in contact with the gasket and close tolerance control, along with careful assembly. Such a finish is not always easy to maintain, even during normal operation of the cask; thus the sealing surfaces that depend on a fine finish should be inspected often. The maximum temperature limits that are recommended for solid metal gaskets in continuous service are given in Table 2.3.

Hollow O-Ring Type Metallic Gaskets. – Under operating conditions, hollow metallic O-ring gaskets possess certain characteristics that are not found in elastomer O-rings. These metallic O-rings have a natural resiliency somewhat similar to that of elastomer types, but without their temperature limitations, and can be used in both fully confined and semi-confined gasket joints. Such O-rings are dependent upon large compressive forces in the flange faces to create a seal (O-rings require approximately 20 to 30% compression across the small diameter to develop a seal.) The seal is created in a manner similar to that experienced by an ordinary flat gasket.

Stainless steel O-rings are common; 321 stainless steel is the most widely used. However, O-rings fabricated from other metals, such as aluminum and copper, are also available.

When designed for low-temperature operation, flanges, bolts, and O-rings should be made of the same material. Consideration of the maximum operating temperature in an accident determines the basic O-ring material as follows:

(1) -40 to 450°F - stainless steel,

(2) 450 to 800°F - Inconel,

(3) 800 to 1300°F - Inconel X,

(4) above 1300°F - consult O-ring manufacturer.

Metallic O-rings are often used with a coating of silver or other material to increase sealing effectiveness in seats which have a poor finish, and to reduce the probability of seizing or galling when the rings are used in screwed closures. For vacuums and low pressures, an unpressurized hollow stainless steel ring with a silver coating is used. At pressures up to 100 psi, an unpressurized ring with medium wall thickness is used; at pressures above 100 psi, a pressurized ring with a heavy wall is used. Coatings are necessary for rings that seal gases or volatile liquids.

Gaskets used for gases, vacuums, and low-viscosity liquids such as water require a coating or plating, depending upon the maximum design temperature:

(1) -430 to 1300°F - silver plating,

(2) above 1300°F - consult O-ring manufacturer,

(3) in the event that silver is not compatible with fluid - consult O-ring manufacturer.

The thickness of the wall of the tubing used to form these O-rings provides the necessary resistance to the compression that creates the initial seal; the required thickness depends a great deal upon the nature of the material to be confined. Highly viscous liquids are the easiest to seal and can be confined with thin-walled rings. Gases require a coated heavy-wall ring. The heavy-walled rings can support heavier flange loads, consequently they provide tighter seals.

Care should be exercised during assembly to ensure that the finished surfaces and the O-ring are not marred or scratched.

2.4.2 Design for Bolts or Studs to Retain Cask Lid

Closures should withstand expected decelerating forces resulting from an impact without producing stresses (in the closure fastenings) that exceed the yield strength or 50% of the ultimate strength. Where this recommendation cannot be met, then the bolts or studs should be designed to absorb all the kinetic energy of the cask closure and contents at the impact velocity (generally assumed to be 30 mph resulting from the 30-ft drop). Estimates of the energy absorption capabilities of bolts may be found in ref. 3.

The expected forces experienced by casks protected by crash frames are often amenable to calculation; in other cases, the deformation and displacements observed in model testing should provide a basis for estimating deceleration forces.

In the development of a design for bolting the cask lid, four forces must be considered. They are: (1) the force due to internal pressure, F_p, (2) the force due to the deceleration of the lid and the contents of the cask under impact conditions, F_w, (3) the force required to seat the gasket, F_{sg}, and (4) the force on the gasket required to maintain a tight joint under service conditions, F_{oc}.

The force on a cylindrical cask lid due to the internal pressure in the cask is

$$F_p = \frac{\pi p (d_g)^2}{4} , \qquad (2.3)$$

where

p = the differential pressure existing across the gasket, psi,

d_g = the mean diameter of the gasket, in.

If a cask is end-loaded and shipped horizontally, the closure for the lid may be subjected to a force caused by the impact of the cask contents against the lid when the transporting vehicle comes to a sudden stop.

The force due to the deceleration of the cask lid plus the contents of the cask can be calculated from

$$F_w = 2N_g(W_\ell + W_c), \tag{2.4}$$

where

w_ℓ = the weight of the cask lid, lb,

W_c = the weight of the contents of the cask, lb,

N_g = the mean number of g's to which the lid and contents of the cask are subjected upon impact. A method for accurately obtaining this number is not available at present, but g loadings experimentally measured at points on several cask models are discussed in Sect. 2.8; estimates of N_g may be made by employing a conservation of energy approach suggested in this and Sect. 2.7. The factor 2 is an attempt to account for the dynamic loading.

For a cylindrical lid, the force required to make the gasket material flow into the irregularities of the flange faces and seat is given by

$$F_{sg} = b\pi d_g y, = \pi d_g y' , \tag{2.5}$$

where

b = the effective gasket seating width, in. (This value may be obtained from "ASME Boiler and Pressure Vessel Code Section VIII - Unfired Pressure Vessels"),

y = the minimum design seating stress, lb/in.^{2} (see Table 2.2a),

y′ = the minimum design specific load, lb/in. (see Table 2.2b).

For cylindrical cask lids, the force required on a flat gasket to maintain a tight joint under service conditions is given by

$$F_{oc} = \pi b d_g m p, \tag{2.6}$$

where

m = the gasket factor (see Table 2.2a).

Note that F_{oc} may not be sufficient to maintain a tight joint under accident conditions in a liquid-filled cask since the dynamic pressure of the liquid under those conditions may be much greater than the static pressure.

Proper design requires that F_{oc} be equal to, or greater than, F_{sg}; however, care must be exercised to avoid overloading the gasket, particularly in designing large-diameter flanges or even relatively small ones for high-pressure service. Overloading can result in crushing of the gasket or yielding of the flange, or both. To avoid this, F_{oc} should not exceed 2 F_{sg}.

After the gasket has been selected, the minimum bolt area, A_m, is calculated from Eq. (2.7):

$$A_m = \frac{(F_p + F_w + F_{oc})}{s_a} , \qquad (2.7)$$

where

s_a = the bolt yield stress at operating temperatures, psi.

After A_m has been chosen, the actual bolting pattern may be established. One simple procedure for cylindrical lids is as follows:

1. Allow one bolt for each inch of diameter of the lid flange. If the resulting number is not already a multiple of four, use the next larger number that is a multiple of four.

2. Divide the minimum bolt area, A_m, by the number of bolts determined in step 1; this gives the required area per bolt based on the root diameter of the bolt.

3. Select the bolt size. Because of the danger of overstressing small bolts, a 1/2-in.-diam bolt is considered the minimum size to be used. The shank diameter should be no greater than the root diameter of the thread. Impact strength should be considered in selecting the material of construction.

4. Apply Eq. (2.8) to determine whether the resulting bolt spacing is close enough to maintain adequate unit pressure on the gasket between the bolt holes.[6]

$$\text{Maximum bolt spacing} = [6t/(m + 0.5)] + 2a \ , \tag{2.8}$$

where

a = the major diameter of the bolts, in.,

t = the thickness of the lid flange, in.,

m = the gasket factor.

5. In an analysis of deformation and fracture of steel bolts, French engineers considered both plastic deformation and brittle fracture.[3] Since, under high strain rates, the outside of bolts undergo considerable plastic deformation while the center fractures, they concluded that it is better to employ a large number of small bolts, rather than a small number of large bolts, to maximize their total energy absorption capabilities. However, the total bolt area should not be less than determined in step 2 above.

Other bolting arrangements can be easily designed; however, they should be based on practical considerations such as those suggested in step 5, subject only to the requirements for the minimum total bolt area and maximum spacing.

A torque wrench should be used in bolting the cask lid. An approximate relationship between the torque applied to the bolt or nut and the force induced in the bolt or stud for unlubricated conditions is given by Eq. (2.9):[7]

$$T = 0.2aF, \tag{2.9}$$

where

T = torque, in.-lb,

a = the major diameter of the bolt, in.,

F = the induced force, lb.

The torque required to seal the gasket when all loadings are considered is calculated by Eq. (2.10):

$$T = \frac{0.2a\ (F_{oc} + F_w + F_p)}{N_B}, \qquad (2.10)$$

where

N_B = the number of bolts required.

2.4.3 Cask Closure Design

A schematic drawing of a shipping cask, which is typical of those designed for transporting radioactive materials, is shown in Fig. 1.1. Such designs have been impact tested[8,9] in the closure region; results indicate that movement of the cask closure relative to the body occurs frequently, destroying the seal (see Fig. 2.6).

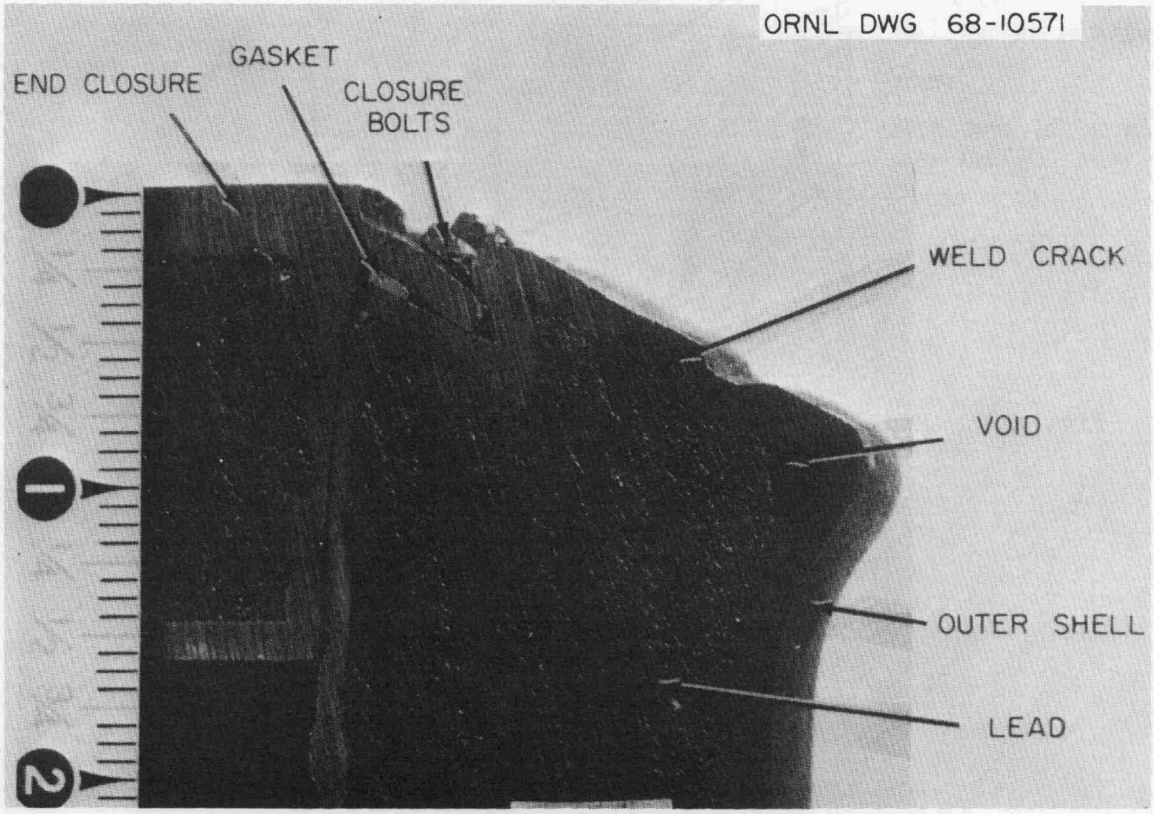

Fig. 2.6. Deformation of a Model Cask as the Result of a 30-ft Free Fall. (Courtesy of the University of Tennessee)

A practical solution to the relative movement problem for this design, as well as for other designs, is to buffer the vulnerable impact areas with energy-absorbing parts and to limit movement by the control of annular clearance between the lid and the cask. However, adequate clearance must be provided for ease of operation. For example, a closure, protected by the energy-absorbing fins is shown in Fig. 2.7.

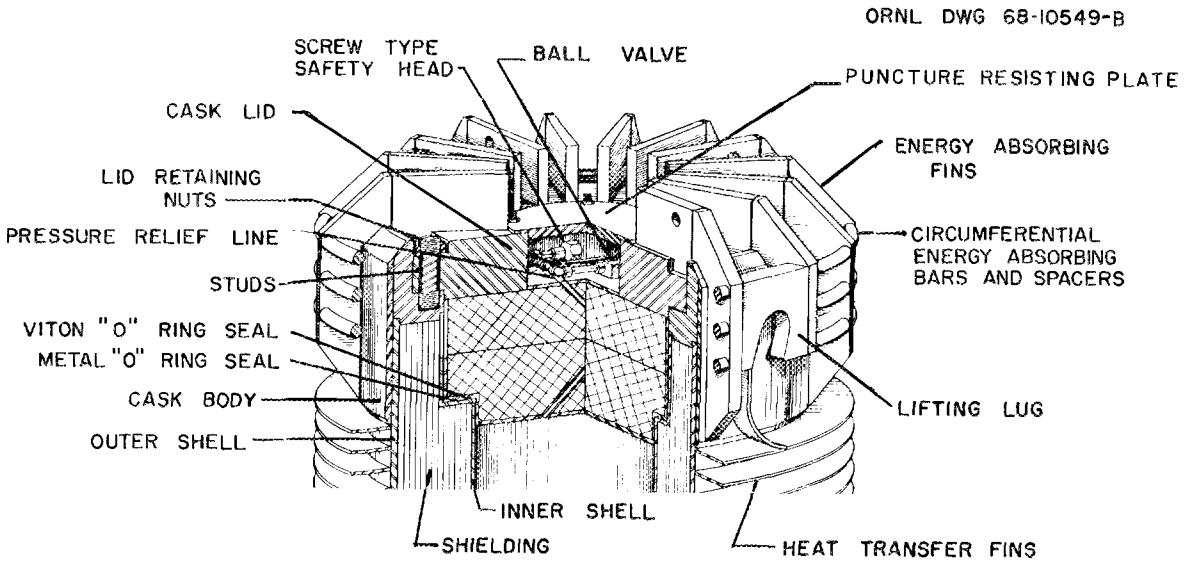

Fig. 2.7. Model Shipping Cask Protected by Energy Absorbing Fins.

A cask with protective fins[10] similar to those shown in Fig. 2.7 and weighing 372 lb was drop tested on its closure end from a height of 30 ft. The impact damage to the model was restricted to the fins and to one broken bolt in the lid (see Fig. 2.8). Removal of the lid and subsequent inspection revealed that less than 0.5 ml of water-soluble oil had leaked across the gasket seal, apparently at the moment of impact since the cavity was still capable of maintaining pressure after impact. Details of the drop and the protection offered by the energy-absorbing fins are discussed in Sect. 2.8.

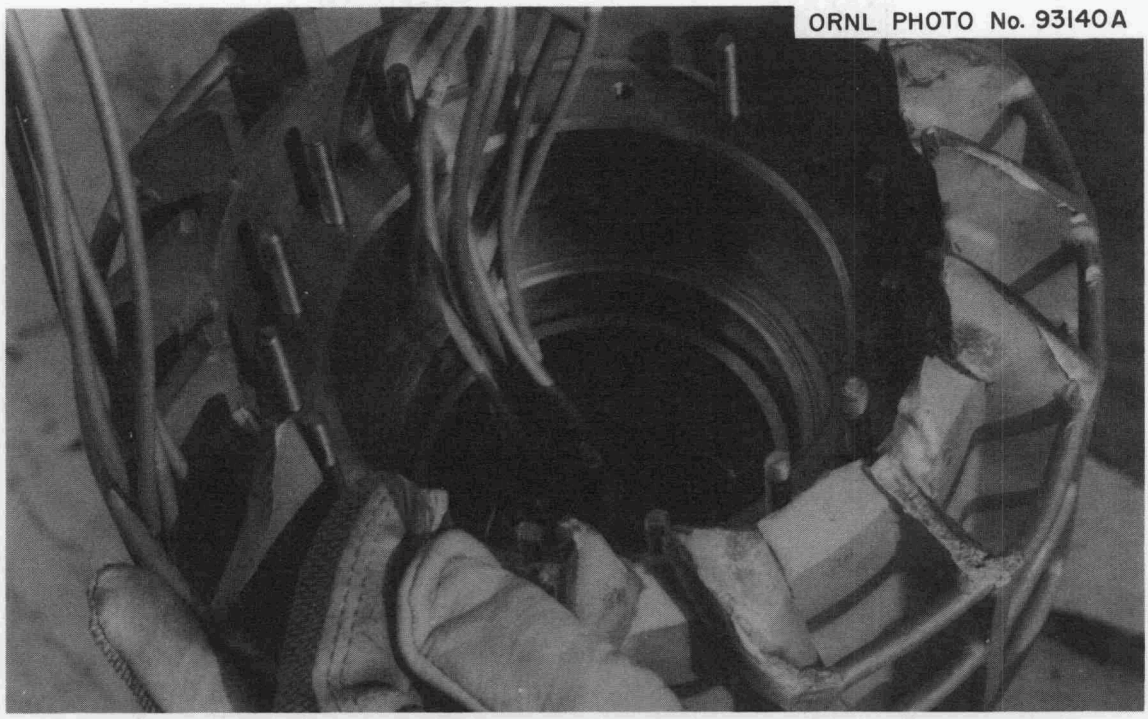

Fig. 2.8. Cask with Protective Fins After the 30-ft Closure End Drop Test. Lid has been removed. (Courtesy of Union Carbide Corp., Paducah Plant)

Figure 2.9 shows a closure design that is less vulnerable when exposed to impact than a design with plug and bolts.

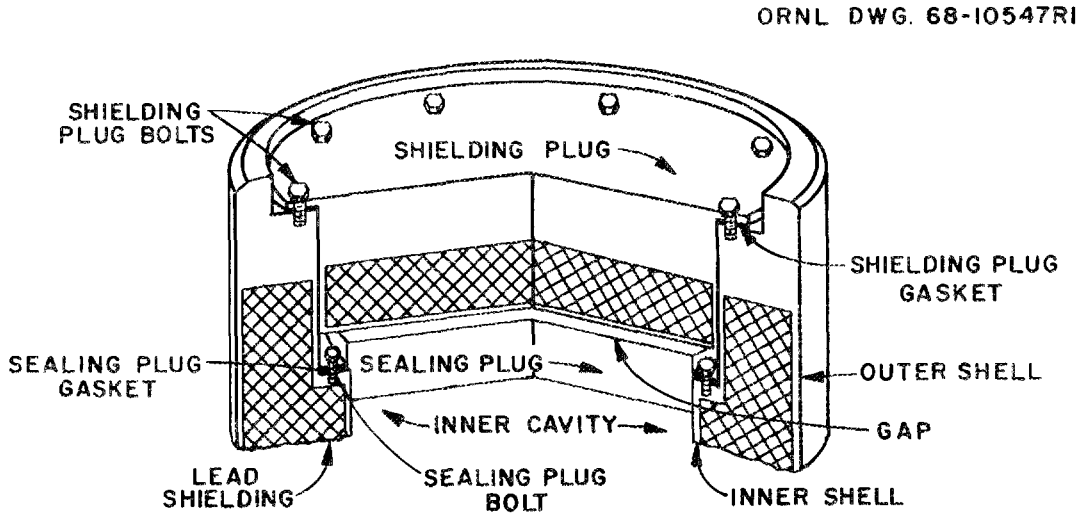

Fig. 2.9. Double Plug Closure for Cask.

This design is characterized by the separation of the shielding and sealing functions into two similar plug-type closures. It is expected that this design will survive an impact, provided that the shield plug does not directly contact (and therefore affect) the seal plug in an impact.

A closure design developed by the National Lead Corporation is unique in that the closure bolts are loaded in compression rather than tension (see Fig. 2.10). Of all the closure designs tested, it is felt that this one has the highest probability of retaining the shielding plug in position after an impact; however, the problem of maintaining a leakproof seal is complicated by the fact that the bolts are loaded in compression, shear, and bending. In addition, removing the plug after the accident may prove difficult.[10]

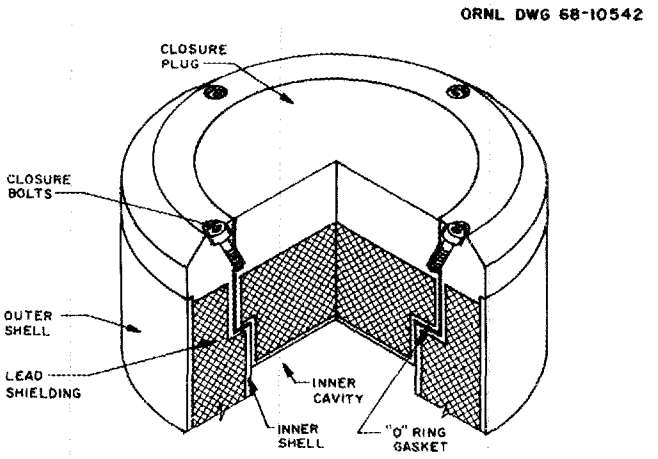

Fig. 2.10. Closure Design Developed by National Lead Corporation.

2.5 Lifting Devices

For purposes of this Guide, lifting devices are defined as items that are attached permanently to a shipping cask and serve to transmit the entire load to lifting equipment such as a crane. These devices are generally designed with the convenience and simplicity that would be required for remote handling (e.g., when a cask is handled underwater or in a shielded cell). Occasionally, lifting devices are used for tying down the cask. The performance standards required by AEC Manual 0529 are given below.

1. If the system of lifting devices is a structural part of the package, the system shall be capable of supporting three times the weight of the loaded package without generating stress in any material of the packaging in excess of its yield strength.

2. If the system of lifting devices is a structural part of the lid only, the system shall be capable of supporting three times the weight of the lid and any attachments without generating stress in any material of the lid in excess of its yield strength.

3. If there is a structural part of the package that could be employed to lift the package but does not comply with

1., above, this part shall be securely covered or locked during transport to prevent its use for that purpose.

4. If a lifting device is a structural part of the package, it shall be designed in such a manner that failure of the device under excessive load will not impair the containment or shielding properties of the package.

These requirements have been interpreted to mean that the lifting device may not suffer any significant permanent deformation when subjected to a force equal to three times the weight of the cask. However, this does not eliminate devices that may be subjected to local yielding over a small area, which may be caused by contact of the lifting device with lifting hooks, etc.

Many types of lifting devices may be designed to meet the regulations by relying on the "strength of materials" approach to engineering analysis. Providing a factor of safety greater than a factor of 3 (see above) to allow for the approximate nature of this method results in a reasonable balance between engineering effort and conservative design. Therefore, this is the definition of safety factor, as used in the Guide.

This approach may not be justified if the lifting device design is complex. In such cases the designer may rely on a more rigorous method based on elastic behavior. Discussions of such methods may be found in most of the basic "strength of materials" textbooks.

The following paragraphs present a brief description of four general lifting device designs. The detailed analyses of these configurations can be found in ref. 11.

Perhaps the most common design for a lifting device is a pair of short cantilever beams commonly called trunnions (see Fig. 2.11). This design has the advantage of simplicity of fabrication and, to some extent, simplicity of analysis.[46] Trunnions should be mounted in massive steel blocks, as suggested in Fig. 2.11; the base of each trunnion should be inserted in its socket to a depth of at least one trunnion diameter.

The weld between trunnion and flange should be designed for minimum concentration of stresses and should be sufficient to withstand the full-load capability of the trunnion.

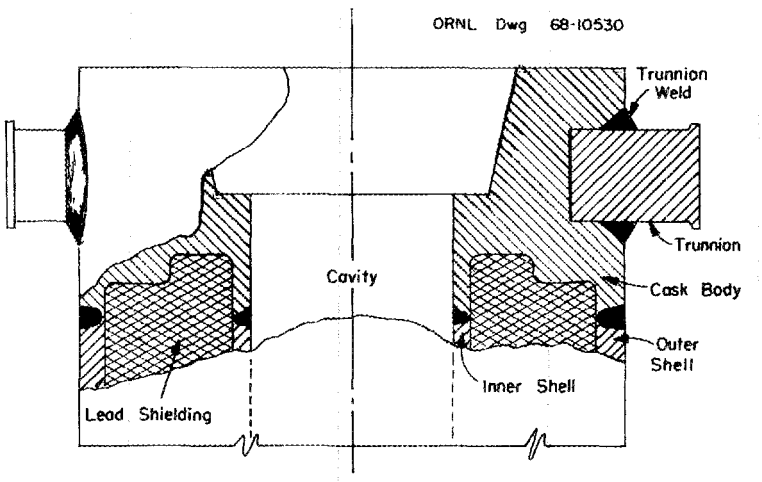

Fig. 2.11. Typical Cask Trunnions.

Trunnions welded onto the outer steel shell, as opposed to the massive block shown in Fig. 2.11, may be vulnerable to the punching action in a 30-ft impact. While penetration of the outer shell may not violate regulations, per se, a fire following such an impact might result in the leakage of lead and excessive radiation levels.

Occasionally, a strap that is attached to both the shell and the free end of the trunnion is used to minimize any flexing in the trunnion-to-flange-joint weld area. The length of the exposed trunnion should be no more than three trunnion diameters and should be designed only after consideration of the effects of both shear and bending stresses. For lifting systems of this type, a reasonable safety factor is 4.

A second type of common lifting device consists of "ears" with holes through which hooks may be placed for lifting. The ears are often placed vertically so that the weld is loaded entirely in shear (see Fig. 2.12). Although this device has been used advantageously on lightweight casks, it is not recommended for models weighing more than 10,000 lb.

ORNL Dwg 68-10540

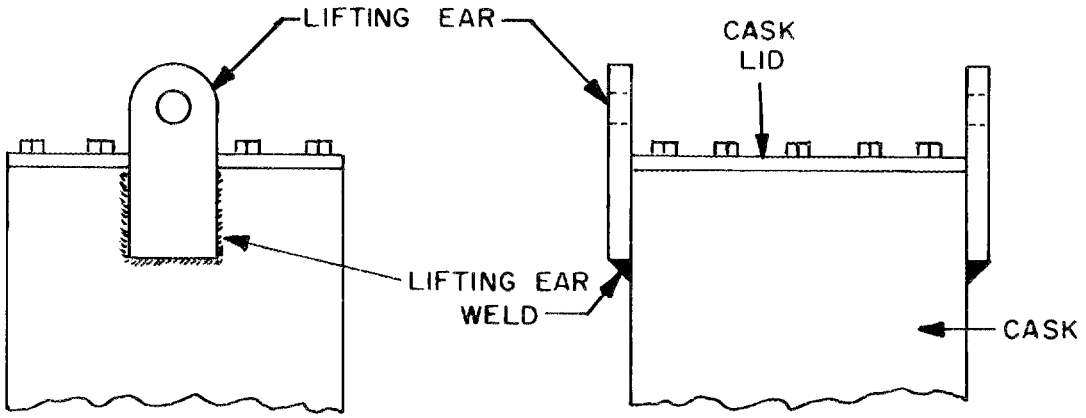

Fig. 2.12. Typical Cask Lifting Ears.

Lifting ears feature simplicity of fabrication and analysis and a minimum risk of puncture of the shell in the hypothetical accident. However, if the ears are particularly stiff, impact on the closure end could result in high-tensile loadings of the closure bolts.

For the design shown in Fig. 2.12, the thickness of the ear should be equal to, or greater than, the thickness of the outer shell. The diameter of the hole in the ear should be no more than one-half the width of the ear, and the amount of material above the hole should be equivalent to at least the diameter of the hole.

The length of the portion of the ear that is welded to the cask shell should be at least equal to the portion (containing the hole) that is not welded to the cask shell. The load-carrying capacity of the weld between the shell and the ear should be at least three times the loaded cask weight; and care must be taken not to overstress the metal surrounding the hole under load conditions. A reasonable factor of safety is 3.

A design that incorporates many of the features of the previous two designs is the mechanical inversion of the trunnion, which is called a lifting socket (see Fig. 2.13). A matching sling must be designed for lifting the cask.

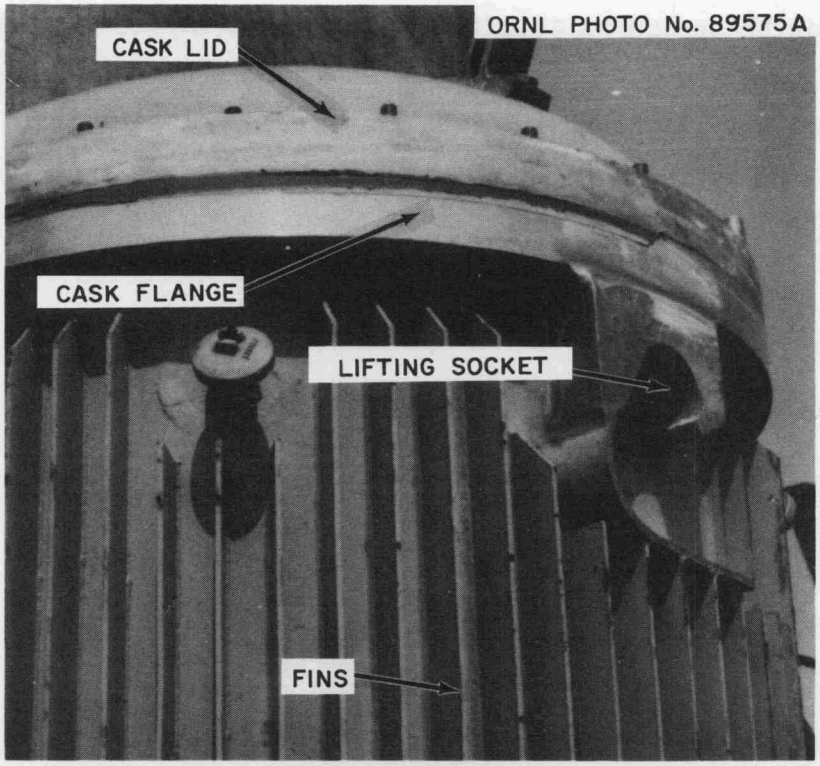

Fig. 2.13. Typical Cask Lifting Socket.

The socket-and-sling lifting device minimizes the potential effects of a 30-ft impact with respect to the puncture problem. Although its lifting capabilities are somewhat difficult to analyze and an elaborate sling is required, the advantage of minimizing impact effects makes the design desirable. Experience with this design indicates that the mating and complete engagement of socket and sling by remote means may be difficult to achieve. If engagement is not achieved, the socket may be damaged.

Welds are the key to a proper socket design. The socket is usually a massive machined piece whose thickness is about one diameter of the pin used in the sling. As a result, it is usually stronger than the welds. Although the socket may be located beneath a flange (as shown in Fig. 2.13), the socket welds should be capable of carrying the design load. Analysis is somewhat complicated since an eccentric loading caused by the lifting sling produces torsion in the weld pattern. A safety factor of 3 is reasonable for this design.

The fourth design is a lifting device that may be thought of as a continuous ring made up of lifting ears welded around the top of the cask (see Fig. 2.14). Although this design is somewhat similar to that of single lifting ears, the analysis is more detailed.[11] Therefore, a safety factor of 2 is considered sufficient.

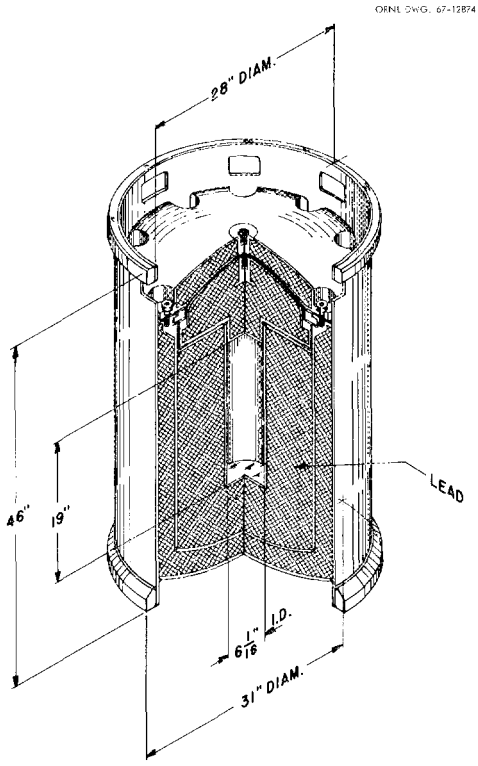

Fig. 2.14. Cask Using Continuous-Ring Lifting Device.

2.6 Tie-Downs

2.6.1 General Considerations

The tie-down is a device defined in the regulations as that portion of the system which is rigidly attached to the cask. The tie-down system, including the tie-down device, is used to maintain a controlled geometric relationship between a cask and the transporting vehicle. Such systems are usually designed to facilitate rapid loading and unloading of cargo. This Guide considers the analysis of the complete tie-down system.

The performance requirements for tie-down devices are as follows:

1. "If there is a system of tie-down devices which is a structural part of the cask, it shall be capable of withstanding, without generating stress in any material of the cask in excess of its yield strength, a static force applied at the center of gravity of the package having a vertical component of two times the weight of the cask, with its contents, a horizontal component along the direction in which the vehicle travels of ten times the weight of the cask with its contents, and a horizontal component in the transverse direction of five times the weight of the cask with its contents.

2. "Also if there is a structural part of the cask which could be employed to tie the package down and which does not comply with the above paragraph, that part shall be securely covered or locked during transport in such a manner as to prevent its use for that purpose.

3. "Each tie-down device which is a structural part of the package shall be so designed that failure of the device under excessive load would not impair the ability of the device to meet other requirements of the regulations."

Since the prevention of localized yielding in small areas due to contact stresses is virtually impossible under normal usage, these requirements are interpreted to mean that the tie-down must be able to withstand the prescribed loading without suffering any significant permanent deformation.

The designer often has control over the entire tie-down system until the system is ready to be attached to the vehicle. At this point, he must rely upon other personnel to perform the attachment operation properly. This necessity of depending on others can cause significant problems since it is important to maintain control of the cask-vehicle system and thus avoid possible loss of cargo or vehicle instability. Accordingly, the designer should make every effort to eliminate field judgment by personnel securing the cask onto the transport vehicle.

The Savannah River Plant, in considering the design and analysis of that portion of the tie-down system which is not rigidly attached to the casks, currently uses 2 g tie-down strength in all 3 directions for truck transport and 2 g transversely, 2 g vertically, and 10 g longitudinally for rail transport.[45] This design philosophy is recommended as being reasonable for the commercial transport systems that are presently available.

The most commonly used tie-down is the one in which the cask is rigidly fastened to the vehicle during normal operating conditions and is expected to remain with the vehicle under accident conditions. In general, such tie-downs have proved adequate for shipments in the past.

If a cask is surrounded by a shock-absorbing buffer, the tie-downs may be designed as a weak link. This philosophy was employed in the design of the HAPO 1B cask series. Since the buffer that is attached to this cask is designed to reduce the deceleration to which the cask will be subject, the tie-downs are designed to break with a severe shock (at about 12 g), allowing both the cask and the buffer to roll free; this is intended to reduce the chance of the cask being crushed by the colliding railcars. The buffered cask with its tie-down is shown in Fig. 2.15; the cask itself is discussed in Sect. 2.8.

In general, casks that have been designed for shipment on a special vehicle can have their tie-down systems designed to provide the necessary strength and energy absorption capability. This is more difficult to provide in the case of smaller casks that are transported by a variety of common carriers.

The American National Standards Institute (ANSI) subcommittee N 14-2 expects to publish, in the near future, a compendium of tie-down methods that are in use today. In addition, the Oak Ridge National Laboratory is considering various methods for the analysis of common tie-down designs under the prescribed static loading.

A computer program to perform analyses of tie-down under static loading conditions has been developed by the Sandia Corporation and is discussed in ref. 12. This program considers the sliding mode of displacement only.

Franklin Institute has developed a method of tie-down analysis that is based on idealized dynamic conditions. Their method is primarily useful for comparing materials used in tie-down systems.[13]

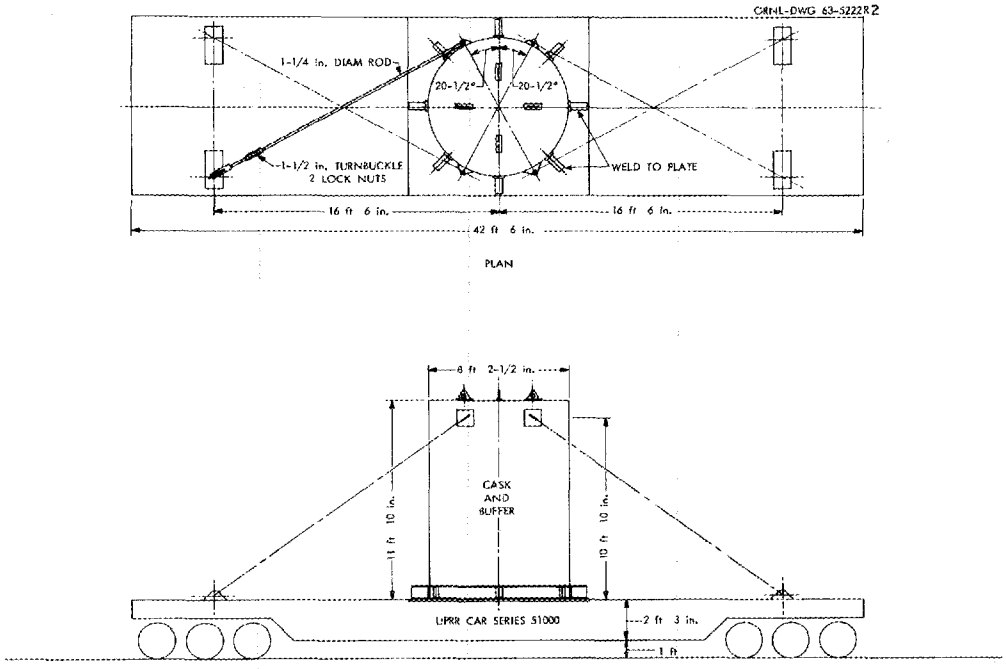

Fig. 2.15. Tie-Down of the HAPO1B Buffered Cask to Railroad Car.

2.6.2 Tie-Down Methods

Spent fuel carriers weighing less than 10,000 lb may be readily transported by truck or rail. If the cask weighs greater than 500 lb, some means must be provided to limit the floor loading to less than 500 lb/ft^2. A skid or load spreader under the cask will serve this purpose. Acceptable tie-downs for casks in this category are shown in Figs. 2.16 and 2.17. The bottoms of these casks are often held in place by wooden chocks that are nailed to the floor of the vehicle. Routine inspection should ensure that these chocks are adequate and provide reasonable support during transit. Members of the tie-down system are usually cables or chains; however, in certain cases, solid steel struts have been used to obtain a fully rigid system (see Fig. 2.18). Cables are preferred

over chains because of their elastic behavior beyond "yield point" loading (a desirable characteristic not available in chains). Recommended cables consist of 5/8-in. (minimum) plow steel wire rope fastened to itself with at least three Crosby clamps at either end (see Fig. 2.17).

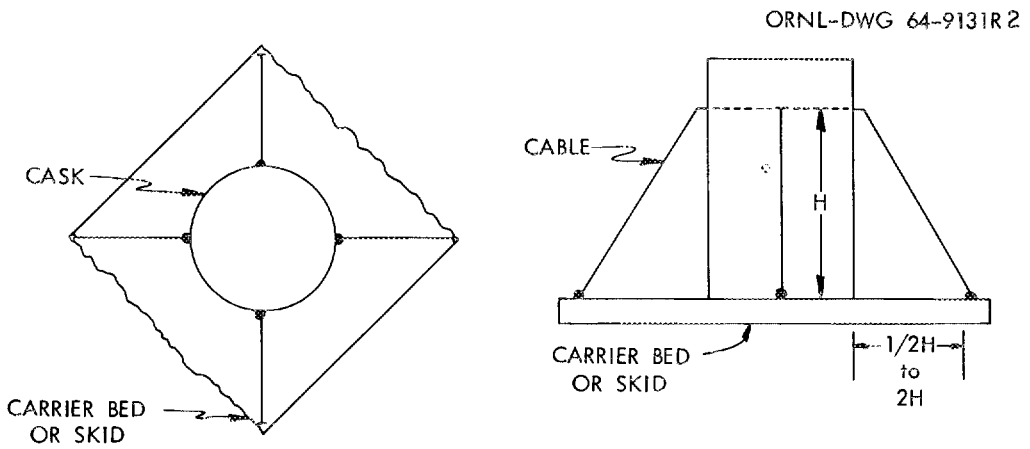

A. Four-Way Tie-Down for Heavy Containers.

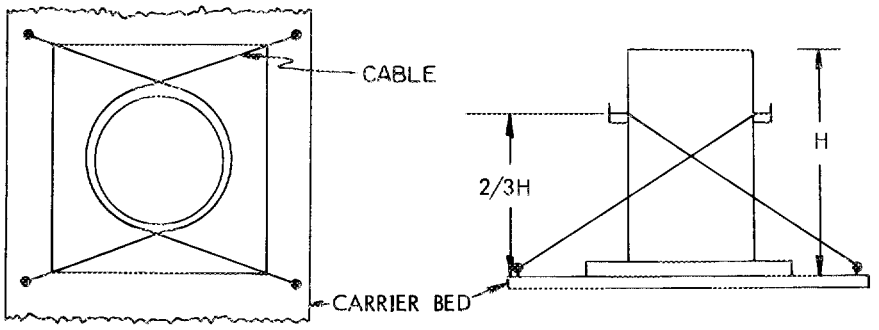

B. A Basket Hitch Tie-Down for Light Containers.

Fig. 2.16. Two Typical Tie-Down Systems.

Shipment by rail or barge appears to be the best method for transporting casks that weigh more than 50,000 lb; however, rail transport is much more prevalent. Tie-downs for such heavy casks are often designed for the specific cask and vehicle. A saddle, with steel holddown straps

attached by means of bolts (see Fig. 2.19), may surmount the skid. The number of bolts required to withstand the 2, 5, and 10 g tie-down loadings may be calculated, based on a static loading, as discussed in Sect. 2.6.3.

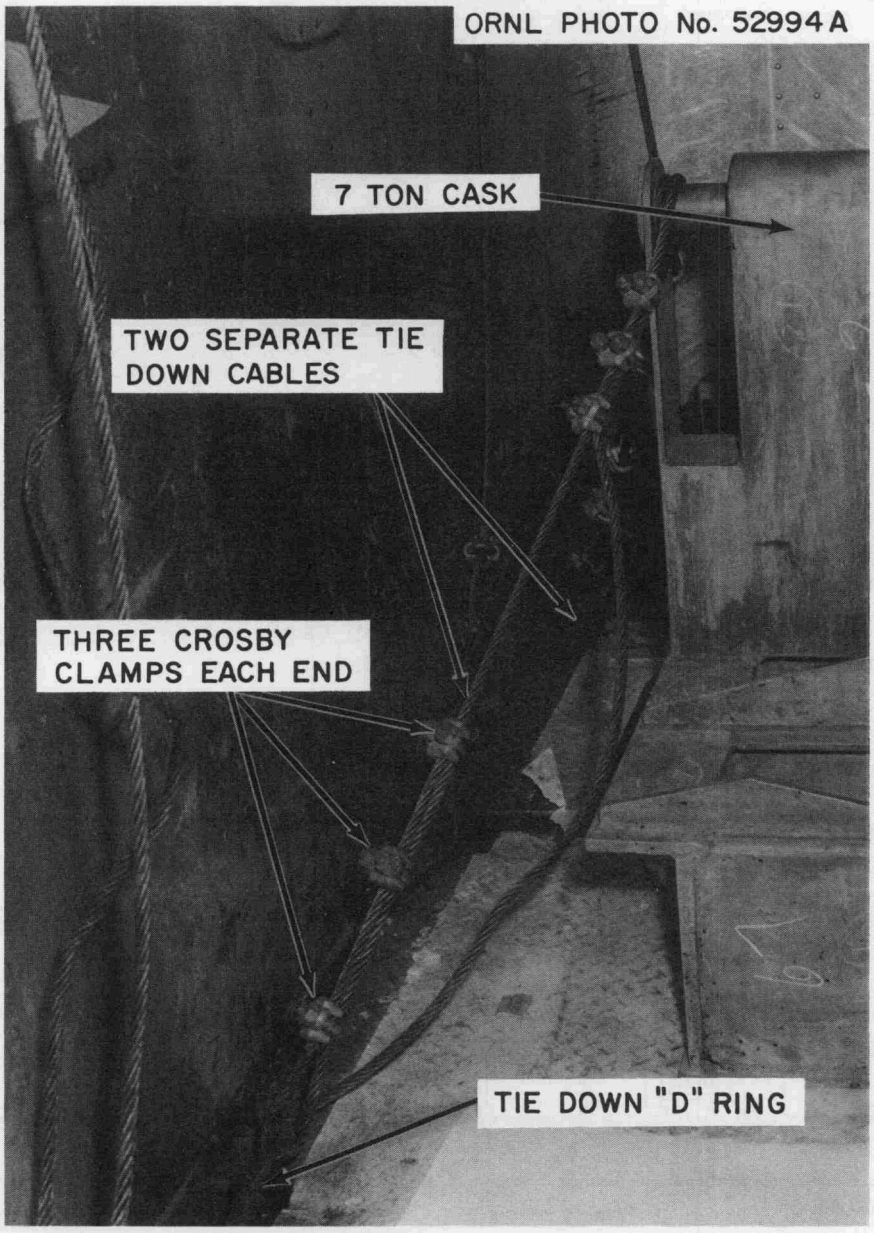

Fig. 2.17. A Four-Way Tie-Down on a 7-Ton Cask.

ORNL PHOTO No. 93199 A

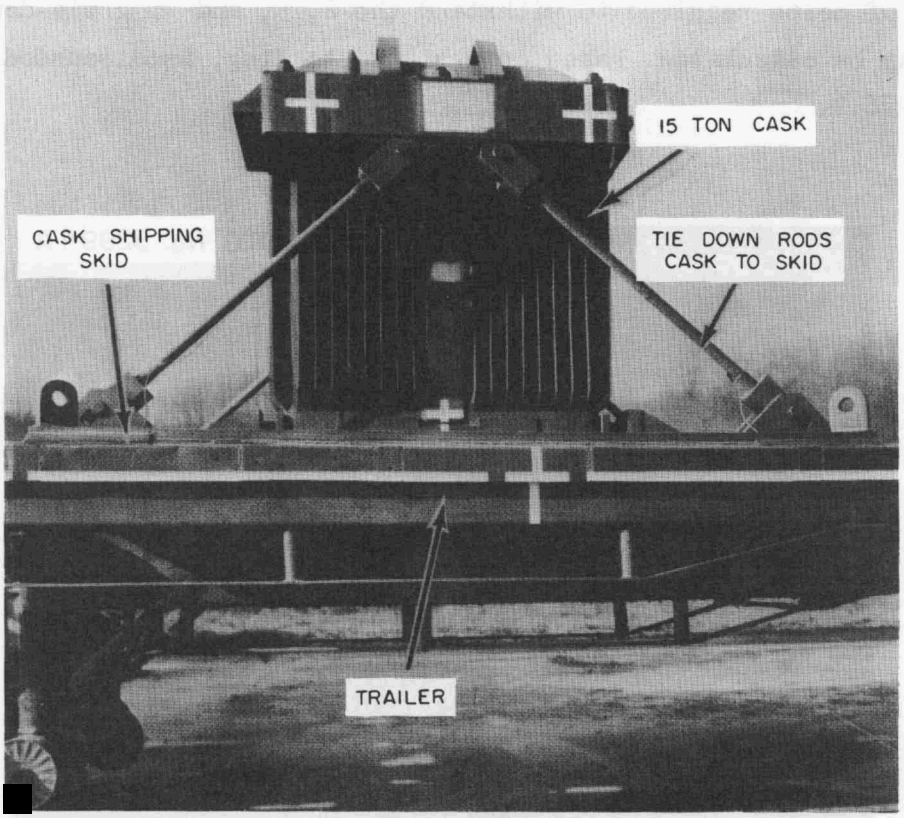

Fig. 2.18. Tie-Down of a 15-Ton Cask and Skid to Trailer. (Courtesy of Aberdeen Proving Grounds)

ORNL Dwg. 68-10533

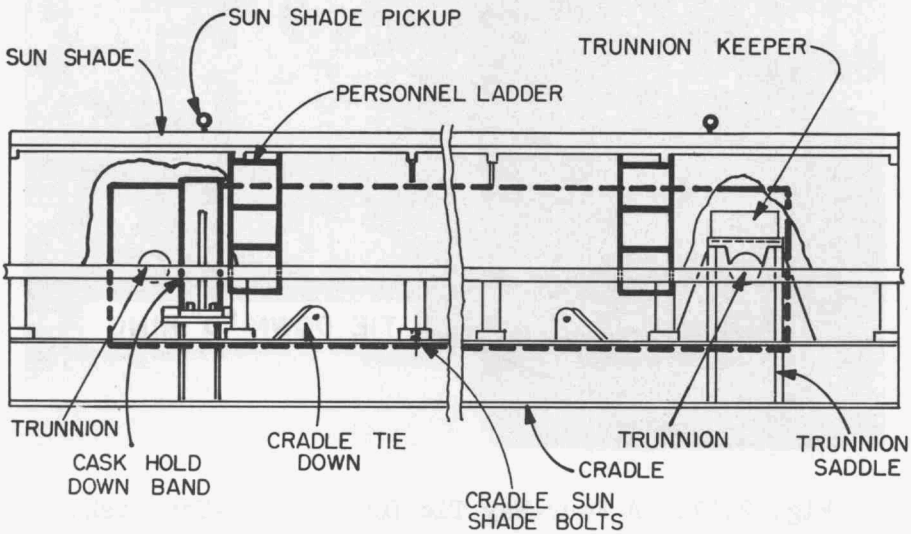

Fig. 2.19. HNPF Six-Element Fuel Shipping Cask Tie-Downs.

2.6.3 Methods of Analysis

Tie-down systems may be analyzed by using approximate methods of engineering analysis. These methods will not yield exact results as compared with strain gage measurements; nevertheless, tie-down systems designed by using these methods have proved to be adequate. A recent publication of design equations with derivations may be found in ref. 38.

Dynamic loadings, such as might occur in an accident, are not easy to analyze. The behavior of a system of elastic/plastic elements under dynamic loading condition has been under study for a number of years by various workers. Recent work is based on dividing the structure into a number of finite elements and then using the proper descriptive differential equations, converted to finite difference equations, to carry out a solution using numerical integration. A discussion of this technique may be found elsewhere.[14] A direct application of this method is found in ref. 15.

2.7 Effects of a 30-ft Impact on Lead Shielding

Lead shielding can be lost in an impact in two ways: (1) An outer surface of the cask can be flattened, thereby causing the lead to shift to other areas; thus less shielding would remain in the area of the impact. (2) If an end impact occurs, lead movement may occur at the opposite end of the cask, creating a void space. This section presents analytical procedures and test results that will allow the cask designer to estimate the extent of the loss of shielding which occurs in either of these two ways.

In analyzing the behavior of cask systems under impact conditions, two relationships will be helpful in estimating deformations and g loadings. The first is that for a constant impact force, which implies a constant deceleration rate; in this instance, the g loading can be calculated by dividing the drop height by the stopping distance. When the force is a linear function of the displacement, or stopping distance, the g loading is twice the drop height divided by the stopping distance. These methods will give minimum estimates of g loading and are, therefore, not conservative. They do, however, provide reasonable estimates used in predicting damage.

2.7.1 Material Properties Under Impact Conditions

The kinetic energy of a cask during an impact must be dissipated either in the cask or its environment. Since regulations stipulate that the impact surface must be unyielding, essentially all the energy must be absorbed by elastic and inelastic deformation of material that may or may not be a part of the cask. The properties of the material under dynamic conditions must, therefore, be known in order to evaluate the effect of impact on the cask.

For steel, tests indicate that at strain rates expected in a 30-ft impact the dynamic yield point is only slightly greater than the static yield point.[16] It is, therefore, recommended that the static yield point stress be used to determine inelastic deformations in steel components of the cask.

The behavior of lead under impact conditions has been studied by a number of workers; however, since the dynamic properties of lead are affected by strain rate, impurities in the lead, and other variables, results do not often agree. The mechanical properties determined under static conditions are given in Table 2.4.[17]

Table 2.4. Mechanical Properties of Cast Lead

Modulus of elasticity	2×10^6
Poisson's ratio	0.40 to 0.45
Tensile strength	2300-2800 psi
% ultimate elongation	Approx. 33%
Brinell hardness No.	4.0-6.0

Strain rate affects the relationship between stress and strain. In principle, once the relationship between these properties is known, the damage suffered in any given impact may be predicted by using methods of

continuum mechanics. In practice, closed-form solutions to the impact problem are few; and results, using realistic physical models and measured dynamic properties, have been less than satisfactory.

Accepting the limitations of less rigorous methods, dynamic behavior can be related to a pseudo material property called the "dynamic flow pressure." This pressure is defined as the energy that is necessary to displace a unit volume of material; dimensions are in.-lb/in.^{3} or psi. The dynamic flow pressure relates the absorbed energy directly to the final displacement without resorting to laborious numerical methods. Results of the few problems analyzed using the dynamic flow pressure concept have been acceptable when applied to composite structures and excellent when applied to homogeneous bodies. Two examples of this form of analysis as applied to composite structures are discussed in Sects. 2.7.2 and 2.7.3.

The dynamic flow pressure of common plumber's lead, as measured by J. H. Vincent,[18] was found to be between 3700 and 18,850 psi; the magnitude of this range was attributed to variations in the crystal size or orientation, and possibly to material impurities. J. P. Andrews[19,20] found that, in testing lead spheres, the relationship between impact energy and displaced volume of the sphere was a straight line in the range of velocities investigated. In a study of impact of spheres on rigid plates, Clarke[21] presents a nondimensional strain factor as a function of impact velocity; this factor may be readily converted to a dynamic flow pressure of 8500 psi by using his definition of average radial strain. However, assuming a Brinell hardness No. of 4.0, the dynamic flow pressure (based on very low strain rates) has been calculated to be 5900 psi.

These data indicate that lead tends to resist deformation under dynamic conditions more than under equivalent static conditions and that the energy required to displace 1 in.^{3} of lead is about two to three times the static compressive yield strength, as stated in ref. 22. This conclusion is in agreement with information presented in refs. 8 and 23, where penetration tests using cylindrical punches are reported; results indicate a value of 10,300 psi for the dynamic flow pressure.

From the above data it is clear that the dynamic flow pressure of lead depends upon test specimen configuration, strain rate, and method of correlation. However, for engineering purposes, a value of 5000 psi appears to be both reasonable and conservative with regard to estimating shield deformation; therefore, it is recommended for calculational purposes unless the designers can justify a higher value. A value of 10,000 psi appears to be reasonable for the purpose of estimating maximum deceleration loading.

2.7.2 Analysis of a Horizontal-Axis Impact of a Cylindrical Cask Without Fins

When cylindrical casks with flat end plates and no external energy absorbers are dropped in such a manner that their longitudinal axes are horizontal, they will absorb energy upon impact mainly in three ways: (1) by deformation of the end plates, (2) movement of lead, and (3) deformation of the cylindrical outer shell. A relatively small amount of energy is absorbed in bending the steel shell at the point of impact and is, therefore, neglected in this analysis.

Assuming the cask to be a long cylinder without an internal cavity, the energy absorbed in the deformation of the steel ends and of the lead may be calculated from Eqs. [2.11(a)] and [2.11(b)], respectively.

$$E_e = R^2 t_e \sigma_s (\theta - \frac{1}{2} \sin 2\theta) \tag{2.11a}$$

$$E_{Pb} = R^2 L \sigma_{Pb} (\theta - \frac{1}{2} \sin 2\theta) , \tag{2.11b}$$

where

E = energy absorbed in the lead or steel ends, in.-lb,

R = the outer radius, in.,

L = the cylinder length, in.,

t_e = thickness of the steel end plate, in.,

σ_s = the dynamic flow stress in steel, lb/in.^{2}

σ_{Pb} = the dynamic flow stress in lead, lb/in.^{2}

θ = the angle defined in Fig. 2.20, deg., or radians.

ORNL Dwg 68-10537

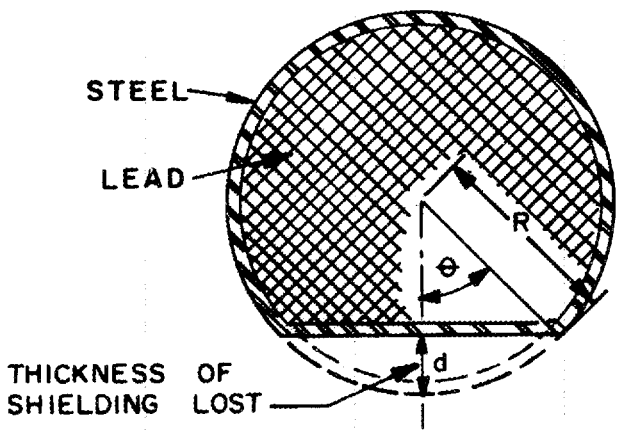

Fig. 2.20. End View of the Deformation in a Steel-Encased Solid Lead Cylinder.

Assuming uniform strain, the energy absorbed by the deformation of the outer shell of the cask (due to movement of lead), E_{os}, may be estimated from

$$E_{os} = Rt_S L\sigma_S \left[\sin\theta(2 - \cos\theta) - \theta\right], \tag{2.12}$$

where

R = the outer shell radius, in.,

t_S = the outer shell thickness, in.,

L = the length of the shell, in.,

σ_S = the dynamic flow stress of the shell, psi.

Combining and rearranging Eqs. [2.11(a)], [2.11(b)], and (2.12) leads to Eq. (2.13):

$$\frac{WH}{t_S RL\sigma_S} = \left[F_1(\theta)\right]\left[\frac{R}{t_S}(\sigma_{Pb}/\sigma_S) + 2(R/L)(t_e/t_S)\right] + F_2(\theta), \tag{2.13}$$

where

W = cask weight, lb,

H = drop height, in.,

$F_1(\theta) = \theta - \frac{1}{2} \sin 2\theta$,

$F_2(\theta) = \sin \theta(2 - \cos \theta) - \theta$.

Equation (2.13) is based on the assumptions that the yield point stress of the steel end piece is the same as that of the shell and that the end pieces are of equal thickness.

In order to use Eqs. [2.11(a)], [2.11(b)], and (2.12), the angle θ and the cask geometry must be known. The angle θ may be determined from Fig. 2.21, which is based on Eq. (2.13). The maximum loss of shielding represented by the outer shell flattening, d, may be calculated by $d = R(1 - \cos \theta)$.

Example. — A 1.3-ton cask, shown schematically in Fig. 2.22, was dropped 15 and 29 ft in a horizontal attitude. Results of the deformation produced after the first drop only are reported in ref. 5. Using Eq. (2.13), the expected deformation is predicted and compared with the actual results.

The geometry and properties of the materials of the cask are given below:

W = 2600 lb,

H = 180 in.,

t_S = 0.31 in.,

R = 9.0 in.,

L = 36.0 in.,

σ_S = 50,000 psi,

t_e = 0.5 in.,

σ_{Pb} = 5000 psi.

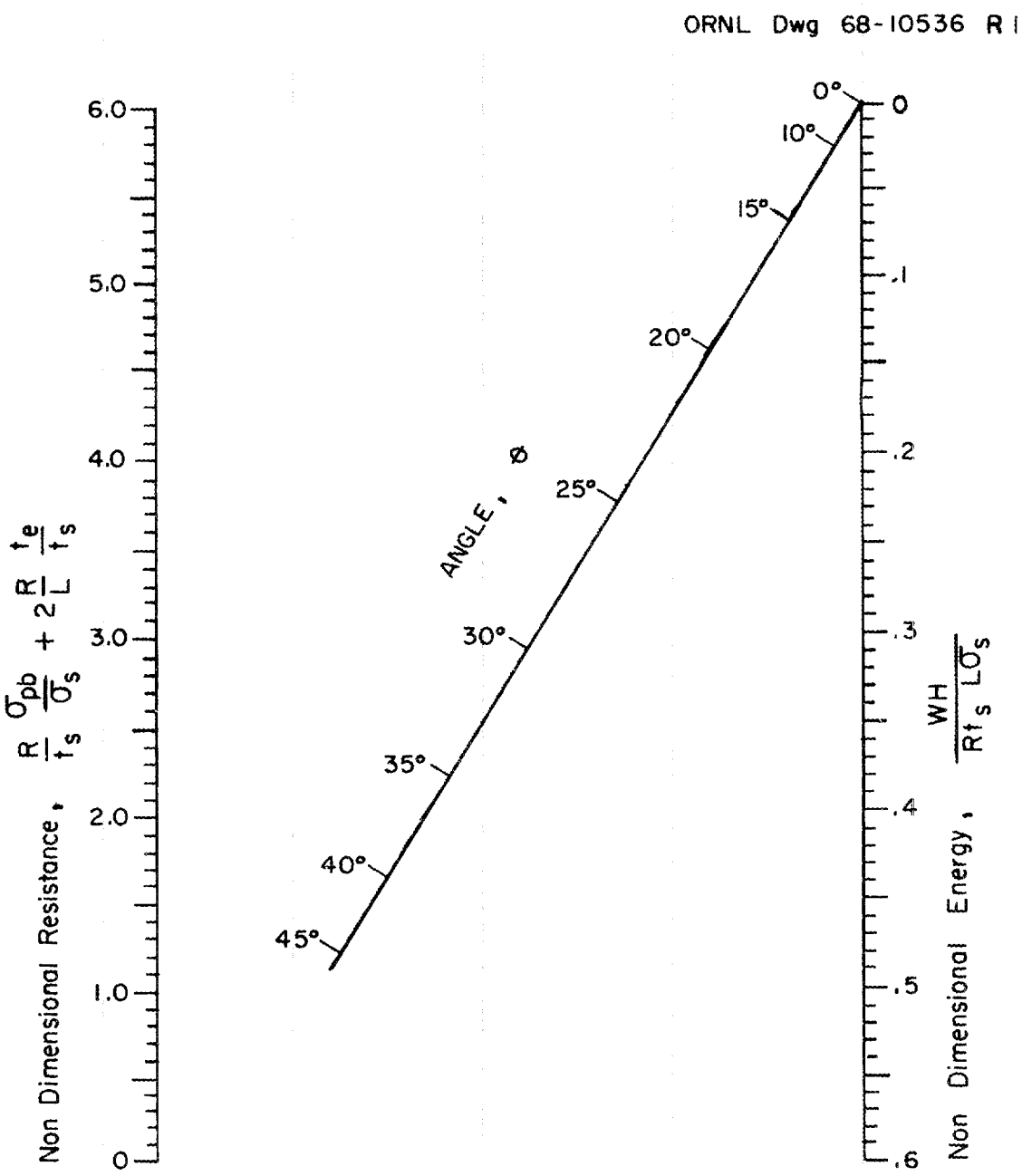

Fig. 2.21. Nomograph for Determining Half Angle of Flat Developed (θ) Due to Impact of a Cylindrical Cask with Axis Horizontal.

ORNL DWG. 63-3592-A

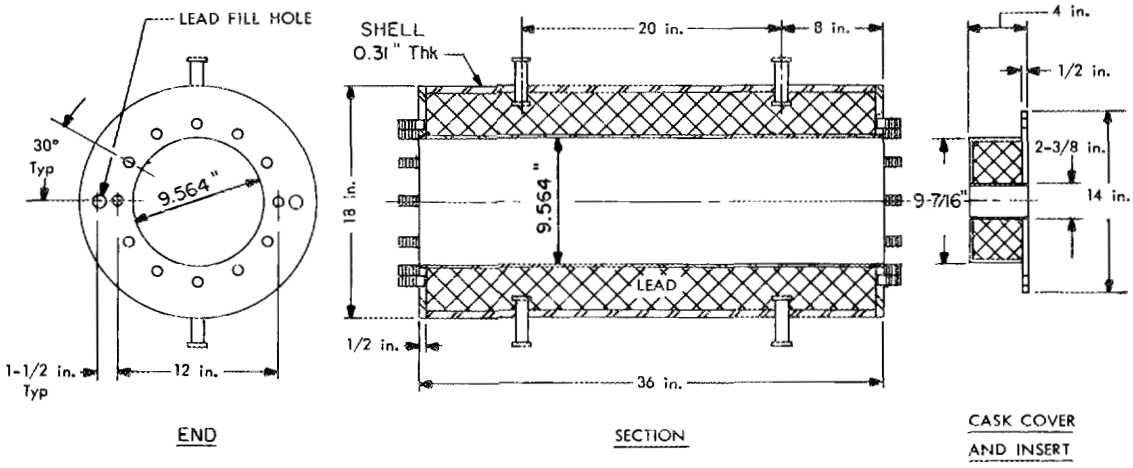

Fig. 2.22. 1.3-Ton Test Cask.

Computing the parameters given in Eq. (2.13),

$$\frac{R\sigma_{Pb}}{t_S\sigma_S} + \frac{2Rt_e}{Lt_S} = 3.70, \text{ and } \frac{WH}{t_S RL\sigma_S} = 0.09319.$$

From Fig. 2.21, the angle θ is predicted to be 18°, and the maximum reduction in shielding, d, is (9 in.) [1 - cos(18°)] = 0.405 in.

The test data in ref. 5 indicate that the average width of the developed flat is 3.53 in., for which the average half angle is 11°19'. The maximum width was determined to be 5.25 in., for which the half angle is 16°57' (i.e., very near the predicted angle of 18°).

The approximate distribution of absorbed energies for this drop, based on Eqs. [2.11(a)], [2.11(b)], (2.12), and (2.13), is:

Cask Part	Energy Absorbed (%)
Lead	76
Shell	13
End plates	11

These values are in good agreement with those of the detailed analysis based on brittle coating and strain gage measurements presented in ref. 5.

2.7.3 Analysis of an End Impact of a Cylindrical Cask Having Nonbuffered Ends

An end drop of a cask in which the lead is not bonded to the steel shell will cause the lead to settle, thus creating a void in the end opposite the point of impact. An analysis of such an impact, based on the energy absorbed by the lead (as a result of its deformation) and by the outer steel shell (as a result of its circumferential strain from internal lead pressure) has been made.[23]

The change in the lead volume in an impact may be estimated from Eq. (2.14):

$$\Delta V = \frac{RWH}{t_S\sigma_S + R\sigma_{Pb}} \tag{2.14}$$

For negligible changes in the outer radius of lead, R, and the inner radius of lead, r, the change in the height of the lead column, ΔH, is

$$\Delta H = \frac{\Delta V}{\pi(R^2 - r^2)} \tag{2.15}$$

Combining Eqs. (2.14) and (2.15) yields

$$\Delta H = \frac{RWH}{\pi(R^2 - r^2)(t_S\sigma_S + R\sigma_{Pb})} \ . \tag{2.16}$$

As noted before, Eq. (2.16) is based on an unbonded lead condition since neither the support provided by the steel shells nor the possibility of collapse of the inner shell by buckling is taken into account.

Example. — A model shipping cask (Fig. 2.23) was designed and built to investigate the movement of lead in an end impact. Care was taken to prevent the lead from becoming bonded to the steel shells. The cask was dropped 30 ft onto its bottom end. Pertinent data of the cask are as follows:

$W = 163$ lb,

$H = 30$ ft or 360 in.,

$R = 2.248$ in.,

$r = 1.3125$ in.,

t_S = 0.20 in.,

σ_S = 45,000 psi

σ_{Pb} = 5000 psi.

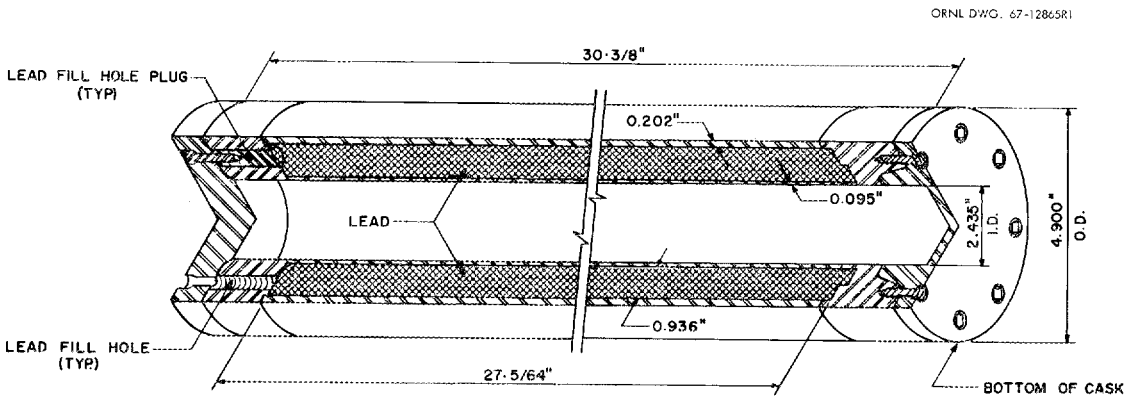

Fig. 2.23. ORNL-Constructed 1:7.5 Model of Hallam Six-Element Shipping Cask (HNPF).

The change in the height of the lead column inside the weldment can be estimated from Eq. (2.16) as follows:

$$\Delta H = \frac{(2.25)(163)(360)}{\pi[(2.25)^2 - (1.31)^2]\,[(0.20)(45{,}000) + (2.25)(5000)]}$$

$$= 0.62 \text{ in.}$$

Experimental data indicated that the height of lead actually changed 0.7 in., which is in reasonable agreement with the height predicted above.

2.8 Shock Absorbing Structures

Often it is desirable to protect a cask from direct impact by surrounding it with a shock-absorbing structure. In an accident the structure will deform and absorb energy that might otherwise cause damage in the cask itself or to the contained spent fuel. It is particularly important to protect cask closures from deformation (see Sect. 2.4.3).

2.8.1 Fins

Several types of protective structures have been designed and built. Probably the simplest and least expensive of these are fins that are welded directly onto the cask. Fins are often necessary for heat removal, but their usefulness as shock absorbers should not be overlooked.

Analytical techniques for predicting the amount of energy that can be absorbed during the deformation of fins of various configurations have not been fully developed; however, if the fins are pre-bent in such a manner that their movement in an accident can be predicted with confidence, the energy that they absorb can be estimated by treating each fin as a plastic hinge. The energy absorbed by a pre-bent fin will be less than that absorbed by a straight fin. Accordingly, for a steel- or uranium-shielded cask it may not be desirable to use pre-bent fins. However, in the case of lead-shielded casks, the more rigid straight fins could result in damage to the shielding.

As a part of a larger study program, a model uranium-shielded cask weighing 372 lb was built with 1/4-in.-thick fins extending approximately 1 in. above the closure. This cask was dropped 30 ft onto an edge.[10] The protection afforded by fins is illustrated in Fig. 2.24.

Two accelerometers were placed – one on the top and one on the bottom of the cavity – at an angle normal to the impact surface. Both registered a force of approximately 1100 g's; the peak lasted for approximately 0.001 sec.

The closure (see Fig. 2.8) was apparently well protected since no dimensional changes to the lid and its mating parts were observed after the impact.

The full-size demonstration fuel element shipping cask, designed with protective fins, was also drop tested from 30 ft onto a top edge.[24] It was equipped with both elastomer and stainless steel gaskets. The cavity was pressurized to approximately 165 psi before the drop; no evidence of leakage after the drop was noted.

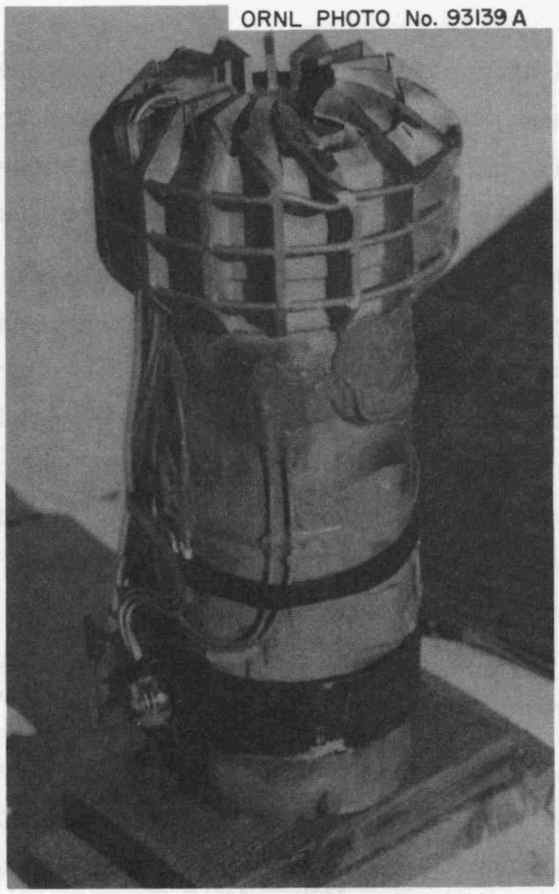

Fig. 2.24. Model Uranium-Shielded Cask After 30-Ft Drop. (Courtesy of Union Carbide Corp., Paducah Plant)

2.8.2 Toroidal Shell-Type Energy Absorbers

The amount of energy that can be absorbed by fins is dependent on the orientation of fins relative to the direction of cask impact. Shell structures, such as the segmented toroidal ring shown in Fig. 2.25, can be designed to circumvent this problem. This ring is designed not only to protect the cask closure in an end drop but will also operate properly regardless of the angle at which the cask impacts on a horizontal surface.

Protective devices of this design are being tested at the University of Tennessee. Results have shown that such rings can supply the energy absorption capabilities necessary to maintain seal integrity and permit closure after a 30-ft impact for cask weights of interest.[25,39] This work is being pursued further in an attempt to accumulate engineering

data that will permit the design of a toroidal ring of predictable energy absorption capacity as would be required in a specific use. Preliminary data indicate that, for straight circular cylinders of mild steel, the energy absorption characteristics in a crushing impact are correlated by Eq. (2.17).

$$E = \frac{S_y t^2 L}{R} \left[\Delta + 0.4 \frac{\Delta^2}{R}\right] , \qquad (2.17)$$

where

E is the energy absorbed in in.-lb,

S_y is the uniaxial yield strength of the steel in psi,

t is the cylinder thickness in in.,

L is the cylinder length in in.,

R is the mean radius of the cylinder, in.,

Δ is the deformation shown in Fig. 2.26 in in.

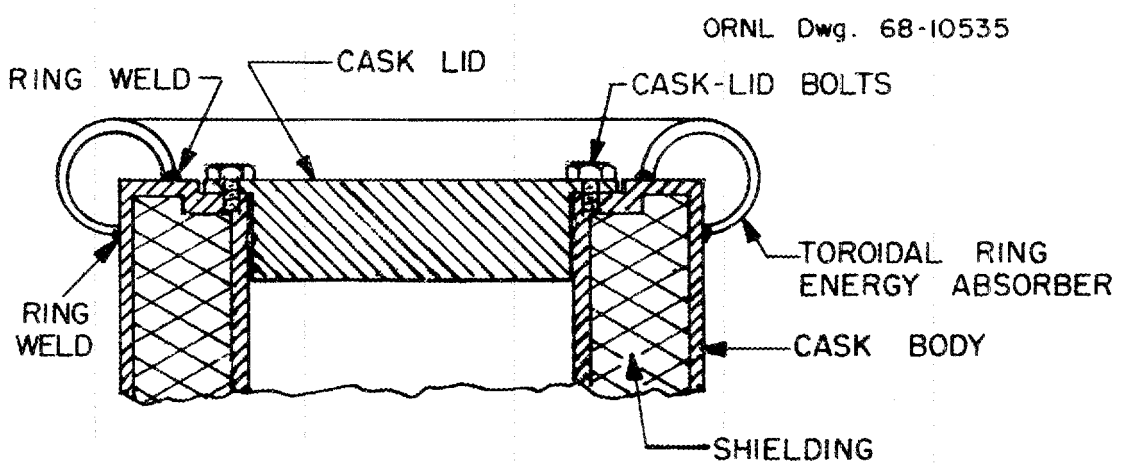

Fig. 2.25. Toroidal-Ring Energy Absorber.

ORNL-DWG-69-8422

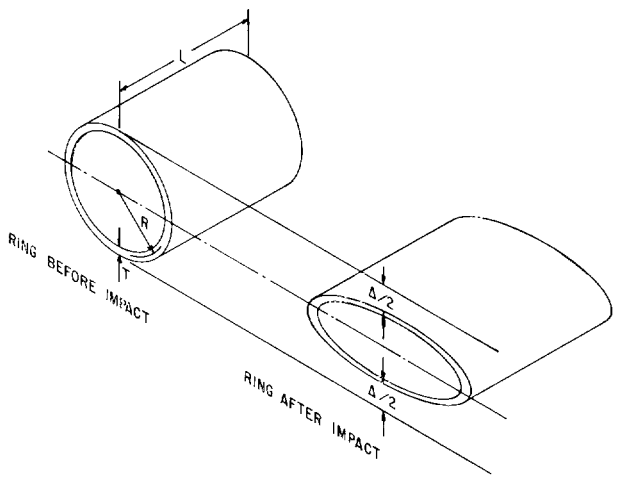

Fig. 2.26. Definitions of Terms Used in Eq. (2.17).

2.8.3 Protective Buffers

An example of a crash frame, designed to protect a cask which, per se, would not meet specifications with regard to the 30-ft-drop is shown in Fig. 2.27. This crash frame was analyzed by means of a plastic hinge technique.[26]

The validity of the analysis was confirmed by the results from several model test drops; these results indicated that the force loading to the cask and contents can be estimated with a reasonable degree of accuracy.[27]

The British have tested a wood and steel crash frame design used to protect heavy lead-shielded isotope casks.[34] The hardwood thermal shield, satisfactorily tested in a 0.5-hr petroleum fire, was designed with enough mechanical strength to maintain its fire protection for casks weighing up to 10 tons even if the cask and shield were subject to the 30-ft regulatory drop before being exposed to the fire.

A vehicle-cask system can be designed in such a manner that a considerable amount of the impact energy is absorbed in the deformation of material located external to the cask. Such a system was designed by the Westinghouse Electric Corporation to protect their 75-ton Yankee

spent fuel shipping cask (see Fig. 2.28). Their analysis of this shock absorbing structure, based on an early version of the regulations, is given in ref. 28.

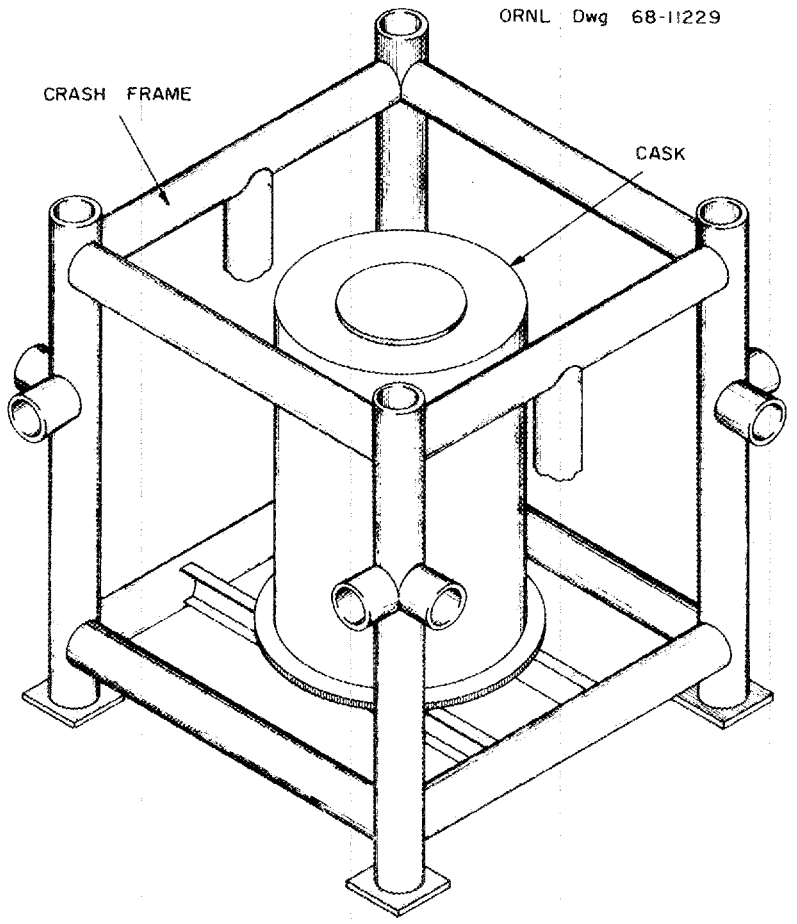

Fig. 2.27. Crash Frame Designed for an Existing Cask.

Another, more elaborate, protective buffer, which can be considered simply as an extension of the cask, was designed to protect several different size isotope shipping casks, the heaviest of which weighs 40,000 lb.[29] The protective structure (see Fig. 2.29), weighs 35,000 lb and is made of concentric steel shells that surround the lead-shielded cask and are held in place by rubber shock absorbers. This buffer is designed to reduce the impact force on the surface of the cask to 50 g when the cask-buffer combination is dropped in any orientation on a solid surface from

a height of 30 ft. Since most of the kinetic energy of the system is dissipated by the shock-absorbing device, the uniform surface loading on the cask can be specified and controlled.

ORNL PHOTO 93319 A

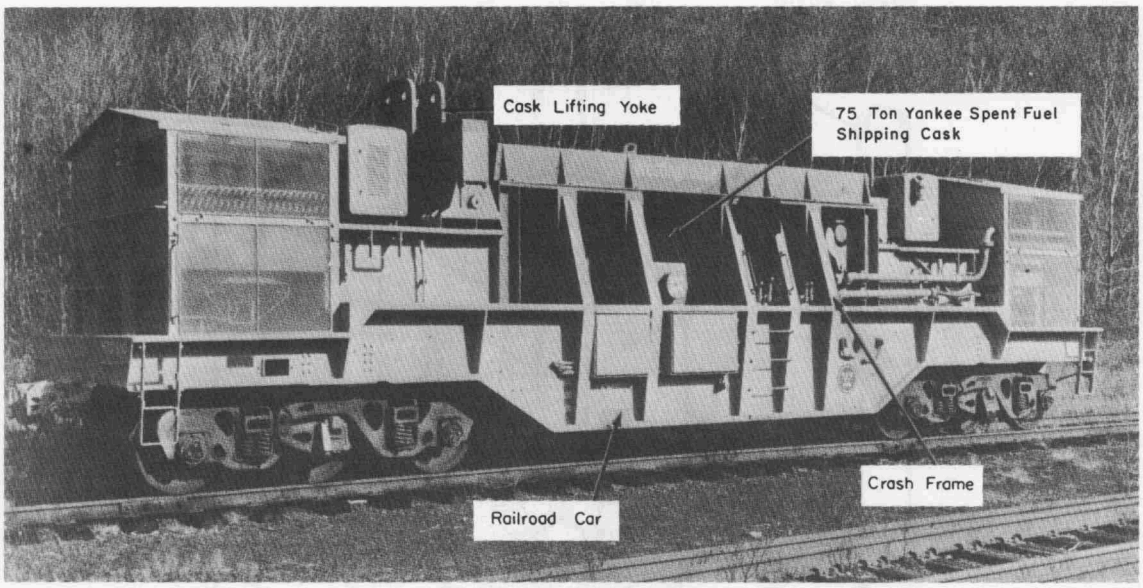

Fig. 2.28. External Crash Frame Mounted on a Railroad Car. (Courtesy of Westinghouse Electric Corporation)

In order to test the adequacy of the design and to make a complete analysis of the buffering system, an impact testing program of model buffered casks was undertaken at the University of Texas.[30] A 0.25-scale model of the HAPO cask-buffer combination was built.

An analysis of the scaling laws indicates that the deceleration received by the cask inside the buffer should be inversely proportional to the scale factor. Since the HAPO system was designed to reduce the deceleration of the cask to 50 g on impact from a 30-ft fall, a deceleration of 200 g was expected for the 0.25-scale models when they were dropped from the same height. Two types of material were used in the buffer to absorb the impact energy: rubber, and a specially designed aluminum honeycomb material. The aluminum honeycomb was evaluated

because its properties are less susceptible to temperature changes and because this material can be used to design smaller buffers with the same energy-absorbing capabilities as those using rubber shock absorbers.

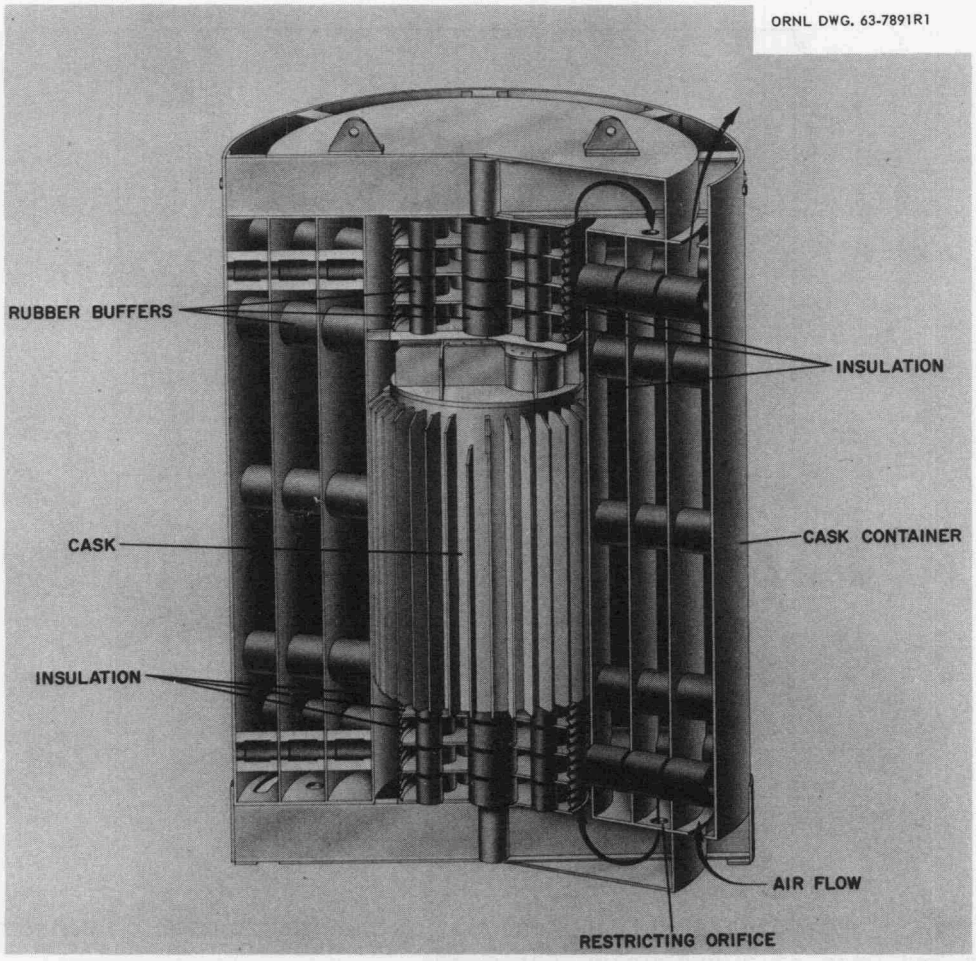

Fig. 2.29. HAPO 1B Cask and Buffer Shield.

An acceleration, velocity, and displacement record of the rubber buffer model is shown in Fig. 2.30. The maximum deceleration of the cask received in this drop was 224 g; however, the "smooth peak" value was about 200 g, which is in excellent agreement with the predicted value.

A similar record for an aluminum honeycomb buffer model is shown in Fig. 2.31. The cask received a peak deceleration of 300 g; the "smooth peak" value was considerably less than 200 g. This is certainly within

acceptable limits and, if required, the honeycomb could be redesigned in such a manner that the "averaged" impact results will agree more closely with the specifications.

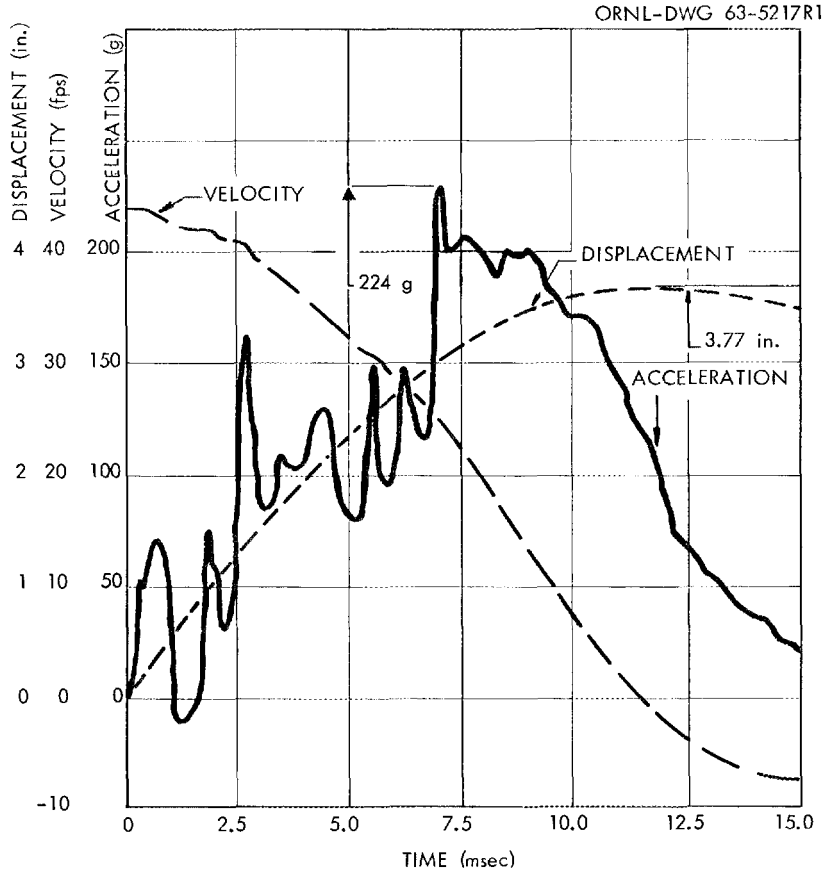

Fig. 2.30. Acceleration, Velocity, and Displacement Record for 30-ft End Drop of a Rubber Buffer Model.

2.8.4 Characteristics of Aluminum Honeycomb

Energy absorption characteristics of aluminum honeycomb were studied at the University of Texas.[31,32] This material has cross-laminated corrugations and is made in various foil thicknesses, corrugation heights, and lamination patterns. Stress-strain curves for a specific honeycomb under static loading and impact velocities of 50 and 100 fps are shown in Figs. 2.32, 2.33, and 2.34. When the honeycomb is compressed to about 20% of its initial thickness (see Fig. 2.31), it becomes almost solid;

therefore, further compression is attainable only at high loadings. The energy absorption capability of such a system is essentially irreversible. The characteristics of the honeycomb under static and impact conditions are summarized in Table 2.5. Note that the honeycomb is slightly stronger under static loading than under impact loading. The maximum amount of energy that this particular material can absorb under an impact load is about 550 in.-lb/in.[3]

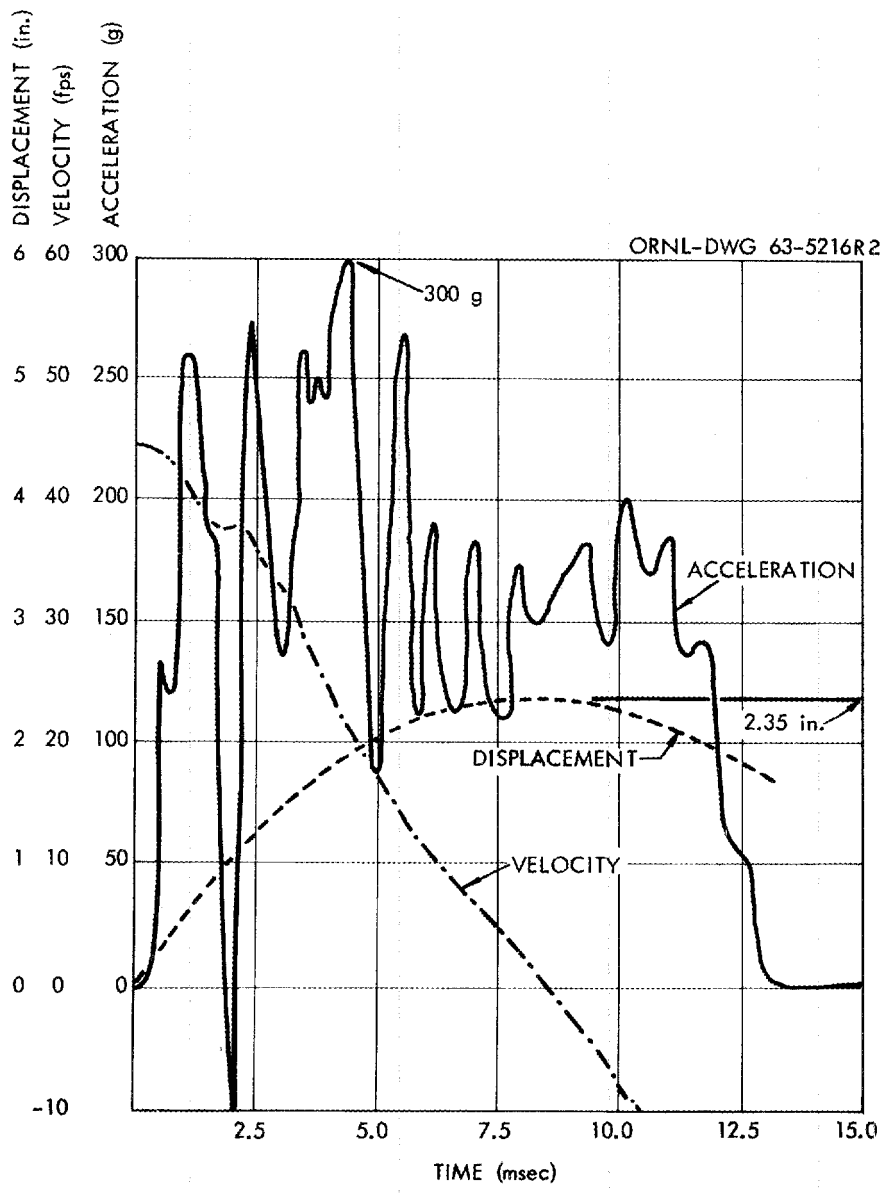

Fig. 2.31. Acceleration, Velocity, and Displacement Record for 30-ft End Drop of an Aluminum Honeycomb Buffer Model.

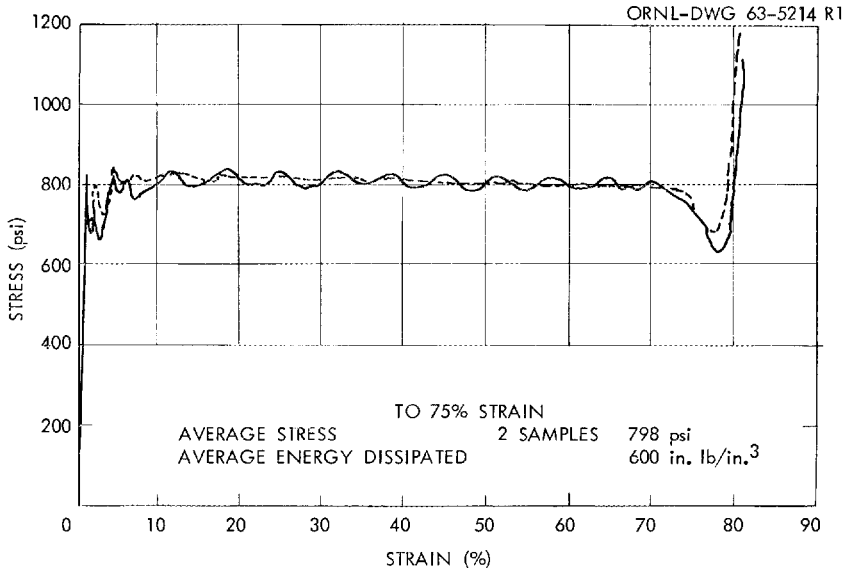

Fig. 2.32. Static Stress-Strain Curves for PR-A-0 Type Aluminum Honeycomb.

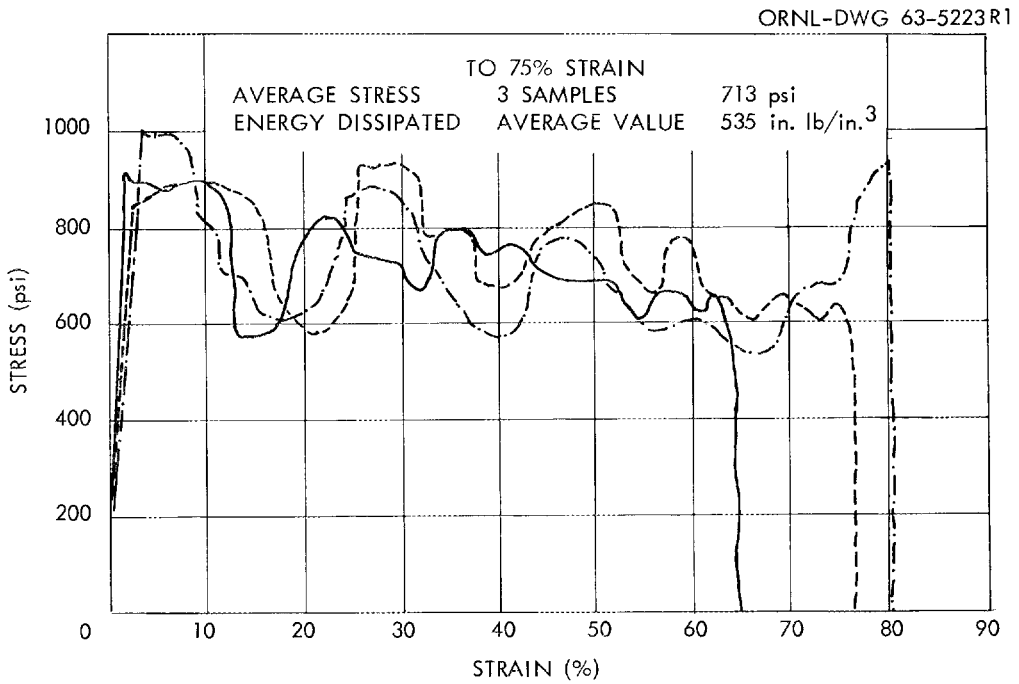

Fig. 2.33. Dynamic Stress-Strain Curves for PR-A-0 Type Aluminum Honeycomb Impacted at 50 fps.

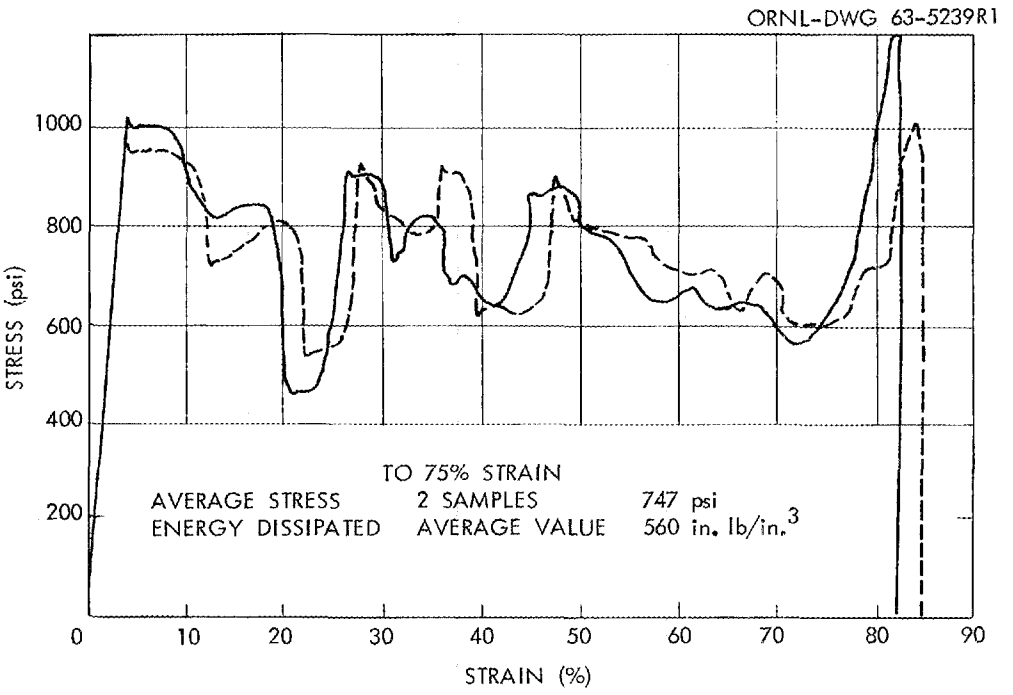

Fig. 2.34. Dynamic Stress-Strain Curves for PR-A-0 Type Aluminum Honeycomb Impacted at 100 fps.

Table 2.5. Energy Dissipation and Average Stress of Aluminum Honeycomb

Material	Impact Velocity (fps)	Average Stress (psi)	Energy Dissipated (in.-lb/in.^{3})	Strain (%)
PR-A-0	0 (static)	798	600	75
PR-A-0	50	713	535	75

2.8.5 The Army-AEC Vehicle Impact Studies

Three vehicle impact tests, sponsored by the USAEC and the Department of the Army, have been carried out in order to determine the effects of an accident on the total transport system.[33,40] The objective of this study was "to provide a realistic understanding of the dynamics of transportation accidents . . . . . ," particularly with regard to vehicle,

cargo, and tie-downs. A massive barrier with a front surface of armor plate was used as the "immovable object" into which the vehicles were driven at velocities varying from 4 to 41 mph. High-speed photography revealed that the barrier did not move during any of the tests.

One of the most significant results of the study was the proof that the fifth wheel is a weak link in a tractor-trailer system; however, if this wheel is reinforced, large fractions of the total energy of the transport system (up to 100%) may be dissipated in the vehicle without seriously involving the cask or tie-downs. For example, Du Pont's 15-ton IMF cask was rigidly tied down to a flatbed trailer (see Fig. 2.18); the fifth wheel was reinforced, and the tractor-trailer was driven, by remote means, into the barrier at 28.5 mph. Results showed that, even though the cab was completely demolished and the trailer frame was bent, the cask remained upright and undamaged on the trailer. Although methods of calculating force inputs to a cask in an accident remain somewhat crude, these tests leave little doubt as to the energy absorption capabilities of the vehicle in a front-end impact. Until methods for making reasonable predictions of the energy absorption capabilities of complex structures become available, such tests will have to be considered as the best method for determining the amount of impact protection that is afforded to the cask by a vehicle.

2.9 Testing Requirements

Because of the uncertainties and inherent approximations in engineering designs, compliance with regulations must sometimes be demonstrated by subjecting the cask to a series of tests rather than relying entirely on analytical treatment. A decision to test will be affected primarily by the purpose of the cask and the designer's knowledge of the applicability of analytical treatments to his particular design. A compilation of cask test results is in preparation by the ANSI N14-7 Subcommittee; this compilation can assist designers in deciding if testing is desirable.

Cask tests would appear to constitute complete proof of a design; but, in fact they do not. Only a limited number of tests are made, generally under conditions that the designer feels are most damaging. This

fact, however, in no way lessens the importance of cask testing. Tests can often be valuable to more than one designer; and, as additional definitive tests are made, analytical techniques can be improved until test results can be predicted with a known degree of accuracy.

2.9.1 Hypothetical Accident Conditions

Designers usually consider subjecting a cask (prototype or scale model) to tests that involve an impact or a fire. The hypothetical accident conditions given in AECM 0529 Annex 2 are noted below:

1. Free Drop – "A free drop through a distance of 30 ft onto a flat, essentially unyielding, horizontal surface, striking the surface in a position for which maximum damage is expected." For actual tests, the mass of the target should be at least ten times the mass of the cask.

2. Puncture – "A free drop through a distance of 40 in. striking in a position maximum damage is expected, the top end of a vertical cylindrical mild steel bar mounted on an essentially unyielding horizontal surface. The bar shall be 6 in. in diameter, with the top horizontal and its edge rounded to a radius of not more than 1/4 in., and of such a length as to cause maximum damage to the package, but not less than 8 in. long.

   The long axis of the bar shall be normal to the package surface.

3. Thermal – "Exposure to a thermal test in which the heat input to the package is not less than that which would result from exposure of the whole package to a radiation environment of 1475°F for 30 min with an emissivity coefficient of 0.9, assuming the surfaces of the package have an absorption coefficient of 0.8. The package shall not be cooled artificially until 3 hr after the test period unless it can be shown that the temperature on the inside of the package has begun to fall in less than 3 hr.

4. Water Immersion (packages containing fissile material only) –

"immersion in water to the extent that all portions of the package to be tested are under at least 3 ft of water for a period of not less than 8 hr."

These conditions are to be applied to a cask, either by calculational methods or by test, in the sequence listed. As a result, the reduction in shielding should not be sufficient to increase the external radiation dose rate to more than 1000 mr/hr (or equivalent) at 1 m from the external surface of the cask. The cask will not release any radioactive material except gases or contaminated coolant (see Table 5.1), and the material in the cask will remain subcritical.

Both prototype and scale model casks have been used in testing programs. However, the fire test should be performed on a prototype cask because the response of the full-scale cask would be difficult to predict, based on test results of a model.

One cask that has recently been subjected to a rather complete testing program was built by Union Carbide Corporation, Paducah Plant, using laminated uranium for shielding. Tests were made to study the structural capabilities of a uranium-shielded cask. A detailed description of these tests, their objectives, and the resulting data and conclusions, reported in ref. 24, is recommended as a guide to testing procedures.

The question of instrumentation of the test specimens frequently arises. To date, strain gages, accelerometers, and brittle lacquer have been used on casks subjected to impact, while thermocouples, heat-sensitive paint or thermo sticks are most frequently used in connection with fire testing. Although the impact data are interesting, frequently no satisfactory method is available to translate such information into expected cask damage. The most useful accelerometer readings have been obtained from buffered cask tests in which the cask itself (i.e., the shielding and cavity) decelerates uniformly; such data are discussed in Sects. 2.8.1 and 2.8.3.

2.9.2 Normal Operating Conditions

Normal operating conditions, presented in Annex 1 of AECM 0529, are given below. Each of the conditions is to be applied separately to determine its effect on the cask.

1. Heat – Direct sunlight at an ambient temperature of 130°F in still air.

2. Cold – An ambient temperature of -40°F in still air and shade.

3. Pressure – Atmospheric pressure of 0.5 times standard atmospheric pressure.

4. Vibration – Vibration normally incident to transport.

5. Water Spray – A water spray sufficiently heavy to keep the entire exposed surface of the package except the bottom continuously wet during a period of 30 minutes.

6. Free Drop – Between 1-1/2 and 2-1/2 hours after the conclusion of the water spray test, a free drop through the distance specified below onto a flat essentially unyielding horizontal surface, striking the surface in a position for which maximum damage is expected.

Free Fall Distance

Package Weight (pounds)	Distance (feet)
Less than 10,000	4
10,000 to 20,000	3
20,000 to 30,000	2
More than 30,000	1

7. Corner Drop – A free drop onto each corner of the package in succession or in the case of a cylindrical package, onto each quarter of each rim, from a height of 1 foot onto a flat essentially unyielding horizontal surface. This test applies only to packages which are constructed primarily of wood or fiberboard, and do not exceed 110 pounds gross weight, and to all Fissile Class II packagings.

8. Penetration – Impact of the hemispherical end of a vertical steel cylinder 1-2/4 inches in diameter and weighing 13 pounds, dropped from a height of 40 inches onto the exposed surface of the package which is expected to be most vulnerable to puncture.

9. Compression – For packages not exceeding 10,000 pounds in weight, a compressive load equal to either 5 times the weight of the package or 2 pounds per square inch multiplied by the maximum horizontal cross section of the package, whichever is greater. The load shall be applied during a period of 24 hours, uniformly against the top and bottom of the package in the position in which the package would normally be transported.

It is not always necessary to subject a spent fuel shipping cask to these normal conditions of transport in order to determine whether the cask is adequate; calculational methods often suffice. There are, however, exceptions. For example, the effect of vibration on the cask contents may be impossible to calculate analytically; this may also be true of the penetration requirement (No. 8), particularly if the penetrator strikes an exposed valve. Tests could be used to resolve the problem.

In addition, Paragraph III.C.2. of AECM 0529 requires the cask, before its initial shipment, to be tested at 50% higher than the normal operating pressure (if the latter exceeds 5 psig). The test should be carried out with the cask at the maximum normal operating temperature; if this is not possible, the test may be made at a lower temperature but at a higher pressure (see ASME Code Sect. VIII, Paragraph UG 99b; Standard Hydrostatic Test).

It is also wise to demonstrate the capability of the cask to dissipate the amount of heat generated by the fuel to an ambient temperature of 130°F in direct sunlight. A test of this type is discussed in Sect. 4.9.4.

Often, spent fuel shipping casks are loaded and unloaded under water. If the normal operating cask temperatures are high, the cask may be

subjected to a thermal shock during this type of unloading procedure. This condition may be avoided by a cask designed to permit the cavity to be flushed with low-pressure steam, hot water, and finally cold water, before lowering into the loading basin. This reduces the thermal shock to the cask and contents. Although not required by the regulations, the consequences of such a thermal shock should be evaluated either by testing or some other method. It is possible that welds could crack under this treatment; visual inspection of such vulnerable areas should be made if the test is performed.

Although a radiation attenuation test is not required by the regulations, it is recommended. Dose rate measurements made when the source is first loaded into the cask will suffice; however, it is frequently desirable to check the effectiveness of the shielding during fabrication. Tests of this nature are discussed in Sect. 4.9.5.

2.10 Comments on Cask Shielding Material

Its low cost, high density, and ability to be easily fabricated, even in odd shapes, make lead the most common material of construction used in the United States for a gamma shield. However, disadvantages of using lead as the primary shielding material are severalfold. For example, lead must usually be encased in steel for fabrication, protection, and handling purposes. Also, since lead contracts appreciably upon solidification from the molten state (more than 3% by volume) care must be taken during the pouring of large steel-encased shields to prevent the introduction of unwanted voids. In addition, the unsatisfactory wetting or bonding of lead to stainless steel can also contribute to the formation of unwanted voids.

Fire presents a hazard to lead-filled casks. The coefficient of thermal expansion for lead is higher than that of steel, which is normally used to encase the lead (Fig. 2.35).[17,35] High pressures, which may develop in the cask during exposure to a fire, could result in broken welds and subsequent loss of shielding.

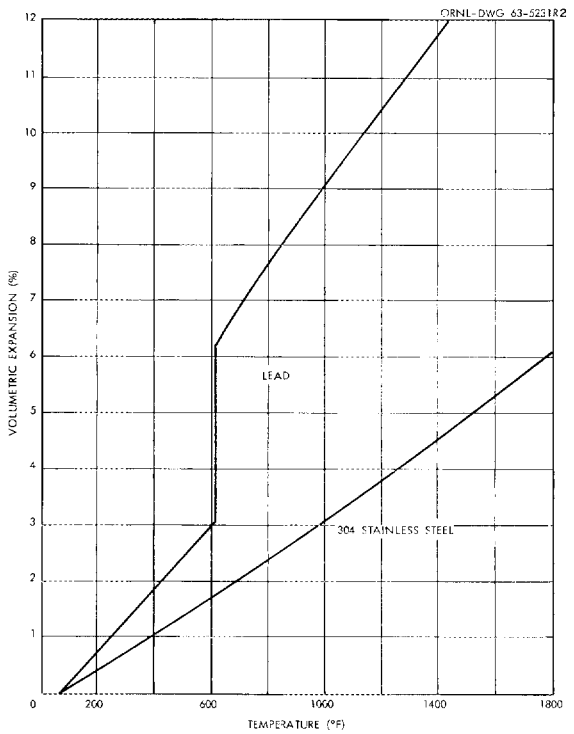

Fig. 2.35. Volumetric Expansion of Lead and Steel as a Function of Temperature.

The British have performed some heat tests on small lead-filled, steel-shelled casks[36] and found that the use of controlled voids in the cask shield to provide thermal expansion space for the lead was not entirely satisfactory. Melting of the lead would not always take place around the void area; thus these areas did not prevent pressure buildup and the loss of lead in other areas. In addition, the position of the void after cooling (even when no lead was lost) was not predictable and could result in areas of inadequate shielding. However, other tests[44] have indicated that a thick steel outer shell provides a considerable amount of fire protection for the lead shielding. The steel requirements are briefly discussed at the end of Sect. 2.2.

Other shielding materials that may be used to advantage include uranium and steel. Uranium is structurally about as strong as steel;

both shielding materials can resist the consequences of an accidental fire better than lead. Neither material is easily deformed and consequently will impart a higher shock loading to the cask contents when involved in a 30-ft impact unless buffering is supplied. Details of uranium shielding are discussed in Chap. 8.

The British have made a number of large casks from cast iron or steel containing no lead or other high-density material. This eliminates the problem of differential thermal expansion found in the lead cask with steel shells. The shielding does not melt when involved in a normal petroleum fire, and the extent of shielding deformation due to impact is reduced. In addition, fabrication costs are generally lower.

The main disadvantage of steel casks is that, for an identical cavity size, a steel cask is larger and weighs considerably more than a lead-shielded cask. This, in turn, means that transportation charges for the cask will normally be higher.

For a comparison of mechanical properties of typical shield materials, see Table 2.6.

2.10.1 Heat Transfer Under Normal Conditions

When lead-shielded casks are to be used for transporting fuel that generates a large amount of heat, the thermal resistance between the lead and steel shells should be as low as possible; air gaps between the lead and the steel shells of the cask could cause excessive temperatures in the cask cavity. To reduce the normal operating temperature of the cask cavity and contents, many cask designers desire a metallurgical bond between the outer shell and the lead shield.

It is possible to design the cask in such a way that a good bond between the lead and the outer shell is not required for efficient heat removal. Figure 2.36 shows schematically a sectioned cask in which the fins are welded or brazed to the inside of the outer shell.[37] These fins are designed to move as the lead expands and contracts under varying heat loads while still maintaining mechanical contact with the lead; they are intended to provide a good path for heat to be conducted from the lead to the outer steel shell.

Table 2.6. Physical and Chemical Properties of Some Shielding Materials

	Uranium[a]	Lead[b]	Mild Steel and Iron	Stainless Steel[c]
Density, g/cc	18.9	11.34	7.87	7.9
lb/in.^{3}	0.683	0.410	0.284	0.29
Melting point, °C	1133	326	1537	1400-1454
°F	2070	618	2798	2550-2650
Boiling point, °C	3900	1525	3000	-
°F	7052	2777	5430	-
Ultimate tensile strength, psi	60,000-100,000[d]	2300-3000	95,000-130,000[d]	80,000
Yield strength, psi	25,000-45,000[d]	1180-1380	60,000-125,000[d]	30,000
Modulus of elasticity, psi x 10^6	24[d]	2	28.5	28
Poisson's ratio	0.21	0.45	0.29	0.30
Hardness, Brinell No.	185-385[d]	4.3	149-170[d]	150
Thermal expansion, (in./in.-°C) x 10^{-6}	6.8 to 15[d]	29	11.7	10.4
Specific heat, cal/g-°C	0.028	0.031	0.11	0.12
Thermal conductivity (at 100°C), cal/cm-sec-°C	0.58	0.082	0.11	0.039
Btu/hr-ft-°R	14.0	19.9	26.5	9.4

[a]Unalloyed depleted uranium.

[b]Chemical lead ASTM B29-55.

[c]Type 304L, annealed.

[d]Varies with treatment and alloy.

ORNL-DWG 63-4338R2

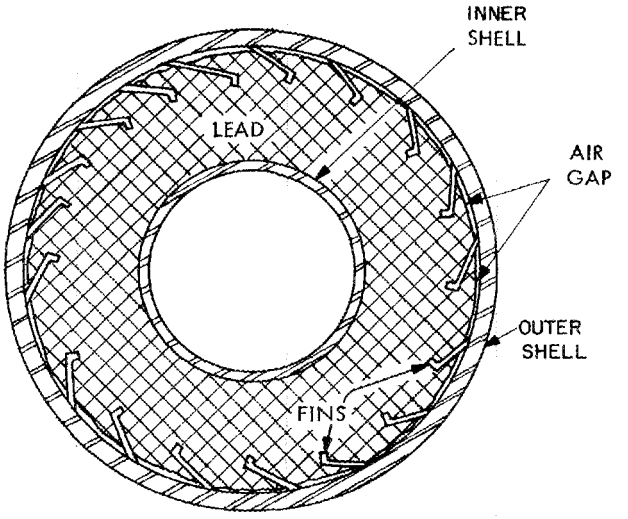

Fig. 2.36. Cask Containing Internal Heat Transfer Fins.

2.10.2 Heat Transfer Under Accident Conditions

Although the probability of a cask being involved in a fire may be low, an examination of the consequences is far from academic since the potential monetary loss is significant. As its temperature increases, lead expands at a faster rate than steels that normally contain it. Consequently, molten lead could rupture the steel shell and flow out. Cavity pressure would increase, particularly if a liquid coolant were present, which could cause the containment to be violated with the attendant loss of coolant; fission products could thus be dispersed.

The current regulations require that a cask be able to withstand the environment of a 0.5-hr fire at 1475°F without exceeding the prescribed loss of contents or dose limits discussed in Sect. 7.2. Because of the small amount of test data presently available, as well as the impracticality of testing many casks, the task of designing in terms of the consequences of the 0.5-hr fire is primarily a matter of good engineering judgment.

Normally, the cask is designed to provide a path for heat to flow from the source to the cask surface. This, however, also results in a

path for heat to be transferred from the surface of the cask to the cavity. Since, in a fire, much of the energy is transferred by radiation, it is desirable to build a cask that would reject heat by convection and not accept thermal energy by radiation. The HAPO cask is designed to do this by providing several concentric steel shells surrounding the cask to act as buffers (see Fig. 2.29). Under normal conditions air cools the cask by flowing around the cask, then past the cask, and finally out the top of the buffer. In a fire, the hot gases are not expected to pass the few entrance barriers, and the radiant energy of the flame will be intercepted by the outer surface of the buffer.

Since the addition of a fire shield would add to the total cost and since proper operation of the fire shield following the 30-ft drop is difficult to guarantee, this technique has seen limited use.

A second method of protection is to design the shield in two portions: an inner shield to contain lead and an outer shield to contain lead or wet plaster.[3] In a fire, material in the outer compartment is sacrificed either by melting and running out holes designed in the outer shell (in the case of lead) or by driving water vapor out pressure relief valves (in the case of wet plaster). The void thus created would provide a thermal buffer against continuing radiant energy emanating from the fire.

Casks of both types have been built, but testing has been limited. A schematic of the three-shelled cask containing lead in the outer compartment is shown in Fig. 2.14.

Calculations made for a large lead-shielded cask indicate that, in the 30-min 1475°C fire, an unrestrained (no circumferential fins) outer shell of a cask will deform by plastic strain.[26] Such strains can be shown to be low in magnitude (below the ultimate elongation at the elevated temperatures), thus indicating that lead will not be lost. It does not now, however, account for problems such as local hot spots or restraints caused by, for example, fins or a cask cradle, or for failures or weaknesses induced as a result of the cask impact. In practice, cylindrical casks are more likely to rupture than stretch,[41] although cubicle-shaped casks have gone through considerable deformation before rupturing.[42]

2.11 Fuel Magazine Design

The function of the spent fuel shipping cask magazines (or baskets) is to:

1. Protect and contain the fuel assemblies during transportation and handling.
2. Assist in the dissipation of decay heat.
3. Control criticality.

Since the decay heat dissipation problem is one of the chief factors in limiting cask capacity under normal conditions, the selection of thermally efficient materials can be an important economic factor.

2.11.1 Protection and Containment of Fuel During Transportation and Handling

The magazine serves to segregate each fuel assembly, and to keep the assemblies from abrading each other while in transit.

Fuel assemblies from test reactors are normally shipped in a vertical orientation, which is identical to their orientation during operation. With this in mind, the magazines designed for these assemblies are usually readily removable from the casks. They serve also to safely move the fuel in both the loading or unloading pool.

Because of their length, power reactor fuel assemblies are normally shipped in a horizontal orientation. These assemblies are designed to operate in the vertical position, however, and excessive strain may be applied to the fuel pins if insufficient support is provided for the assemblies in the horizontal position. The fuel magazines must be designed to provide this support as uniformly as possible over the entire fuel assembly length. During an impact accident, the magazines are designed to limit the movement of each assembly and to prevent load application to an assembly other than that due to its own weight.

The designer must consider the following items in the selection of materials of construction of the cask magazine:

1. Compatibility of fuel, coolant, and cask cavity materials. This compatibility includes possible corrosion tendencies under cask operating conditions and thermal expansion properties during the operation and life of the equipment.
2. The most efficient use of cask cavity space while meeting the requirements of criticality, thermal conduction, protection of fuel elements, radiation shield capability, and structural integrity.
3. The optimum selection of fabrication techniques and construction costs.
4. The possibility of usage for a wide class of fuel elements.
5. The requirements for handling of the magazine and of individual elements.

2.11.2 Dissipation of Heat

Fuel magazines provide a significant path for the transfer of decay heat to the cask wall. In the normal operating condition, the magazine fuel assembly should be designed to provide efficient flow channels for circulating coolant. In the loss-of-liquid-coolant condition, the magazine structure provides heat conduction paths from the hot fuel elements to the shielding. When fixed (welded in place) baskets are used, the heat paths will extend directly from the fuel assemblies to the shielding, making a very efficient heat removal system.

2.11.3 Control of Criticality

One of the best methods for controlling criticality is to alloy neutron absorbing material with the structural members of the magazine. For heat dissipating purposes, the magazine structural members often range from 0.25 in. to 0.75 in. in thickness; such thicknesses permit the use of small alloy percentages of materials with high thermal neutron cross-sections for effective control of criticality.

Fuel magazines consisting of cavities lined with boral (35% B_4C + Al) are used in shipping aluminum-clad testing reactor fuel assemblies (see Fig. 2.37). Fire test and loss-of-coolant conditions, as defined in the regulations may restrict the usefulness of boral as a structural material. Such weakness may be overcome by cladding the boral with stainless steel; tests performed at Battelle Memorial Institute indicate that this clad material functions with adequate structural integrity above 1400°F.

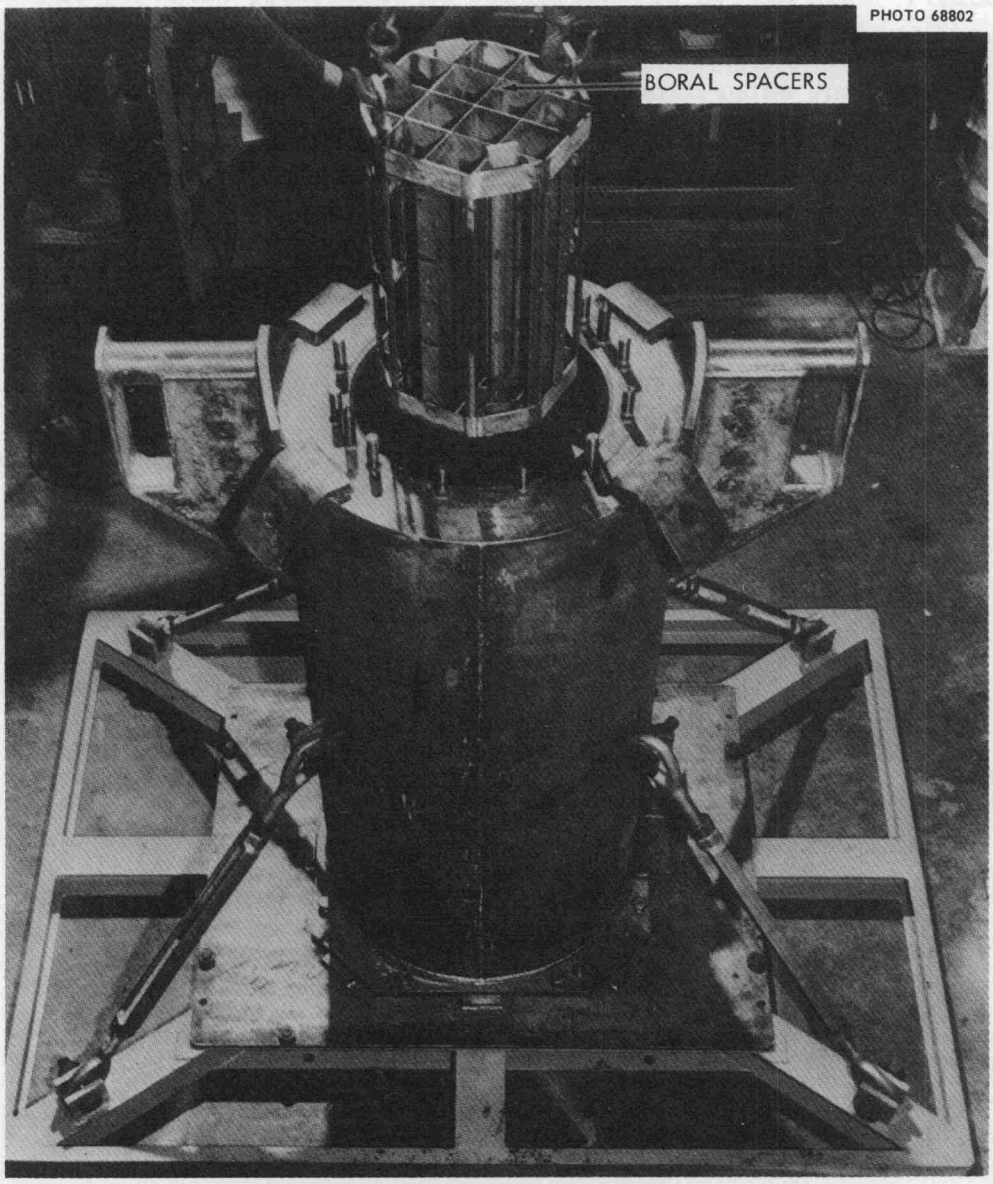

Fig. 2.37. BMI-1 Shipping Cask with One Fuel Basket Removed. (Courtesy of Battelle Memorial Institute)

Borated stainless steel has been employed as a poison by some designers. Although it is an effective poison, borated stainless steel has the disadvantages of high initial cost, difficulty of procurement, relatively low thermal conductivity, and a history of embrittlement after welding.

Copper, alloyed with either cadmium or boron, is also a very effective neutron absorbing material and, in addition, is a very good thermal conductor. Such alloys are difficult to fabricate, however, and add considerably to the magazine cost; they may also require cladding to (1) protect the coolant water from copper particle contamination, and (2) permit magazine and cask decontamination by acid solutions.

Geometric or spatial control of criticality can be achieved with proper magazine designs. However, this method of control may lead to inefficient use of cask space as compared with the use of neutron absorbing materials.

Table 2.7 is a list of pertinent data describing typical materials used in the construction of magazines for spent fuel assembly shipment.

Table 2.7. Properties of High-Cross-Section Magazine Alloys

Name	Minor Alloy Constituent (%)	Thermal Conductivity (Btu ft/hr-ft-°F)	Σ_a Macroscopic Thermal Neutron Cross Section (cm^{-1})	Density (lb/cu in.)	Methods of Construction
Boral	35 B_4C	25 (200°F) 19 (500°F)	15.6[a] (1/8 in. thick) 11.8 (1/4 in. thick)	0.091	Bolt, rivet weld clad with SS
Borated SS	0 - 1	12	3.4	0.28	Weld, bolt, clad with 300 series SS
Boron-copper	0 - 2	140 (est.)	8.1	0.318	Cast, roll, machine, weld
Cadmium-copper	0 - 3	2% = 150 (est.)[b]	4.8	0.319	Cast, roll, machine, weld

[a]Experimentally determined.

[b]Thermal conductivity tests made from various alloys are reported to range from 140-180 Btu ft/hr-ft^2-°F.

2.12 Simple Beam Requirement

When regarded as a simple beam supported at its ends along any major axis, the cask must be capable of withstanding a static load, normal to and uniformly distributed along its length, equal to five times the fully loaded cask weight without generating stresses in any material of the cask in excess of the yield strength of that material. This portion of the regulations is usually interpreted as being applied to the outer shell alone. The strength of the lead shielding and the local stresses that would occur around the support points are neglected.

Stresses in the outer shell resulting from the uniform load can be determined analytically using the following equation:

$$S = \frac{MC}{I} , \tag{2.18}$$

where

S = the stress, lb/in.^{2},

M = the bending moment, in./lb,

C = one-half the height of the cask in the direction of bending, in.,

I = the cross-section moment of inertia, (in.)^4.

The bending moment is given by:

$$M = \frac{5WL}{8} , \tag{2.19}$$

where

$5W$ = five times the total cask weight, as required in the regulations, and L is the length between supports.

The cross-section moment of inertia, I, for a cylindrical cask (see Fig. 2.38a) is calculated from:

$$I = \frac{\pi}{4} (r_2^4 - r_1^4) , \tag{2.20}$$

where

r_2 = the outside radius of the outer shell, in.,

r_1 = the inside radius of the outer shell, in.

The cross-section moment of inertia for a flat surfaced cask [see Fig. 2.38(b)] is:

$$I = \frac{1}{12}\left(b_2 d_2^3 - b_1 d_1^3\right) . \tag{2.21}$$

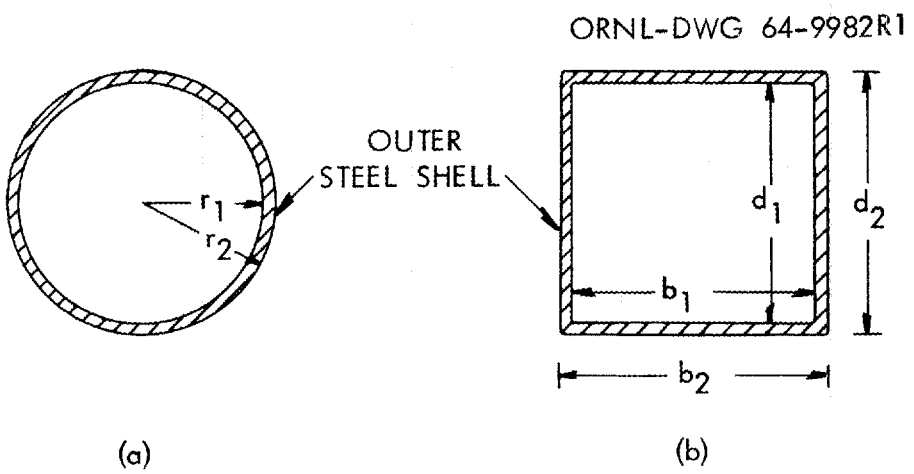

Fig. 2.38. Cross Section of the Outer Shell of a Lead-Shielded (a) Cylindrical and (b) Flat-Surfaced Cask.

The strength provided by the lead shielding prevents local buckling of the outer shell; this helps to ensure the validity of the assumptions which lead to the use of Eq. (2.18).

Casks that meet the uniformly loaded beam strength requirement are considered to have adequate rigidity; however, they do not necessarily have sufficient puncture resistance unless the shell thicknesses were calculated in accordance with Sect. 2.1.

2.13 References

1. H. Nelms, Structural Analysis of Shipping Casks. Vol. 3. Effects of Jacket Physical Properties and Curvature on Puncture Resistance, ORNL-TM-1312, Vol. 3 (June 1968).

2. H. G. Clarke, Proceedings of the International Symposium for Packaging and Transportation of Radioactive Materials, p. 261, SC-RR-65-98 (Jan. 1965).

3. Examination of the International Atomic Energy Agency's Regulations for the Safe Transport of Radioactive Materials, EUR-3485e, f, Vol. IV (1968).

4. A. E. Spaller, Structural Analysis of Shipping Casks, Vol. 2. Resistance to Puncture, ORNL-TM-1312, Vol. 1 (Sept. 1966).

5. D. W. Goodpasture and L. B. Shappert, Energy Absorption Capability of Steel Determined from Cask Impact Tests, ORNL-TM-680 (Jan. 6, 1964).

6. Products for Piping and Pressure Vessel Construction, 2d ed., Taylor Forge and Pipe Works Catalog 571, 1961.

7. M. F. Spotts, p. 204 in Design of Machine Elements, 3d ed., Prentice-Hall, Inc., New York, 1962.

8. L. B. Shappert, A Guide to the Design of Shipping Casks for the Transportation of Radioactive Material, ORNL-TM-681 (April 1965).

9. F. E. Shadid, Analytical Investigation of Procedures Proposed for the Design of a Shipping Cask for Radioactive Materials, M.S. thesis, University of Tennessee, Knoxville (December 1967).

10. C. B. Clifford, The Design, Fabrication, and Testing of a 1/4 Scale Model of the Demonstration Fuel Element Shipping Cask, KY-546 (June 10, 1968).

11. J. H. Evans and W. C. Stoddart, Structural Analysis of Shipping Casks, Vol. 5, Lifting Devices, ORNL-TM-1312, Vol. 5 (in preparation).

12. R. O. Letourneau, Loads in Shipping Container Tie-down Lines, SC-TM-65-320 (July 1965).

13. H. G. Clarke and K. D. Doshi, Structural Integrity of Shipping Containers for Radioactive Materials. Part III: Analysis of Container Tie-down During Collision of Highway Vehicles, NYO-2539-2 (February 1966).

14. J. M. Biggs, Introduction to Structural Dynamics, McGraw-Hill, New York, 1964.

15. K. D. Doshi, Structural Integrity of Shipping Containers for Radioactive Materials. Part IV: An Analytical Study of Longitudinal Vehicle Collisions, NYO-2539-4 (Nov. 1965).

16. J. Marin, Engineering Materials, p. 231, Prentice-Hall, Inc., New York, 1952.

17. Lead in Modern Industry, Lead Industries Associated, New York, 1952.

18. J. H. Vincent, Proc. Cambridge Phil. Soc. X, 332 (1898-1900).

19. J. P. Andrews, Phil. Mag., Series 7, 8, 53, Suppl. (Dec. 1929)

20. J. P. Andrews, Phil. Mag., Series 7, 9, 58 (1930).

21. H. G. Clarke and W. E. Onderko, Model Impact Tests Pertaining to Shipping Containers for Radioactive Materials, TID-7651, p. 238.

22. D. Tabor, The Hardness of Metals, Oxford Clarendon Press, London, 1951.

23. B. B. Klima, L. B. Shappert, and W. C. Stoddart, Structural Analysis of Shipping Casks. Impact Testing of a Long Cylindrical Lead-Shielded Cask Model, ORNL-TM-1312, Vol. 6 (March 1968).

24. C. B. Clifford, Demonstration Fuel Element Shipping Cask from Laminated Uranium Metal, Part III. Tests and Demonstrations, KY-552 (March 12, 1969).

25. C. T. Welch, An Experimental Investigation of the Effects of Impact on a Cylindrical Container of Lead and Steel Construction, M. S. thesis, University of Tennessee, Knoxville (December 1967).

26. J. H. Evans, Structural Analysis of the Brookhaven National Laboratory Mobile Gamma Irradiator, ORNL-TM-2178 (September 1968).

27. J. H. Evans, Structural Analysis of the Brookhaven Shipboard Irradiator, ORNL-TM-2064 (January 1968).

28. Shipment of Irradiated Yankee Fuel Elements, WCAP-1859, Westinghouse Electric Corp., Pittsburgh, Pa. (October 1961) (Revised January 1962).

29. C. W. Smith et al., "Application of External Impact Energy Sorption to Large Radioisotope Shipping Casks," p. 265 in Summary Report of the AEC Symposium on Packaging and Regulatory Standards for Shipping Radioactive Material, Germantown, Md., Dec. 3-5, 1962, TID-7651.

30. E. A. Ripperger, Model Studies of Buffered Shipping Containers for Fission Products, HW-77963, Structural Mechanics Research Laboratory, University of Texas (May 1963).

31. J. M. Lewallen and E. A. Ripperger, Energy Dissipating Characteristics of Trussgrid Aluminum Honeycomb, University of Texas, SMRL-RM5.

32. E. A. Ripperger and M. D. Reifel, Size Effects of Trussgrid Aluminum Honeycomb, University of Texas, SMRL-RM-6.

33. Y. Kamita and R. Morgan, Final Report on Engineering Test of Transportation of Nuclear or Fissile Materials, DPS-2582 (November 1967).

34. F. E. Dixon et al., The Design of Ventilated Thermal and Mechanical Shields for a Heavy Lead-Shielded Flask Which Contains a Heat Emitting Source, AERE-R5808, July 1968.

35. T. Lyman (ed.), Metals Handbook, 8th ed., Vol. 1, p. 422, American Society of Metals, 1961.

36. F. E. Dixon, "The Design of Shielded Containers to IAEA Standards," p. 331 in Summary Report of AEC Symposium on Packaging and Regulatory Standards for Shipping Radioactive Material, Germantown, Md., Dec. 3-5, 1962, TID-7651.

37. E. C. Lusk, Patent No. 3,005,105, issued Oct. 17, 1961.

38. J. H. Evans, Structural Analysis of Shipping Casks, Vol. 7: Cask Tie-down Design Manual, ORNL-TM-1312, Vol. 7 (May 1969).

39. A. Estep, L. R. Shobe, and B. R. Dewey, Energy Absorbtion Parameters in Steel Rings, Report EM 69-1, University of Tennessee (March 1969).

40. W. C. Stoddart, O. A. Kelley, and L. B. Shappert, Dynamic Conditions in Collision Tests of Vehicles for Transporting Nuclear or Fissile Materials, ORNL-NSIC-61 (in publication).

41. Examination of the IAEA's Regulations for the Safe Transport of Radioactive Materials, EUR-3485e, f, Vol. IV, 1968, p. 133.

42. G. P. Wachtell and J. W. Langhaar, Fire Test and Thermal Behavior of a 15-Ton Lead-Shielded Cask, DP-1070 (Oct. 1966).

43. W. C. Corder, Battelle Memorial Institute, personal communication, Aug. 4, 1967.

44. F. E. Dixon and A. J. Brook, The Use of Thick Steel Wrapper Plates for Large Lead Filled Flasks, Which Could Obviate the Need for Special Thermal Shields, AERE-R5870, Sept. 1968.

45. Letter to C. S. Ehrman (Allied Chemical Corp.) from R. L. Chandler, (USAEC, Savannah River Operations Office) dated April 29, 1969.

46. J. H. Evans, Analysis of the Oak Ridge National Laboratory Shipping Cask D-38, ORNL-TM-2220, pp. 5-10 (Oct. 1968).

3. MATERIALS

The primary objectives of cask design are to shield and to contain a source of radioactive material. The properties of the materials of construction must be such that these objectives can be carried out under a number of environmental conditions as specified in the regulations.

This chapter provides guidelines for selecting materials of construction. Materials that have the desirable properties recommended below are given in tabular form, along with their ASTM material specifications.

To be acceptable, a material of construction should have adequate strength, ductility, and toughness at subzero (-40°F), ambient, and elevated temperatures. In addition, factors such as cost, availability, ease of fabrication, and ability to resist corrosion by decontamination solutions (which can be acids such as HNO_3), galvanic corrosion between adjacent materials, and stress corrosion must be considered. The stipulation that materials of construction have adequate toughness at -40°F is probably the most restrictive requirement; it is the one that removes many otherwise acceptable materials from the tables given below. Using ASTM as a basis, materials that require a minimum of 15 ft-lb (average) of energy to break a Charpy keyhole specimen at temperatures of -40°F are considered adequate to meet the regulations. Such toughness should be sufficient to prevent brittle fracture from occurring at low temperatures. It is recognized that Charpy values do not enter into design calculations. The above wording applies to the material used in the cask proper and not the metals used inside the inner cavity for spacing or criticality considerations.

The designer may specify materials other than those recommended in this chapter, provided he considers the factors described above and the design analysis reflects these considerations.

A listing of special materials used in shipping casks for radiation shielding and criticality control is also provided to assist the designer.

3.1 Plate

Recommended carbon, low alloy, and stainless steel plate specifications are listed in Table 3.1. These materials have good strength and ductility and are adequate for service at -40°F. The ASTM A300 steels are given mandatory impact tests and are specially manufactured for low-temperature service by control of composition, melting practice, and heat treatment; these materials are difficult to procure in small quantities with reasonable delivery schedules. However, the ASTM A516 grades 55 and 60, not manufactured to A300 requirements, have proved to be sufficiently tough at low temperatures that individual impact tests of different heats are not required; this material is available in small quantities. A533, a nuclear reactor grade steel, is also considered to be an acceptable material.

Several grades of austenitic stainless steel plate conforming to ASTM Specification A240 are listed. Stainless steel, although more expensive, has inherent characteristics that are often ideally suited for certain portions of a shipping cask. This material has good strength, ductility, and toughness over the range of subzero to elevated temperatures; it also has excellent corrosion resistance, particularly to chemicals used in decontamination, and good forming and welding properties. The particular grades recommended were selected to provide a balance of all the factors involved. ASTM A240 type 304 is suggested unless the application requires the added corrosion resistance for decontamination in the heat-affected weld zone that is provided by 304L, 321, and 347.

Stainless steel clad-plate is listed for the situation in which the designer desires to take advantage of both carbon and stainless steel in his cask design.

3.2 Pipes and Tubes

Suggested carbon and stainless steel pipe and tube specifications are shown in Table 3.2. These steels have adequate resistance to brittle fracture at -40°F and, like the plate materials, they are weldable grades of moderately strong, ductile materials.

Table 3.1. Recommended Plate Materials

Type of Material	ASTM Specification and Grade	
Carbon and low alloy steel	A300,	A516 all grades A203 A and B
	A516,[a]	grades 55 and 60
Low alloy steel	A533,	grades A, B, and C
Stainless steel	A240,	types 304, 304L, 321, and 347
Stainless clad-steel	A264 with A300 or A516 base metal and A240 cladding	

[a]Manganese content shall be 0.85 to 1.20%. All plate shall be normalized by the mill and marked accordingly.

Table 3.2. Recommended Pipe and Tube Materials

Type of Material	ASTM Specification and Grade	
Carbon steel pipe	A333,	grades 1 and 6
Stainless steel pipe	A312,	types 304, 304L, 321, and 347
Carbon steel tube	A334,	grades 1 and 6
Stainless steel tube	A213,	types 304, 304L, 321, and 347

3.3 Forgings, Fittings, and Bolting

Forging, weld fitting, and bolting materials having mechanical and chemical properties comparable to or better than, those listed for plate are given in Table 3.3. The low alloy steels selected are specifically produced for subzero temperature applications. The listed stainless steels have good strength at both -40°F and at elevated temperatures. Whenever possible, the low alloy steel bolting should be used rather than stainless steel to minimize galling of threads during remote assembly operations.

Table 3.3. Suggested Material Specifications for Forgings, Fittings, and Bolting

Type of Material	ASTM Specification and Grade	
Low alloy steel forgings	A350,	grades LF1 and LF2
	A508,	classes 4, 4A, 5, and 5A
Stainless steel forgings	A182,	types 304, 304L, 321, and 347
	A473,	types 304, 304L, 321, and 347
Low alloy steel fittings	A420,	grade WPL1
Stainless steel fittings	A403,	grades WP304, 304L, 321, and 347
Low alloy steel bolting	A320,	grade L7, L10, and L43
Stainless steel bolting	A193,	types B8, B8C, and B8T

3.4 Welding Electrodes, Rods, and Wire

The following filler metal specifications are applicable to shipping cask fabrication: ASTM A316, A371, B295, and B304. The filler metal used in a particular weld will depend upon the base metal or metals being joined together.

3.5 Special Materials

Lead that is used for shielding is normally specified as ASTM B29, pig lead, chemical grade. A 4% antimony--lead alloy has been used on occasion; however, this material is not recommended because of its lower melting point and the tendency to form cracks, spongy areas, and voids.

Uranium metal is also used as a shielding material for special applications. This material is discussed in Chap. 8.

Materials that are commonly used for criticality control are as follows:

pure cadmium metal purchased to ASTM B440 specifications,

stainless steel containing small quantities of natural boron or boron enriched in ^{10}B,

boral plate, a uniform dispersion of boron carbide crystals in aluminum, with a cladding of commercially pure aluminum such as that produced by Brooks and Perkins, Inc., of Detroit, Michigan,

aluminum-cadmium, copper-cadmium, and copper-boron carbide alloys.

3.6 Identification Marking and Purchase Order Requirements

Information regarding identification marking and purchase order requirements of materials are given in Sect. 4.1 of this guide.

4. FABRICATION

This chapter sets forth a general philosophy as well as specific recommendations regarding the fabrication, testing, and acceptance of shipping containers for transporting radioactive materials. The nature of the materials being transported makes it imperative, with regard to the safety and welfare of the public, that the manufacture and the inspection of the containers be in strict accordance with the design drawings and construction specifications. Further, a quality control program must be carried out by the fabricator, and an audit inspection system maintained by the purchaser, to provide confidence that the finished container meets the contract requirements.

The predetermination of all fabrication and testing requirements for the many sizes, types, capacities, and intended uses of shipping casks is not possible. Rather, this chapter consists of recommendations for the designer and purchaser to include in the specifications. The designer must carefully and conservatively evaluate, and select appropriate sections of this chapter, or he must develop more restrictive requirements to ensure that the completed shipping container will have all of the characteristics upon which the designer based his safety analysis.

Consideration was given to recommending that the fabrication and testing comply with the requirements of widely used codes such as Sect. III or Sect. VIII of the ASME Boiler and Pressure Vessel Code. However, this approach was judged inadequate because it does not ensure compliance with Federal regulations for shipping containers; also, it is possible that codes developed for other equipment would not be applied and interpreted properly for shipping casks. It is recognized that some agencies or companies may require an ASME Code Stamp; however, this does not relieve the designer from the responsibility of establishing specifications and quality control requirements for the specific circumstances involved in the construction and inspection of shipping containers. For example, manufacturing operations such as lead pouring, inspections for shielding integrity

and acceptance tests (such as heat transfer) are not included in existing codes for vessels and tanks.

Accordingly, this Chapter sets forth proposed minimum quality assurance requirements for inclusion in procurement specifications. Some of the tests are optional depending upon design considerations.

The designer is expected to prepare engineering drawings and specifications that are appropriate for the particular requirements of the shipping container. The purchaser shall bear the primary responsibility for ensuring that the shipping cask is designed and fabricated in accordance with the regulations. The purchaser shall constitute the approval authority of all documents submitted by the fabricator through the inspector described herein. The inspector shall answer to, and be a representative of, the purchaser. The purchaser, through his inspector, is responsible for auditing the manufacturer's procurement, fabrication, and quality control program. The inspector is expected to visit or be in residency at the fabricator's plant or any subcontractor's plant as may be required in order to discharge his responsibilities.

Conformance to the requirements of the contract is the responsibility of the manufacturer or fabricator. As part of this responsibility, he shall establish and conduct a quality assurance program for all procurement, fabrication, and testing operations. The program shall be patterned after the latest revision of RDT F2-2 and Appendix IX of Sect. III of the ASME Boiler and Pressure Vessel Code. A detailed quality control manual shall be submitted to the purchaser for his review and approval prior to the start of procurement of materials. The fabricator shall notify and receive approval of the purchaser for any change in the QA Program prior to introducing the change or deviation.

The quality of all products produced under the contract, whether manufactured within the manufacturer's plant or obtained from an outside supplier, shall be controlled at all points necessary to assure conformance with the drawings and specifications.

Throughout the contract, the manufacturer shall provide competent quality control personnel who will perform the prescribed inspections and

tests. In addition, he shall maintain a Fabrication Record that includes, but is not limited to, such information as mill test reports, in-plant procedures and standards, heat-treatment charts, records of welding procedure qualification, welding procedures and operator qualification tests, all approved deviations, test and inspection results, "as built" drawings and details of all subcontracts correlated in such a manner that the purchaser can be assured of conformance. This record shall be delivered to the purchaser at the completion of the contract.

4.1 Materials

Only materials of construction which conform to the drawings and specifications shall be used in fabrication.

4.1.1 Mill Test Reports and Marking

Purchase orders for materials except ASTM A403 and A420 shall include the requirement that a certified mill test report be furnished. The mill test report shall include the ASTM specification No., the manufacturer's name, the heat No., and the results of all chemical analysis and mechanical properties test results. Orders for A403 welding fittings shall state that the manufacturer shall furnish a certification of conformance. Orders for A420 welding fittings shall state that the manufacturer will provide test pieces, the results of the chemical analysis and the impact tests, and the heat treatment applied to the material.

The purchase order should also state that all material shall be marked in accordance with the applicable ASTM specification.

4.1.2 Cutting Material

When oxyacetylene or an arc process is used for cutting material, all slag and previously molten material shall be removed by mechanical means prior to further fabrication or use.

Edges that will be exposed in the finished cask shall be rounded (grinding is permitted) to a radius of at least 1/8 in. or chamfered at 45° to at least 5/32 in. flat. Stainless steel is to be cut only by

machining, abrasive cutting, or arc cutting with inert-gas-shielding tungsten-arc, plasma arc, or flux injection methods. The use of iron powder as a flux for arc cutting is prohibited. In instances in which cut edges are to be welded, the disturbed material shall be removed by machining or grinding to eliminate all irregularities and to provide a clean, bright, smooth surface on the cut edge. When flux-injection cutting is used, the cut surface shall be machined or ground back at least 1/32 in. to remove all contamination. Grinding or machining of stainless steel shall not be done with tools that have been used on carbon steel. Tools and grinding wheels shall be freshly sharpened and dressed. Wire brushing of stainless steel shall be done only with stainless steel brushes that have not previously been used on materials other than stainless steel. Clamps, wedges, clips, etc., welded to (or mechanically fastened in contact with) stainless steel shall be made of that material only.

4.1.3 Repair of Defects in Materials

Minor defects in material as defined by the appropriate ASTM specification may be repaired, provided that the owner approves the method and the extent of repairs. Defective material that cannot be satisfactorily repaired shall be rejected.

4.1.4 Forming Materials

Materials may be formed to the required shape by any process that will not degrade the physical properties of the material below that required by the application.

4.2 Identification and Control of Materials

The marking on each piece of material shall be retained until fabrication is complete. If the material is cut into two or more parts, or if the marked surface is to be removed, the marks shall be carefully transferred prior to cutting.

Unless it can be positively identified, any piece of material whose marking is lost or removed must be classified as "not fully identified"

material and subjected to the tests of Sect. 4.8.2 before it is re-marked and used in fabrication.

The manufacturer shall maintain a detailed record that lists the description and marking of each piece of material used in the fabrication, and shall correlate this information with material test reports. This record shall be incorporated into the Fabrication Record (see Sect. 1.10.).

4.3 Welding

Production welding shall not be undertaken until both the welding procedure and the welders or welding operators have been qualified. All such qualifications must be approved by the inspector. Brazing and pressure welding processes are not permitted.

4.3.1 Welding Processes and Filler Metals

Stainless Steel to Stainless Steel. - Any arc-welding process may be used without including impact tests as a part of the procedure qualification.

Stainless Steel to Carbon Steel. - Any arc-welding process may be used. The filler metal shall be stainless steel ASTM A298 or A371 class E309, or Inconel ASTM B295 class ENiCrFe-2 or ASTM B304 class ERNiCrFe-6

No impact tests are required.

Carbon Steel to Carbon Steel. - The shielded metal-arc process may be used with ASTM A316 class E8016 or 8018-C1, -C2, or -C3 electrodes without requiring impact tests as a part of the procedure qualification. The use of other electrodes with the metal-arc process, or the use of other processes (e.g., the inert gas-metal arc or submerged-arc processes) requires three impact tests of the deposited weld metal; the weld must have an average of 15 ft-lb of impact energy (Charpy keyhole) at -40°F in order to qualify as an acceptable process.

Covered Electrodes. - Covered electrodes shall be dry when used. Except for 7010-A1 electrodes, covered electrodes shall be used within 9 hr after their removal from a sealed receiving container or a vented

electric oven maintained at 150 to 350°F. If not used within 9 hr, the electrodes shall be placed in a vented oven maintained at 150 to 350°F for at least 8 hr. If the electrode manufacturer's recommendations for drying do not allow the above method, approval of the drying method to be used shall be obtained from the purchaser. Type 7010-A1 electrodes shall not be held in heated ovens.

The fabricator's quality control program shall establish and enforce written procedures for (1) procurement of all welding filler metals and fluxes, (2) an identification, storage, and issuance system, and (3) records to ensure the use of the correct filler material.

4.3.2 Qualification of Welding Procedures

Each welding procedure to be used in construction shall be qualified by the manufacturer in accordance with Sect. IX of the ASME Boiler and Pressure Vessel Code. In addition, the test welds shall be subjected to the same nondestructive inspection methods as will be required for the production welds. The welds must pass the NDT acceptance criteria established for the production welds in order to be acceptable. A copy of the procedure qualification test report and the welding procedure shall be, after approval by the Inspector, incorporated into the Fabrication Record.

The welding procedures shall include control of the width of any bead of welding as follows. String beading is preferred. Weave beading with covered electrodes shall not result in a weld bead with a width greater than:

(1) six times the diameter of the electrode core wire for 70xx and 80xx electrodes;

(2) three times the diameter of the electrode core wire for 300 series stainless steel electrodes;

(3) three times the diameter of the core wire for Inconel filler metal.

Wash passes or remelting to improve the surface appearance is not permitted.

4.3.3 Qualification of Welders and Welding Operators

Performance qualification of welders and welding operators shall conform to Sect. IX of the ASME Boiler and Pressure Vessel Code and the NDT tests defined in Sect. 4.3.2 of this report. A copy of the performance qualification test report shall be, after approval by the Inspector, incorporated into the Fabrication Record.

A test conducted by one manufacturer shall not quality a welder to do work for any other manufacturer.

4.3.4 Lowest Permissible Temperatures for Welding

Preheat temperatures shall be in accordance with the weld procedures. However, when the temperature of the base metal is lower than 60°F, the area to be welded shall be preheated until it is warm to the hand. All surfaces shall be dry and protected from rain, snow, and high winds.

4.3.5 Fitting and Alignment

Edges to be welded shall be uniform and free of all foreign material. Parts to be welded shall be fitted, aligned, and retained in position during the welding operation such that at the point of welding the root face shall not be offset by more than 1/16 in., or one-eighth of the nominal thickness of the material, whichever is smaller. Joints shall be held adequately by suitable clamps or sufficient tack welds, and a welding sequence shall be utilized to attain the complete joint spacing and alignment. Tack welds shall be free of cracks or other discontinuities and must be completely fused into, and form a homogeneous part of, the root weld layer if they are not removed as the welding progresses.

The edges of butt joints shall be held during welding in such a manner that the tolerances stated in Sect. 4.3.7 are not exceeded in the completed joint.

4.3.6 Cleaning of Surfaces to Be Welded

Surfaces to be welded shall be clean and free of foreign material such as grease, oil, lubricants, and marking paints, for a distance of

at least 3 in. from the welding edge. When weld metal is to be deposited over a previously welded surface, any slag shall be removed.

4.3.7 Joints - Alignment Tolerances

After welding, the offset shall not exceed 1/16 in. or one-eighth of the nominal thickness of the part at the joint, whichever is smaller. Weld taper in excess of this amount is not permitted unless detailed on the engineering design drawing.

4.3.8 Finished Joints

Joints shall have complete penetration and shall be free from cracks, severe undercuts, overlaps, abrupt ridges, or valleys. Fillet welds shall have complete fusion at the root of the fillet. To ensure that the weld grooves are completely filled so that the surface of the weld metal at any point does not fall below the surface of the adjoining part, weld metal may be built up as a reinforcement on each side of the joint. The thickness of this reinforcement on each side shall not exceed the following dimensions:

Thickness of Part (in.)	Maximum Thickness of Reinforcement (in.)
$\leq 1/2$	3/32
$> 1/2 < 1$	1/8
> 1	3/16

4.3.9 Miscellaneous Welding Requirements

The reverse side of double-welded butt joints shall be prepared by chipping, grinding, or melting out, so that sound metal is secured at the root of the weld before filler metal is applied from the reverse side. This requirement is not intended to apply to any process of welding by which proper fusion and penetration are otherwise obtained and by which the base of the weld remains free from impurities.

If the welding is stopped for any reason, extra care shall be taken in restarting the process to achieve the required penetration and fusion.

For submerged arc welding, chipping out a groove in the crater is recommended.

In instances where single-welded joints are used, particular care should be taken in alignment to ensure complete penetration and fusion at the root of the weld over its full length.

In the case of plug welds, a fillet around the bottom of the hole should be deposited first.

4.3.10 Repair of Weld Defects

Visible defects such as cracks, pinholes, and incomplete fusion, as well as defects that can only be detected by prescribed examinations or tests, shall be removed; then the joint shall be rewelded.

Approval to make a weld repair and approval of the repair procedure shall be obtained from the purchaser prior to the removal of metal from, and the repairing of, a defective weld area. Repair welding shall be done in a manner conforming to the requirements of the purchaser's specifications. The repaired weld shall be retested and, in order to be acceptable, shall meet the quality requirements for the original weld.

Removal of undercutting by reduction of the base metal section adjacent to the welded seam is not permitted.

4.4 Weld-Metal Cladding of Carbon Steel

4.4.1 Welding Procedure Qualification Requirements

A separate welding procedure shall be qualified for the corrosion-resistant weld-metal overlay cladding of carbon-steel-base metal, in accordance with Sect. IX of the ASME Boiler and Pressure Vessel Code. In addition, when any of the changes listed below are made, the procedure shall be requalified; although other changes do not require requalification the procedure specification must be corrected to show the changes. (Note that these requirements are similar to those specified in Sect. III of the ASME Boiler and Pressure Vessel Code, 1968 Edition.

For All Welding Processes:

(1) A change from one welding process to any other welding process or combination of welding processes.

(2) A change in the composition of the deposited weld metal from one A-No. in Table Q-11.3 of Sect. IX of the Code to any other A-No., or to an analysis not listed in the table; however, each AISI type of A-7 or A-8 analysis (Table Q-11.3) requires separate qualification.

(3) The addition of welding positions other than those already qualified.

(4) A change in the specified preheating temperature range.

(5) A change in the specified heat-treating temperature or an increase of 25% or more in the total time at temperature.

(6) A change from a multiple weld layer to a single weld layer, or vice versa.

For Shielded Metal-Arc Welding:

(1) A change in the electrode diameter used for the first layer.

(2) A change from one F-No. in Table Q-11.2 to any other F-No. (notes 2 and 3 in Table Q-11.2 shall apply).

(3) An increase of more than 10% in the amperage used in the application of the first weld layer.

For Submerged-Arc Welding:

(1) A change in the composition or type of flux used. Requalification is not required for a change in flux particle size.

(2) A change from single-wire to multiple-wire techniques.

(3) A change from ac to dc or from dc to ac current, or a change in the polarity of the current.

(4) The addition or elimination of oscillation of the electrode.

(5) A variation of more than 10% in travel speed.

(6) A change in wire diameter.

For Gas Tungsten-Arc Welding or Gas Metal-Arc Welding:

(1) A change from one gas to another, or to a mixture of gases.

(2) A reduction of 25% in the rate of gas flow.

(3) A change from an inert gas or a mixture of inert gases to a shielding gas containing more than 2% of an active gas (e.g., oxygen or hydrogen).

(4) A change from single-wire to multiple-wire techniques.

(5) A change from ac to dc or from dc to ac current, or a change in the polarity of the current.

(6) The addition or elimination of oscillation of the electrode.

(7) A variation of more than 10% in travel speed.

(8) A change in wire diameter.

The procedure qualification shall be made on a test plate simulating the conditions to be used in production, except that the test plate may be thinner. However, the thickness of the plate shall not be less than either 3/4 in. or the thickness of the fabrication material, whichever is less. The postweld heat treatment of the test plate shall be equivalent to that to be applied to the parts, except that the total time at temperature may be achieved during one heating cycle.

The weld overlay surface shall be examined using a liquid penetrant in accordance with Sect. 4.8.5. Following this examination, the test plate shall be sectioned to make four side-bend test specimens, two parallel and two perpendicular to the direction of welding. These specimens shall have dimensions identical to those of the guided side-bend specimens noted in Sect. IX of the ASME Boiler and Pressure Vessel Code. They shall be bent in a test jig and shall meet the acceptance requirements of Sect. IX, except that the maximum allowable defect in the cladding shall be 1/16 in. In addition, a chemical analysis shall be obtained from the

overlay at a depth from the surface of at least 0.020 in. The chemical analysis obtained shall be within the range of analysis given in the procedure specification.

4.4.2 Performance Qualification Test

Welders and welding operators shall be qualified for working with metal plate having a thickness that is either not less than 3/4 in. or is equal to that of the material to be used in fabrication, whichever is thinner, in accordance with the requirements of a qualified weld-metal overlay cladding procedure specification.

The essential variables of paragraph Q-22 of Sect. IX of the ASME Boiler and Pressure Vessel Code shall apply. The test plate shall be subjected to the penetrant and bend tests as noted in Sect. 4.4.1, except that the chemical analysis need not be made. Any welder or welding operator who qualifies the procedure is automatically qualified.

4.5 Joining Integrally Clad or Weld-Metal-Overlay Clad Material

Each welding procedure used for joining clad material shall be qualified by the manufacturer in accordance with Sects. VIII and IX of the ASME Boiler and Pressure Vessel Code. A separate welding procedure (and qualification) is required for welds that join clad material to austenitic stainless steel. Test welds shall be heat treated if the fabricated material is to be heat treated.

The performance qualification of welders to join clad materials shall conform to Sects. VIII and IX of the ASME Boiler and Pressure Vessel Code. Performance tests, using clad material, should be made by a welder before he is permitted to weld base metal, cladding, or the composite joint.

4.6 Postweld Heat Treatment

Any postweld heat treatment procedure shall be documented, submitted to the cask owner for review and approval, and made a part of the Fabrication Record.

4.7 Lead Pouring

Lead pouring shall be done in a single, continuous operation unless an alternative method is developed and proven by a test which will ensure no high, local radiation at lead interfaces resulting from multiple pours.

The manufacturer shall prepare a detailed lead-pouring procedure that will provide information concerning the grade and purity of the lead; the grade of any tinning compounds, a description of the heating, pouring, and cooling facilities (including sketches); the sequence of operations; a precleaning or pretinning procedure (if used); the method and speed of pouring; preheating and controlled cooling methods; temperature control requirements and measurements; and details of pouring and vent connections.

After approval by the Inspector, the lead pouring shall be performed in accordance with the procedure, and a copy of the lead pouring procedure shall be incorporated into the Fabrication Record.

4.8 Inspection

4.8.1 Access for Inspector

The Inspector shall be permitted free access, at all times while work on the fabrication is being performed, to all parts of the manufacturer's shop concerned with the fabrication; also, he shall have access to the facilities of those supplying materials, subassemblies, or labor to the manufacturer. The manufacturer shall keep the Inspector informed of the progress of the work, and shall notify him reasonably in advance of any required tests or inspections.

4.8.2 Inspection of Material

The Inspector shall assure himself that all materials used comply in all respects with the material requirements given in Sect. 4.1.

When ASTM A403 or A420 material is to be used, the manufacturer shall make certified mill test reports or certification of compliance records available to the Inspector prior to the use of the material. The Inspector shall satisfy himself that the material complies with the specifications

and is properly marked and correlated with the mill test reports. A copy of all approved test reports and certifications shall be incorporated into the Fabrication Record.

If a question regarding the identity or adequacy of the material arises, the fabricator shall perform chemical analysis and mechanical tests to verify that the material complies with the applicable specification. Reports of such tests shall be reviewed by the Inspector and, if approved, such records shall become a part of the Fabrication Record.

All materials to be used in fabricating a cask shall be inspected for the purpose of detecting, as far as is possible, defects that would affect the adequacy of the fabrication.

Particular attention should be given to cut edges and other parts of rolled plate that would disclose the existence of serious laminations, shearing cracks, and other objectionable defects.

The Inspector shall assure himself that the thickness and other dimensions of the material comply with those specified on the design drawings.

4.8.3 Inspection of Surfaces During Fabrication

As fabrication progresses, the edges of plates, openings and fittings shall be examined to detect defects, as well as to determine that the work has been properly done.

4.8.4 Dimensional Inspection

The Inspector shall satisfy himself that components conform to the prescribed shape and meet thickness requirements after forming.

The Inspector shall assure himself of the proper fit, to the curvature of the surface, of appurtenances to be attached to curved surfaces.

During and after fabrication, any necessary dimensional inspections shall be performed to ensure that the completed fabrication conforms to the design drawings and that mechanical parts can be physically assembled.

Any critical feature requiring special inspection, such as the flatness or the surface finish of gasket seats, shall be specifically indicated on the design drawings. A report of the dimensional inspection of all such features shall be incorporated into the Fabrication Record.

4.8.5 Weld Inspection

The Inspector shall assure himself that the welding procedures employed in the fabrication have been qualified under the provisions of this guide.

The Inspector shall assure himself that only the welders and the welding operators who are qualified under the provisions of this guide are being allowed to fabricate the weldment.

The Inspector shall have the right, at any time, to call for, and to witness, tests of the welding procedure or tests to determine the ability of any welder or welding operator.

All welds, including the heat-affected zone, shall be inspected at least twice with liquid penetrants, using procedure A-2 or B-3 of ASTM E-165, or with magnetic particles, using ASTM E109. The first inspection shall be made on completion of the root pass, then after preparing the second side of welds made from two sides (if appropriate). The second inspection shall be made after the weld is completed. Finished welds shall be inspected on both surfaces after heat treatment and/or any machining is complete. Cracks, in-line porosity, or other linear defects should be removed down to sound metal and then repaired. Adequate penetrant inspection will, in most cases, require some grinding of the welds.

4.8.6 Check of Postweld Heat-Treatment Practice

The Inspector shall satisfy himself that any postweld heat treatment is correctly performed and that the temperature readings conform to the requirements. A copy of the heat-treatment procedure and furnace charts shall be incorporated into the Fabrication Record.

4.8.7 Inspection During Fabrication

The Inspector shall inspect each component, at such stages of construction as he deems necessary, to assure himself that fabrication is being carried out in accordance with the design drawings.

Interior surfaces of enclosed chambers shall be examined as completely as possible before final closure is made.

4.9 Testing

4.9.1 Shielding Chamber Leak Test

Before any shielding chamber is filled with shielding material, the integrity of the chamber shall be demonstrated by a leak test. This testing shall be performed while joints are accessible for repair and before any leak paths can be plugged with shielding material.

Leak tests may be performed by any procedure that can be demonstrated to have a sensitivity of 1 cm^3 (STP) of air per hour. Acceptable test methods are: mass spectrometry, helium leak detection, halogen leak detection, vacuum rate-of-pressure-rise, and pressurized soap bubble.*

If leakage is indicated, the leaks shall be located and repaired; then the test shall be repeated.

4.9.2 Pressure Test

After fabrication is complete, the cavity (and any other chamber that is pressurized in service) shall be subjected to a pressure test to demonstrate structural integrity.

Each chamber to be tested shall be separately filled with water and pressurized to twice the maximum normal operating pressure or 40 psig, whichever is the greater. This pressure shall be maintained for 10 min. No evidence of leakage or mechanical deformation shall be noted during this period.

For the purposes of this test, gaskets other than service gaskets may be used.

---

*See Sect. 5 of the ASME Boiler and Pressure Vessel Code (in draft form).

If the cask is designed for total containment during a fire and does not have a relief device, the test pressure must at least be equal to that anticipated under the accident conditions.

4.9.3 Leak Test

After the pressure test is complete, the cask shall be assembled with a service gasket, and the cavity shall be subjected to a leak test.

The cavity shall be pressurized to 1-1/2 times the maximum normal operating pressure or 7-1/2 psig, whichever is greater, with a gaseous mixture containing at least 10% of a test gas to which the leak detector is sensitive. Testing may be done by using a helium mass spectrometer or a halogen leak detector if the testing procedure has been demonstrated to have a sensitivity equivalent to 1 cm^3 (STP) of air per hour at the differential pressure used in the test. All accessible welded and mechanical joints shall be surveyed.

Any indication of leakage shall require repair and retesting of the cask.

4.9.4 Heat-Transfer Acceptance Test

If heat transfer calculations indicate a cask surface temperature is 180°F or greater under design heat loads and normal conditions of transport, a heat transfer test shall be performed before the cask is accepted by the purchaser. Such a test will provide information on material bonding, air gaps, etc., and be useful in providing actual data on its thermal performance.

The heat source provided in the cask cavity for use in the the test shall be equal to, or greater than, 25% of the design heat load of the cask. Temperatures shall be measured and recorded at a minimum of three points each on the inner and the outer cask shells. In addition, the temperature should be measured at points (inside the cavity) that could come in contact with the fuel (e.g., nuclear-poison divider plates).

Measured temperatures that differ by more than 10% from those calculated for the test heat load must be reconciled. A report of these tests, along with the original temperature records, shall become a part of the Fabrication Record.

The Inspector shall witness all heat-transfer tests and shall sign the original temperature record.

4.9.5 Shielding Integrity Test

Prior to the initial use of a cask for shipping irradiated materials, the integrity of the shielding of the cask shall be demonstrated. The cask shall be loaded with the material for which it is designed (or an equivalent), insofar as is practical, and the entire outer surface shall be surveyed for radiation in excess of the allowable limits.

Gamma Scanning and Probing. — Inspection by gamma scanning and probing to determine the soundness of the lead is an optional test. This test is a quality control operation often specified to increase the probability that the cask will comply with the radiation requirements when it is loaded with the material to be shipped. When the test is included in the contract, the requirements are as given below.

The manufacturer shall prepare a gamma probe procedure, which includes information concerning: (1) the electronic equipment, (2) the radiation source and strength, (3) the calibration standards for both scanning and probing, (4) the grid pattern, (5) the scintillation crystal size, (6) the positioning equipment, (7) the method of reading and recording the radiation detected, (8) the measuring technique, and (9) the acceptance requirements. The procedure that is used shall be acceptable to the Inspector prior to its application, and he shall be notified so that he may audit the inspection if he desires. The procedure and all the results shall be made a part of the Fabrication Record.

4.10 Fabrication Record

The manufacturer shall maintain currently, in the Fabrication Record, documents indicating compliance with this guide. The Fabrication Record should include, but is not limited to, the following items:

(1) A material record specifying (a) product form and heat number, (b) correlation of part and test report, and (c) cask component name or part number.

Marked drawings or annotated bills of material may be necessary to satisfy this requirement.

(2) Material test reports or other evidence of acceptability for each piece of material, in compliance with the stipulations listed in Chap. 3.

(3) Welding procedure, procedure qualification, welder performance records, and lead pouring procedure.

(4) Reports of all inspections and tests, including liquid penetrant examinations; dimensional inspections; pressure and leak tests; heat transfer, shielding, and lead bonding integrity tests. Radiographs shall be included if radiographic inspection is performed.

(5) Reports of any required check analyses, clearly identified with the material they represent.

(6) Furnace temperature charts in cases where heat treatment is performed.

(7) Any deviation, for any reason from this guide.

(8) "As-built" drawings if, for any reason, the fabrication process deviates significantly from the design drawings and the latter drawings do not present a clear and correct description of the construction of the cask or show proper sizes of materials and location and geometries of welds.

The Fabrication Record shall be assembled by the manufacturer and shall be kept current at all times. The Inspector shall have access to the Record and, at regular intervals, shall assure himself that it is complete and correct. Any deficiencies found shall promptly be rectified by the manufacturer. The Inspector shall maintain a log in which he records the dates of his visits to the manufacturing plant, status of work at those times, notations of materials accepted, notations of inspections witnessed, difficulties encountered in fabrication, deviations from design details and specification, and a chronological record of the progress of the work. On completion of the job, the Inspector's log shall be incorporated into the Fabrication Record.

On completion of fabrication and testing, the Fabrication Record shall be reviewed by the manufacturer and then by the Inspector. The manufacturer shall certify to the purchaser, in writing, that the fabrication is (with noted exceptions) in complete conformity with the contract.

5. HEAT TRANSFER

5.1 Introduction

All shipping casks should be evaluated to determine their temperature responses in thermal environments under normal and accident conditions. Specifically, the temperatures that should be determined are the maximum cask surface temperature and the maximum fuel element temperature under normal conditions, the temperature distribution through the shield, and the maximum fuel element temperature under accident conditions.

The normal ambient temperature range is defined in the regulations to be -40 to +130°F. There must be no release of radioactive material from the containment vessel as a result of exposure to these temperatures. Under accident conditions the cask is assumed to experience a fire, whose temperature is 1475°F, for 0.5 hr; in this case, radioactivity released from the cask must not exceed the limits given in Table 5.1.

Table 5.1. Limits for Radioactive Material Released[1] during Fire

No radioactive material, except gases and contaminated coolant, may be released from the cask; the total radioactivity content of the coolant must not exceed either 0.1% of the total radioactivity of the cask contents or the following designated limits:

Transport Group[a]	Curies
I	0.01
II	0.5
III & IV	10.
Inert gases	1000.

[a]Specific isotopes are arranged in transport groups. The complete list is given in Table 1.1.

DOT regulations do not specify temperature limitations for the actual cask surface or fuel, but require that the accessible cask surface temperature not exceed 180°F under normal operating conditions. The IAEA regulations require the same limitation with regard to temperature when the shipment is made under "full load" conditions. The accessible cask surface can be changed from the actual cask surface by use of a personnel shield which would permit higher temperatures on the prime (inaccessible) surface area of the cask. However, since fuel temperatures affect fuel integrity which, in turn, affects potential contamination in the event of a cask leak, both fuel and actual cask surface temperature limitations should be considered by a designer for his specific cask and type of fuel.

For example, the fuel temperature under normal operating conditions can be restricted to that which was experienced by the fuel during reactor operation, assuming that such a temperature did not cause the fuel elements to rupture. There may be an economic justification for operating at higher temperatures and, if so, the safety of such operating temperatures should be investigated and reported.

Under the 0.5-hr fire accident condition, fuel element temperatures will increase. The maximum temperature that the fuel should be permitted to attain under accident conditions will depend on the cladding, the material of construction, the cladding thickness, the fuel material, the material of construction, the cladding thickness, the fuel material, the burnup, the cooling time, the specific power, the fuel damage caused by impact, etc. It is impossible to indicate precisely how, or to what extent, each item will affect the maximum permissible fuel temperatures; however, some general statements in this regard may be made.

The maximum temperature that the cladding attains under accident conditions should be less than the temperature at which the fuel ruptures. This rupture temperature will also vary with the items enumerated in the paragraph above and should be calculated for each type of fuel element under the accident conditions if the cask designer wishes to achieve maximum fuel temperatures under operating conditions.

A new section (Sect. 5.4.2) included in this guide describes one method for analyzing rupture temperatures and minimum cooling times.

If the fuel elements are individually contained in sealed canisters, temperature limitations may be relaxed from those that otherwise would be considered reasonable, although canister integrity must be assured.

Maximum fuel element temperatures, discussed in Sect. 5.4, can be calculated by utilizing numerical methods that are capable of determining individual fuel element response under transient conditions. Digital computer codes utilizing such methods are available[2-5] and have been used for this purpose. Each code requires considerable experience to obtain best results for a given problem; thus no comparison of the codes is made here.

5.2 Heat Sources

The temperature of the cask surface under normal operating conditions is dependent upon the heat that the cask must dissipate to the environment. The heat stems from two sources: the decay heat load caused by the radioactive decay of isotopes within the material being shipped, and the solar heat load, which results from the impingement of solar radiation on the surface of the cask. Although both sources change with time, variations in the decay heat load are generally insignificant during shipment. Decay heat is usually the major portion of the total heat load that must be dissipated.

The contribution of solar radiation to the total cask load rarely exceeds 15% of the entire amount of heat that the cask must reject. The solar heat load depends on the projected surface area of the cask, the condition of the cask surface, the season of the year, the hour of the day, and other factors enumerated in Sect. 5.2.2.

5.2.1 Decay Heat Load

The amount of decay heat that is generated by a spent fuel element is dependent on the time the fuel element spends in the reactor (irradiation time), the number of fissions occurring per unit time in the element, and

the time that an element is allowed to decay before it is shipped (i.e., cooling time). A current light water power reactor fuel element at the design burnup with a cooling time of 120 days would be expected to generate heat at the rate of from 4 to 10 kw.

One of the most recent calculational tools recommended for determining decay heat is a code[6] in which experimental data[7-9] have been used to cover a wide range of cooling periods. This code, which was developed at Oak Ridge National Laboratory utilizes the fission rate (operating power), irradiation time, and cooling time as input variables. A parametric representation of the decay heat source that was constructed by use of the code is presented in Fig. 5.1. Figure 5.2 presents the same data, except that it has been replotted to show the effects of burnup and specific power on the decay heat. The data used in constructing Figs. 5.1 and 5.2 were based on the decay of fission products resulting from the thermal fission of ^{235}U. Fission product yields vary with neutron energies and the fissionable isotopes present;[10-13] however, the data for ^{235}U can be used for the thermal fission of ^{239}Pu with less than 7% error when the cooling time is less than 120 days. After one year of cooling, the error approaches a maximum (Fig. 5.1), which is about 33% below the actual heat output of ^{239}Pu fission products. At cooling times greater than about 2000 days, the heat output from Fig. 5.1 becomes conservative.

Figures 5.1 and 5.2 may be used to determine Q_d, the decay heat generation rate, of an average fuel element by using the information given in List 1. Items 4a and 4b may be used to calculate Item 3.

List 1

1. Reactor operating power, Mw
2. Cooling time, days
3. Reactor operating time, days
4. (a) Fuel burnup, Mwd/metric ton
   (b) Reactor fuel loading, kg

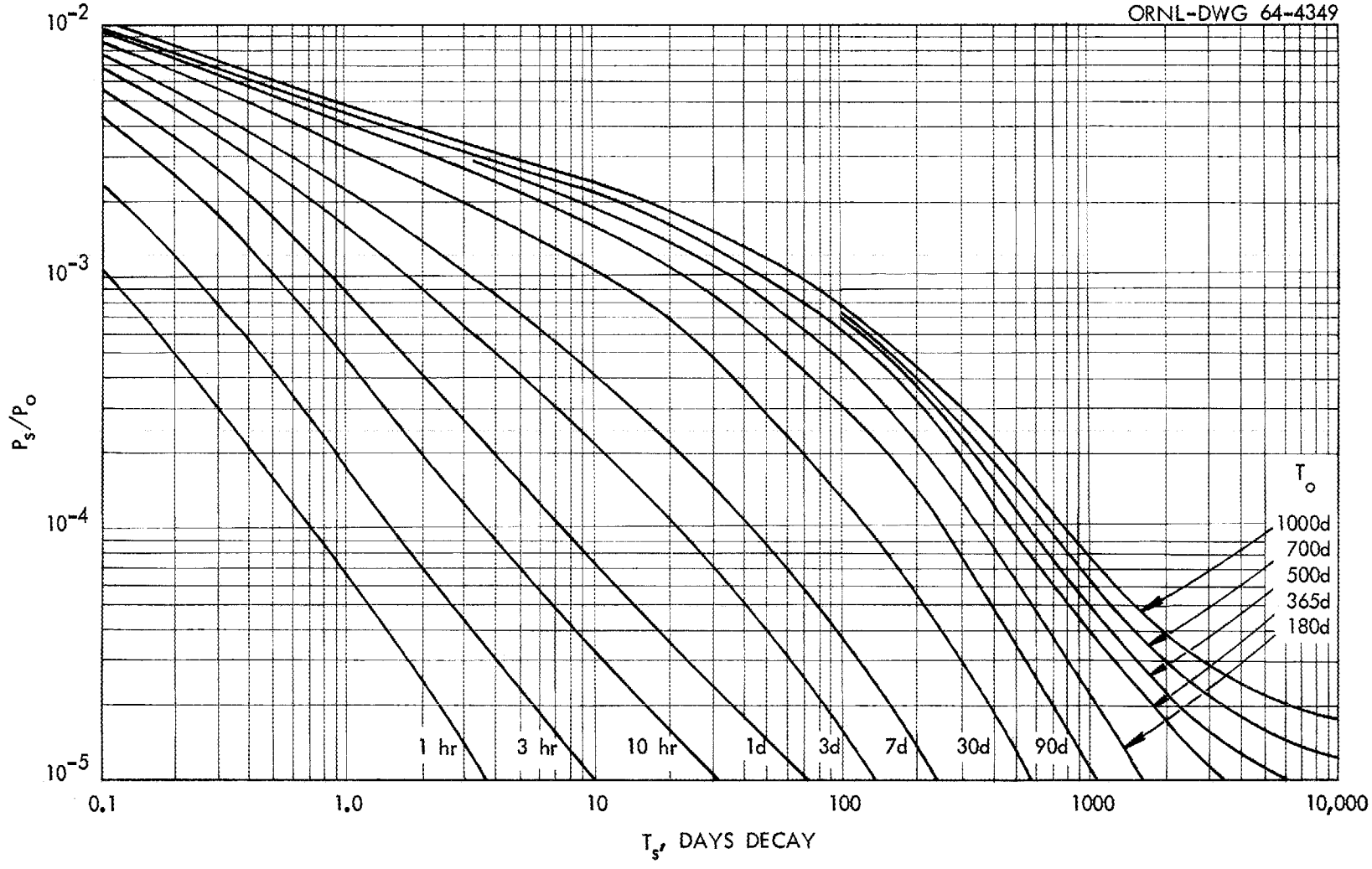

Fig. 5.1. Decay Heat, Q_d, from ^{235}U Fuel as a Function of Operating Power, P_o, Operating Time, T_o, and Decay Time, T_s.

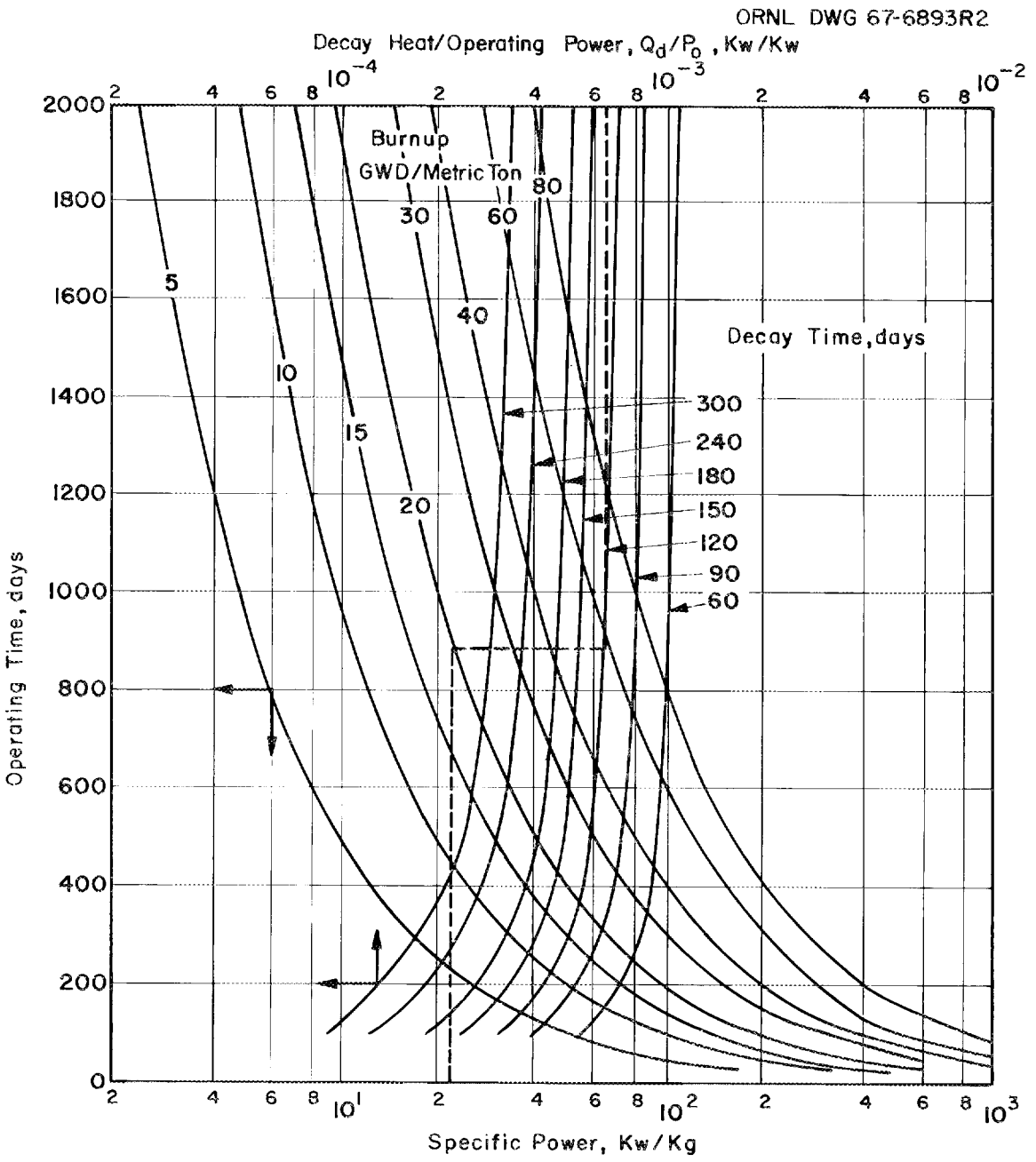

Fig. 5.2. Ratio of Decay Heat to Power for Spent Fuel Elements.

Example: If a reactor has the design characteristics listed below, determine the decay heat of one average fuel assembly that has been allowed to cool for 120 days.

Reactor burnup	20,000 Mwd/metric ton fuel
Reactor fuel loading	4350 kg
Operating power of one reactor	100,000 kw
Number of fuel assemblies	20
Specific power =	$\frac{100{,}000 \text{ kw}}{4350 \text{ kg}} = 23 \text{ kw/kg}$

Applying this data to Fig. 5.2, we obtain a value of 6.5×10^{-4} for the decay heat/operating power ratio. (Note that Fig. 5.2 could be entered from either the ordinate or abscissa.)

Assuming that the operating power of one average fuel assembly is $\frac{100{,}000 \text{ kw}}{20 \text{ assemblies}} = 5000$ kw/assembly, the decay heat may then be computed by:

$$Q_d = (5000 \text{ kw/assembly})(6.5 \times 10^{-4}) = 3.25 \text{ kw/assembly}.$$

In this example, it was assumed that the fuel element was operated at a constant specific power to achieve a burnup of 20,000 Mwd/metric ton. This will not be the case for most power reactor fuel elements; the fuel management scheme will provide a relationship between specific power and burnup which must be taken into account in calculations of decay heat. This effect can be simulated by dividing the fuel cycle into small, constant power burnup steps and using the above method for each burnup increment. The cooling (or decay) time for each burnup step now becomes the time that the element remains in the reactor following the burnup step, plus the cooling time out of the reactor. A simple summation of the decay heats for each burnup step will yield the desired result.

5.2.2 Solar Heat Load

The rate at which the earth intercepts solar energy on a surface normal to the sun's rays at a point above the earth's atmosphere is

442 Btu/hr-ft^2, or 10,600 Btu/ft^2-day; this value, known as the solar constant, increases (decreases) by 3.5% in December (June). The amount of solar radiation received at a point on the surface of the earth on a clear day when the sun is at the zenith varies, but 70% of the solar constant value is generally considered to be sufficiently accurate for engineering purposes.

Total solar radiation is made up of both direct radiation from the sun and diffuse or scattered solar radiation; the latter contribution is small and can be neglected when maximum daytime heating rates are considered.

Values of the solar heat load can be calculated for each surface of the cask. The sum of these values yields the total solar heat load, which is then normally added to the decay heat load to estimate the heat that must be rejected by the cask.

Exact values as a function of latitude, time of day, time of year, tilt of the surface, etc. can be calculated by referring to standard heat transfer texts;[14,15] however, rapid estimation of hourly solar heating rates on clear summer days on variously oriented surfaces[16] may be made by referring to Fig. 5.3.

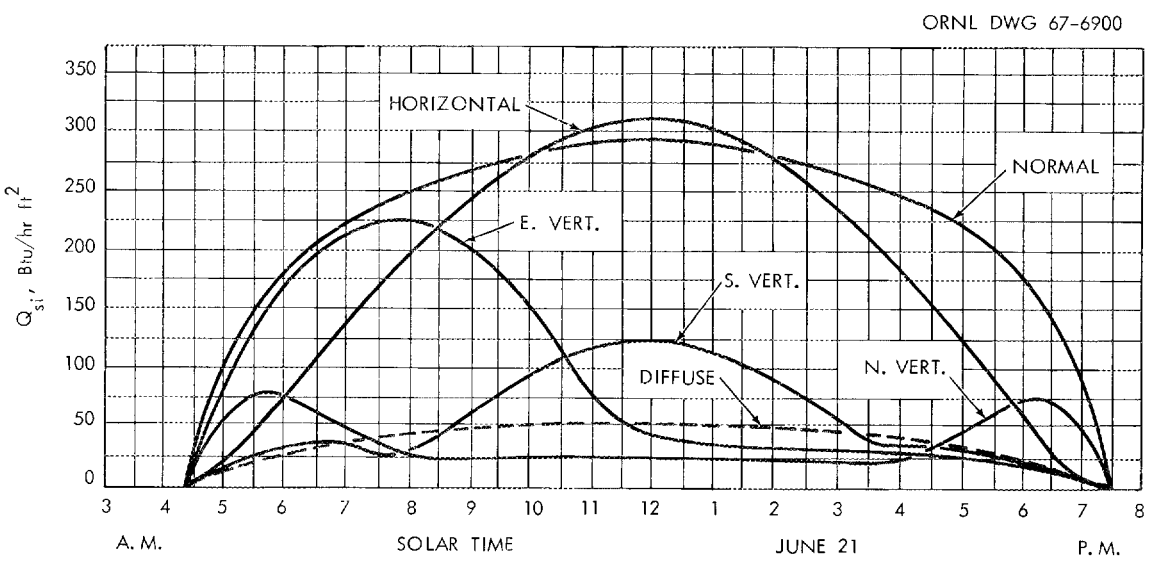

Fig. 5.3. Incident Solar Energy on Clear Days, Latitude 42°N. (ref. 16)

The curves marked N. Vert., S. Vert., and E. Vert. indicate the total amount of solar-plus-scattered radiation that is received by vertical surfaces facing north, south, and east, respectively. The solar energy received by a vertical west wall may be considered as the mirror image of that given for E. Vert. rotated around the 12:00 noon line. The curves marked horizontal and normal indicate the solar energy received by a horizontal surface and a surface that is always normal to the sun's rays.

Each curve, except the one referring to the normal surface, includes the contribution of diffuse radiation to the total heat load; the diffuse radiation for a horizontal surface is separately noted in Fig. 5.3.

Figure 5.4 gives the relative total daily radiation incident on a horizontal or south-facing vertical surface as a function of latitude.[17] Multiplication of the appropriate values from Fig. 5.4 by the 24-hr solar constant (10,600 Btu/ft^2-day) and the local mass transmittance of the earth's atmosphere (~ 0.7) gives the daily incidence on a vertical or horizontal surface. Scattered radiation is not included.

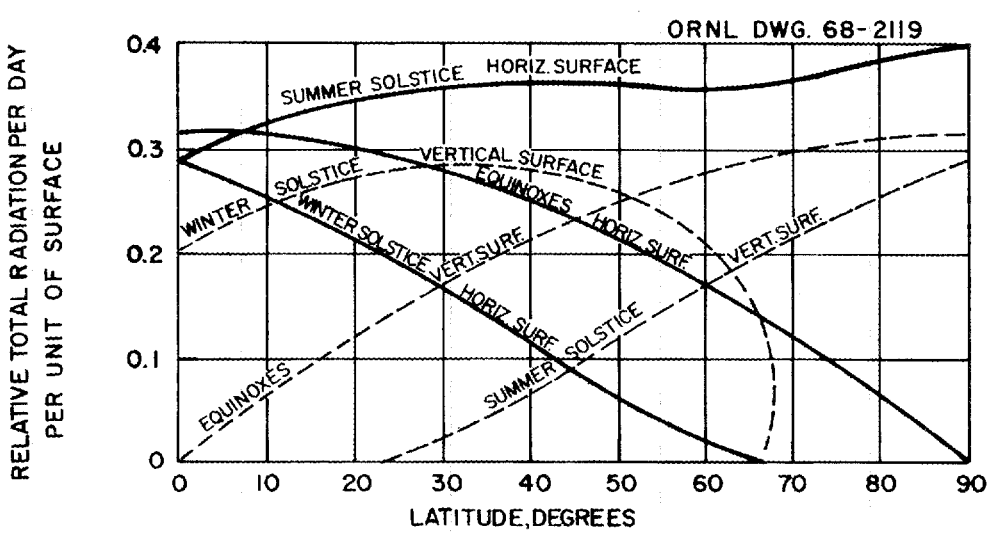

Fig. 5.4. Relative Total Daily Solar Radiation Incident on a Horizontal or South-Facing Vertical Surface as a Function of Latitude. (ref. 17)

To determine the heat load affecting a given surface, the incident heating value, Q_{si}, given in Fig. 5.3 must be multiplied by the absorptivity (or the emissivity), α_{solar}, of that surface; that is, $Q_s = Q_{si}$ (α solar). Values of α are given in Table 5.2.

Note that, for most polished metals, the emissivity (absorptivity) of the surface is higher during exposure to solar radiation than during exposure to lower temperatures or longer-wavelength radiation. There are paints that may be applied to such surfaces to reverse the situation. White zinc oxide paint has a low value of emissivity at solar wavelengths (0.18) but a high emissivity (0.95) at 100°F. This is the ideal situation since a surface that has been freshly painted with zinc oxide paint would absorb little solar radiation, yet would have a high emissivity at lower operating temperatures.

Paints that reflect solar heat are also available. Details of one type can be found in the military paint specification MIL-E-46096 (MR). However, painting of shipping casks is not normally recommended because of operational problems such as decontamination, maintenance of surfaces, etc.

5.3 External Heat Transfer

The analytical procedures described below were developed to analyze heat that is transferred from the external surface of a cylindrical cask and to account for variations in the cask geometry (i.e., the cask may be either finned or unfinned, and may be positioned vertically or horizontally). It is assumed that the container is resting on its shipping skid and is surrounded by essentially stagnant air. Heat is transferred from the cask surfaces by radiation and by natural convection to the environment. At the cask surface and ambient air temperatures normally encountered, the amounts of heat transferred by convection and radiation are significant and neither can be neglected.

The surface area (of a typical cylindrical cask) that is available for rejecting its heat load is not easily defined. The major portion of the total surface area consists of the cylindrical sides which will not

Table 5.2. Emissivities of Various Materials

Material	Temperature 100°F[a]	Temperature Solar[a]
Metals		
Aluminum		
Polished	0.04	.26
Oxidized	0.11	
24-ST weathered	0.4	
Anodized (at 100°F)	0.94	
Chromium		
Polished	0.08	0.49
Iron		
Polished	0.06	0.45
Cast, oxidized	0.63	
Galvanized, new	0.23	0.46
Galvanized, dirty	0.28	0.89
Steel plate, rough	0.94	
Stainless steel		
18-8, polished	0.15	
18-8, weathered	0.85	
Paints		
Aluminized lacquer	0.65	
Cream paints	0.95	
Lacquer, black	0.96	
Lampblack paint	0.96	0.97
Red paint	0.96	0.74
Yellow paint	0.95	0.30
Oil paints (all colors)	0.94	
White (ZnO)	0.95	0.18

[a]See refs. 14 and 15.

be uniformly effective in transferring heat because a portion of the surface may be either in contact with, or facing, a solid surface (the vehicle deck) of indeterminate temperature and surface emissivity. This is particularly true when the cask is designed to be shipped with its major axis oriented horizontally. Occasionally the ends of the cask are neglected when external heat transfer is considered, although under some circumstances they could reject a significant fraction of the heat load.

A finned surface on a cask is quite common, particularly for casks capable of dissipating large heat loads. The fins are designed to be either circumferential or longitudinal, depending on the expented orientation of the cask during shipping.

5.3.1 Heat Removal from a Cask Surface

The basic equation that describes convection and radiation from a cask surface is:

$$Q_T = h_c A_c (T_s - T_a) + 0.173\ \overline{F}_{12} A_r \left[\left(\frac{T_s + 460}{100} \right)^4 - \left(\frac{T_a + 460}{100} \right)^4 \right] , \qquad (5.1)$$

where

Q_T = total heat transferred, Btu/hr,

h_c = the convective heat transfer coefficient, Btu/hr-ft^2-°F,

A_c = the effective convective surface area, ft^2,

A_r = the effective radiative surface area, ft^2,

T_s = the cask surface temperature, °F,

T_a = the ambient temperature, °F,

$\overline{F}_{12}$ = the gray-body shape factor.

This equation, which assumes a uniform cask surface temperature, cannot easily be expressed parametrically owing to the difference in A_c and A_r. However, if the cask is unfinned, $A_c = A_r = A$, and Eq. (5.1) can be simplified to:

$$Q_T = h_t A\ (T_s - T_a) , \qquad (5.2)$$

where h_t accounts for both convection and radiation.

The following stepwise procedures, which treat both unfinned and finned types of shipping container, are recommended for calculating the heat that is rejected from the cask surface to the environment under normal conditions.

Analysis of an Unfinned Cask. — If the total heat load of an unfinned cylindrical cask is known, determination of the external surface temperature, T_s, involves a trial-and-error solution of Eq. (5.1), with $Q_T = Q_d + Q_s$ (Q_d is the decay heat and Q_s is the solar heat load). The procedure is as follows:

1. Compute the Heat Transfer Area. — If we neglect the ends of an unfinned cask, the areas available for the rejection of heat by convection and radiation are equal and are given by:

$$A_c = A_r = A = \pi D_o L \ . \tag{5.3}$$

2. Assume a Cask Surface Temperature, T_s.

3. Determine the Heat Transfer Coefficient. — McAdams[18] recommends the simplified dimensional equation (for cylinders or plane surfaces in air under turbulent conditions),

$$h_c = C\ (T_s - T_a)^{1/3} \ , \tag{5.4}$$

where C is assigned the value of 0.19 for vertical planes and cylinders, 0.18 for horizontal cylinders, and 0.22 for heated plates facing up. The value of h_c, calculated by Eq. (5.4), can be used under laminar flow conditions with only a slight loss of accuracy.

It is convenient to determine an equivalent radiant heat-transfer coefficient so that a total heat-transfer coefficient may be computed as follows:

$$h_t = h_c + h_r \ . \tag{5.5}$$

The heat transferred by radiation can be expressed by the equation:

$$Q = h_r A\ (T_s - T_a); \tag{5.6}$$

then by setting Eq. (5.6) equal to the second term on the right side of Eq. (5.1), the effective radiant heat-transfer coefficient may be calculated by:

$$h_r = 0.173\bar{F}_{12} \frac{\left[\left(\frac{T_s + 460}{100}\right)^4 - \left(\frac{T_a + 460}{100}\right)^4\right]}{T_s - T_a} . \tag{5.7}$$

If the surroundings are large as compared with the cask, then $\bar{F}_{12}$ may be approximated by ε, the emissivity of the cask surface. After substituting ε for $\bar{F}_{12}$, the solutions to Eq. (5.7) and Eq. (5.4) are plotted in Fig. 5.5 as a function of $(T_s - T_a) = \Delta T$.

4. Find the Surface Emissivity. The proper value of ε may be selected from Table 5.2.

5. Solve Equation (5.2). Select a T_s to determine ΔT; then, with the ε determined above, find h_c and h_r from Fig. 5.5. Add these coefficients, as in Eq. (5.5), and evaluate Eq. (5.2) using the assumed ΔT. If the Q_T that is determined in this manner does not equal $Q_d + Q_s$, steps 3 through 5 must be repeated assuming a different value for T_s.

Analysis of a Finned Cask. – For finned casks, the procedure to be used for the prediction of the cask surface temperature is more involved. The recommended trial-and-error procedure is as follows:

1. Compute the Heat Transfer Area. The area for convection does not equal the area for radiation in the case of finned casks. For the cask shown in Fig. 5.6:

$$A_c = (\pi D_o - n_f y_o)\ L + \eta n_f\ (2\ell L') , \tag{5.8}$$

where

D_o = cask outer diameter, ft

n_f = number of fins

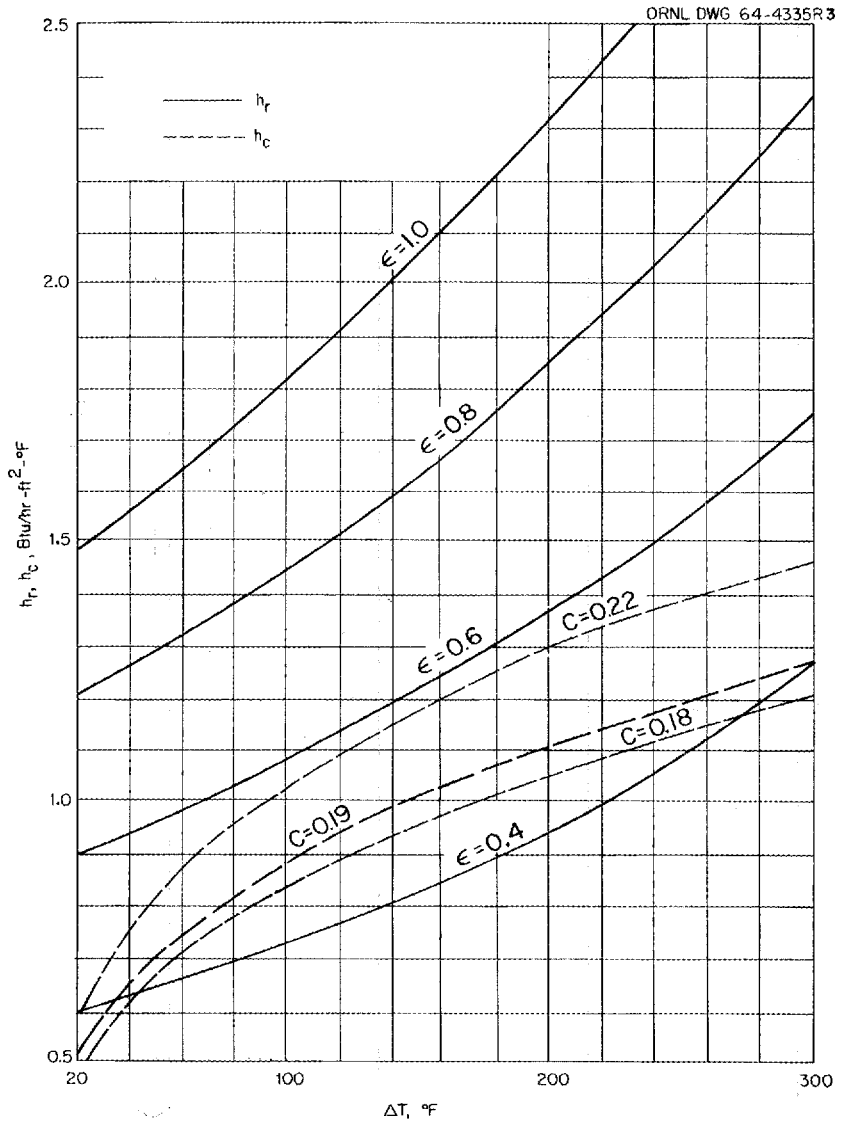

Fig. 5.5. Convective and Radiative Heat Transfer Coefficients as a Function of ΔT when T_a = 130°F.

y_o = fin thickness, ft,

L = cask length, ft,

η = fin efficiency (see step 5),

ℓ = fin height, ft,

L' = fin length, ft.

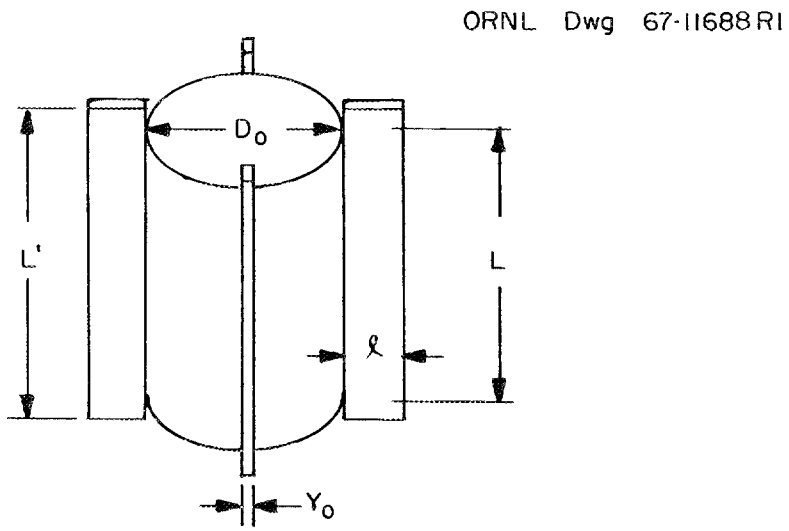

Fig. 5.6. Longitudinally Finned Cask Oriented Vertically.

For a cask with circumferential fins of rectangular profile oriented horizontally (see Fig. 5.7),

$$A_c = \pi D_o \ (L - n_f y_o) + 2\pi \ (r_L^2 - r_o^2) \ n_f \ \eta_c \ , \qquad (5.9)$$

where

η_c = fin efficiency for circumferential fins.

Equations (5.8) and (5.9) imply that the effective convection and radiation area is independent of fin spacing. Although this is not actually

true, the error incurred in neglecting the spacing effect is within the accuracy expected in this calculation.

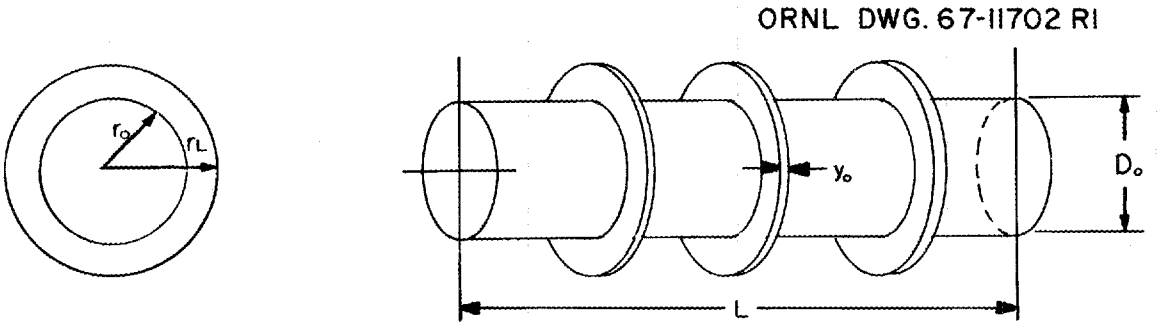

Fig. 5.7. Circumferentially Finned Cask Oriented Horizontally.

The radiative heat transfer area of the finned cask is assumed to be the "string" area of the cask; this is the area of the total cask envelope, which, irrespective of the type of fin, can be calculated by:

$$A_r = \pi \, (D_o + 2\ell) \, L \; . \tag{5.10}$$

2. Determine the Effective Emissivity. Since, for finned casks, the sides are considered cavity-type radiators,[19]

$$\varepsilon = \frac{1}{1 + \frac{s}{S}\left(\frac{1}{\varepsilon_r} - 1\right)} \; , \tag{5.11}$$

where

ε_r is the surface emissivity of the cask shell and fins,

s is the average face-to-face distance between fins, and

S is defined as:

$$S = s + 2\ell \; . \tag{5.12}$$

Typical values for ε_r are given in Table 5.2.

3. Assume a Cask Surface Temperature, T_s.

4. Determine the Convective Heat Transfer Coefficient. Use Fig. 5.5.

5. Calculate the Fin Efficiency as Indicated in Step 5 for Finned Casks. The useful heat transfer area is dependent on the fin efficiency η, which, in turn, depends on the convective heat transfer coefficient. Figure 5.8 is based on the following two equations[20] for longitudinal fins and can be used for any materials of construction:

$$\eta = \frac{\tanh(b)}{b} , \tag{5.13}$$

where

b = fin parameter $= \ell \sqrt{\frac{2h_c}{ky_o}}$, and

k = the thermal conductivity of the fins.

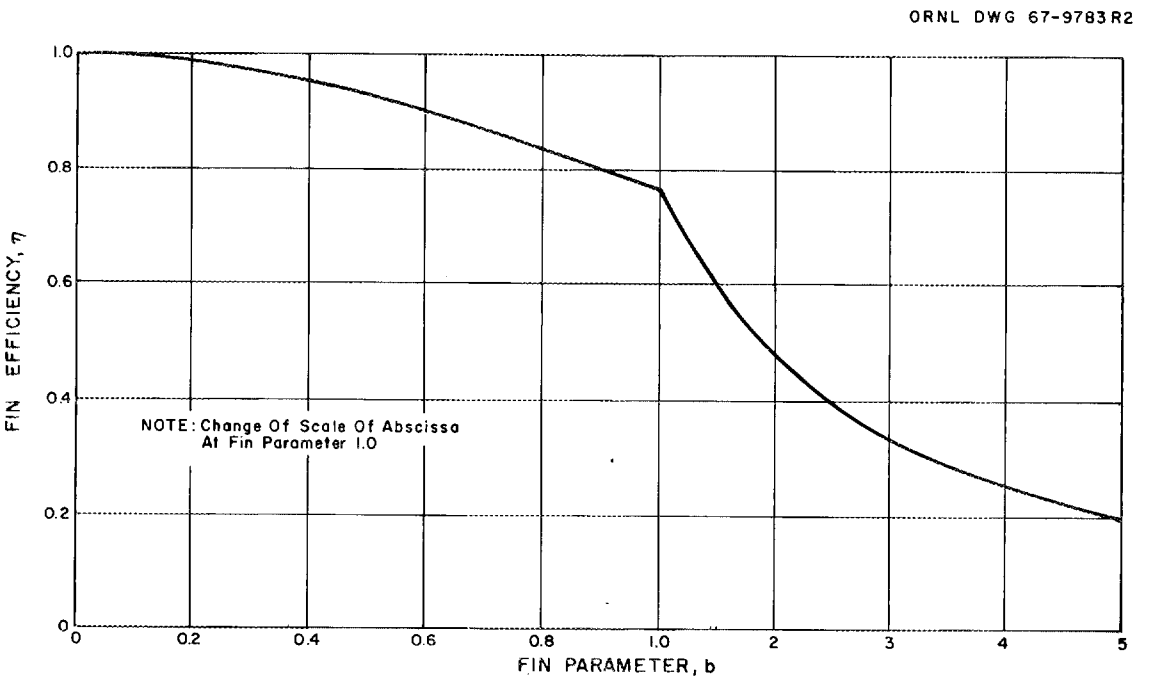

Fig. 5.8. Fin Efficiency for Straight Fins of Rectangular Cross Section vs Fin Parameter.

Figure 5.9 can be used to determine η for stainless steel fins by first calculating b/ℓ and, if ℓ is known, then computing b. Substituting b in Eq. (5.12) (or utilizing Fig. 5.8) will yield a value for η.

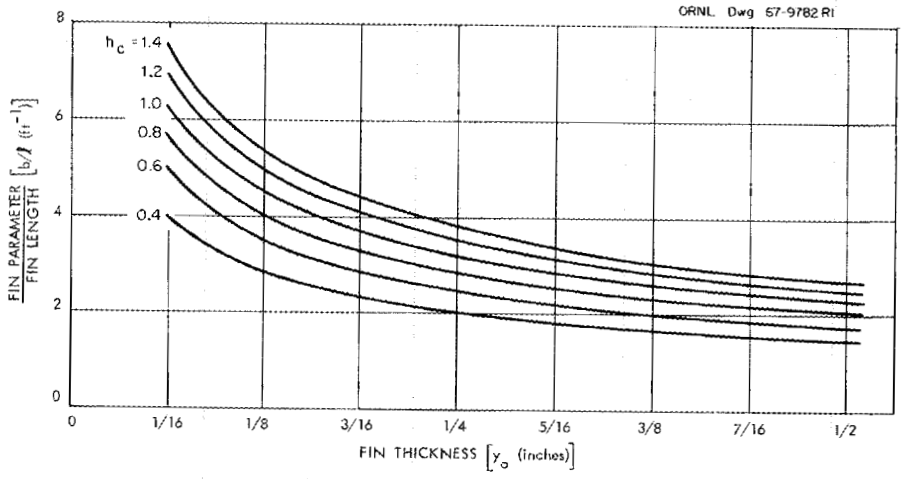

Fig. 5.9. Graph of (Fin Parameter/Fin Length) for Longitudinal Fins of Rectangular Profile, 304 Stainless Steel.

If circumferential fins of rectangular profile are used, a correction factor, $\Delta\eta$, must be added to Eq. (5.14) (see Fig. 5.10); that is

$$\eta_c = \eta + \Delta\eta \ . \tag{5.14}$$

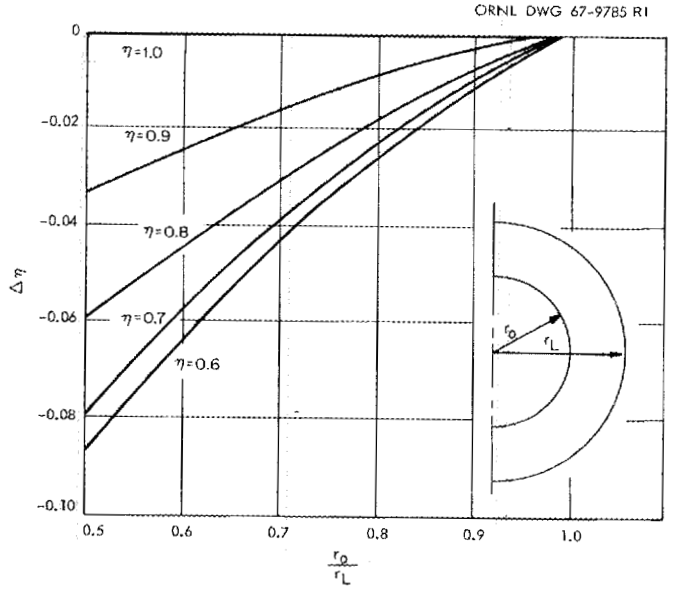

Fig. 5.10. Reduction Term $\Delta\eta$ for Circumferential Fins of Rectangular Profile. $\eta_c = \eta + \Delta\eta$.

After η and/or η_c has been determined, the calculations can be completed since the convective and radiative heat transfer areas have been completely determined.

6. Solve Eq. (5.1). If the value obtained by solving Eq. (5.1) does not equal $Q_d + Q_s$, a new surface temperature must be chosen and steps 3 through 6 repeated until $Q_T = Q_d + Q_s$.

Example using Heat Transfer Equations. Assume that the surface temperature of a circumferentially finned cask must be determined. The cask is designed to transport two fuel elements from a reactor whose characteristics are described in the example of Sect. 5.2.1. Suppose that the cask has the following characteristics:

Material of construction (outer shell and fins) ... 304 SS

Outside diameter of cask, D_o ..... 3 ft

Radius from cask center to tip of fin, r_L ..... 1.75 ft

Radius from cask center to base of fin, r_o ..... 1.50 ft

Cask length, L ..... 9 ft

Number of fins, n_f 54

Fin length, ℓ ..... 0.25 ft (3 in.)

Fin thickness, y_o ..... 0.0208 ft (0.25 in.)

Approximate fin spacing (center to center) ..... 0.167 ft (2 in.)

Fin width, L' ..... 9 ft

First, the heat load, $Q_d + Q_s$, should be calculated. From the example in Sect. 5.2.1 for fuel cooled 120 days, Q_d = (2 assemblies) (3.25 kw/assembly) = 6.50 kw.

The solar heat load, Q_s, varies with the season, the latitude, the weather, etc. Assuming that the cask will be transported at a latitude of 42° during the summer solstice, an average heat load can be calculated.

Because of the cyclic nature of the solar heat load and the large thermal capacity of spent fuel shipping casks, it seems reasonable to average the total load over 24 hr.

Integrating the curve denoted as "normal" in Fig. 5.3 gives 3445 Btu/ft^2-day; this equals 144 Btu/ft^2-hr or 42 w per square foot of projected cask surface. The total solar heat load is, therefore, (3 ft) (9 ft) (0.042 kw/ft^2) = 1.1 kw.

Proceeding step by step, as previously indicated for a finned cask:

1. From Eqs. (5.9) and (5.10),

$$A_c = \pi(3)[9 - 54\ (0.0208)] + 2\pi\ (1.75^2 - 1.50^2)\ 54\eta_c$$

$$= 74.3 + 276\ \eta_c\ \text{ft}^2$$

$$A_r = \pi(3 + 2 \times 0.25)9$$

$$= 99\ \text{ft}^2$$

2. Determine the effective emissivity using Eq. (5.11).

$$s = 2 - 0.25 = 1.75\ \text{in.}^2/\text{in.}$$

$$S = 1.75 + 2(3) = 7.75\ \text{in.}^2/\text{in.}$$

$$\frac{s}{S} = \frac{1.75}{7.75} = 0.226$$

A value for ε_r may be obtained from Table 5.2 or other suitable reference. For partially weathered stainless steel:

$$\varepsilon_r = \simeq 0.5\ .$$

Thus,

$$\frac{1}{\varepsilon_r} - 1 = 1\ ;$$

and from Eq. (5.11),

$$\varepsilon = \frac{1}{1 + 0.226} = 0.814\ .$$

3. Assume $T_s = 200°F$.

4. Since $T_a = 130°F$, $\Delta T = 70°F$, and, from Fig. 5.5,

$$h_c = 0.781 \ .$$

5. From Fig. 5.9, for $y_o = 1/4$ in. and $h_c = 0.781$,

$$\frac{b}{\ell} = 2.8 \ ft^{-1} \ ;$$

hence

$$b = 2.8 \ (0.25) = 0.700 \ .$$

Using Fig. 5.8 for $b = 0.700$,

$$\eta = 0.87 \ .$$

From the cask geometry,

$$\frac{r_o}{r_L} = \frac{1.50}{1.75} = 0.857 \ .$$

From Fig. 5.10 for $\eta = 0.87$ and $r_o/r_L = 0.857$,

$$\Delta\eta = -0.007 \ .$$

Making the correction for circumferential fins,

$$\eta_c = 0.870 - 0.007 = 0.863 \ ;$$

thus,

$$A_c = 74.3 + 276 \ (0.863) = 312.5 \ ft^2 \ .$$

6. From Eq. (5.1), the solution for Q_T yields:

$$Q_T = (0.781)(9312.5)(200 - 130) + 0.173 \ (0.814)(99.0)[6.6^4 - 5.9^4]$$

$$Q_T = 26{,}647 \ Btu/hr = 7.81 \ kw \ .$$

Since $Q_T = Q_d + Q_s = 6.50 + 1.1 = 7.6$ kw, the cask surface temperature is slightly lower than the 200°F value assumed. By repeating steps 3 through 6, a temperature of 199°F is found to dissipate the requisite amount of heat.

5.4 Internal Heat Transfer

Present regulations do not place a limit on the maximum temperature of a spent fuel element during transport. What they do require is that, under normal conditions of transport, no radioactive material be released from the containment vessel. Under the hypothetical accident conditions, some activity release, up to specified limits, may be tolerated. It is, therefore, prudent to keep fuel element temperatures as low as possible and, if coolant is lost, below temperatures which are capable of causing cladding failure.

It is worth noting that the regulations do not require a loss-of-coolant assumption; however, if fuel temperatures are calculated by assuming that the coolant will be retained under accident conditions, the assumption will have to be fully justified in the accident analysis of the cask.

The internal heat transfer analysis involves consideration of the transfer of the decay heat (generated in the fuel elements) through the fuel cladding, the primary coolant region, the cask inner shell, the biological shield region, and the cask outer shell.

For calculations of this type, water, the usual liquid coolant, is often considered to be absent since it may be difficult to guarantee the retention of coolant under accident conditions and it is important to know the maximum temperature that will be reached under loss-of-coolant conditions.

In some cases it will be desirable to enclose each fuel element in a canister, although canned fuel elements often impose economic penalties. Such a canister becomes the primary line of containment, and the cask's main purpose is then to shield and transfer heat, and to provide a secondary line of containment. This system has the disadvantage of increasing the temperature difference between the fuel and the cask surface for a given amount of heat that must be transferred; however, the increased capability of containing the radioactive material may offset this. Presently, few cask designs employ this containment philosophy.

In order to investigate the effects of changing several possible parameters on the heat transfer inside a cask cavity, Battelle Memorial Institute calculated temperatures of an array of fuel elements contained in a lead-shielded spent fuel shipping cask. Their data were developed using the heat transfer computer code THTC,[21] which considers conductive, convective, and radiative heat transfer simultaneously and determines steady-state temperature distributions by a relaxation technique.

The overall geometry upon which the nodal network was based (see Fig. 5.11) was defined as a 45° wedge with two adiabatic boundaries. This system permits simultaneous radiative, conductive, and convective coupling throughout the cavity and biological shield. The external ambient conditions were assumed to be 130°F. An emissivity and a solar absorptivity each equal to 0.5, were chosen for the exterior cask surface.

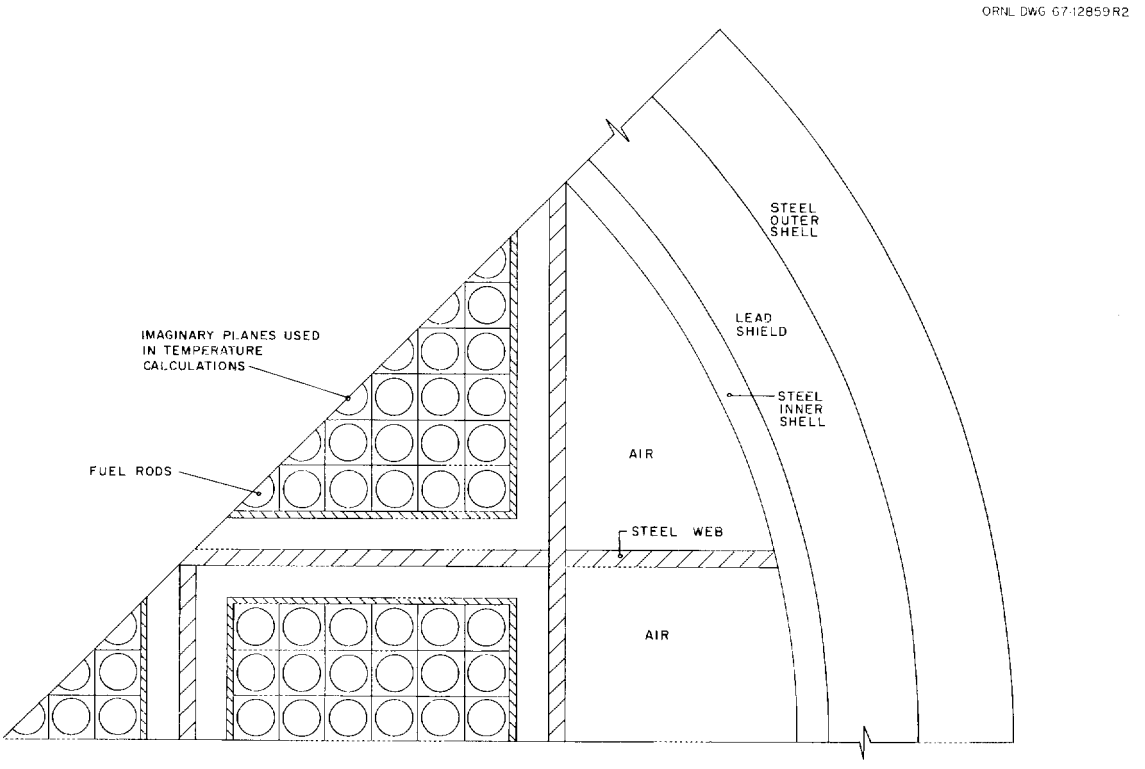

Fig. 5.11. Thermal Nodal Model Used as Basis for Loss of Coolant Investigations.

The study for a 3 x 3 fuel assembly array assumed the following conditions: (1) loss of all liquid coolants, (2) steady-state conditions, and (3) uniform heat generation per fuel rod.

Figure 5.11 depicts a schematic drawing of one case in which the cask contains nine fuel assemblies per cask and each assembly contains thirty six 0.55-in.-diam fuel rods having a center to center spacing of 0.72 in.

A second case was studied in which the number of fuel rods was increased to 144 per fuel assembly; each rod had a diameter of 0.20 in. and a center-to-center spacing of 0.40 in. The cask radius in this instance is only about 1 in. greater than that in the first case. Data indicating the maximum temperature of the centermost fuel rod as a function of linear heat generation in the rods is shown in Fig. 5.12.

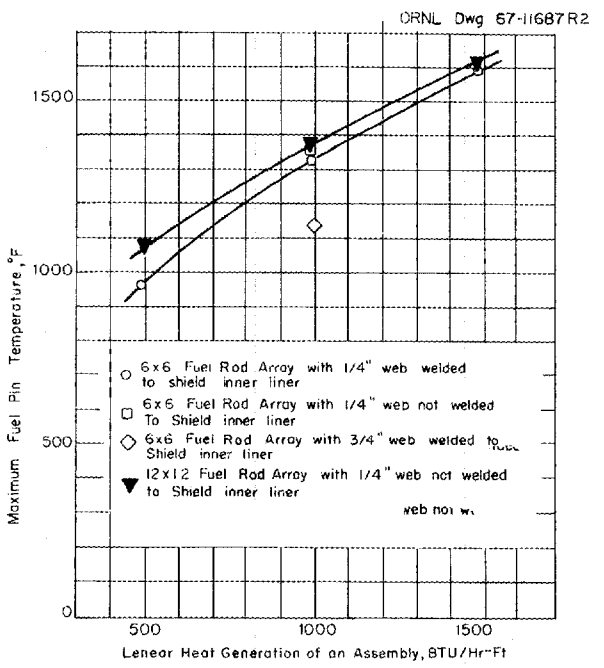

Fig. 5.12. Maximum Temperatures as a Function of Linear Heat Generation.

Pertinent conclusions that may be drawn from the data are:

1. As the heat generation rate per unit length increases, the maximum fuel rod temperature increases exponentially to approximately the 0.43 power.

2. Welding of the basket web to the cask shield inner liner (or inner shell) apparently does not significantly affect the maximum rod temperatures.

3. Increasing the basket web thickness from 1/4 in. to 3/4 in. results in a significant decrease in maximum rod temperature; this decrease was about 200°F for the case analyzed.

4. If the fuel assembly linear heat generation rate is constant, an increase in the number of fuel rods in the assembly (keeping the fuel assembly approximately the same size) does not significantly increase the maximum rod temperature. One of the reasons for this is that, as the number of rods per fuel assembly increases, the heat source per rod decreases proportionally.

Note that the temperatures presented in Fig. 5.12 are equilibrium loss-of-coolant temperatures. The time required to attain these temperatures may vary from hours to days, depending upon the cask geometry, the heat capacity, and the heat load from the fuel elements. It may be possible to show that corrective action can be taken before equilibrium temperatures can be reached; in such instances, temperatures below equilibrium values may be used when the fuel cladding creep rupture strength is analyzed.

5.4.1 Calculation of Fuel Rod Temperature

The fuel rod temperatures determined above (under loss of coolant conditions) were calculated by using the THTC code. This code can be expected to give reasonably accurate data although it is sophisticated enough to require the assistance of a programmer knowledgeable in the code.

Watson has developed an applicable code that is simple and rapid but assumes that heat is transferred by radiant exchange only.[5] The fuel element assembly which is examined must have an even number of fuel rods in a square array. Input data consist of the number of rods in each row,

the wall temperature, the heat generation rate, the pin emissivity, the tube radius, and configuration factors; values for the latter factors are given in ref. 5. The code can calculate the steady-state temperature distribution for an 8 x 8 fuel pin array in less than 15 sec, using the IBM 7090. The time will increase exponentially with the number of rods in the fuel assembly.

This code, generally gives conservative results for low linear heat generation rates. At high heat generation rates, non-conservative results are obtained because of the method used for calculating the grey body factor. These factors can better be calculated using the method outlined by Klepper[38] and can, with a little effort, be used to modify Watson's code.

5.4.2 Fuel Rod Failure Temperatures

The shipping cask and fuel element temperature calculations must be combined with a fuel rod failure analysis to determine whether the release due to fuel rod failures under accident conditions is less than that imposed by the regulations. The objective of such an analysis is to ascertain the amount of time a power reactor fuel element must remain in the on-site spent fuel pool before being shipped. As this cooling time prior to shipping increases, the chance of fuel rod rupture (and consequent release of radioactivity) during an accident decreases. However, economic considerations dictate that the fuel should be shipped as quickly as possible. The following analysis will illustrate one method for determining the minimum cooling time that is required for shipping spent fuel for a typical power reactor fuel assembly.

The cause of fuel rod cladding failure during shipment is likely to be overheating due to inadequate heat removal. At the higher temperatures, internal gas pressure from gaseous fission products may cause stresses that exceed the strength of the cladding material at those temperatures. The fuel elements can, therefore, be assigned a "failure temperature," which is defined as the temperature at which the cladding is expected to rupture, thereby exposing the contained fuel and fission

products to their environment. This temperature will determine the length of time that the discharged fuel must remain at the reactor site prior to shipping and will thus affect the economics of the fuel cycle. If the cask cannot be guaranteed to remain sealed during exposure to the accident conditions specified in the regulations, then any fission products that contaminate the coolant can be released to the environment; the release limits are given in Table 5.1.

The temperature at which a fuel rod fails is dependent upon the pressure that is generated inside the fuel rod; in turn, the pressure generated inside the fuel rod is dependent upon the following:

(1) Amount of fission gases released from the fuel during irradiation.

(2) Internal void volume which has been designed into the fuel element to accommodate the released fission gases.

(3) The temperature of contained gas after liquid coolant is lost. This temperature is assumed to be equal to the maximum cladding temperature.

(4) The ductility of the cladding.

This temperature can be estimated by the following analysis:

The hoop stress in a long, thin-walled cylinder, such as the fuel rod cladding, is given by:

$$\sigma = \frac{PD}{2t} , \tag{5.15}$$

where

P = internal pressure, psia,

D = rod diameter, in.,

t = wall thickness, in.

The internal gas pressure, p, in the fuel rods may be calculated from the following equation:

$$P = (P'f + P_o) \frac{T}{T_o} , \tag{5.16}$$

where

P = total gas pressure, psia,

P' = pressure at T_o resulting from 100% release of gases from pellets,

f = fraction of gases released from pellets to plenum,

P_o = initial fill pressure at T_o,

T/T_o = ratio of existing to base temperature, °R.

The value of P' can be estimated[37] using the perfect gas law

$$P' = \frac{1.45\ ERTo}{V'} \tag{5.17}$$

where

1.45 = total gas generation, gm atoms/GWD,

E = exposure, GWd/metric ton,

R = gas law constant,

= 40.84 psia - in.^{3}/gm-mole °R,

T_o = specific gas collection volume, in.^{3}/metric ton

The number of mols of fission gas generated in fuel rods, assuming only stable isotopes of xenon, krypton, and iodine are important, was found to be independent of specific power and cooling time and dependent only on the total burnup in the fuel. The gas volumes shown in Table 5.3 were calculated without allowance for the volume displaced by springs, etc., and without allowance for pellet dishing on the ends. They are characteristic of the fuels presently being designed. The diametral gap volume is assumed to be the cold clean gap.

The fraction of fission product gases released from the pellets, f, contributes to the pressure buildup in fuel rod volume available for gas accumulation. This fraction may be estimated from Fig. 5.13 in which is plotted the percent fission gas released vs the local linear heat generation rate.[31] The release is a function of the local operating temperature of the fuel which has been correlated with the local linear heat generation rate; the correlation appears to be well within required accuracy.

ORNL DWG 69-8424

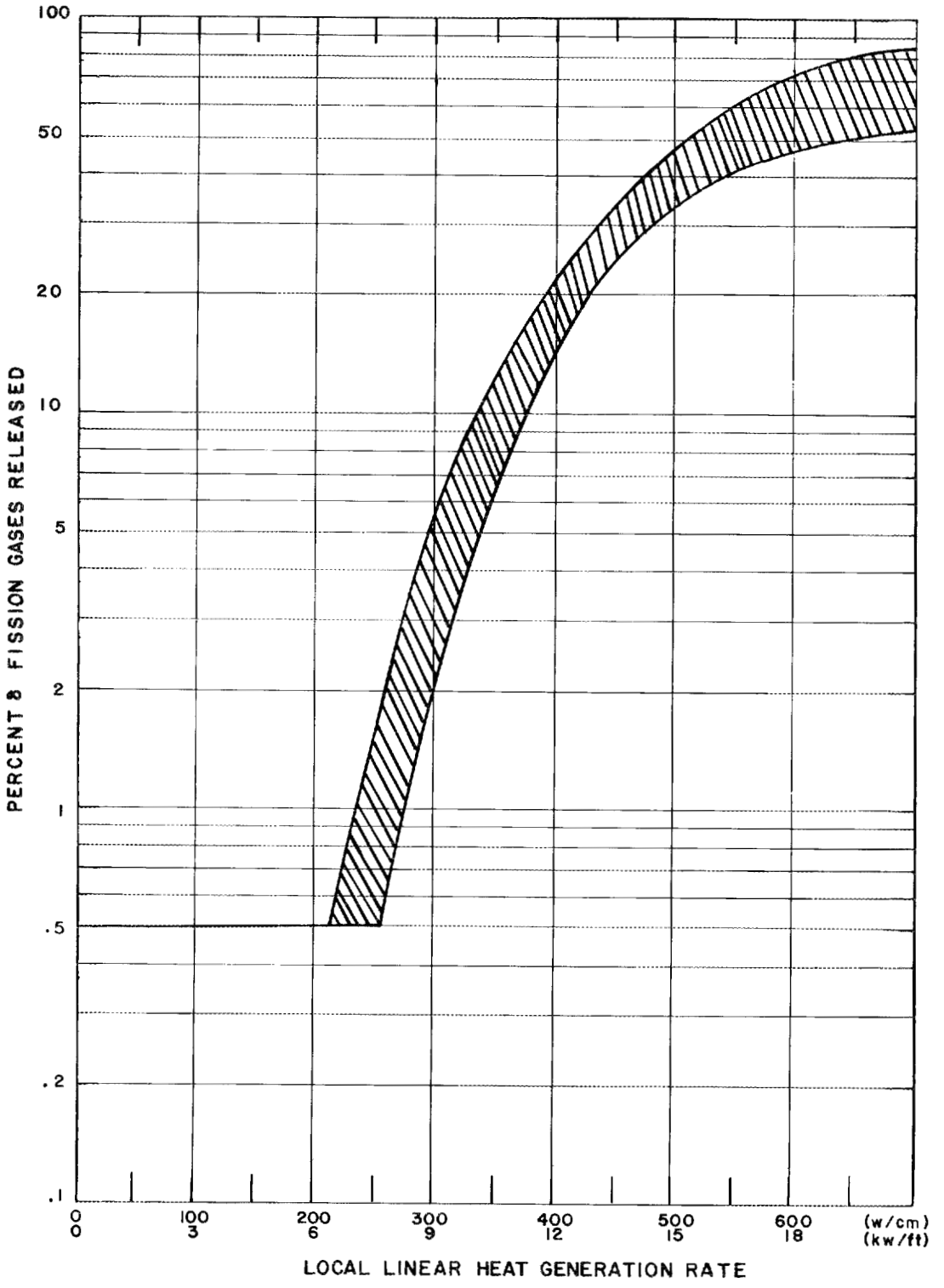

Fig. 5.13. UO_2 Pellet Fuel Fission Gas Release.

Table 5.3. Fuel Pin Gas Collection Volumes[37]

Fuel	Without Diametral Gap		With Diametral Gap	
	V in.^{3}	V' in.^{3}/ metric ton	V in.^{3}	V' in.^{3}/ metric ton
BWR-65, 66	2.14	532	3.24	805
BWR-67	3.115	785	4.22	1065
PWR-Cy	.344	162		
PWR-Diablo Canyon	.478	213	1.03	460
PWR-Rancho Seco	.93	425	1.42	650
PWR-Calvert Cliffs	.706	351	1.20	596

V = Volume per fuel pin

The horizontal line below approximately 250 watts/cm is caused by gas buildup due to recoil nuclei and occurs no matter what operating temperature exists in the reactor. The spread of data is caused primarily by variations in the UO_2 pellet density and local temperature variations. Figure 5.13 provides a reasonable estimate of the fraction of gas released and can be used to estimate the pressure buildup as a function of fuel element temperature. Information found in ref. 32 indicates that, within the range of data shown, the level of burnup of the fuel appears to have no effect on the fractional fission gas release.

In order for the fuel cladding to rupture, the internal pressure must exceed some critical value. Estimates of the stress properties for Zircaloy-4, and 347 stainless steel as a function of temperature are given in Fig. 5.14. (The curves for Zircaloy-4 can be applied to Zircaloy-2). Unirradiated material properties were used for these metals since irradiation affects will be annealed out at temperatures above 800°F. if the nvt is less than 10^{22}. For higher nvt values there is an indication, as yet not quantitative, that some material properties may be permanently affected.

ORNL DWG 69-8419 R1

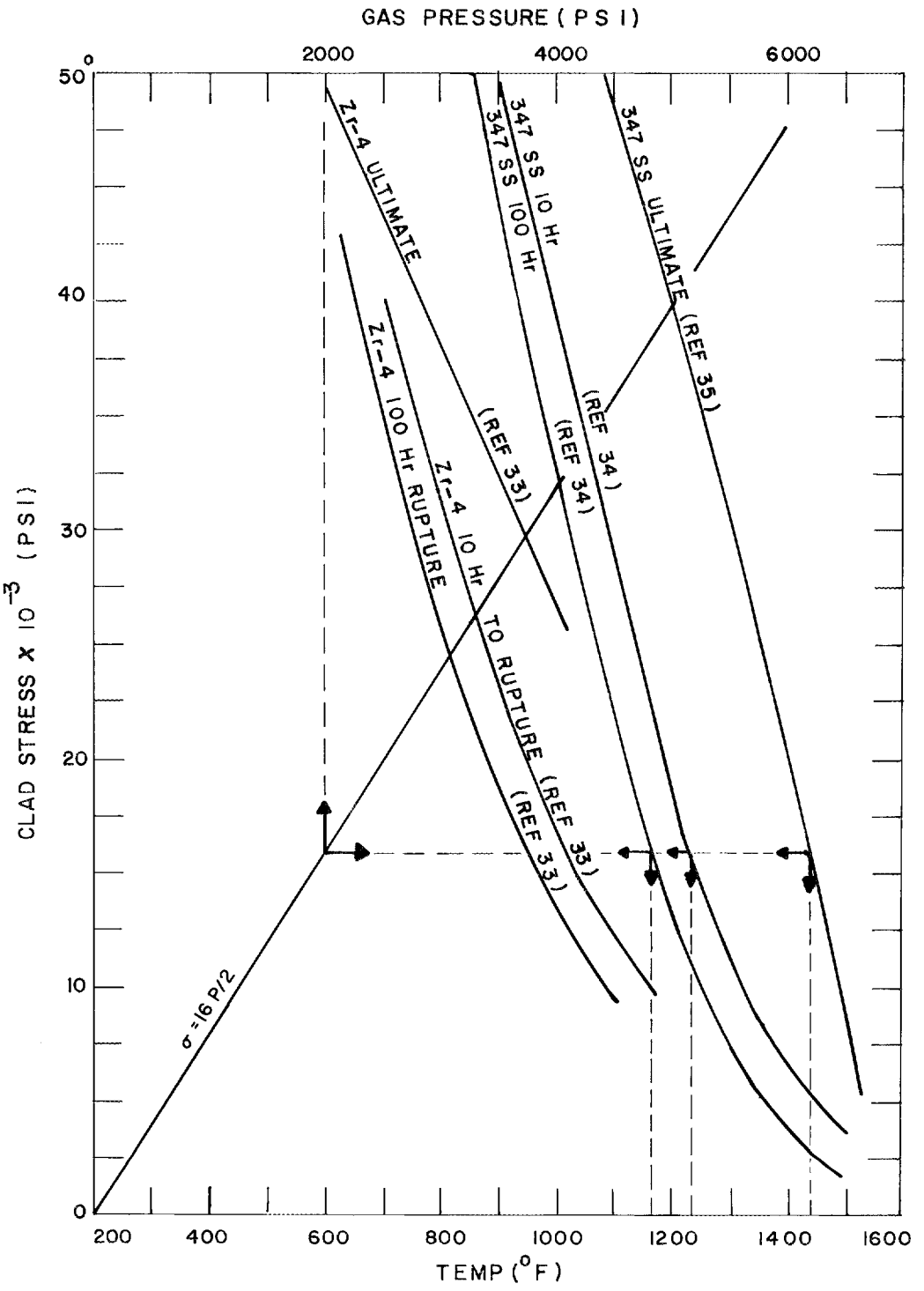

Fig. 5.14. Creep-Rupture Data for Stainless Steel and Zircaloy Tubing.

In order to predict the temperature at which the cladding will rupture, the strength of the cladding at specific temperatures must be known as a function of internal gas pressure. This can be estimated by plotting the clad stress produced as a function of internal gas pressure [using Eq. (5.15)] on a graph of clad stress plotted as a function of temperature. A temperature-pressure plot of critical strength properties may be made from these data as demonstrated by the solid lines in Fig. 5.15 which were derived from Fig. 5.14. (Note that Fig. 5.15 applies to rods whose D/t ratio is 16.)

The buildup of pressure as a function in temperature was plotted as a dotted line in Fig. 5.15 by using Eq. (5.16). The interpretation of the creep rupture curves in Fig. 5.15 is as follows: If the temperature-pressure relationship in the fuel rod cladding is held at any point on the creep rupture curve for the appropriate number of hours, the cladding will rupture. A family of curves is presented to show the effect of the time that the cladding is held at the increased temperature condition. The intersection point between the fuel rod pressure curve and the creep rupture curve of interest defines a limiting cladding temperature below which no rupture is expected to occur during the time of creep rupture. The cladding temperature for the example is the equilibrium loss-of-coolant temperature.

At this point Fig. 5.16 can be plotted, which shows the decay heat vs cladding temperature for the conditions assumed in the cask cavity. If it is desirable that no fuel rods rupture under loss-of-coolant conditions, then the desirable maximum temperature limit (as determined from Fig. 5.15), when applied to Fig. 5.16 at the point of hottest center rod, will indicate the maximum decay heat allowed in the cask such that the hottest center rod will not exceed the rupture temperature limit.

If a certain number of rods could be allowed to rupture (and still meet permissible contamination limits of the coolant), the cooling time of the fuel could be shortened to account for the increased decay heat limit. The following example will illustrate the use of these curves in evaluating the minimum time that the first load of fuel elements must be cooled prior to shipping.

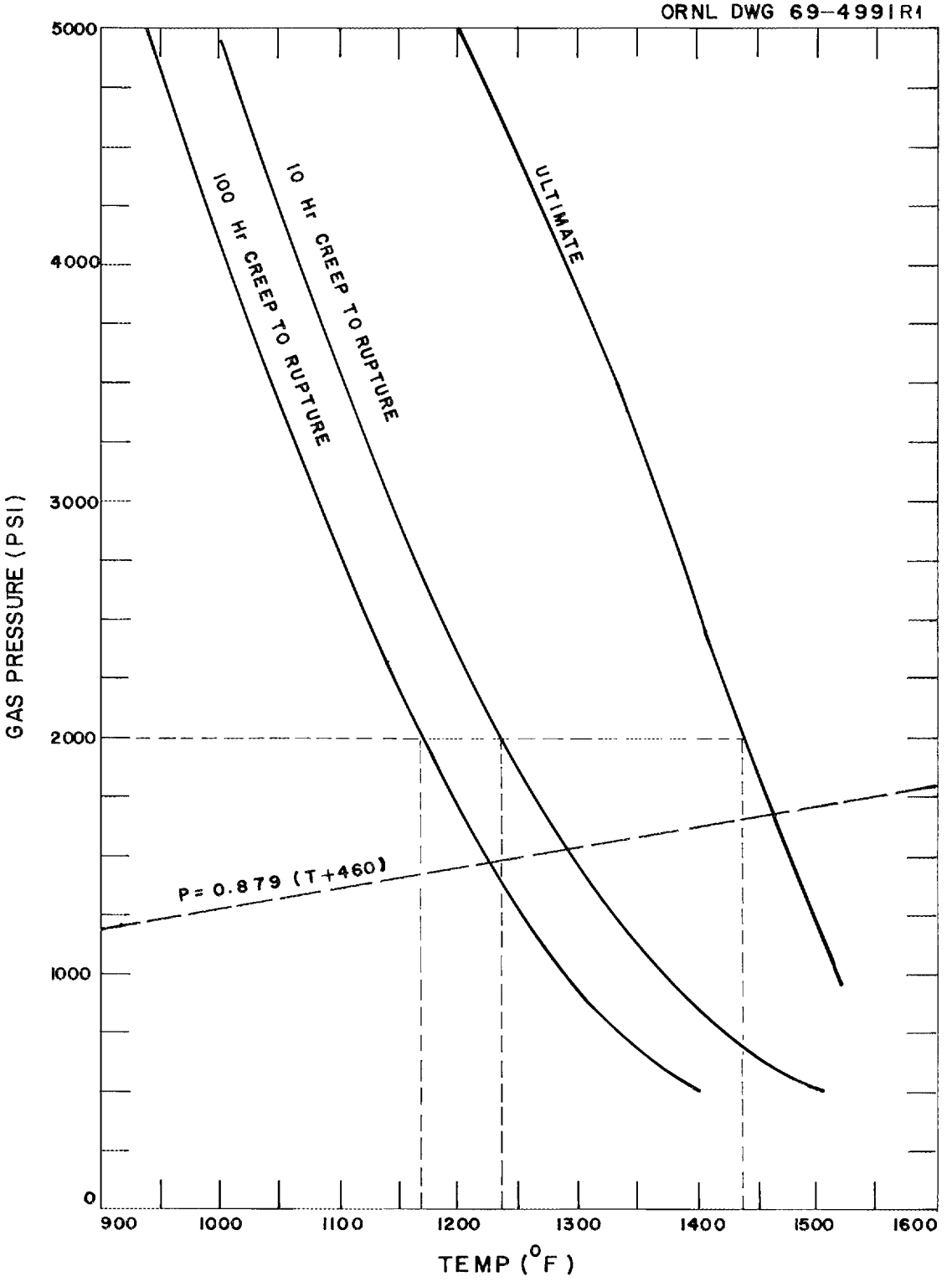

Fig. 5.15. Creep-Rupture Data Developed for Rods Whose D/t = 16; Data Developed from Fig. 5.14.

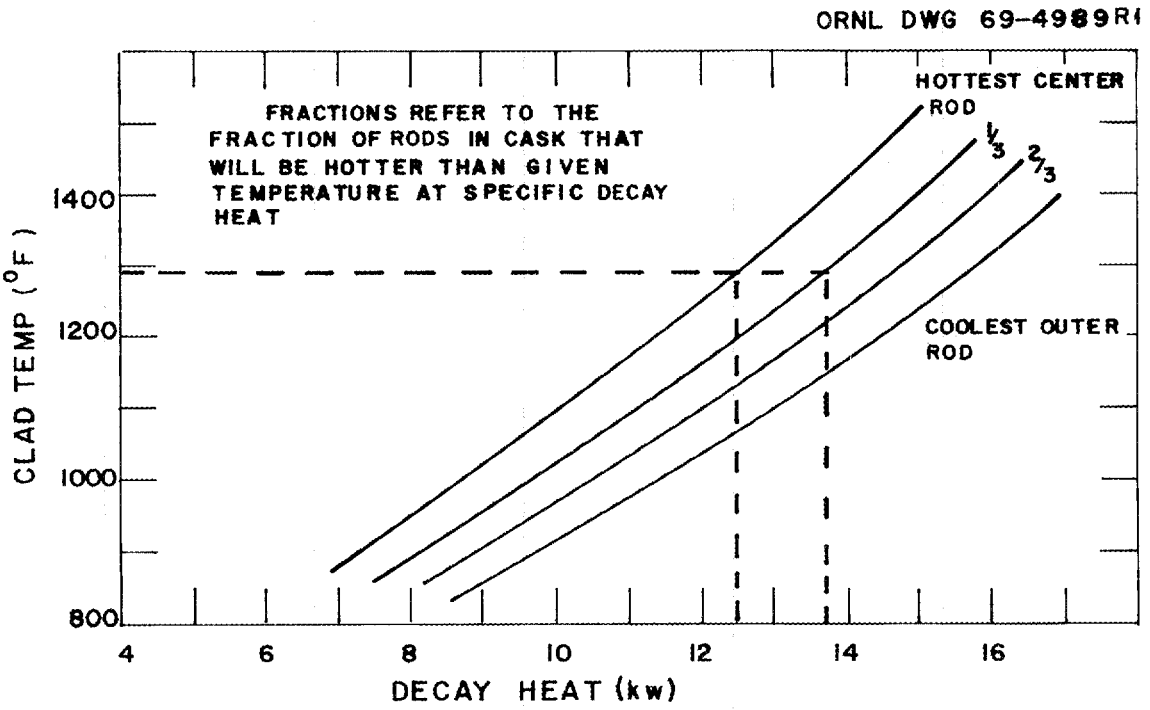

Fig. 5.16. Cladding Temperature as a Function of Decay Heat in Cask.

Assuming that the UO_2 fuel elements are clad with 347 stainless steel and the cladding has a D/t ratio of 16, Fig. 5.15 can be constructed from Fig. 5.14 (note how temperature points are constructed for a gas pressure of 2000 psi).

Assume that the UO_2 fuel, originally filled with 32-psig helium at 70°F, has a plenum volume of 520 in.^{3}/metric ton and is burned to 30,000-Mwd/metric ton. If the base temperature is 70°F and the fuel has operated at a maximum linear heat generation rate of 12 Kw per foot, then from Eq. (5.17):

$$P' = \frac{(1.45)(30)(40.84)}{(520)} = 1808 \text{ psi.}$$

From Fig. 5.13 a conservative value for f = 0.24 and, from Eq. (5.16),

$$\frac{P}{T} = \frac{[(1808)(0.24) + 32]}{530} = 0.879 \ .$$

The curve of $P = 0.879T$ (where T is in °R) is also drawn in Fig. 5.15. If it is possible that corrective action, such as artificial cooling, could take place within 10 hr after the elements reach equilibrium temperature following an accident, then the hottest rods could reach 1290°F without any ruptures. The time to reach this equilibrium temperature following the loss-of-coolant accident can vary from several hours to days, depending upon the heat load, heat capacity of the cask, geometry of the fuel, etc.

Figure 5.16 shows the cladding temperature as a function of the decay heat of the fuel element; it can be developed in a manner discussed in Sect. 5.4. Many of the fuel rods in a cask will be at about the same temperature due to the symmetry of the elements in a cask. This figure indicates the fraction of fuel rods in the cask that are above a given temperature.

Figure 5.17 is a typical plot of the decay heat in a fuel shipping cask as a function of cooling time. A family of curves could be constructed for different fuel element burnups or different fuel elements if subsequent fuel cycles significantly change this curve.

The maximum temperature of 1290°F (determined previously) when imposed on the curve of cladding temperature vs decay heat of the fuel element (Fig. 5.16), makes it possible to determine the maximum allowable fuel element decay heat for any number of fuel rod ruptures. An analysis must be made at this point to determine the amount of activity that would be released from a given number of ruptured fuel rods. The objective, of course, is to ascertain the number of fuel rods that can rupture and still insure adherence to the release limits in the regulations in the event that the cask should leak. The requirement of no failures due to high temperatures indicates a maximum decay heat load of 12.5 kw (Fig. 5.16). This can be expressed in terms of a minimum cooling time (132 days) by using Fig. 5.17. If the activity release analysis permitted one-third of the fuel rods to rupture, the decay heat could be allowed to increase to 13.7 kw (according to Fig. 5.16), which is equivalent to 105 days cooling time (Fig. 5.17).

The numbers presented in Figs. 5.16 and 5.17 are arbitrary and for illustrative purposes only.

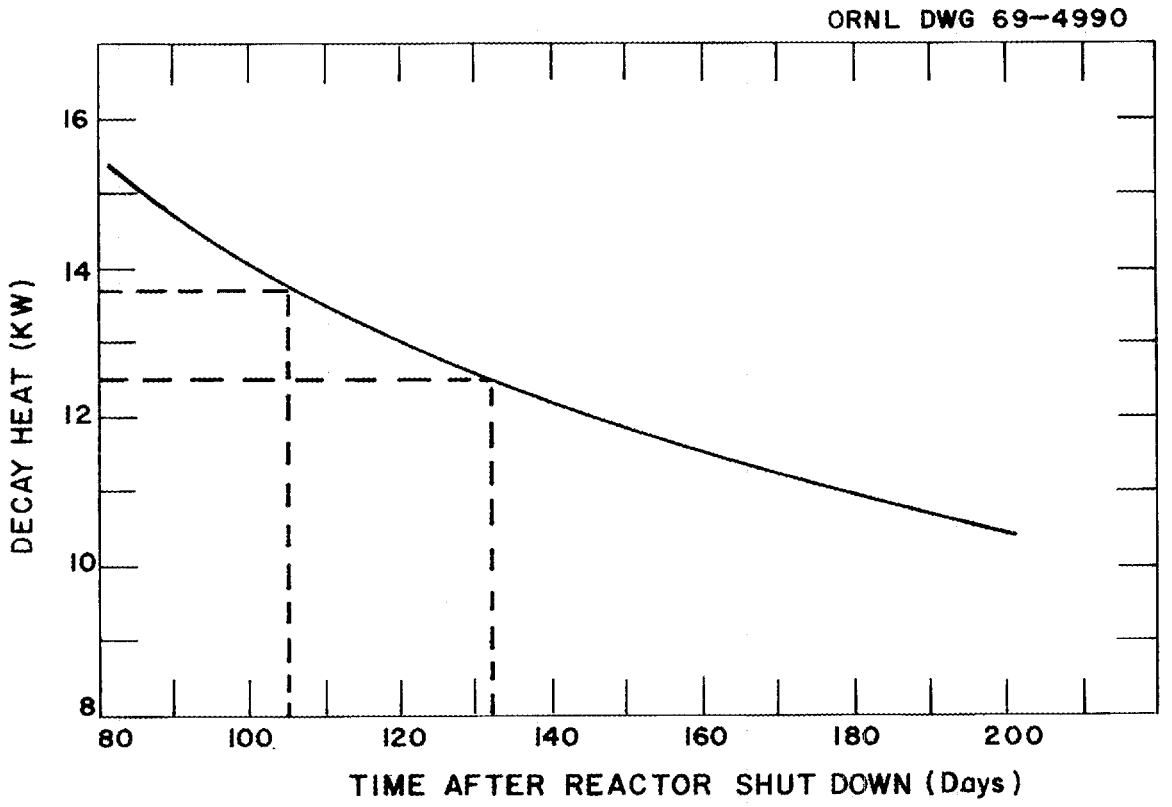

Fig. 5.17. Fuel Decay Heat as a Function of Time After Reactor Shutdown.

5.5 Fire Analysis

In the analysis of transient heat transfer, many methods are available for obtaining approximate temperature distributions through the use of mathematical models. These range from one-dimensional models that cannot account for a change of phase (which may be handled using finite difference solutions) to three-dimensional models that can account for melting (for which sophisticated computer codes have been written). The following paragraphs present a brief survey of methods that have yielded acceptable results in analyzing the response of a cask to a 0.5-hr fire. The fire will affect: (1) the strength of materials of construction, (2) the ability of the cask to shield the contents during and after the fire, (3) the cask seal, and (4) the mobility of the radioactive material in the cask. An analysis of the cask involved in the specified fire must aim at determining whether the cask can maintain its shielding and sealing characteristics. Certainly, criticality must also be considered since the fuel or poison plates could change position or form; however, in general, high temperatures will not create a criticality problem.

In attempting to assess the damage that a fire is capable of inflicting on a cask, many techniques have been employed. The objective of most of these methods is to determine: (1) the temperature profile through the cask shield as a function of time, (2) the maximum fuel element temperature, and (3) what portion of the shield, if any melts. This information may then be used, in principle, to estimate (1) both thermal and mechanical stresses that are induced in the outer and inner shells, (2) the ability of the cask seal to be maintained, and (3) the amount of fission products that may escape from the fuel to the primary coolant.

The techniques of analysis will be somewhat affected by the peculiarities of the cask to be analyzed. Several instances in which unirradiated material was to be transported in an insulated container and a one-dimensional analysis was considered adequate, graphical methods were employed to calculate the temperature profile through the cask as a function of time. These methods are often relatively simple, rapid, and accurate. A complete description of the theory and method may be found in refs. 14 and 18.

5.5.1 Graphical Method

The graphical technique discussed here, known as the Schmidt method, is relatively simple even when the boundary conditions become complicated, but is limited to temperatures below the melting point of the cask materials.

The one-dimensional, unsteady-state equation,[36] which applies to heat conduction in a thick-walled cylinder, is:

$$\frac{\partial T}{\partial \theta} = \left(\frac{\partial^2 T}{\partial r^2} + \frac{1}{r}\frac{\partial T}{\partial r}\right) a \ , \tag{5.18}$$

where T is temperature, θ is time, a is the thermal diffusivity, and r is the radius. This equation may be transformed into the finite difference Eq. (5.19):

$$T_n^{\,t+1} - T_n^{\,t} = \frac{2a\Delta\theta}{(r\Delta\eta)^2}\left(\frac{T_{n+1}^{\,t} + T_{n-1}^{\,t}}{2} - T_n^{\,t}\right) . \tag{5.19}$$

To use Eq. (5.19), the walls of the cylinder must be subdivided into concentric cylinders of constant thickness (Δr), and the temperature at the points between these intervals is determined as a function of time.

In Eq. (5.19) the superscripts indicate the number of time increments ($\Delta\theta$'s) that have elapsed; the subscripts indicate the position through the cylinder wall; and $\Delta\eta = \Delta r/r$.

Assuming that the thermal diffusivity of the system remains constant over the temperature range of interest, and choosing $\Delta\theta$ or $r\Delta\eta$ such that

$$\frac{2a\Delta\theta}{(r\Delta\eta)^2} = 1 \ , \tag{5.20}$$

then Eq. (5.19) becomes

$$T_n^{\,t+1} = \frac{T_{n+1}^{\,t} + T_{n-1}^{\,t}}{2} \ , \tag{5.21}$$

which indicates that the temperature at position n and at time increment t + 1 is equal to the arithmetic mean of the temperatures at position n + 1 and n - 1 measured at time increment t. This, therefore, permits a stepwise calculation of temperature as a function of time and temperature history.

Example. – A container, which is designed to transport unirradiated fissile material (see Fig. 5.18), was built by inserting Foamglas* insulation into a 30-gal drum. It was fire tested by placing it into an oven that had been preheated to 1725°F and measuring both inside and outside surface temperatures as a function of time.[22] The container was removed from the furnace at the end of 1 hr.

The temperature of the inner surface was calculated by the Schmidt method, using the measured outer surface temperature as input data and assuming that there were no end effects.

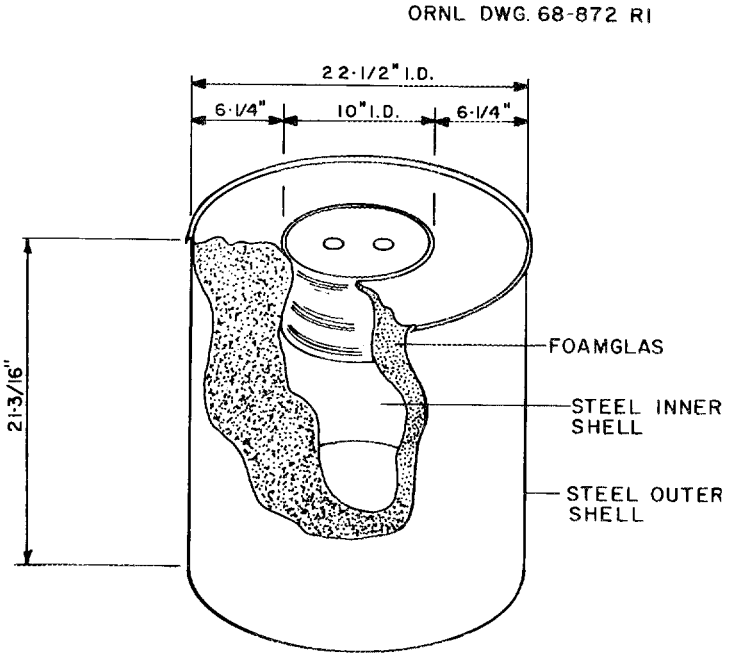

Fig. 5.18. Y-12 Foamglas Insulated Shipping Container.

The insulation was divided into six 1-in.-thick cylinders; $\Delta\eta$, calculated for each cylinder (see Table 5.4), was used to graphically determine the temperature as a function of time (see Fig. 5.19).

*Trademark of Pittsburgh Corning Co.

Table 5.4. Determination of $\Delta\eta$

Segment No.	Radius, r (in.) Inner	Outer	Mean	$\Delta\eta = \frac{\Delta r}{r}$
1	5	6	5.5	0.182
2	6	7	6.5	0.154
3	7	8	7.5	0.134
4	8	9	8.5	0.118
5	9	10	9.5	0.105
6	10	11	10.5	0.095

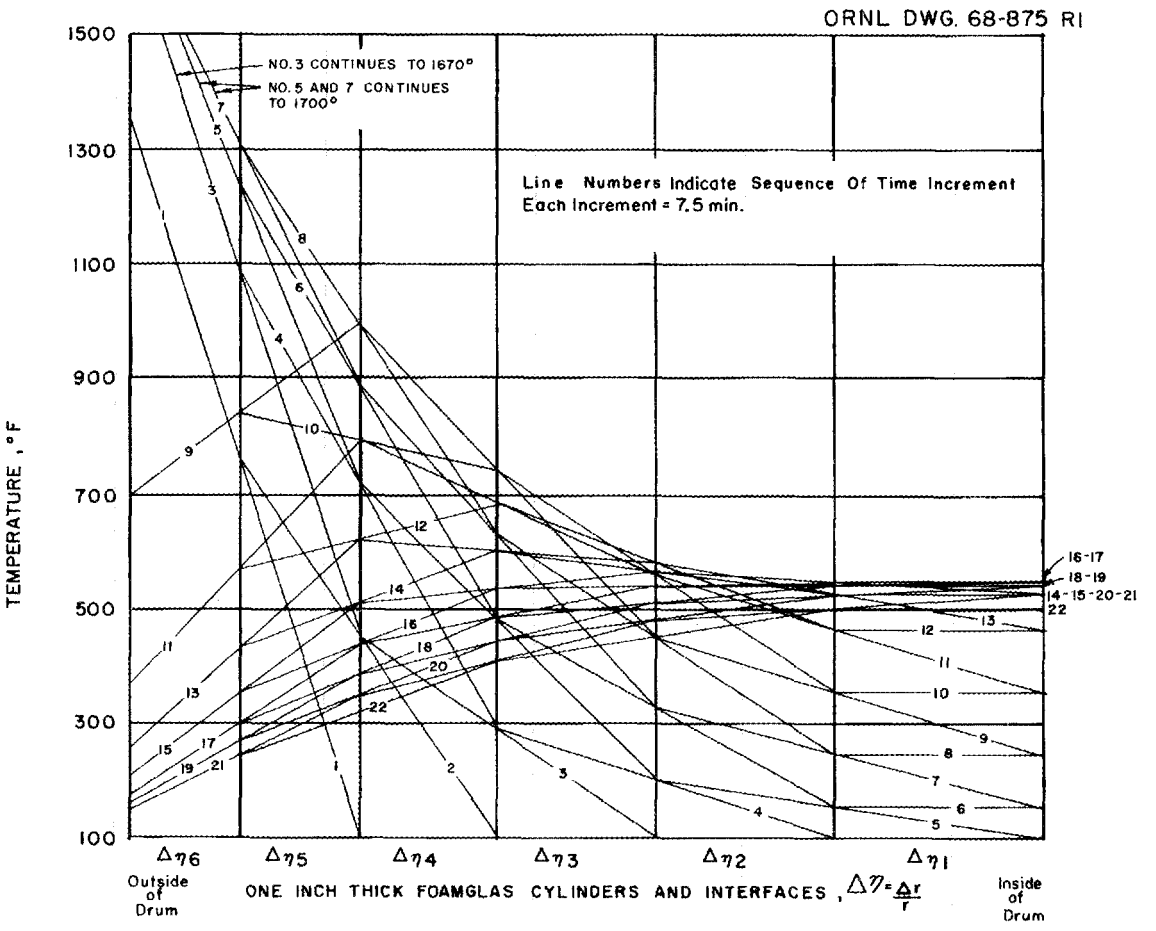

Fig. 5.19. Temperature Distribution Through the Annular Foamglas Insulation.

The thermal diffusivity, a, of Foamglas at room temperature is given as 0.0175 ft^2/hr. The average temperature of the insulation during the fire is in the range of 400°F, and the thermal conductivity is known to increase appreciably with temperature. For these reasons, a was assumed be be 0.0278 ft^2/hr. This number seems reasonable and, when used in Eq. (5.20), gives a convenient value for $\Delta\theta$:

$$\Delta\theta = (r\Delta\eta)^2/2a = [1/12]^2/[(2)(0.0278)]$$

$$= 0.125 \text{ hr} = 7.5 \text{ min.}$$

Equation (5.21) is solved graphically in Fig. 5.19.

The calculated value of the inner surface temperature as a function of time is compared with the measured inner and outer surface temperatures in Fig. 5.20. Agreement between the calculated and the measured results is reasonably good although the maximum calculated temperature is about 60°F below the measured maximum. End effects, which were not taken into account, undoubtedly contributed to this error. Greater accuracy could have been obtained by decreasing the thickness of the slabs (Δr), thereby shortening $\Delta\theta$ and/or treating the package as a sphere.

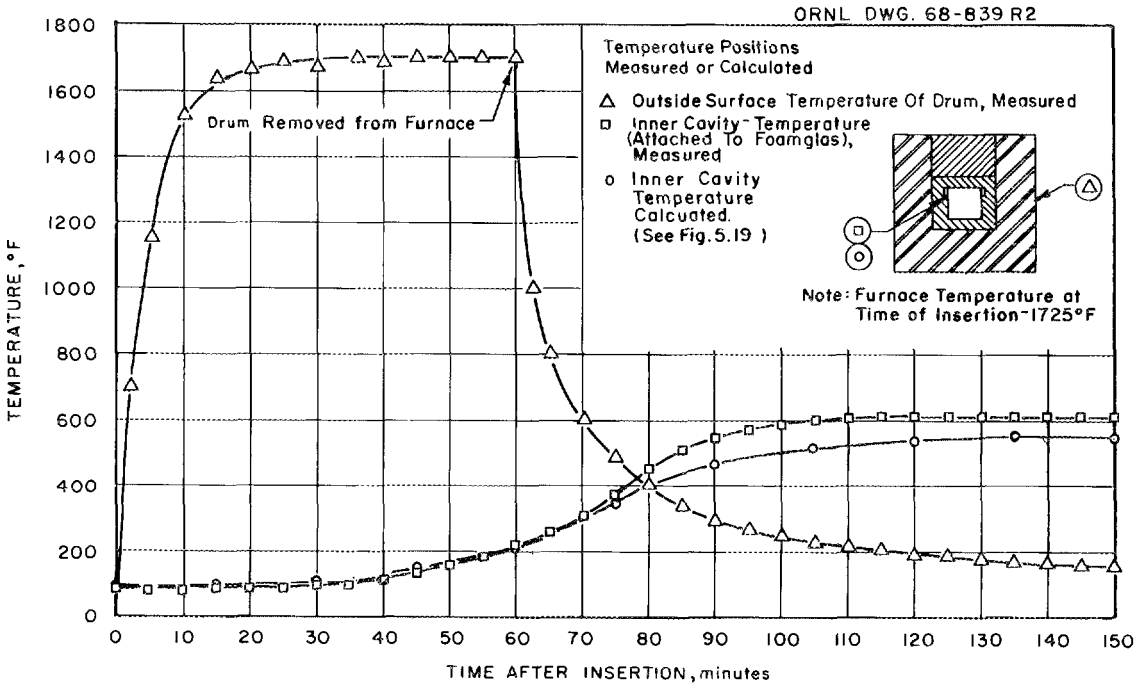

Fig. 5.20. Time-Temperature Curves for the Foamglas Container.

5.5.2 Analog Method

An electrical analog network for a thermal analysis of a lead-shielded cask under fire conditions has been reported by Bonilla and Strupczewski.[23] Their analysis can account for fins, an external fire shield, a fire shield situated inside the lead, and both convective and radiative heat transfer at the outer surface. Their network does not allow for internal (decay) heat generation although it would not be difficult to add to the program.

Bonilla and Strupczewski obtained some interesting albeit not surprising, results in their analysis of a lead-shielded MTR shipping cask. An external asbestos fire shield greatly reduced the cask temperatures resulting from the fire environment to the point that, in the absence of a high wind velocity, very little lead melted after a 1-hr exposure; for comparison, melting of the lead was complete after 14 min without the shield.

The use of steel thermal shields placed in the shielding cavity was also considered. In a fire, the lead between these steel shells would melt and flow away through drainage holes provided in the lower part of the cask. The resulting voids would constitute a thermal shield for the remaining portion of the lead. Results indicated that, with four such gaps, complete melting of the remaining lead required about 45 min.

5.5.3 Energy Balance Method

An empirical method for calculating the inner and outer shell temperatures and the amount of lead that melts in the specified 30-min fire has been proposed by Wachtell and Langhaar.[24] This method, based on a heat balance deduced from both theory and experiment, is essentially a one-dimensional analysis; however, it does account for melting in cask corners.

This method has several advantages. First, it is relatively simple and rapid and does not require a computer. Second, it takes into account the convection of molten lead; that is, vertical temperature gradients, found in actual fire tests of lead-shielded casks, are calculated. Third, the superheat of molten lead before all the lead has melted is recognized

and considered. Experimental results have shown that, during lead melting, the molten portion is considerably hotter than 621°F, the melting temperature of lead.

Disadvantages of the method are that the temperature gradients across the shield cannot be calculated as a function of time (although ways of doing this are suggested in ref. 24), and that fins are ignored with regard to heat transfer from the fire to the cask. The latter disadvantage will probably not pose a severe limitation if the cask being analyzed is at least of moderate size; tests tend to confirm this supposition. If the cask is small, however, and the fin height comprises an appreciable fraction of the cask radius (e.g., > 25%), neglect of the fins could be significant. In addition, the method does not account for air gaps, fire shields, or other features that would significantly affect the flow of heat. Nevertheless, in a number of cases, the method can be useful. The physical constants that may be assumed for these calculations are tabulated below.

	Stainless Steel	Carbon Steel	Solid Lead	Liquid Lead
k = thermal conductivity, Btu/hr-ft-°F	11	25	18.6	9.3
C_p = specific heat capacity, Btu/lb-°F	0.125	0.125	0.0325	0.038
ρ = density, lb/ft^3	485	487	687	657
H_f = latent heat of fusion, Btu/lb			10.55	
T_{MP} = melting temperature, °F			621	

In these calculations, time is divided into three intervals: t_0 to t_1, t_1 to t_2, and t_2 to t_3; t_0 is the initial time at the start of the fire test, t_1 is the time required to start melting of the lead in the center of a face away from the corners of the cask, t_2 is the time required to complete the melting of the lead, and t_3 is the time required to attain a temperature higher than the melting point of lead. The following steps are required in order to estimate the temperatures of the outer and inner cask shells:

Symbol	Description	Units
W_F	weight of fins	total lb
W'_F	weight of fins	lb/ft^2 of outer shell
W_{os}	weight of outer shell	total lb
W'_{os}	weight of outer shell	lb/ft^2 of outer shell
W_{is}	weight of inner shell	total lb
W'_{is}	weight of inner shell	lb/ft^2 of outer shell
W_L	weight of lead	total lb
W'_L	weight of lead	lb/ft^2 of outer shell

Step 2

The average temperature of the cask under normal operating conditions, T_o, must be estimated (see Sect. 5.3). From T_o and the curve shown in Fig. 5.21, the average surface temperature of the cask, T_{s-1}, between time t_o and t_1 may be obtained. The curve in Fig. 5.21 was drawn using Eq. (5.22):

$$T_{s-1}^4 = T_o^4 + 2T_o^3 (T_{MP} - T_o) - 2T_o^2 (T_{MP} - T_o)^2 + T_o (T_{MP} - T_o)^3 + \frac{1}{5} (T_{MP} - T_o)^4 , \qquad (5.22)$$

where T_{MP} is the melting-point temperature of the lead. All temperatures are in degrees Rankine.

Step 3

With a fire temperature of 1475°F (1935°R), a flame emissivity of 0.9, and a cask absorption coefficient of 0.8, as required by the regulations, the average heat flux between the time t_o and t_1 is given by:

$$\bar{Q}_1 = (1935^4 \times 0.9 - T_{s-1}^4)(0.173 \times 10^{-8})(0.8) \text{ Btu/hr-ft}^2 . \qquad (5.23)$$

The value for $\bar{Q}_1$ may be found from the curve shown in Fig. 5.22 if T_{s-1} is known.

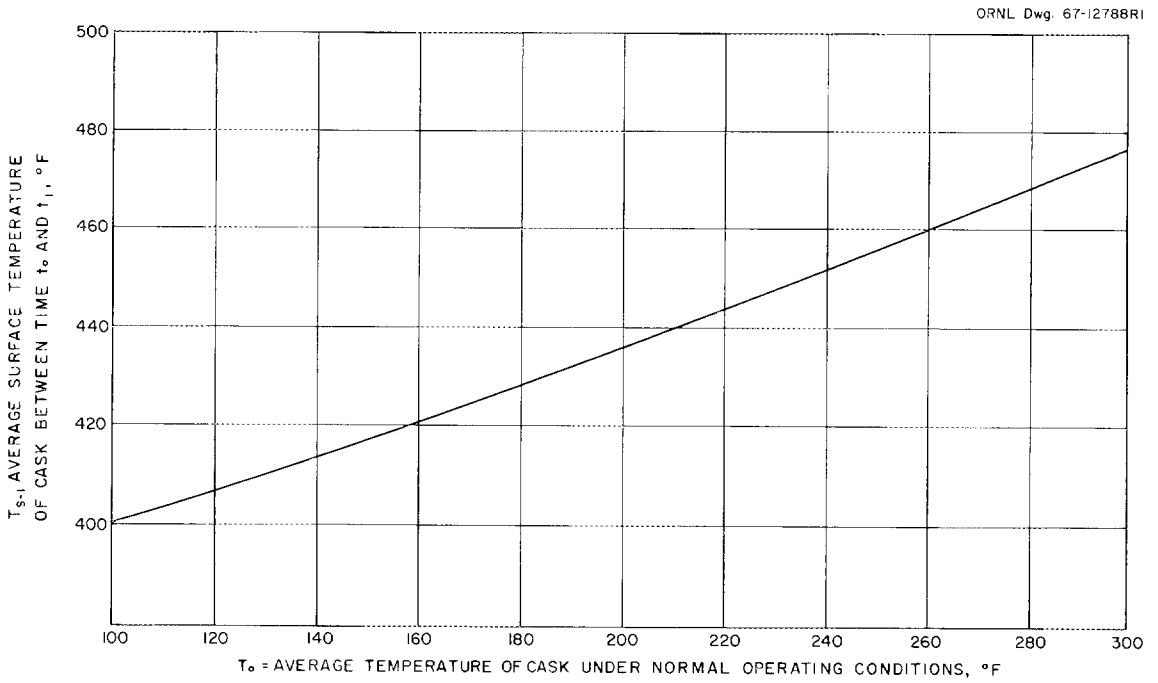

Fig. 5.21. Average Surface Temperature of the Cask Between Time t_0 and t_1, as a Function of the Average Temperature of the Cask Under Normal Operating Conditions.

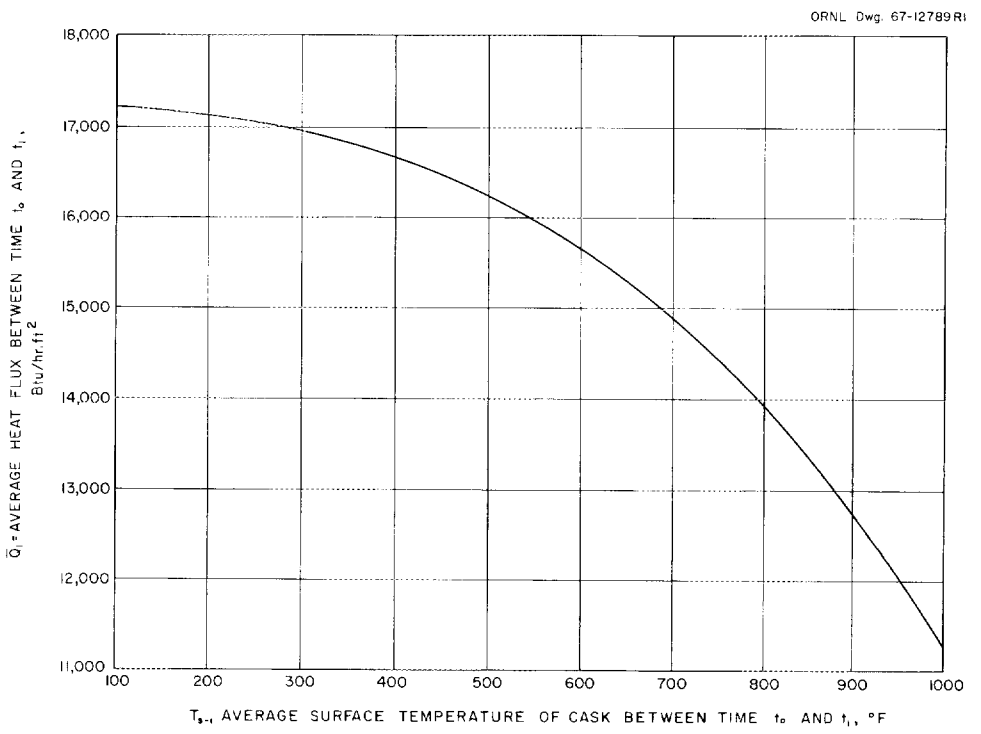

Fig. 5.22. Average Heat Flux Between Time t_0 and t_1 as a Function of the Temperature of the Surface of the Cask.

Step 4

The average temperature of solid lead in the cask at time t_1 is given by:

$$T_{L-1} = 621 - \frac{\overline{Q}_1 D}{36k} , \qquad (5.24)$$

Where D = the thickness of the lead shield in inches. The value of T_{L-1} can be determined from the nomograph shown in Fig. 5.23.

Step 5

The average temperature of the inner shell of the cask at time t_1 may be calculated from:

$$T_{is-1} = 621 - \frac{\overline{Q}_1 D}{24k} \qquad (5.25)$$

The value of T_{is-1} can be determined from the nomograph shown in Fig. 5.24.

Step 6

To determine a value for t_1, the quantity of heat absorbed per square foot of cask surface at time t_1 must be calculated. The temperature of the outer shell and the fins must first be calculated by using Eqs. [5.26(a)] and [5.26(b)]. For the outer shell,

$$T_{os-1} = 621 + \frac{\overline{Q}_1 \chi}{24k} , \qquad (5.26a)$$

where χ = the thickness of the outer shell in inches.

For the fins,

$$T_{F-1} = 621 + \frac{\overline{Q}_1 \chi}{12k} \qquad (5.26b)$$

These temperatures may easily be found for carbon and stainless steel materials of construction by referring to Figs. 5.25 through 5.28. For the nomographs, it was assumed that k for carbon steel = 25 Btu/hr-ft-°F, and that k for stainless steel = 11 Btu/hr-ft-°F.

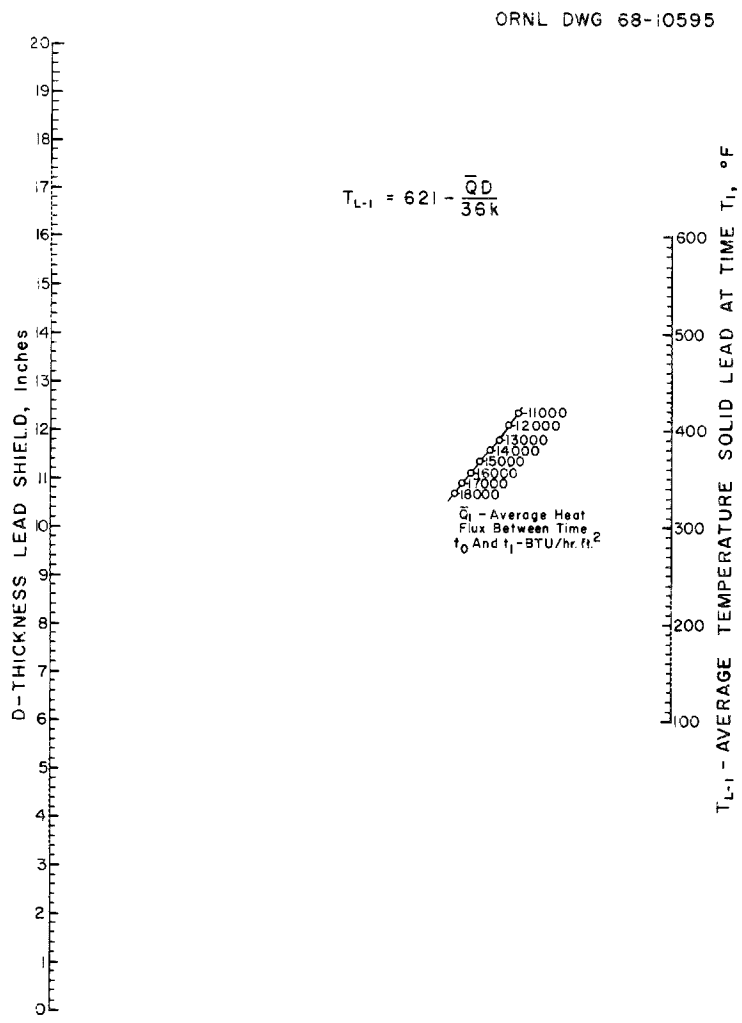

Fig. 5.23. Nomograph to Determine the Average Temperature of the Solid Lead in a Cask as a Function of the Lead Thickness and the Heat Flux.

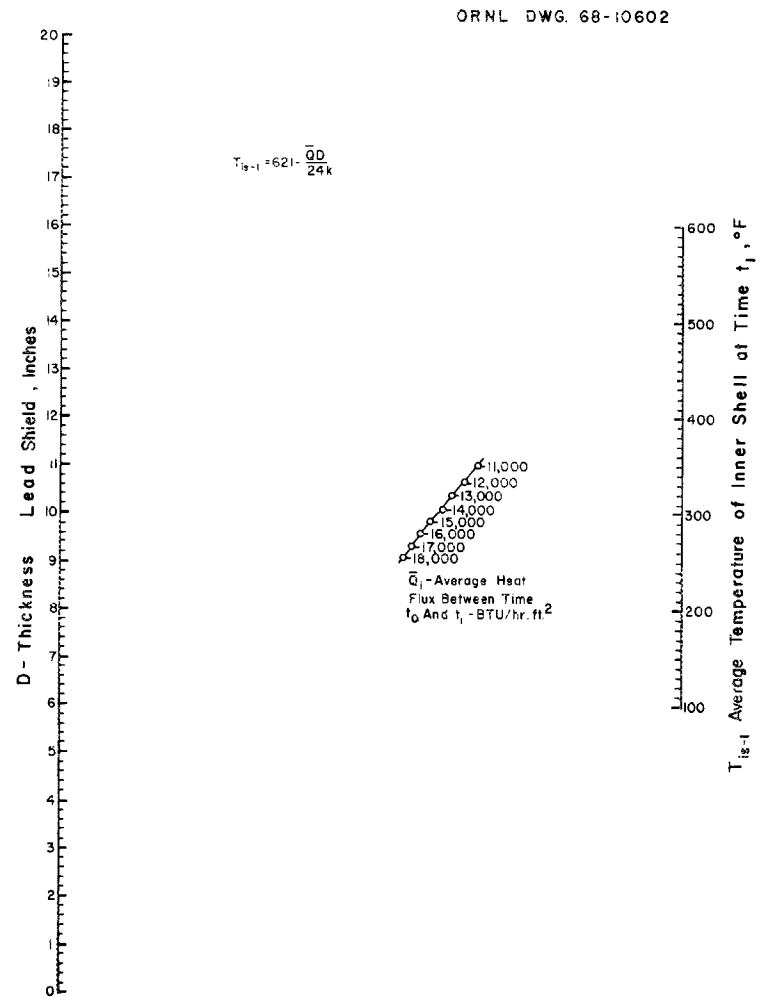

Fig. 5.24. Nomograph to Determine the Average Temperature of the Inner Shell in a Cask as a Function of the Thickness of the Lead and the Heat Flux.

ORNL DWG 68-10611

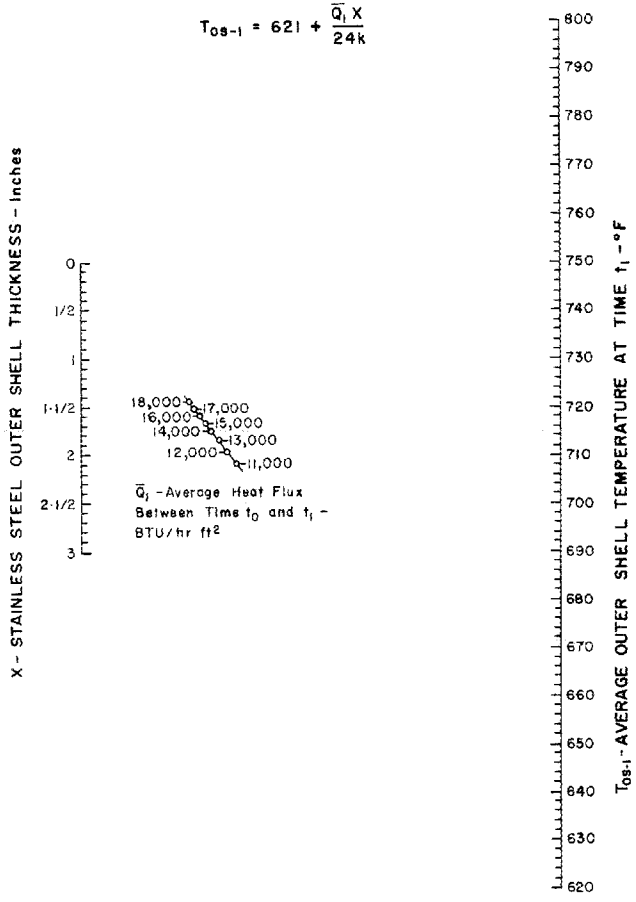

Fig. 5.25. Nomograph to Determine the Average Outer Stainless Steel Shell Temperature at Time t_1 as a Function of the Outer Shell Thickness and the Heat Flux.

ORNL DWG 68-10614

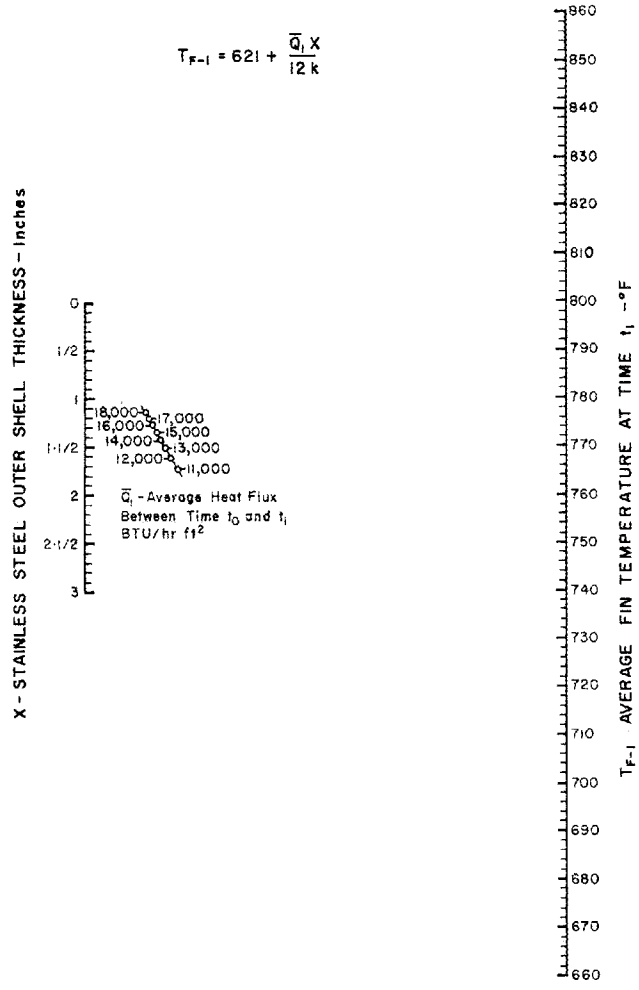

Fig. 5.26. Nomograph to Determine the Average Stainless Steel Fin Temperature at Time T_1 as a Function of the Outer Shell Thickness and the Heat Flux.

ORNL DWG 68-10608

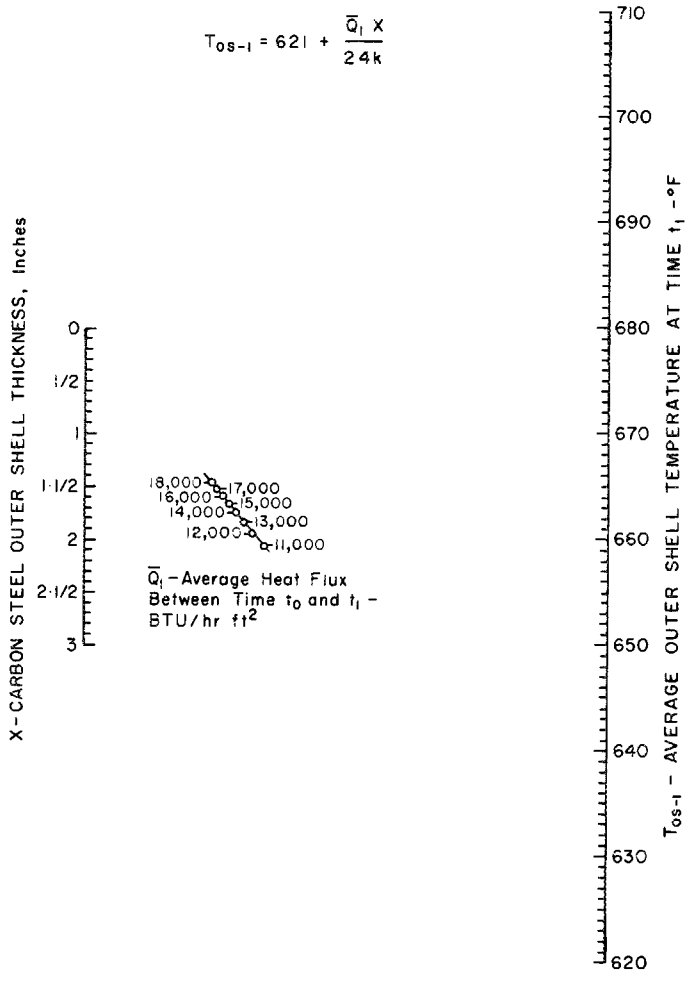

Fig. 5.27. Nomograph to Determine the Average Outer Carbon Steel Shell Temperature at Time t_1 as a Function of the Outer Shell Thickness and the Heat Flux.

ORNL DWG 68-10622

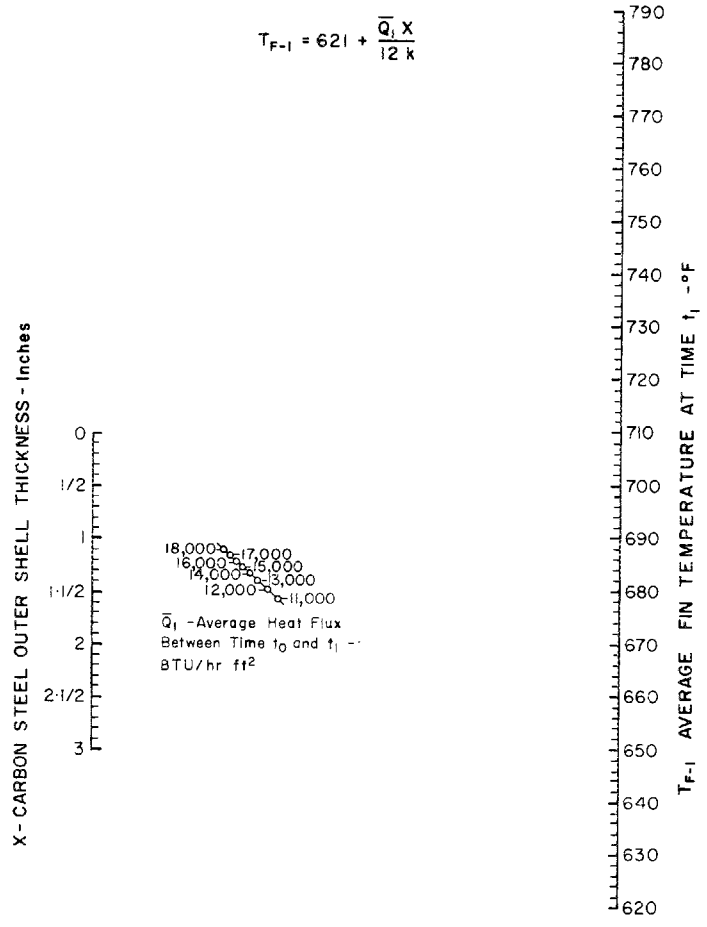

Fig. 5.28. Nomograph to Determine the Average Carbon Steel Fin Temperature at Time t_1 as a Function of the Outer Shell Thickness and the Heat Flux.

Assuming that W'_F, W'_{os}, W'_{is}, and W'_L are the weights of the fins, outer shell, inner shell, and lead per square foot of outer shell area, respectively, the total heat absorbed per square foot at time t_1, H'_{T-1}, is the sum of that absorbed by the parts of the cask. That is,

$$H'_{F-1} = W'_F(T_{F-1} - T_0)0.125$$

$$H'_{os-1} = W'_{os}(T_{os-1} - T_0)0.125$$

$$H'_{is-1} = W'_{is}(T_{is-1} - T_0)0.125$$

$$H'_{L-1} = W'_L(T_{L-1} - T_0)0.0325$$

$$H'_{T-1} = MC_p\Delta T \text{ Btu/ft}^2$$

Then t_1 is given by:

$$t_1 = \frac{H'_{T-1}}{\overline{Q}_1} . \tag{5.27}$$

Step 7

The total heat absorbed by the cask at time t_1 may be calculated from the equation

$$H^*_{T-1} = H'_{T-1}A . \tag{5.28}$$

Step 8

The amount of lead that is molten at time t_1 may be estimated by calculating the heat that would be absorbed by the cask if all the lead were solid and each component of the cask was at the same average temperature as it was in step 6.

If W_F, W_{os}, W_{is}, and W_L are the total weights of the fins, outer shell, inner shell, and lead, respectively, and if all the lead were solid, the total heat absorbed by the cask at time t_1, H_{T-1}, would be the sum of that absorbed by the parts. That is,

$$H_{F-1} = W_F(T_{F-1} - T_o)0.125$$

$$H_{os-1} = W_{os}(T_{os-1} - T_o)0.125$$

$$H_{is-1} = W_{is}(T_{is-1} - T_o)0.125$$

$$H_{L-1} = W_L(T_{L-1} - T_o)0.0325$$

$$\overline{\qquad\qquad\qquad\qquad\qquad\qquad}$$

$$H_{T-1} \text{ Btu.}$$

Thus

$$\Delta H_{T-1} = H^*_{T-1} - H_{T-1} \ .$$

The weight of the molten lead can now be calculated from Eq. (5.29):

$$W_{ML-1} = \frac{\Delta H_{T-1}}{(621 - T_{L-1})(0.0325) + 10.55} \tag{5.29}$$

Note that if the cask were an infinitely long cylinder or a semi-infinite slab there would be no molten lead at time t_1 because the onset of melting would be uniform over the surface. Finite cask geometries that have edges and corners create spots for lead to start melting quickly.

Step 9

The superheat of the molten lead has been estimated to be 4.3°F per vertical inch for a 1475°F fire. The average amount of superheat of the superheated lead, T_{sup} is, therefore, given by

$$T_{sup} = (4.3°F)\frac{h}{2} \ , \tag{5.30}$$

where h = the vertical dimension of the cask in the fire.

Step 10

The surface temperature of the cask at time t_2 is given by:

$$T_{s-2} = T_{F-1} + T_{sup} \ . \tag{5.31}$$

The average temperature of the outer shell of the cask at time t_2 is:

$$T_{os-2} = T_{os-1} + T_{sup} \ . \tag{5.32}$$

Values of T_{F-1} and T_{os-1} were computed in step 6.

Step 11

The net heat flux absorbed from time t_1 to t_2 may be calculated from

$$\bar{Q}_2 = \left[1935^4(0.9) - T_{s-2}^4\right](0.173 \times 10^{-8})(0.8) \ . \tag{5.33}$$

Values for $\bar{Q}_2$ may be obtained from the curve shown in Fig. 5.29.

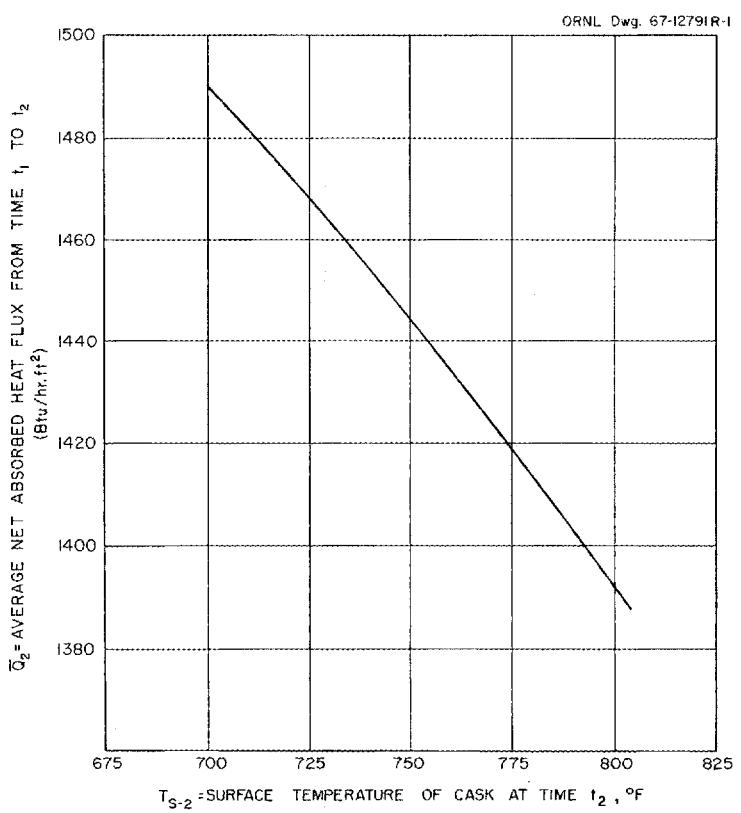

Fig. 5.29. Net Heat Flux Absorbed from Time t_1 to t_2 as a Function of the Surface Temperature of the Cask.

Step 12

The total amount of heat absorbed by the cask at time t_2, H^*_{T-2} (i.e., when the lead is completely melted), may be calculated from the following equations:

$$H_{F-2} = W_F(T_{F-2} - T_o)0.125$$

$$H_{os-2} = W_{os}(T_{s-2} - T_o)0.125$$

$$H_{is-2} = W_{is}(621 + T_{sup} - T_o)0.125$$

$$H_{LM} = W_L(621 - T_o)0.0325$$

$$H_{LS} = W_L(T_{sup})0.038$$

H^*_{T-2} Btu.

Step 13

A value for T_2 may now be computed.

$$(t_2 - t_1) = \frac{H^*_{T-2} - H_{T-1}}{\overline{Q}_2 A} \tag{5.34}$$

$$t_2 = t_1 + (t_2 - t_1) \ . \tag{5.35}$$

Step 14

If time t_2 is greater than 0.5 hr, then all of the lead will not be melted at the end of the 30-min fire test. In this event, the quantity of the lead that is melted may be computed by using Eq. (5.36).

$$W_{ML-2} = W_{ML-1} + (W_L - W_{ML-1}) \frac{(0.500 - t_1)^{1.5}}{(t_2 - t_1)^{1.5}} \tag{5.36}$$

Step 15

The temperature of the inner shell may be calculated by assuming that the body of the cask is at a uniform temperature. The total heat absorbed per °F by the steel and lead in the cask up to the melting point of lead is given by:

$$H_S^* = 0.125\ (W_{os} + W_{is} + W_F)\ . \tag{5.37}$$

$$H_L^* = 0.0325 W_L\ . \tag{5.38}$$

$$H_T^* = H_S^* + H_L^*\ \text{Btu/°F}\ . \tag{5.39}$$

The heat absorbed at the end of a 0.5-hr period $= H_{T-1}^* + (0.5 - t_1)\overline{Q}_2 A$. (5.40)

The maximum temperature of the inner shell after the cask has attained a uniform temperature may then be calculated from:

$$T_{is_{m-2}} = T_0 + \frac{H_{0.5}^*}{H_T^*} \tag{5.41}$$

or T_{MP}, whichever is less, provided that $H_{0.5}^*$ is $\geq H^{**}$ (where $H^{**} = H_{T-2}^*$ computed without superheat).

Nomenclature for Energy Balance Method

A = effective external surface area of cask, ft^2

C_p = specific heat capacity, Btu/lb-°F

D = thickness of lead shield, in.

H_f = latent heat of fusion, Btu/lb

H_{F-1} = heat absorbed by cask fins at time t_1, Btu

H'_{F-1} = heat absorbed per square foot of fin at time t_1, Btu/ft^2

H_{F-2} = heat absorbed by cask fins at time t_2, Btu

H_{is-1} = heat absorbed by inner shell of cask at time t_1, Btu

H'_{is-1} = heat absorbed by inner shell of cask at time t_1, Btu/ft^2

H_{is-2} = heat absorbed by inner shell of cask at time t_2, Btu

H^*_L = heat absorbed by lead to its melting point, Btu/°F

H_{L-1} = heat absorbed by lead at time t_1, Btu

H'_{L-1} = heat absorbed by lead at time t_1, Btu/ft^2

H_{LL} = heat absorbed by melting lead, Btu

H_{LM} = heat absorbed by solid lead to melting, Btu

H_{LS} = heat absorbed by superheating lead, Btu

H_{os-1} = heat absorbed by outer shell of cask at time t_1, Btu

H'_{os-1} = heat absorbed by outer shell of cask at time t_1, Btu/ft^2

H_{os-2} = heat absorbed by outer shell of cask at time t_2, Btu

H^*_S = heat absorbed by steel on cask to the melting point of lead, Btu/°F

H^*_T = total heat capacity of the cask at temperature below melting point of lead, Btu/°F

H'_{T-1} = total heat absorbed by the cask at time t_1, Btu/ft^2

H^*_{T-1} = total heat absorbed by the cask at time t_1, Btu

H_{T-1} = total heat that would be absorbed by the cask if all the lead were solid, Btu

ΔH_{T-1} = heat available for melting lead at time t_1, Btu

H^*_{T-2} = total heat absorbed by the cask at time t_2, Btu

$H^*_{0.5}$ = heat absorbed at the end of 0.5 hr, Btu

h = vertical dimension of cask in fire test calculations, in.

k = thermal conductivity, Btu/hr-ft-°F

M = weight of cask per unit area of outer shell area, lb/ft^2

$\overline{Q}_1$ = average heat flux between time t_0 and t_1, Btu/hr-ft^2

$\overline{Q}_2$ = average heat flux between time t_1 and t_2, Btu/hr-ft^2

T_0 = average temperature of cask under normal operating conditions, °F

T_{F-1} = average fin temperature at time t_1, °F

T_{F-2} = average surface temperature of fins at t_2, °F

T_{is-1} = average temperature of inner shell of cask at time t_1, °F

$T_{is_{m-2}}$ = maximum temperature of inner shell of cask at time t_2, °F

T_{L-1} = average temperature of solid lead at time t_1, °F

T_{MP} = melting temperature of lead = 621°F = 1081°R

T_{os-1} = average temperature of outer shell of cask at time t_1, °F

T_{os-2} = average temperature of outer shell of cask at time t_2, °F

T_{s-1} = average surface temperature of cask between time t_0 and t_1, °F

T_{s-2} = surface temperature of cask at time t_2, °F

T_{sup} = average temperature of superheated lead, or the increase above 621°F at time t_2, °F

t_0 = initial time at start of fire test

t_1 = time required to start melting lead in center of cask face, hr

t_2 = time required to complete melting of lead, hr

t_3 = time required to arrive at a temperature higher than the melting point of lead, hr

W_F = weight of fins, lb

W'_F = weight of fins per unit of outer shell area, lb/ft^2

ΔT = differential in temperature, °F

W_{is} = weight of inner shell, lb

W'_{is} = weight of inner shell per unit of outer shell area, lb/ft^2

W_{ML-1} = weight of molten lead at time t_1, lb

W_{ML-2} = weight of melted lead at time t_2, lb

W_{os} = weight of outer shell, lb

W'_{os} = weight of outer shell per unit of outer shell area, lb/ft^2

χ = thickness of the outer shell, in.

ρ = density, lb/ft^3

5.5.4 Use of Digital Computers in Studying the Thermal Transient Caused by a Fire

In recent years, digital computer programs have been written to provide solutions to general and specific transient heat transfer problems. The development of such programs has been prompted by a variety of reasons such as to analyze heat transfer in three dimensions, to include temperature-dependent material properties, and to incorporate time-dependent boundary conditions. Such codes are valuable in studying the thermal response of a cask to the hypothetical fire condition.

The programs have ranged from those which provide numerical evaluation of closed-form analytical solutions of heat-transfer equations to those which involve direct mathematical models of the heat-transfer phenomena. Some of the characteristics of computer codes that are useful in analyzing the response of a cask to the hypothetical fire are discussed below.

Several codes have been developed to obtain a solution to the differential heat transfer equations written in finite difference form for specific geometries. (An excellent reference on the principles used in finite difference solutions to problems in heat transfer is the text by G. M. Dusenberre.[25]) Examples of these are the FACP[26] code and the code described in a paper by K. H. Veith.[27] Whereas both of these programs are aimed at specific cask geometries, each has limitations in its capability for providing detailed information regarding thermal behavior. However, each program provides a reasonably detailed analysis of cask behavior and is economical from the standpoint of computer memory and machine time.

A second major class of computer codes is comprised of those based on finite element representation. The SIFT-TOSS[28] and TRUMP[29] codes are examples of general application codes of this type; they are not intended for use on any specific geometry. Both codes provide for computer input in terms of physical coordinates that describe material boundaries; the codes allow the various material volumes to be divided into a large number of smaller regions, thus providing the flexibility to model a specific problem.

The heat-transfer equations in these codes are used to describe heat flow in a medium, including the ability of the medium to retain heat and to resist heat transfer in each individual small volume. For each small time increment, a heat balance is calculated for each elemental volume; this results in a temperature change for that volume from its previous temperature. Solutions to the problem of transient heat transfer are carried out in a manner closely resembling that used in codes based on finite difference representation of the equations.[26,27]

Severe problems of storage and machine time may result from using a very finely divided network since such networks reduce the heat capacitance of the individual volume elements. The method of solution used in the SIFT-TOSS and TRUMP codes requires that the time increment used in each heat balance be dictated by the smallest heat capacitance used in the network. Even with present-day high-speed digital computers it is not uncommon for the execution time of some analyses to exceed the real time being modeled.

Some cask geometries may be difficult to model using codes such as SIFT-TOSS and TRUMP; for example, SIFT-TOSS does not have a mesh generator for spherical coordinates. The incorporation of mesh generators into codes like SIFT-TOSS and TRUMP requires relatively large banks, which, in turn, reduce the number of elements that may be utilized in a given problem. In order that a larger number of elemental volumes may be considered, the input generator (SIFT) of the SIFT-TOSS code may be bypassed and only the TOSS portion used.

In certain cases of analysis, advantages will be found in "building" a specialized program from a family of subroutines incorporated in problem-oriented codes such as CINDA-3G.[30] This code consists of a series of numerical routines for solution by direct or iterative methods. This allows an almost unlimited capability for modeling thermal transient problems in terms of number of elements considered, and also requires vast amounts of input to describe a given problem.

5.6 References

1. "Safety Standards for the Packaging of Radioactive and Fissile Materials," AEC Manual Chapter 0529 (August 1966, revision).

2. THT-D (Transient Heat Transfer Program). Originator: The General Electric Company.

3. NETHAN-II and III (Network Thermal Analyzer). Originator: Applied Physics Laboratory. Developer: Communications Satellite Corp.; modified by Battelle Memorial Laboratory.

4. CINDA (Chrysler Improved Numerical Differencing Analyzer). Originator: Space Division of the Chrysler Corporation.

5. J. S. Watson, Heat Transfer from Spent Reactor Fuels During Shipping: A Proposed Method for Predicting Temperature Distribution in Fuel Bundles and Comparison with Experimental Data, ORNL-3439 (May 27, 1963).

6. E. D. Arnold, PHOEBE - A Code for Calculating Beta and Gamma Activity and Spectra for ^{235}U Fission Products, ORNL-3921 (July 1966).

7. R. W. Peelle, W. Zobel, and T. A. Love, "Measurement of the Spectrum of Short-Lived Fission Product Decay Gamma Rays Emitted from a Rotating Fuel Belt," Applied Nuclear Physics Division Annual Report, ORNL-2081 (September 1956); W. A. Zobel and T. A. Love, "Time and Energy Spectra of Fission Product Gamma Rays Measured at Short Times After Uranium Sample Irradiations," ibid.

8. J. F. Perkins and R. W. King, "Energy Release from the Decay of Fission Products," Nucl. Sci. Eng. 3(6), (June 1958).

9. J. O. Blomeke and M. F. Todd, Uranium-235 Fission Product Production as a Function of Thermal Flux, Irradiation Time, and Decay Time, ORNL-2127 (Aug. 19, 1957).

10. C. A. Anderson, Jr., Fission Product Yields from Fast (ν/Mev) Neutron Fission of Pu-239, LA-3384 (Dec. 30, 1965).

11. Yu A. Zysin, A. A. Lbov, and L. I. Sel'chenkov, Fission-Product Yields and Their Mass Distribution (Consultants Bureau, New York, 1964); Russian publication in 1963.

12. S. Katcoff, "Fission-Product Yields from Neutron-Induced Fission," Nucleonics 18 (11), 201 (1960).

13. L. Burris, Jr., and I. G. Dillon, Estimation of Fission Product Spectra in Discharged Fuel from Fast Reactors, ANL-5742 (July 1957).

14. Frank Kreith, Principles of Heat Transfer, pp. 217-227, International Textbook Co., Scranton, Pa., 1958.

15. A. I. Brown and S. M. Marco, Introduction to Heat Transfer, 2d ed., p. 68, McGraw-Hill, New York, 1951.

16. F. I. Hand, "Insulation on Clear Days at the Time of Solstices and Equinoxes for Latitude 42°N," Heating and Ventilation 47, 92 (Jan. 1950); 51, 97 (Feb. 1954).

17. H. C. Hottel, Mark's Engineering Handbook, 6th ed., p. 12-114, 1958.

18. W. H. McAdams, Heat Transmission, 3d ed., pp. 172-78, McGraw-Hill New York, 1954.

19. C. S. Williams, J. Opt, Soc. Am. 51, 564 (May 1961).

20. M. Jacob, Heat Transfer, Vol. 1, p. 236, Wiley, New York, 1956.

21. S. C. Skirvin, User's Manual for the THTC Computer Program, General Electric Company, Cincinnati, Ohio.

22. J. D. McLendon, "Tests of a Proposed Uranium Container," p. 161 in Summary Report of AEC Symposium on Packaging and Regulatory Standards for Shipping Radioactive Material held in Germantown, Md. Dec. 3-5, 1962, TID-7651.

23. C. F. Bonilla and A. L. Strupczewski, Nucl. Struct. Eng. 2 (1), 40-47 (1965).

24. G. P. Wachtell and J. W. Langhaar, Fire Test and Thermal Behavior of a 15-ton Lead-Shielded Cask, DP-1070 (Oct. 1966).

25. G. M. Dusenberre, Heat Transfer Calculations by Finite Differences, International Textbook Company, Scranton, Pa., 1961.

26. W. C. Corder, Battelle Memorial Institute, FACP Code, personal communication.

27. K. H. Veith, "Assessment of the Thermal Behavior of Irradiated Fuel Casks," pp. 306-19 in 2nd International Symposium on Packaging and Transportation of Radioactive Materials, October 14-18, 1968, CONF-681001.

28. David Bagwell, SIFT: An IBM 7090 Code for Computing Heat Distributions, K-1528, Oak Ridge Gaseous Diffusion Plant; David Bagwell, TOSS, K-1494 (Dec. 1, 1961).

29. A. L. Edwards, TRUMP: A Computer Program for Transient and Steady State Temperature Distributions in Multi-Dimensional Systems, UCRL-14754, Rev. 1 (May 1, 1968).

30. D. R. Lewis, J. D. Gaski, and L. R. Thompson, CINDA-3G, TN-AP-67-287, Chrysler Corp. Space Division,(Oct. 20, 1967).

31. G. W. Parker, Oak Ridge National Laboratory, private communication; data based on G. B. Matheney, G. W. Parker, and D. H. Walker, "ORNL - LOFT Fission Product Support Program," (May 1969) in Safety Investigations, ed. by K. A. Deitz, IDO-17258

32. J. P. Hoffman and D. H. Coplin, The Release of Fission Gases from Uranium Dioxide Pellet Fuel, GEAP-4596 (Sept. 1964).

33. C. R. Woods (ed.), Properties of Zircaloy-4 Tubing, WAPD-TM-585 (Dec. 1966), p. 96.

34. T. Lyman, Metals Handbook, 8th ed., Vol. 1, American Society for Metals, Metals Park, Ohio, 1961.

35. J. E. Irvin and A. L. Bement, The Nature and Engineering Significance of Radiation Damage to Various Stainless Steel Alloys, BNWL-SA-376 (April 1966).

36. H. S. Carslaw and J. C. Jaeger, Conduction of Heat in Solids, 2nd ed, p. 188, Oxford, 1959.

37. C. W. Smith, General Electric Company, personal communication of Docket 70-1220 available from the Public Document room, Washington, D. C.

38. O. H. Klepper, Radiant Interchange Factors for Heat Transfer in Parallel Rod Arrays, ORNL-TM-583 (Dec. 26, 1963).

6. CRITICALITY

6.1 Introduction

The criticality evaluation problem considered here is more concerned with the proof of adherence to the requirement of subcriticality than it is with the method of maintaining subcriticality. In the interests of economy and practicality, a shipper should be allowed to exercise any practical controls he prefers in rendering a system subcritical; however, he should be prepared to present proof that his controls are adequate. This chapter deals with the determination of the kinds of evidence that should be considered as acceptable in proving that a system conforms to the criticality requirements of existing Federal regulations.

Federal regulations require every shipment of fissile material to remain subcritical at all times during normal transport, including loading and unloading, and under hypothetical accident conditions leading to the most reactive credible (MRC) configuration. In complying with these regulations, shippers of irradiated reactor fuels normally carry out a criticality evaluation of their casks.

Proof of system subcriticality can be satisfactorily substantiated with an experiment using the fuel in question, arranged in the MRC configuration with respect to the shipping cask design. Many times, however, such information is not available and proof of subcriticality is based on calculational methods that often lead to a more conservative design. It is, therefore, highly desirable to at least have the cask concept in mind when critical experiments are being performed to obtain information on the physics of a new reactor core. Under such conditions, additional experiments may be performed to predict the degree of subcriticality expected during shipment.

6.2 Methods of Prevention of Criticality

The criticality of a system is often discussed in terms of an effective multiplication factor, k_{eff}, which is defined as the ratio of the neutron production rate to the neutron loss rate in the system. The cask-

fuel system must remain subcritical so that k_{eff} is less than unity. This may be accomplished by the adjustment and control of several physical and nuclear variables that either limit the neutron production rate (i.e., fission rate) or provide an adequate neutron loss rate (capture plus leakage). These variables are:

1. Mass of fissionable material
2. Degree of moderation
3. Internal geometry details
4. Parasitic poison effectiveness
5. Geometrical shape of assembly
6. Reflector effectiveness

Control of the first three variables can serve to limit the fission rate either by limiting the amount of fissionable material or by controlling the energy and spatial distribution of the neutrons that cause fission. The second, third, and fourth factors may be adjusted to provide an adequate neutron loss rate through neutron capture, while the second, fifth, and sixth variables may be controlled to achieve the desired neutron leakage.

6.2.1 Application

The shipment of MTR-type fuel from the Swedish AER2 reactor is an example of a shipment in which the mass of fissionable material was the primary criticality control. Previous experiments at Oak Ridge had shown that, under optimum conditions, 2.5 kg of ^{235}U in MTR-type fuel elements would be required for criticality. The cask for the Swedish shipment was designed to hold nine fuel elements. The particular fuel to be shipped contained 200 g of ^{235}U per element, or a total of 1.8 kg. It was clear that this shipment was (and would remain) subcritical by virtue of a limited mass.

Fuel assembly geometry is usually fixed by the reactor design and is not altered for shipment. However, spacing between assemblies is sometimes changed to permit a less reactive separation. In this case, one

should note that the critical experiments that are performed during the reactor design may no longer be applicable to the cask-fuel assembly system unless they are performed using the geometry in question. Also, if the fuel assemblies are placed in an awkward or irregular geometry, the difficulty of a criticality evaluation is increased.

Moderation as a primary criticality control has been used for the shipment of large quantities of UF_6[1]; however, it has not often been used in the transportation of reactor fuel elements. This is due to the difficulty of guaranteeing the presence or absence of a moderator in the cask in the event of an accident. Since uranium enriched to less than approximately 5% in ^{235}U requires a moderator to make the system critical, limited moderation could serve as a criticality control parameter when the absence of moderation is assured.

Reflector effects are not normally used to control criticality because systems in casks are essentially fully reflected.

It is important to recognize that certain thicknesses of lead, steel, uranium, and similar shielding materials can be better neutron reflectors than water alone. Some calculations made by Battelle Memorial Institute,[31] Battelle Northwest,[32] Westinghouse,[33] and ORNL indicate that, depending on the geometry of the fuel considered, an increase in k_{eff} can occur when an infinite water reflector is replaced with a water-metal combination; for lead the increase may be 0.06 or higher.

The criticality control technique that has practical application in fuel transport is the use of fixed heterogeneous poisons. Large reductions in reactivity can be achieved with properly fabricated casks containing fixed neutron absorbers.

To be effective as the primary criticality control method, both the presence of the poison and the effectiveness of the poison must be guaranteed. Physical and chemical processes that could alter these two requirements include:

1. Selective leaching of the poison by coolants
2. Melting and redistribution of the poison

3. Mechanical fracture and redistribution of the poison

4. Loss of moderation near a thermal-neutron-absorbing poison

5. Failure to install the poison

The decay heat from irradiated fuel or large heat loads imposed by a fire could melt or soften a poison and change its geometry, thereby reducing its effectiveness. Such undesirable effects must be considered when using Boral (B_4C particles in aluminum), which softens below 800°C, or boron-impregnated polyethylene, which melts at about 100°C.

In addition to Boral and boron polyethylene, stainless steel clad boron, boron--stainless steel alloy, stainless-steel-clad cadmium, cadmium-copper, and cadmium-aluminum alloy have been used as poisons. The latter two materials have excellent heat transfer properties.

An example of a cask in which a heterogeneous fixed poison constituted a primary method of criticality control is shown in Fig. 2.37. This cask is capable of transporting 24 MTR-type fuel elements in two vertically stacked baskets. The central divider plates are constructed of Boral.

Liquid poisons are generally considered to be an unsatisfactory method for controlling the criticality of a fuel shipment because of the potential leakage problem that accompanies all shipments.

6.3 Normal Conditions of Transport

The purpose of a criticality analysis of a cask or transport system operating under normal conditions is to identify the nuclear characteristics that are expected to prevail during shipment and, in addition, to provide a point of departure for establishing the MRC condition that might reasonably result from an accident during transport (see Sect. 6.4). Normal conditions of transport are presented in annex 1 of the AEC Manual, Chapter 0529, and involve such environmental conditions as heat, cold, pressure, vibration, water spray, impact, and compression.

As part of the normal conditions of transport, the following factors should be considered:

1. Any differences in normal transportation and normal loading or unloading environments; that is, fuel is occasionally shipped dry but loaded or unloaded under water.
2. The expected configuration of the fuel-poison system. Is breakage, crumbling, or movement of the fuel, poisons, or supporting structural materials expected as a result of the vibration sustained during transportation and/or normal handling procedures?
3. The fissile classification for the shipment should be established in accordance with regulatory requirements.[2-4]
4. Dropping a fuel element during loading and unloading.
5. Changing the degree of moderation by adding fuel to, or removing it from, a cask.
6. Structural irregularities and heterogeneities that will exist in the inner cavity and that cannot or will not be rigorously represented in nuclear calculations and other forms of criticality evidence.
7. The actual reflector system during transportation; for example, 1 in. of water surrounded by 1/2 in. of steel, which is, in turn, surrounded by 9 in. of lead.
8. Expected corrosion in the inner cavity, which could result in redistribution of the fuel or poisons.

6.3.1 The Fresh Fuel Assumption

A criticality analysis should be made for the case where the fuel is in the most reactive condition in which it will be transported. If the reactivity of the fuel system continuously decreases with exposure, which is often the case, the nuclear analysis should be based on a cask containing fresh fuel unless there is no chance that a full load of fresh fuel might be stored or shipped in the cask. Usually, criticality analyses for the commercial thermal power reactors are made on this basis because, in addition, the physical form and the composition of fresh fuel are

known more accurately than those of irradiated fuel. Also, evidence of the behavior of a fresh fuel system may already be available from core design experiments and calculations. Moreover, the fresh fuel assumption could be quite realistic if it becomes necessary to remove and ship low-burnup fuel unexpectedly because of mechanical or other problems. If the reactivity of the fuel system increases at any time during irradiation, however, then the effect of burnup or reactivity should be considered, and the fresh fuel assumption may not be appropriate.

6.3.2 Burnup Effects on Reactivity

The shipper may want to consider fuel burnup so that he can ship more fuel in a given cask. If so, it will be necessary to determine the exposure at which the fuel system is most reactive under normal shipping conditions since the criticality analysis may have to be based on this condition. In any case, a minimum burnup must be determined so that a conservative value of k_{eff} may be established.

Because several key parameters are a function of exposure, and because the fuel exposure will probably not be uniform, the reactivity of irradiated fuel is more difficult to predict than the reactivity of fresh fuel. The following items must be considered when developing a criticality safety analysis for irradiated fuel:

1. Credit to be taken for burnup of the fissionable material.
2. Buildup of plutonium or ^{233}U.
3. Depletion of burnable poisons.
4. Credit to be taken for poisoning due to fission products.

The main problem in accounting for the burnup of ^{235}U is that the gradual control rod withdrawal and, in some cases, changes in moderator density during exposure make the axial variation of neutron flux (and therefore burnup) difficult to predict. In a region of low thermal and high resonance, flux, it is possible to generate more fuel than is consumed. If credit is taken for the burnup of fissile ^{235}U atoms, then the buildup of ^{239}Pu or ^{233}U must be considered. In most instances, however,

fission product production (which is usually not credited) will negate the effects of increased reactivity due to buildup of ^{239}Pu or ^{233}U.

It is recommended that, unless acceptable evidence is provided of the isotopic abundance of plutonium in the fuel, all plutonium be considered as ^{239}Pu. In a typical PWR reactor, about 70% of the total plutonium is fissile Pu.[5] It is important that statements of fissile concentration in irradiated fuel be supported by acceptable evidence, including the associated uncertainty of fissile content and the basis for determining that uncertainty.

Prior to 1967, credit for the burnup of ^{235}U was claimed in only one shipment of irradiated fuel. This shipment was an in-plant transfer of Yankee reactor fuel. Assuming no burnup, the calculated k_{eff} was about 0.97 for ten oxide fuel elements enriched to 4.1% in ^{235}U. The calculated k_{eff} for the fuel, assuming a burnup of 12,000 Mwd/metric ton U, was 0.88.

Many thermal power reactors use a burnable poison for power flattening and reactivity lifetime control. Often, the poison burns out faster than the fuel, resulting in an increased reactivity with burnup. This increase in reactivity may continue until most of the burnable poison is depleted; then the reactivity will begin to decrease due to fuel burnup. Again, the fuel system may reach its maximum reactivity some time after reactor startup, depending on the type, amount, and location of any burnable poisons in the system. Initially, the reactivity worth of burnable poison in power reactors is usually several percent and may be as large as $\Delta k_{eff} = 0.1$. Calculation of the poison reactivity worth as a function of exposure may be difficult because of nonuniform axial burnup as well as a changing flux depression in the poison. The problem of predicting burnable poison depletion can usually be sidestepped since it is normally conservative for a criticality calculation to neglect any poisoning effects due to burnable poisons. The rapid burnout of most poisons often leaves only a small poisoning effect after any appreciable burnup; thus, only a minor penalty in permissible payload may be incurred by neglecting it.

In order to support a claim of fission product poison worth, some valid treatment of fission product poisoning is needed. Very few experiments have been performed for comparison with calculations. However, one such comparison[6] indicated that an uncertainty of at least 10% can be expected in the calculated poisoning effects of fission products.

The effect of fission product poisoning has been treated in detail at Oak Ridge National Laboratory.[5] The uncertainty in the calculated fission product worth in irradiated fuels is estimated[7] to be less than 15%, using the Long Fission-Product Treatment (LFPT). This treatment is sufficiently detailed and established to permit its use as a validating calculational method. If a given fission product treatment compares favorably with LFPT (or some other similarly established treatment), it should be considered a safe engineering practice to allow credit for about two-thirds of the calculated fission product reactivity worth in the shipment of irradiated fuel.

Except for ^{135}Xe, about 95% of the fission product poisoning in thermal reactors results from fission products with half-lives greater than about two years. Excluding those fission products with half-lives of less than two years, a typical fission product worth in a pressurized water reactor is about 4 to 5% Δk for a burnup of 10 to 12,000 Mwd/metric ton U; for a burnup of 40,000 to 60,000 Mwd/metric ton U, the worth is about 6 to 7% Δk. The fractional neutron absorption by fission products tends to saturate at very high burnups, and the poison worth of long-lived fission products is not expected to exceed about 8% in any practical power reactor.

6.4 The Most Reactive Credible Condition of Transport

The most restrictive criticality requirement for nuclear safety in shipping is that the shipping container must remain subcritical in its most reactive credible configuration (MRC condition); such a configuration could result from a transportation accident. A series of hypothetical sequential accidents which could affect cask reactivity is described in the regulations and consists essentially of: (1) a 30-ft free fall onto

a solid, unyielding surface, (2) a 40-in. drop onto a 6-in.-diam piston, (3) exposure to a 1475°F fire for 1/2-hr, and (4) immersion in 3 ft of water for at least eight hours.

Some typical problems that must be considered when determining the condition of a cask after the accident series are given below.

1. The fuel, fixed poisons, and moderators may become broken and redistributed into a more reactive configuration. This is particularly important for irradiated ceramic fuels with long expsoures and brittle cladding.

2. Optimum moderation and/or reflection by water may occur inside and outside the cask as a result of impact damage followed by immersion or loss of coolant.

3. Loss of coolant may cause melting of fuel and/or nuclear poisons, resulting in redistribution into a more reactive configuration. Irradiated fuels with intense gamma heating and fixed neutron absorbers with low melting temperatures are cases in point.

4. Unless specifically designed to prevent such an occurrence, inleakage of water after impact may result in a violent reaction with Na- or NaK-bonded fuels, causing redistribution of the fuel into a more reactive configuration.

5. Under certain conditions, radioactive decay may increase reactivity while the fuel is in the cask. For example, in the case of thorium-bearing fuels, the decay of ^{233}Pa to ^{233}U can increase the inventory of fissionable material.

6. Nuclear interaction with fissile material in neighboring casks should be considered.

6.5 Criticality Evidence

When the normal and MRC conditions have been identified for a particular fuel shipment, various types of criticality evidence may be compiled. If relatively small quantities of fissile material are involved,

it may only be necessary to provide assurance that certain exemption limits on the fuel system parameters will not be exceeded. For larger shipments with highly heterogeneous fuel-poison geometries and compositions, experimental evidence and well-validated calculational evidence may be necessary. The purpose of this section is to point out the kinds of evidence that should be considered acceptable in determining whether, and to what degree, a system will remain subcritical in the normal and MRC conditions; emphasis is on the application to low-enriched water-moderated power reactor fuels.

6.5.1 Safe Limits

Many shipments of fissile material will be made which exceed the exempt quantities and yet are small enough not to pose a serious criticality problem. Parametric limits below which criticality cannot occur in single units are considered in various nuclear safety guides.[7-12] Some of these parametric limits, modified by a safety factor, are given in Table 6.1.

Table 6.1. Parametric Limits for Criticality of Single Units[a]

Parameter	Limit	
	^{235}U	^{239}Pu
Mass, g	700	500
Cylinder diameter, cm	13.5	12.5
Slab thickness, cm	4.38	3.6
Volume, liters	5.8	5.5
Concentration, g/liter	11.0	7.0
^{235}U enrichment, wt %	1.0	-

[a]This assumes that the unit is isolated and, therefore, has no interaction with other fissile materials.

If any one of the limits in Table 6.1 and the conditions for which it applies are maintained, the system cannot become critical under the considered accident conditions. The limits are for uniform aqueous solutions and do not apply to heterogeneous systems. In addition, the limits are only applicable when the multiplication factor of the system in the presence of neighboring reflectors, fissionable materials, and fissionable sources in less than, or equal to, the multiplication factor of the system with an infinite reflector of water.

A safety standard that will specify single parameter limits for use in maintaining the nuclear safety of fissionable materials is now in publication.[13] This document is intended as a revision of the American Standard ASA N6.1-1964 and is being prepared by Subcommittee ANS-8 of the Standards Committee of the American Nuclear Society. The parameter limits of the standard are expected to be close to the values given in Table 6.1 and, in addition, are more comprehensive.

6.5.2 Calculational Evidence

The purpose of this Guide is not to require that certain evidence be developed using specific codes and cross sections; it is assumed that competent personnel utilizing their own machines, codes, and cross sections can produce reliable evidence as to the k_{eff} of the system in question. However, it is necessary to provide a framework by which the AEC can assess the confidence level expected in the calculation of k_{eff}. For example, an acceptable calculation of the k_{eff} of a fissile assembly should have, as a supporting basis, at least one favorable comparison of the calculational method with an experiment having a fuel-moderator – poison-reflector system similar to the given assembly in the MRC condition. If heterogeneous neutron absorbers are present in the system to be shipped, it would be desirable that the calculation be compared with an experiment having the same poison material (including basket material such as copper, etc.) and approximately the same poison concentration, geometry, and associated neutron energy spectrum as the system in the MRC condition. If the presence of neighboring fissile assemblies is included in the MRC condition, the calculational-experimental comparison should be made on a critical

experiment having the same interspersed moderator and approximately the same size and edge-to-edge spacing of individual assemblies.

If similar experimental evidence does not exist, two or more experiments should be calculated to bracket the parameters of interest over a fairly narrow range. A certain amount of judgment will be required to establish a reasonable parameter range. As a rough estimate for water-moderated power reactors, the fuel rod diameter, water-to-uranium volume ratio, volume fraction of webbing, and ^{235}U enrichment of the assembly of interest should not differ by more than about 20% from the corresponding parameters in the validating critical experiment.

The supporting calculational comparisons should use the same assumptions, computer codes, homogenization schemes, input data preparation, neutron energy group structure, and basic cross sections as the calculation that is to provide acceptable evidence of subcriticality during transportation. The sophistication of the calculational technique is not overly important in establishing the reliability and accuracy of the method over a narrow range of parameters. Criticality calculations are somewhat of an art, and it is possible for a two-group diffusion calculation of k_{eff} to give better results than a ten-group S_{16} transport calculation, particularly if the parameters of the diffusion calculation happen to be tailored to the specific problem at hand. It is important, however, that any calculational technique be validated by comparison with experimental results for the parameter range of interest. As an aid in finding related critical experiment data for use in the calibration of calculational techniques, a bibliography of selected references has been prepared and is presented in the Appendix. Each reference is accompanied by a brief description of the nuclear system(s) investigated.

Regardless of the form and quality of calculational evidence, an error analysis that indicates the uncertainty in the calculated k_{eff} should be performed. Generally, a calculation will have greater accuracy if the system being described is just critical; therefore, the detail of the error analysis should be commensurate with the proximity of the nuclear system to the critical condition.

Methods of calculation have been fairly well established for isolated fissile assemblies similar to water-moderated thermal power reactors.[14,15] Experience has shown[16-18] that, with the exercise of reasonable care, it is possible to predict k_{eff} in thermal reactors within about 1 to 2%. In contrast, accurate calculational methods and nuclear cross section data have not yet been generally established for unmoderated systems. A recent comparison of calculations for a dilute plutonium-fueled fast critical assembly of particularly simple design indicated[19] that calculated values of k_{eff} deviated from experimental values over the range from -3.6% to +2.4%. The calculations were submitted by domestic and foreign laboratories and by private industry. On the basis of the above comparison, and in view of the general lack of experience in calculations for unmoderated assemblies, we recommend that special attention be given to the calculational techniques for unmoderated assemblies to ensure that the results are reasonably conservative.

When several casks are to be transported in close proximity to each other, the calculation of interaction effects between neighboring assemblies is often necessary. The multiple-assembly analysis is usually the source of a greater uncertainty in the calculated k_{eff} than for a single isolated assembly. Several calculational methods that may be used to treat the interaction effect have been developed. The three methods used most extensively in the United States are the density analog method,[20] the solid angle (interaction potential) method,[21,22] and the Monte Carlo method.[23] The Monte Carlo method is superior to the others from the standpoints of accuracy and capability for representing geometrically complicated configurations; several computer codes employing the technique are available for criticality calculations.[24-26] Although only limited experience with this method in the United States,[26,27] indicates that k_{eff} may be predicted with an uncertainty of about 2%, it is being utilized to a much greater extent than ever before.

Considerable experience has been accumulated with the solid angle and density analog methods, both of which give conservative estimates of k_{eff} when properly used. Comparisons with data obtained by experiment[28] indicate that the criticality factor of a regular air-spaced array may be

calculated with an accuracy of about 5 to 10% using the solid angle method. Results of the density analog method have been verified with experimental results; and, because of its simplicity, versatility, and accuracy, this method has been recommended by Brown[29] as the most applicable one for transportation problems. It may also be used to extend the information already obtained from Monte Carlo calculations.

The above-mentioned methods for treating interaction effects have been evaluated in experiments using regular air-spaced arrays of similar units containing highly enriched fuel. Until more experience is obtained, none of the methods should be considered as proved for application to low-enriched arrays having an interspersed moderator (particularly a hydrogenous material); two different methods might be used for such an application, one as a check on the other.

In summary, the following guideline is recommended for evaluating the acceptability of calculational evidence. If a calculational technique has been properly validated by comparison with critical experiments having a geometry and composition similar to the assembly under consideration, a calculation, using this technique, for the system in the MRC condition should generally be considered as sufficient evidence of subcriticality for the safe transport of low-enriched, well-moderated power reactor fuels provided the system has a k_{eff} below about 0.95. (This is not a firm limit and should be a function of the judgment of the analyst.) Above this approximate level of reactivity, calculational evidence should be supplemented with some type of experimental evidence. For high-enriched or unmoderated systems, supplemental experimental evidence may be desirable even if the calculation indicates a system k_{eff} of less than 0.95 because of the greater change in k_{eff} with small changes in size, mass, or moderation of the system.

6.5.3 Experimental Evidence

Two general types of experimental evidence are considered below: (1) related evidence, which includes relevant data from safety guides and also critical experiments on the given fuel under conditions different from those expected in transport, and (2) direct evidence, which includes

reactivity determinations for loaded casks in the normal and/or MRC conditions. While critical experiments with irradiated fuel elements could be considered excellent direct evidence, such experiments are rarely performed in a shipping cask environment and are not included in this discussion.

Related Evidence: Critical Experiments Before Irradiation. — Perhaps the most convincing criticality evidence is derived from critical experiments with the given fuel before irradiation. This type of experiment is often carried out during the design of a reactor. The evidence is particularly useful if the fuel elements can be shown to have maximum reactivity (at any time during life) when they are fresh and unirradiated. The minimum number of fresh fuel elements required for criticality can then be established. If this number is determined for a cask-fuel system in the MRC condition, it should be considered excellent criticality evidence. Advance planning could provide data for a specific fuel-moderator-basket — poison-reflector system which would be considered excellent evidence in establishing a case for subcriticality of a given system. In the past, core design critical experiments have not been used to full advantage in providing criticality evidence for future shipping and storage safety requirements.

Related Evidence: Safety Guides and Criticality Data. — The most readily available sources of criticality evidence are the nuclear safety guides.[8,10,12,13] These systematic presentations of experimental criticality data are extremely useful in estimating nuclearly safe dimensions, masses, moderator-to-fuel ratios, etc. for a variety of systems. Data from safety guides constitute excellent criticality evidence for many homogeneous and simple heterogeneous fuel systems. The safety guides also have established some safe nuclear parameter correlations which represent excellent evidence when they are applicable. In the case of more complicated systems, cautious extrapolation and interpolation of criticality data may be necessary. Many commercial reactor fuel shipments contain poison rods, fuel rods of several enrichments and diameters, etc.;

for these complex systems, the quality of criticality evidence obtained from safety guides should be judged on the basis of the amount of extrapolation or interpolation involved.

Direct Evidence. – Direct experimental methods of reactivity determination represent a potential source of excellent criticality evidence. An advantage of this type of evidence is that the measurements can be made on the system that is of interest, for example, a loaded shipping cask submerged in water or a storage array. Because of the effort and equipment usually required, this type of experiment is normally not performed on shipping casks except when the loading procedure must be monitored. However, if the confidence derived from such an experiment would permit a significantly greater amount of fuel to be shipped than is ordinarily the case, the performance of such an experiment on a shipping cask might be justified.

Several experimental techniques for reactivity measurements have been discussed by Keepin.[30] Methods that are most applicable to loaded shipping casks include: the multiplication measurement, the pulsed neutron method, the Rossi-α technique, and the source-jerk experiment. In general, the present technology of the multiplication experiment is inadequate for the accurate prediction of k_{eff}. However, a multiplication experiment can serve as a useful monitoring procedure during the loading of fuel into a shipping cask.

The best technique for evaluating the reactivity of subcritical moderated assemblies appears to be the pulsed neutron method. The prompt fundamental decay constant, α, can be measured quite accurately and, when normalized by a measurement at a known k_{eff} or supplemented with a calculation of prompt neutron lifetime, can be used to establish a value of k_{eff} with an accuracy of several percent for $0.9 < k_{eff} < 1.00$. Approximately this same accuracy can be obtained from the Rossi-α method when it is applied to unmoderated, strongly-coupled, fast-neutron systems. Considerably less accuracy is to be expected from Rossi-α measurements on well-moderated systems. Experience with the source-jerk technique has been limited in the United States, and its limitations should be understood before employing it.

Problems of measurement and interpretation of data accompany each of the direct experimental methods. For example, in the presence of strong gamma-ray activity such as that associated with irradiated fuel elements, one must assure himself that his detector response is primarily determined by the neutron flux and not the gamma rays. As another example, the measured data (and consequently the inferred value of k_{eff}) will probably vary with detector location and several detectors may be necessary to get an accurate space-averaged result. Reasonable care and attention must be given to such problems to obtain the accuracy mentioned above.

6.6 References

1. C. E. Newlon and A. J. Mallett, Hydrogen Moderation - A Primary Nuclear Safety Control for Handling and Transporting Low Enrichment UF_6, K-1663 (May 31, 1966).
2. U.S. Atomic Energy Commission, "Packaging of Radioactive Material for Transport," Title 10, Part 71, Code of Federal Regulations Jan. 1, 1969.
3. U.S. Atomic Energy Commission, "Safety Standards for the Packaging of Radioactive and Fissile Materials," AEC Manual Chapter 0529, Aug. 22, 1966.
4. Regulations for the Safe Transport of Radioactive Materials, Safety Series No. 6, International Atomic Energy Agency, Vienna, 1965.
5. M. W. Rosenthal et al., A Comparative Evaluation of Advanced Converters, ORNL-3686 (January 1965), pp. 146-179.
6. T. R. England, Time-Dependent Fission-Product Thermal and Resonance Absorption Cross Sections, SAPD-TM-333 (Nov. 1962), p. 48.
7. L. L. Bennett and D. R. Vondy, ORNL, private communication, January 1967.
8. American Standards Association Sectional Committee N6, Project 8 of the American Nuclear Society Standards Committee, Nuclear Safety Guide, TID-7016 (Rev. 1), 1961.

9. H. K. Clark, Handbook of Nuclear Safety, DP-532 (January 1961).

10. H. C. Paxton, J. T. Thomas, A. D. Callihan, and E. B. Johnson, Critical Dimensions of Systems Containing ^{235}U, ^{239}Pu, and ^{233}U, TID-7028 (June 1964).

11. American Standards Association Sectional Committee N6, "Safety Standard for Operation with Fissionable Materials Outside Reactor," American Standard ASA N. 1-1964, published by The American Society of Mechanical Engineers.

12. American Standards Association Sectional Committee N5, "Guide for Design and Operation of Shipping Containers for Irradiated Solid Fuel from Nuclear Reactors," American Standard ASA N5.3-1964, published by The American Institute of Chemical Engineers.

13. Nuclear Criticality Safety Standard for Operations with Fissionable Materials Outside Reactors, USASI N16.1 - 1969 (in publication). To be available from American Nuclear Society, 244 East Ogden Avenue, Hinsdale, Illinois 60521.

14. A. Radkowsky (ed.), Naval Reactors Physics Handbook, Vol. I, Superintendent of Documents, Government Printing Office, Washington, D. C. 20402, 1964.

15. Argonne National Laboratory, Reactor Physics Constants, ANL-5800 (July 1963).

16. Panel on Light Water Lattices, Light Water Lattices, Report of a Panel Held in Vienna, June 1, 1962, Technical Report Series No. 12, IAEA.

17. L. E. Strawbridge, Calculation of Lattice Parameters and Criticality for Uniform Water Moderated Lattices, WCAP-3269-25 (September 1963), p. 25.

18. G. E. Edison and M. L. Winton, Power Distribution and Reactivity Calculations for the MH-IA Reactor, ORNL-TM-1654 (January 1967), p. 10.

19. W. G. Davey, "Intercomparison of Calculations for a Dilute Plutonium-Fueled Fast Critical Assembly (ZPR-3 Assembly 48)," paper presented at International Conference on Fast Critical Experiments and Their Analysis, ANL, October 10-13, 1966.

20. H. C. Paxton, Criticality Control in Operations with Fissile Material, LA-3366 (December 1964), p. 32.

21. H. F. Henry, J. R. Knight, and C. E. Newlon, Self-Consistent Criteria for Evaluation of Neutron Interaction, K-1317 (December 1956).

22. H. F. Henry, C. E. Newlon, and J. R. Knight, Extensions of Neutron Interaction Criteria, K-1478 (July 1961).

23. M. A. Meyer (ed.), Symposium on Monte Carlo Methods, Wiley, New York, 1956.

24. T. C. Longworth, "The GEM Monte Carlo Code and Its Use in Solving Criticality Problems," Proceedings of the Symposium on Criticality Control of Fissile Materials, Stockholm, November, 1965.

25. D. C. Irving, R. M. Freestone, Jr., and F. B. K. Kam, 05R, A General-Purpose Monte Carlo Neutron Transport Code, ORNL-3622 (February 1965).

26. G. E. Whitesides, G. W. Morrison, and E. C. Crume, "Few-Group Monte Carlo Criticality Calculations," Trans. Am. Nucl. Soc. 9 (No. 1), 133 (1966).

27. E. C. Crume, Jr., The Reliability of Criticality Safety Calculations Using the New Codes CSC and KENO, Y-KC-96, (Apr. 21, 1967).

28. C. E. Newlon, The Elements of Neutron Interacting Arrays-Part I, K-1619 (October 1964).

29. C. L. Brown, "Criticality Safety in Transportation and Storage," Proceedings, Nuclear Criticality Safety, p. 177, December 13, 1966.

30. G. R. Keepin, Chapter 8 of Physics of Nuclear Kinetics, Addison-Wesley Publishing Co., Inc., 1965.

31. J. D. Rollins, Battelle Memorial Institute, personal communication.

32. C. L. Brown, Battelle Northwest, personal communication.

33. G. Klotzkin et al., The Reactivity Effect of Replacing a Water Reflector With Lead, Trans. Am. Nucl. Soc. 12 (No. 1), 337 (1969).

6.7 Bibliography of Critical Experiments

A bibliography of selected critical experiments is presented for use in validating calculational methods of reactor analysis. Only systems with a well-defined geometry and composition are included. The experiments are classified according to the system parameter of major interest. Particular attention was given to water-cooled and -moderated uranium systems of low enrichment since these make up the bulk of power reactor fuel shipments. The bibliography is accompanied by a concise description of the nuclear systems investigated in each reference.

A. Low-Enriched UO_2; Water Moderated

A1. P. W. Davison et al., Yankee Critical Experiments - Measurements on Lattices of Stainless Steel Clad Slightly Enriched Uranium Dioxide Fuel Rods in Light Water, UAEC-94 (April 1959).

A2. P. W. Davison et al., Two Region Critical Experiments with Water Moderated Slightly Enriched UO_2 Lattices, YAEC-142 (November 1959).

A3. R. D. Leamer et al., Critical Experiments Performed with Clustered and Uniform Arrays of Rodded Absorbers, WCAP-3269-39 (November 1965).

A4. R. M. Ball, A. L. MacKinney, and J. H. Mortenson, MARTY Critical Experiments Summary of 4%-Enriched UO_2 Cores Studied for NMSR, BAW-1216 (May 1961).

A5. Quarterly Technical Report, SPERT Project, IDO-17030 (April 1964) p. 40.

References A1, A2, and A3

Critical experiments were performed with stainless-steel-clad UO_2 rods of 2.7, 3.7, and 4.4% enrichment. An unclad fuel pellet diameter

of 0.300 in. was used. The square lattice pitch was in the range 0.4 to 0.7 in., permitting (water to uranium) ratios between 2 and 11. The oxide density was about 10.2 g/cm^3. Cylindrical configurations with an active height of 4 ft with water reflected. In some of the experiments at 3.7% enrichment, 0.4-in.-diam pellets clad with Zircaloy 4 were used. A few experiments were also done with 5.7%-enriched pellets 0.357 in. in diameter.

Reference A4

Lattices of UO_2 rods enriched to 3% and 4% were investigated using a square pitch of about 0.6 in. An unclad fuel pin diameter of 0.444 in. resulted in water to uranium ratios of 2.6 and 3.6. The fuel had a density of about 7.2 g/cm^3 and was clad in either stainless steel or aluminum. The lattices were cylindrical, with a water reflector and an active fuel height of about 5-1/2 ft.

Reference A5

Uranium dioxide rods of 4.8% enrichment were studied in the course of the SPERT project. The fuel pellets, 0.420 in. in diameter were clad with stainless steel and aluminum and had an oxide density of 10.5 g/cm^3. The square lattice pitch was about 0.6 in. The water to uranium ratio appears to be less than 1.0; nonmoderator-to-moderator ratios of 1.9 and 2.2 were reported. Both cylindrical and rectangular configurations were made, with an active fuel length of 38.3 in.

B. Low-Enriched Uranium Metal; Water Moderated

B1. W. G. Davey and K. R. Smith, Exponential Experiments with Enriched Uranium-Natural Water Systems, British Report AERE-RP/R-1788 (October 1955).

B2. H. Kouts and R. Sher, Experimental Studies of Slightly Enriched Uranium, Water Moderated Lattices, BNL-486 (T-111) (September 1957).

B3. C. R. Richey, R. C. Lloyd, and E. D. Clayton, "Criticality of Slightly Enriched Uranium in Water Moderated Lattices," Nucl. Sci. Eng. 21; 217 (1965).

B4. J. K. Fox, J. T. Mihalczo, and L. W. Gilley, Critical Experiments with 2.09% ^{235}U Enriched Uranium Metal Plates in Water, ORNL-CF-58-8-3, 1958.

B5. E. B. Johnson, "Critical Lattices of U(4.98) Metal Rods in Water," Trans. Am. Nucl. Soc. 10, 190 (1967).

E. B. Johnson, "Critical Lattices of U(4.98) Rods in Water and in Aqueous Boron Solution," Trans. Am. Nucl. Soc. 11, 674 (1968).

E. B. Johnson, "Criticality of Uranium of Low Enrichment in Water," Trans. Am. Nucl. Soc. 12, 336 (1969).

Reference B1

Most of the square pitch lattice experiments with uranium metal were performed at Harwell Laboratory in England. One series of exponential and approach-to-critical experiments used metal rods of 0.93% enrichment with both aluminum and stainless steel cladding. The unclad fuel rod diameters were 0.75 and 1.20 in. The lattice pitch varied from 0.94 to 1.85 in., corresponding to a water to uranium range of 0.59 to 1.94. Water reflected cylindrical configurations with an active fuel length of about 30 in. were employed.

Reference B2

A series of exponential experiments was performed at BNL using 1.0, 1.15, and 3.3% enriched uranium metal rods clad with aluminum. The unclad fuel rod diameter was 0.600 in., and the active length was 4 ft. The triangular pitch was varied between 0.85 and 1.31 in. to give a water to uranium ratio ranging from 1 to 4. Cylindrical core configurations were arranged with a water reflector.

Reference B3

Approach-to-critical and exponential experiments with unclad uranium metal rods of 2.0% and 3.06% enrichment were carried out at Hanford. The triangular pitch was varied from about 0.28 to 1.81 in. for fuel rods whose diameters ranged from 0.175 to 0.925 in. The water to uranium ratio varied from about 2 to 12. Water-reflected cylindrical configurations were used, with the active height varying from about 16 to 32 in.

Reference B4

Uranium metal plates enriched to 2.09% were studied at ORNL. The plate spacing varied from 0.0 to 5/8 in. Groups of plates were also studied with group spacings of 5/8 to 1-1/8 in. The plate size was 1/4 in. thick, 3-1/8 in. wide, and 30 in. long. The water to uranium ratio varied from 2.5 to 4.5. Rectangular geometry with a water reflector was used in many cases.

Reference B5

Currently, critical experiments with 4.9%-enriched uranium metal rods are under way at ORNL. Unclad rods of different diameters up to 1 in. are being studied in both triangular and square pitch lattices. The results for 0.5- and 0.8-in.-diam rods are available. Lattice pitch is expected to be varied from about 0 to 2.4 in., with resulting water to uranium ratios of about 2 to 12. Water-reflected configurations with active fuel lengths of about 12 and 24 in. have been constructed in rectangular and cylindrical geometries.

C. Highly Enriched Uranium

C1. J. C. Hoogtemp, Critical Masses of Oralloy Lattices Immersed in Water, LA-2026 (November 1955).

C2. J. K. Fox, L. W. Gilley, and A. D. Callihan, Critical Mass Studies, Part IX, Aqueous ^{235}U Solutions, ORNL-2367 (March 1958).

C3. E. B. Johnson and R. K. Reedy, Critical Experiments with SPERT-D Fuel Elements, ORNL-TM-1207 (July 1965).

C4. G. E. Hansen *et al.*, "Critical Plutonium and Enriched-Uranium Metal Cylinders of Extreme Shape," Nucl. Sci. Eng. 8, 570 (1960).

Reference C1

Multiplication measurements at Los Alamos were used to determine critical mass data for fully enriched uranium metal. Lattices of unclad metal cubes having an edge length up to 1 in. were arranged into cubic arrays with water as moderator and reflector. The square lattice pitch was varied from 0.75 to 2.25 in. Some experiments were done with rods

in cylindrical arrays. The rods were 1/8 in. in diameter, and the pitch ranged from 0.5 to 1 in. Water-to-uranium volume ratios varied up to about 80.

Reference C2

Critical experiments were performed with homogeneous solutions of fully enriched uranium. The solutions had $H/^{235}U$ atom ratios between 27.1 and 74.6. Experiments were made with (and also without) a water reflector and with and without a cadmium lining in the container. In some cases, interacting arrays of as many as seven vessels were tested. Cylindrical vessels of diameters up to 30 in. were used.

Reference C3

A series of water-moderated and -reflected experiments with SPERT-D fuel elements were performed at ORNL. The spacing between fuel in adjacent elements was varied up to about 2 in. Rectangular geometry was used in all cases except one in which a rounded lattice was made. The elements were 2 ft long in most experiments; however, a few experiments were done with 6-ft elements. The fuel element consists of a 3-in.-square aluminum alloy tube containing 22 parallel fuel plates 60 mils thick and spaced 47 mils apart. Each fuel plate is a 20-mil-thick alloy of uranium and aluminum containing 23.8 wt % of fully enriched uranium sandwiched between two 20-mil thicknesses of aluminum alloy cladding. In some of the experiments, the outer rows of elements were only partially loaded to achieve criticality; the individual plates were removable.

Reference C4

Multiplication measurements were used to establish critical configurations with: (1) fully enriched uranium metal, and (2) plutonium metal of composition 95% ^{239}Pu and 5% ^{240}Pu. Elongated and squat cylinders of extreme shape were built up, having height/diameter ratios ranging from about 0.05/0.3 and 4/15.

The uranium cylinders were of two diameters: 15.00 and 3.24 in. The plutonium cylinder diameters were 2.2 and 6.0 in. Experiments were made with different reflectors including water, uranium, graphite, polyethylene, and beryllium.

D. Critical Experiments with Poisons

D1. E. B. Johnson and R. K. Reedy, Jr., Critical Experiments with SPERT-D Fuel Elements, ORNL-TM-1207 (July 1965).

D2. G. D. Hickman, J. A. Bistline, and L. A. MacNaughton, "Water Moderated Cores with Boron Steel Septa at Elevated Temperatures," Nucl. Sci. Eng. 8, 381 (1960).

D3. R. A. Haffley, R. A. Watson, and W. Skolnik, Measurement and Calculation of Relative Poison to Fuel Capture Ratios in Slab Cores, KAPL-M-6528 (November 1965).

D4. R. H. Clark, M. L. Batch, and T. G. Pitts, Lumped Burnable Poison Program - Final Report, BAW-3492-1 (January 1966).

D5. P. W. Davison et al., Yankee Critical Experiments - Measurements on Lattices of Stainless Steel Clad Slightly Enriched Uranium Dioxide Fuel Rods in Light Water, YAEC-94 (April 1959).

D6. E. B. Johnson et al., Applied Nuclear Physics Division Annual Progress Report, ORNL-2389 (September 1957), p. 3.

Reference D1

In some of the experiments with SPERT-D fuel elements, already described under reference C3, 25-mil-thick cadmium plates were inserted in the water gaps between rows of elements. Also, in a few experiments, soluble boron was added to a dilute solution of uranyl nitrate which served as moderator and reflector.

References D2 and D3

Experiments were conducted at KAPL using boron--stainless steel plates and Ni-^{10} plates. The boron--stainless steel plates were 30 mils thick and contained various loadings of ^{10}B up to 1.24 wt %. The Ni-^{10}B plates were 50 mils thick, with a ^{10}B content of 0.55 wt %. In some of the experiments, water gaps were introduced near the poison; in others, the plates were placed near the water reflector. The fuel lattice consisted of Zircaloy-clad fully enriched uranium metal plates 1.61 in. wide and 0.0015 in. thick, with 13-mil and 38-mil water gaps and 29-mil Zircaloy spacer plates interspersed.

Reference D4

Lumped poison experiments were performed by Babcock and Wilcox. Borosilicate glass rods (12.6% B_2O_3) of 0.460- and 0.326-in. diameters were used as well as 0.326-in.-diam silica glass rods (3.00% B_2O_3) and aluminum-clad B_4C rods. The poison rods were substituted for fuel rods at various locations. The fuel consisted of UO_2 rods of 2.5 and 4% enrichment with OD = 0.475 in. The square lattice pitch was 0.644 in., corresponding to a nonmoderator to moderator volume ratio of 0.750. The oxide density was 9.5 to 10.2 g/cm^3. The active fuel length was about 5 ft for the 2.5%-enriched rods and about 5-1/2 ft for the 4%-enriched rods.

Reference D5

A number of critical experiments were conducted with the Yankee 2.7%-enriched UO_2 using soluble boron (boric acid) in the moderator. A summary of the lattice parameters is given under the reference A1.

Reference D6

Experiments with stainless steel and boron-loaded aluminum plates were performed using BSR fuel elements (see description of reference C6). The steel plates ranged in thickness from 32 to 125 mils. The B_4C aluminum plates had boron loadings from 1 to 50 g of natural boron and were clad with aluminum. The plates with 16 g or less of boron were 52 mils thick, and the plates with higher loadings were 114 mils thick. The poison plates were substituted for fuel plates at several different positions.

E. Critical Experiments with Different Reflectors

E1. E. C. Mallary, Oralloy Cylindrical Shape Factor and Critical Mass Measurements in Graphite, Paraffin, and Water Tampers, LA-1305 (October 1951).

E2. R. E. Donaldson and W. K. Brown, Critical Mass Determinations of Lead-Reflected Systems, UCRL-5255, June 1958.

E3. G. E. Hansen and D. P. Wood, Precision Critical Mass Determinations for Oralloy and Plutonium in Spherical Tuballoy Tampers, LA-1356 (February 1952).

E4. G. E. Hansen, H. C. Paxton, and D. P. Wood, Critical Masses of Oralloy in Thin Reflectors, LA-2203 (January 1958).

E5. R. C. Lane and O. J. E. Perkins, Measurements of the Critical Mass of 37-1/2% Enriched Uranium in Reflectors of Wood, Concrete, Polyethylene and Water, AWRE Report No. NR 1/66 (February 1966).

E6. E. B. Johnson, Oak Ridge National Laboratory, private communication, December 1966.

Reference E1

Multiplication experiments were done using infinite reflectors of graphite, paraffin, and water. Reciprocal multiplication plots were extrapolated to yield critical masses. The cores were unmoderated cylinders or spheres of 93.9%-enriched uranium. The core diameters ranged from 3.25 to 12.4 in.; most of the units had diameters between 4 and 7.5 in.

Reference E2

Spheres and cylinders of fully enriched uranium reflected by lead were the subjects of multiplication measurements at Livermore. The uranium cylinder diameters were about 3.9 and 4.4 in., and the sphere diameters were 5.6 and 5.9 in. Critical sizes were determined for lead thicknesses of about 3.5, 5.0, 5.2, and 6.8 in. The lead density was 11.3 g/cm^3.

Reference E3

Multiplication measurements were made using a natural uranium reflector of different thicknesses up to 9 in. The spherical core was made of fully enriched uranium. Some experiments used a spherical plutonium core with a natural uranium reflector.

Reference E4

Critical masses were determined for 5-1/4-in.-diam cylinders of fully enriched uranium surrounded by 1/2- and 1-in.-thick reflectors of Be, graphite, Mg, Al, Ti, steel, Cu, W alloy, natural U, Ni, Co, Mo, Al_2O_3, Mo_2C, and polyethylene. Also, critical masses were measured for fully enriched uranium spheres with ~2- and ~4-in.-thick reflectors of W alloy, Fe, Ni, Ni-Ag, Cu, Zn, Th, Be, BeO, C, and natural U. Extrapolated inverse multiplication data were used to establish critical masses. Values of reflector savings were also determined.

Reference E5

Safety-oriented experiments were done at Aldermaston, England, using reflectors of wood, concrete, polyethylene, and water. The reflector thickness was varied up to about 8 in. Unmoderated stacks of uranium metal plates of 37.7% enrichment were used for the cores, which had slab and rectangular geometries. The reflector densities were: (1) wood, 0.693 g/cm^3; (2) concrete, 2.37 g/cm^3; (3) polyethylene, 0.919 g/cm^3; and (4) water, 1.0 g/cm^3. The water content of the concrete was 7.85 wt %, of which 2.64 wt % could be driven off by heating. Reflector savings as well as critical masses and dimensions, were determined.

Reference E6

In some of the experiments currently in progress at ORNL (described under reference B5) with 4.9%-enriched water-moderated uranium metal rods, reflectors of lead, steel, and water have been used in thicknesses up to 8 in. Also, the water gap between fuel and reflector was varied from 0 to 4 in. The fuel was arrayed in rectangular geometry, and the reflectors were placed on one or two sides, leaving water on the others. Critical sizes and reactivity worths were determined by the calibrated water-height method.

F. Arrays of Interacting Units

F1. J. T. Thomas, Critical Three-Dimensional Arrays of Neutron-Interacting Units, ORNL-TM-719 (October 1963).

F2. L. W. Gillet et al., Critical Arrays of Neutron Interacting Units, ORNL-3193 (September 1961), p. 159.

F3. J. K. Fox, L. W. Gilley, and A. D. Callihan, Critical Mass Studies, Part IX, Aqueous ^{235}U Solutions, ORNL-2367 (March 1958).

Reference F1

Five-liter cylinders of concentrated uranyl nitrate solution were arranged in critical arrays. The uranium concentrations were 63.3, 279, and 415 g/liter, with a ^{235}U content of 92.6 wt %, resulting in $H/^{235}U$ atom ratios of 440, 92, and 59 respectively. The Plexiglas cylinders that contained the fuel were about 8 in. in diameter and 7-1/2 in. high, and had a 1/4-in.-wall thickness. The surface-to-surface separation of the cylindrical units ranged from 0 to 6-1/2 in. Arrays of 8, 27, 64, and 125 units were assembled in cubic and parallelepipedal geometry. Some of the arrays were reflected by paraffin and Plexiglas in thicknesses up to 6 in.

Reference F2

Cylindrical bottles of enriched uranyl nitrate were arranged into arrays of as many as 100 units. In some experiments, neither a reflector around the arrays nor an interspersed moderator was present. In others, the moderator and reflector thickness was varied. The fuel concentration was 410 g of uranium (containing 92.6 wt % ^{235}U) per liter. Three kinds of cylindrical bottles were used. Two were of polyethylene with inner diameters of about 4.7 and 5.1 in., a length of about 4 ft, and capacities of about 13 and 15 liters respectively. The third type of container was a 6-ft-long aluminum cylinder with a 6-in. ID. The units were arranged vertically with their bases in a linear, square, or triangular pattern. Surface-to-surface spacings up to 8-1/2 in. were employed. The array periphery was either square or hexagonal.

Reference F3

In some of the experiments described under reference C2, interacting arrays of as many as seven cylinders of fully enriched uranyl nitrate were constructed. The cylinders were arranged in hexagonal, triangular,

and linear patterns with edge-to-edge spacings up to 24.5 in. One set of experiments was performed with three units in a triangular pattern. One of the cylinders was then moved to various positions, forming isosceles triangles with different vertex angles.

7. SHIELDING

7.1 General Considerations

The shielding of any shipping cask must reduce the external dose rate from the largest expected source to below specified tolerance levels. Usually, such shielding is accomplished with lead. Therefore, this chapter will be devoted primarily to the use of lead, although steel, depleted uranium, concrete, and other materials can be used to advantage under various circumstances.

A number of available textbooks and reference documents discuss the subject of shielding in detail; consequently, the theory and calculational methods will not be presented here. In addition, a listing of shielding computer codes and topical reports can be obtained from the Radiation Shielding Information Center. Inquiries should be addressed to:

Radiation Shielding Information Center
Oak Ridge National Laboratory
P. O. Box X
Oak Ridge, Tennessee 37830, U.S.A.

The purpose of this chapter is to provide AEC personnel with a quick and reasonably accurate method of determining whether the shielding in a given cask will be adequate for a specified source. The nomographs presented here are modifications of those included in the first version of this guide (ORNL-TM-2410) and should be more useful than the earlier ones. However, they should be used only for checking purposes and should not be considered as a substitute for a formal shielding analysis.

7.2 DOT Regulations

Recently, changes have been made in permissible dose rates allowed at the surface of, or at specified distances from, a spent fuel shipping cask. The latest information concerning the shielding requirements of casks has been published by the Department of Transportation in the Federal Register[1] and is reproduced below.

"All radioactive materials, liquid, solid and gaseous must be packaged in suitable containers (shielded, if necessary) so that any time during the normal conditions incident to transportation the radiation dose rate does not exceed any of the limits specified in the following subparagraphs.

.....

1. 200 millirem per hour at any point on the external surface of the package.
2. 10 millirem per hour at three feet from any accessible external surface of the package.

"Packages for which the radiation dose rate exceeds the limits specified above but does not exceed at any time during transportation any of the limits specified in subparagraphs (1) through (4) below, may be transported in a vehicle (except aircraft) assigned for the sole use of that consignor, and unloaded by the consignee from the transport vehicle in which originally loaded.

1. 1000 millirem per hour at three feet from the external surface of the package (closed transport vehicle only);
2. 200 millirem per hour at any point on the external surface of the car or vehicle (closed transport venicle only);
3. 10 millirem per hour at six feet from the external surface of the car or vehicle; and
4. 2 millirem per hour or equivalent in any normally occupied position in the car or vehicle except this does not apply to private motor carriers."

7.3 Shielding Estimates

It is often quite useful to be able to determine quickly whether the shielding of a cask is adequate for a given service. For this purpose, we have included a nomograph[2] that permits an estimation of the shielding required to reduce the dose rate from spent fuel elements to any specified surface dose rate (see Fig. 7.1).

ORNL DWG 69-3495R2

W = TOTAL WT. IN CAVITY: POUNDS OF FUEL, CLADDING, COOLANT AND HARDWARE.
I = RADIATION LEVEL AT CASK, mr/hr.
Q = REACTOR MEGAWATTS FOR TOTAL FUEL IN CASK.

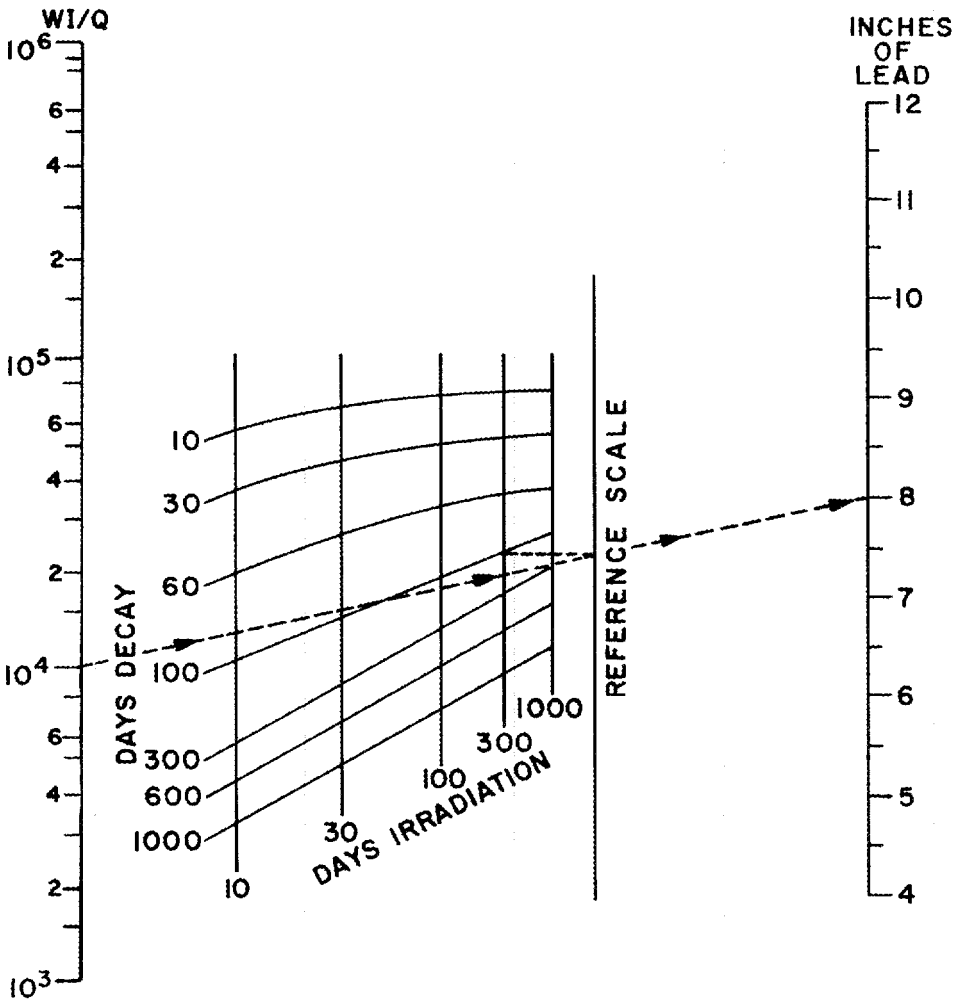

DIRECTIONS: FROM PROPER POINT IN IRRADIATION-DECAY GRID, PROJECT PERPENDICULARLY TO REFERENCE SCALE. THEN PROJECT FROM WI/Q SCALE THROUGH POINT ON REFERENCE SCALE

Fig. 7.1. Shielding for Casks and Vessels.

Figure 7.1 is based on the assumption that a large source has the same activity and mass per unit volume as the average for a cask cavity, and that the fuel is either fairly well distributed or approximately centered in the cavity. This model is suitable when the product wD exceeds about 200, where w is the average density of the cask contents (in pounds per cubic foot) and D is the minimum cross-sectional dimension of the cavity (in feet). For values of wD as small as 100, however, the conservatism of the method results in less than 1/2 in. of added lead thickness.

7.3.1 Comparison of Nomograph and Machine Code

Calculations made to determine the shielding thickness required to produce a dose rate of 100 mr/hr on the cask surface were determined using the QAD-P5A code[3] (which uses a kernel technique, with the buildup factor calculated by the moments method) and compared with those values obtained in Fig. 7.1 for the same surface dose rate.

The nomograph gives values of lead thicknesses generally within 5% of those calculated using the QAD-P5A code; the extremes are -7.6% and +5.4%.

7.4 Calculation of External Dose Rates — Open Vehicle

In most practical cases the shielding thickness will be set to limit the dose rate at 3 ft from the accessible cask surface (10 mr/hr) rather than to limit this surface dose rate (which should not exceed 200 mr/hr except as noted in Sect. 7.1). Therefore, Langhaar developed a nomograph (see Fig. 7.2) that relates the dose rate on the surface of the cask to a dose rate of 10 mrem/hr at 3 ft from the cask surface for casks of various sizes.[4]

Figure 7.2 is based on a cosine^2 distribution of flux leaving the cask surface; such a distribution appears to fit best the small amount of experimental evidence available.

ORNL DWG 69-3521 RI

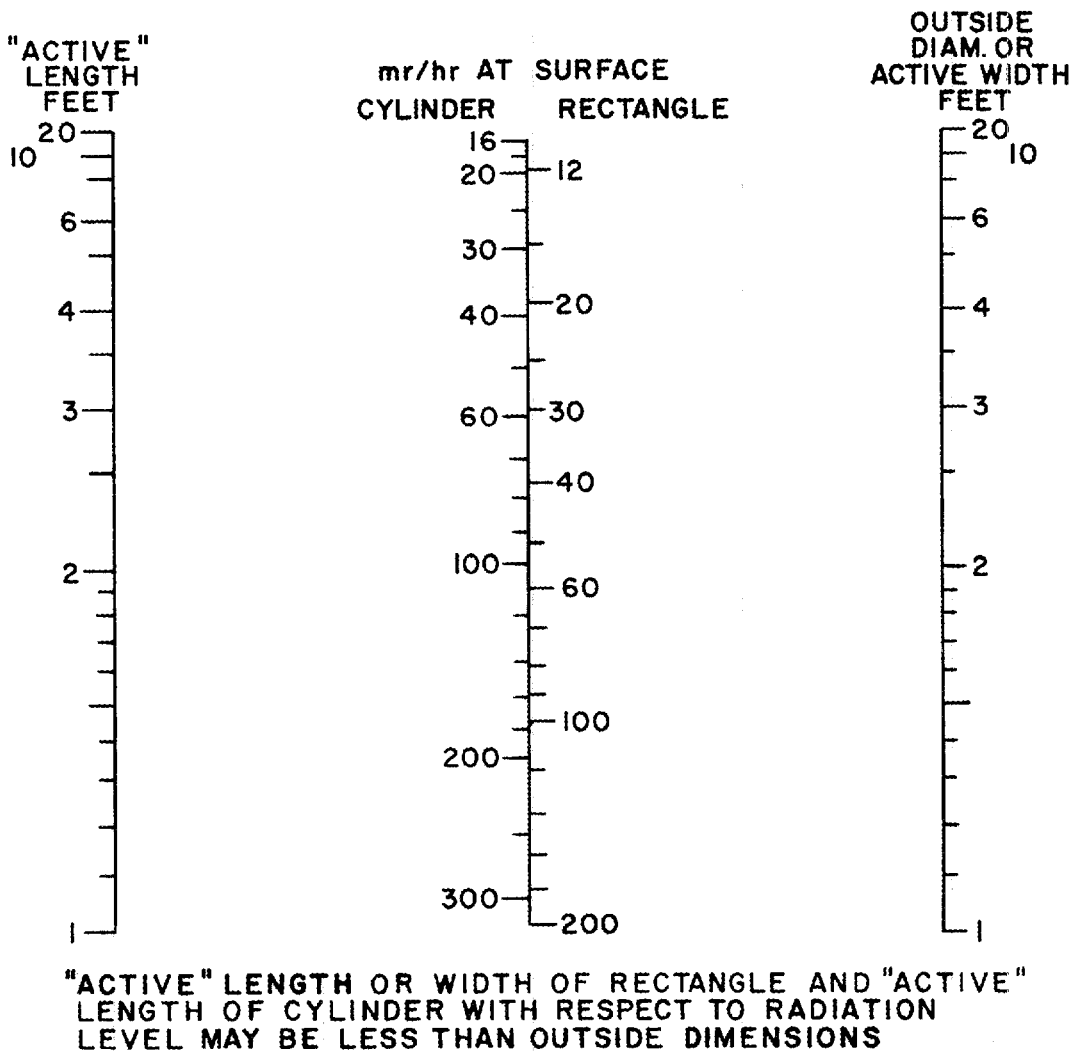

Fig. 7.2. Radiation Level at a Cylindrical or Rectangular Surface Corresponding to 10 mr/hr at 3 ft, Based on Cosine-Cubed Distribution of Photons or Cosine-Squared Distribution of Flux Leaving Surface. (ref. 4).

7.5 Effect of Using Steel for the Outer Shell on the External Dose Rate

Steel is generally used to encase the lead shielding of a cask. When the thickness of steel exceeds approximately 1 to 2 mean free paths, buildup factors for steel, rather than lead, should be used in making dose rate calculations.

Since steel buildup factors are greater than the ones for lead, the designer cannot simply calculate the lead shielding required, reduce it by a given amount, and then replace that amount of lead with an equal mass of steel. To overcome this problem, Fig. 7.3 was prepared. This figure indicates the thickness of a lead-steel combination that will be equivalent to a given lead shield thickness, taking into account appropriate buildup factors.

The parametric curves indicate the lead thickness that will be required for shielding as given by Fig. 7.1; this then defines the combination of lead-steel thicknesses of equivalent shielding which may be read from the ordinate and abscissa.

7.6 Calculation of External Dose Rates — Closed Vehicle

When casks are transported in a closed vehicle, surface and other dose rates may exceed the values prescribed for casks under normal handling conditions (see Sect. 7.2). Under such conditions, dose rates other than those on the surface or at 3 ft from the surface may be limiting. Figures 7.4 - 7.6 provide the ratio of the dose rate at some point P to that on the surface. Once the dimensions of the cask and vehicle have been specified, these curves plus the information in Sect. 7.2 can be used to determine the limiting dose rate and the point at which it will occur. If the limiting dose rate occurs at a location other than 3 ft from the cask surface, Figs. 7.4 - 7.6 can be used to determine what the surface dose rate should be; Fig. 7.1 can then be used to determine the necessary lead shielding.

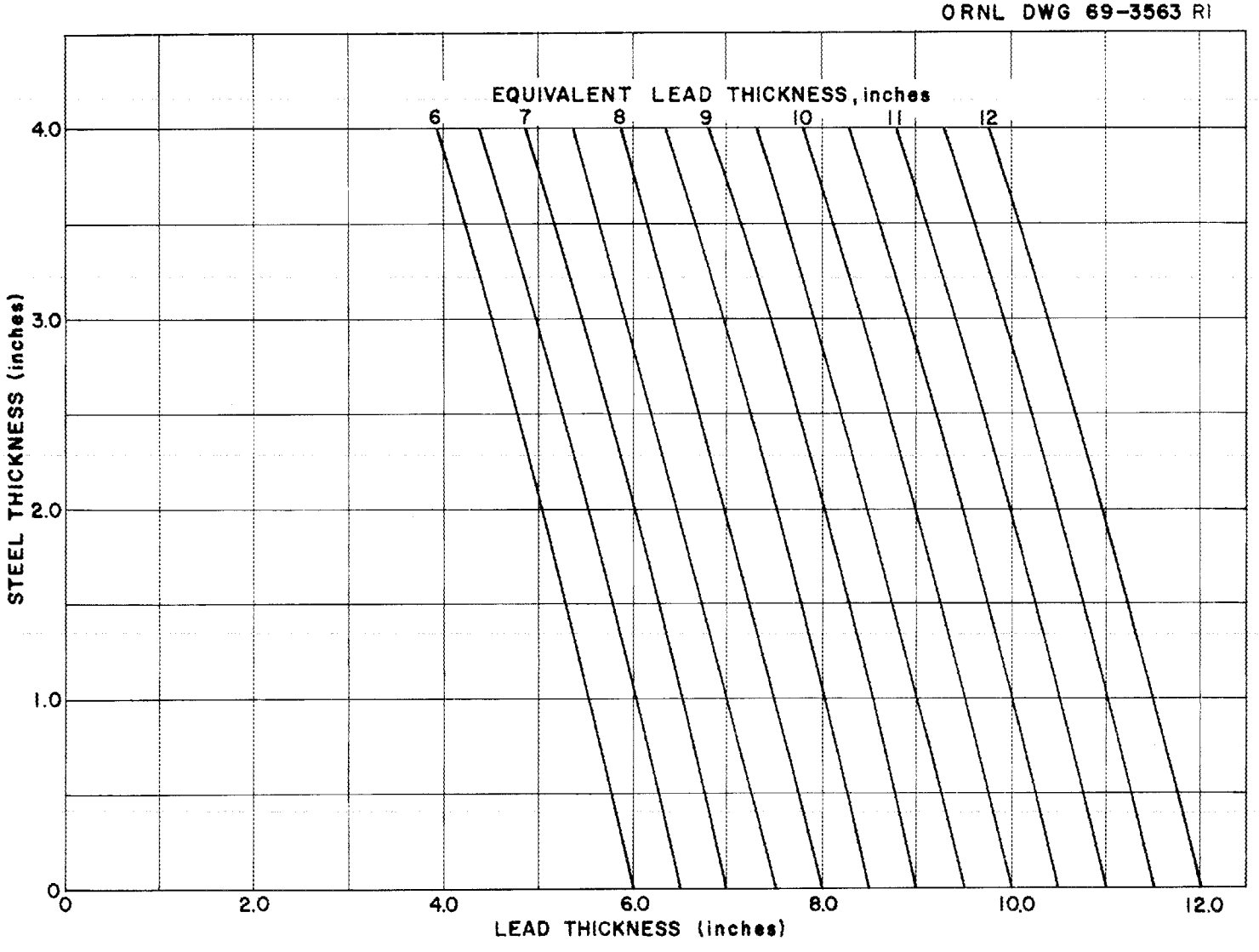

Fig. 7.3. Actual Steel and Lead Shielding Thicknesses as a Function of Equivalent Lead Thickness.

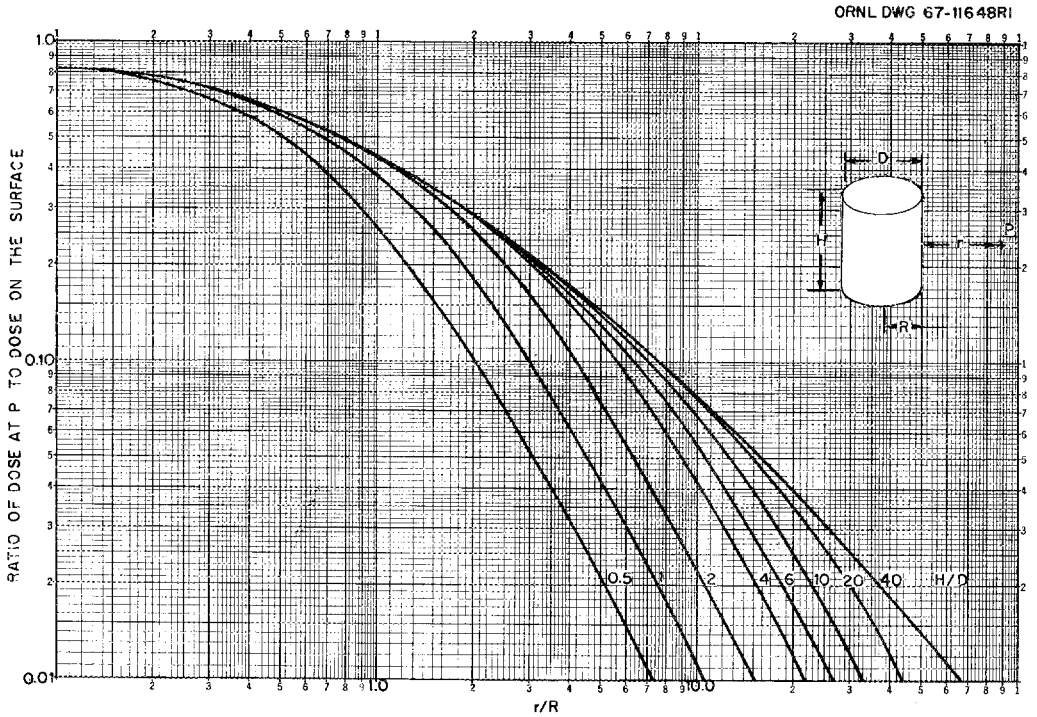

Fig. 7.4. Ratio of Dose at P to Dose on the Surface Based on Cosine^2 Flux Distribution on Surface.

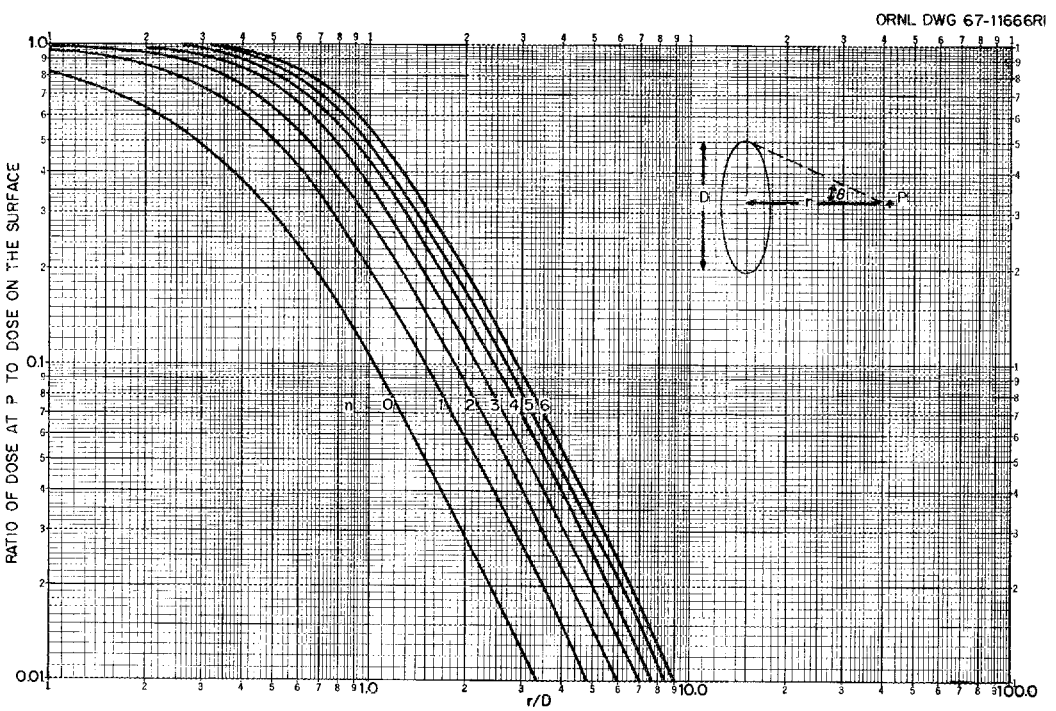

Fig. 7.5. Ratio of Dose at P to Dose on the Surface Based on Cosine^n Flux Distribution on Surface.

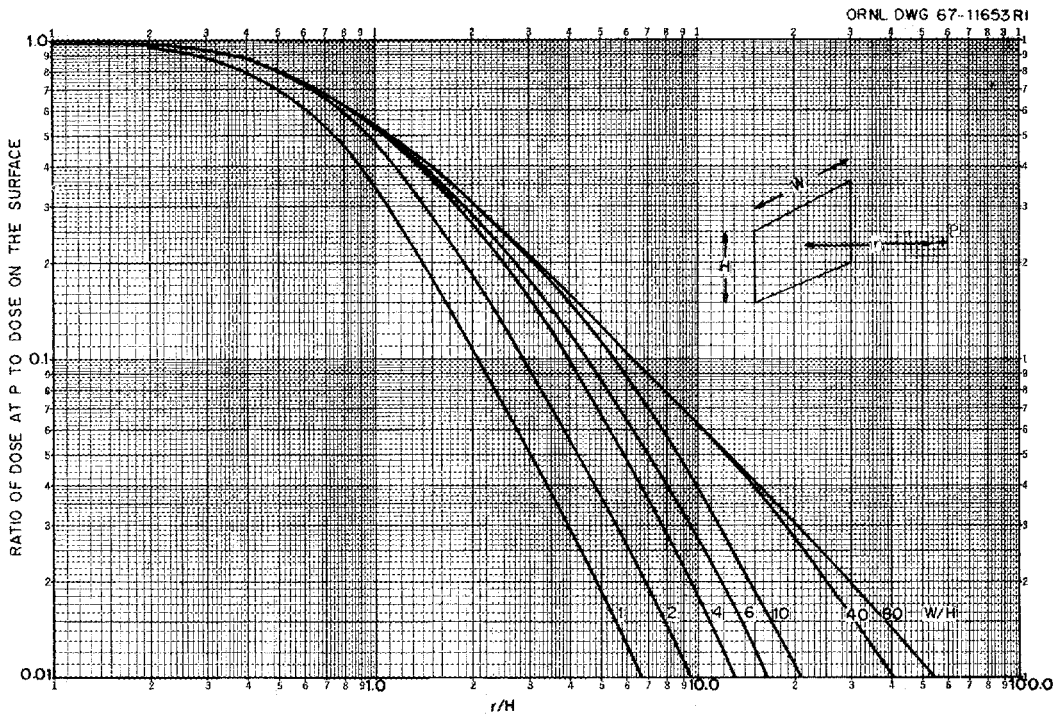

Fig. 7.6. Ratio of Dose at P to Dose on the Surface Based on Cosine^2 Flux Distribution on Surface.

7.7 Example

Assume that a cylindrical shipping cask, 10 ft long and 2 ft in diameter, which weighs 45,000 lb is used to transport one experimental fuel element from a reactor to an examination facility. The fuel element, irradiated 300 days, has a total-shipping-weight-to-thermal-output ratio (W/Q) of 200. The cask shielding consists of 7 in. of lead, plus stainless steel outer and inner shells that are 1/4 in. and 1 in. thick, respectively. Does this cask have sufficient shielding to permit the fuel element to be shipped after a 100-day cooling period without exceeding an external dose rate of 10 mr/hr at 3 ft from the cask surface?

Answer: From Fig. 7.2, a 2-ft-diam cylinder with an active length of 8 ft would have a surface dose rate of 50 mr/hr if the dose rate were limited to 10 mr/hr at a distance 3 ft from the surface.

The equivalent lead shield required to produce a surface dose rate of 50 mr/hr can be obtained from Fig. 7.1. For this case, $\frac{WI}{Q} = (200)$

(50) = 10^4; then, for a reactor operating time of 300 days and a cooling time of 100 days, 8 in. of lead equivalent would be required.

From Fig. 7.3, a cask whose outer stainless steel shell is 1 in. thick would require 7-1/2 in. of lead to develop a total of 8 in. of lead shielding equivalent. Since the cask in question has only 7 in. of lead plus a 1/4-in.-thick inner steel shell, its shielding would probably not be adequate.

The above procedure can be reversed to determine the decay period that would be required prior to shipment of the element, while maintaining the 50-mr/hr limit at the cask surface. For the case cited, approximately 200 days decay would be required.

7.8 References

1. Code of Federal Regulations, Title 49, Part 173-178, Federal Register 33, (No. 194) Part II (Oct. 4, 1968).

2. L. L. Zahn, et al., "Transportation of Radioactive Materials," Reactor Technology, Selected Reviews, 1965, TID-8541.

3. R. E. Malenfant, QAD; A Series of Point Kernel General Purpose Shielding Programs, LA-3573 (Apr. 5, 1967).

4. J. W. Langhaar, E. I. DuPont, Wilmington, Delaware, personal communication.

8. URANIUM-SHIELDED CASKS

8.1 General Considerations

Uranium metal is of interest as a shielding material for shipping casks because of its high density, radiation absorption efficiency, thermal conductivity, high melting point, high strength, and availability. A brief summary of the more important properties of uranium metal which are pertinent to its use for radiation shielding follows:

Because of its high density (~ 19 g/cc), a cylindrical uranium shield will usually weigh less than 75% of a lead shield and less than 50% of a steel shield having the same internal cavity dimensions and comparable radiation attenuation capabilities. The actual ratio of the weights of the casks using different shielding materials depends upon the cavity length and diameter and shielding requirements.

Uranium has a high thermal conductivity (approximately equal to that of solid lead) and specific heat; it has a melting point of 2071°F which can be an important safety consideration.

Although uranium oxidizes upon exposure to air to form a non-protective oxide film, canning in an inert atmosphere prevents contact between uranium and air and effectively eliminates any oxidation problem.

As a neutron reflector, uranium is as effective as water. Calculations indicate that replacing an infinite water reflector with a small water gap backed by uranium would cause an almost insignificant change in k_{eff}.

Under certain conditions uranium can form a low-melting eutectic alloy if it is placed in contact with steel although the problem can be easily overcome. It also is subject to a permanent thermal cycling growth if the grain structure is not randomly orientated.

Although many of the structural properties of uranium are approximately the same as mild steel, the differences in chemical properties between the two materials require the use of special procedures and techniques. Uranium produced in vacuum induction furnaces can be cast into

various shaped molds. In addition, uranium billets can be rolled, formed, machined, and welded with the same type of ship equipment that is used to fabricate mild steel.

Since uranium has a significant weight and volume advantage as compared with lead, a significant savings in shipping costs could be realized by using uranium casks. This advantage must be weighed against the higher cost of materials and fabrication before an attempt can be made to determine economic feasibility. This problem was discussed by Shappert and Salmon in Ref. 1.

Several years ago, consideration of the advantageous safety features of uranium casks were expected to have resulted in the development of several uranium-shielded radioisotope shipping casks[2] and a demonstration fuel element shipping cask program.[3-6] Results of these efforts have demonstrated the feasibility of uranium-shielded shipping casks. Currently, several industrial fabricators have the capability to produce uranium-shielded casks.

8.2 Properties of Uranium

Some of the more important physical and chemical properties of uranium are listed in Table 2.6.

8.3 Technological Factors

In the past, the use of uranium, either as a material of construction or as a radiation shield, has been limited by a history of unsatisfactory performance resulting from a general lack of understanding of the specific properties of uranium. The high cost of starting material (UF_6) for the private sector of the shipping industry has also had a significant deleterious effect on its use. Some of the recently developed uranium technology is summarized in the following paragraphs.

8.3.1 Thermal Expansion

The basic uranium crystal has different coefficients of thermal expansion along its different axes; the coefficient in one direction is negative. Since these crystals become oriented in various directions during forming operations (e.g., rolling billets into plate), the coefficient

of thermal expansion of a fabricated item will not only be unpredictable but will vary when measured in different directions. This condition can be eliminated by a heat treatment in which the worked metal is heated into the beta range (i.e., about 1250°F), and either quenched or allowed to furnace cool. This treatment randomizes the grain structure and results in a metal having equal, predictable, and moderate coefficients of expansion in all directions. Uranium castings will normally have random grain orientation and, therefore, are comparable in thermal expansion behavior to uranium heat treated in the beta range.

Table 8.1 presents a comparison of the thermal expansion coefficient of uranium and some other metals normally used in fabrication work.

8.3.2 Thermal Cycling Growth

Thermal cycling growth, a characteristic exhibited by uranium metal having preferred grain orientation, causes the metal to permanently change dimensions when thermally cycled to 650°F or higher. Since this growth is related to preferred grain orientation, it follows that cast or beta-heat-treated uranium is not subject to thermal cycling growth; this has been confirmed by extensive testing.

Table 8.1. Thermal Expansion Coefficients for Various Materials

Material	Thermal Expansion Coefficient (10^{-6}/°F)
Aluminum	13.3
Copper	10.0
Stainless steel (300 class)	10.0
Stainless steel (400 class)	6.1
Steel	6.7
Monel	7.8
Uranium (random grained)	8.0

8.3.3 Formation of Uranium-Iron Alloy in a Fire

Uranium in contact with stainless steel can form a low-melting alloy (mp, 1337°F) if heated above that temperature. The recent demonstration cask testing program verified the effectiveness of using a tungsten diffusion barrier placed between the uranium shield and the stainless steel cladding to prevent alloy formation. Tests have also indicated that 0.005 in. of copper will provide adequate diffusion barrier protection at fire test conditions (1475°F); however, much better protection is provided by 0.005 in. of plasma sprayed tungsten. In a laboratory test, this treatment was completely effective at 1900°F for 2.5 hr. The plasma sprayed diffusion barrier was applied to the stainless steel rather than the uranium shield.

8.3.4 Chemical Activity

Because of its chemical and physical properties, uranium shields should be clad with some material such as stainless steel. The proper design of cladding welds, along with adequate inspection and test procedures, is necessary to prevent cladding failure since it is important that the cladding be absolutely free of any breaks or pinholes if satisfactory service is to be obtained. Reactions which the steel cladding can prevent (assuming the steel clad weldment has been backfilled with inert gas) are those between uranium and oxygen to form uranium oxide and between uranium and moisture, or water, to form either the oxide or hydride. The oxide is generally loose and fluffy and quickly fills any void space within the cladding of a shipping cask. This condition tends to halt the oxidation since further contact with the contaminating agent is prevented by the presence of the reaction products. Such is not the case in the formation of uranium hydride.

When uranium reacts with water, hydrogen is evolved. This hydrogen can migrate through extremely small passages to sites which may favor its reaction with uranium to form uranium hydride. The production of uranium hydride is not self limiting since it can decompose at certain (relatively moderate) temperatures, leaving a spongy residue free of hydrogen. The

liberated hydrogen can migrate to other favorable locations to form more uranium hydride and repeat the cycle.

The uranium hydride produced in this process has a low density and, therefore, swells upon formation; this swelling can cause cladding deformation or rupture. Such reactions are possible at temperatures normally encountered in cask service provided moisture is present to initiate the process.

It is important to reiterate that the presence of a sound cladding material around the uranium can completely eliminate the problem of significant chemical activity which might render the cask temporarily inoperative.

8.3.5 Uranium Alloys

Some alloys of uranium may offer specific desirable improvements in physical or chemical properties of the metal. Such improvements, and the advantage they might offer to the cask designer would have to be considered on a case by case basis.

The most common alloying material is molybdenum. The resulting alloy is more expensive than uranium metal, depending on the amount used, and also less dense. However, the alloy has higher strength and improved oxidation resistance.

8.4 Design Considerations

The impact of a uranium structure results in high shock loads with small deformations due to the high (~ 20 x 10^6 psi) modulus of elasticity of the material. While a large amount of impact energy can be absorbed by a uranium structure, the accompanying high shock loads imparted to the cask contents may be undesirable. Also, loading that will result in tensile stress in uranium must be minimized since uranium has low elongation to failure values in tension. In order to guarantee low tensile loadings and accelerations, some form of impact cushioning is usually provided. It is relatively easy to include steel sacrificial members on the cask to provide the necessary cushioning. (ref. Chap. 2) The design of the

demonstration fuel element shipping cask utilizing sacrificial steel fins, is shown in Fig. 8.1. A detailed discussion of the design of this cask is given in ref. 4.

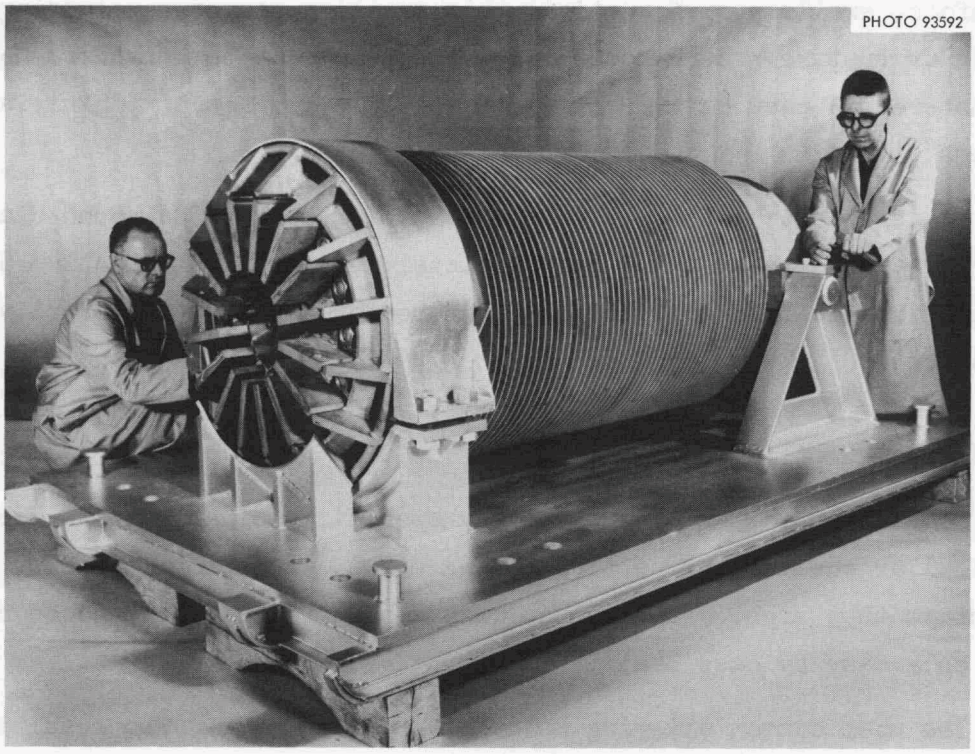

Fig. 8.1. The Demonstration Fuel Element Shipping Cask. (Courtesy of Union Carbide Corp., Paducah Plant)

8.5 Fabrication

Presently the weight of a single casting, produced in a vacuum induction furnace, is limited to around 10,000 lb. It may be possible to produce larger single pour castings in the future but now there is no economic incentive for doing so. This has produced two fabrication concepts for casks whose uranium shielding requirements exceed such a limit. The uranium melt may be cast in molds to specific shapes or it may be cast in billets and rolled to form plate.

If castings are used, they must be stacked as required by the design and the pieces joined in an appropriate manner to form a rather rigid structure. If the plate approach is considered, they must be formed to the appropriate size, nested, and welded also to form a rigid structure.

There are advantages and disadvantages to both methods but it will suffice here to say that they both can be made to work. It should be noted, however, that private industrial concerns are equipped to produce castings rather than plate. With sound castings joined to form a monolithic type structure, then the behavior of the cask should be quite similar to the one produced in the Commission facilities utilizing the plate technique and tested so extensively. The intent of the tests were, of course, aimed primarily at testing the ruggedness and durability of a strong uranium structure rather than the techniques used to produce that structure.

8.5.1 Uranium Welding

Welding of uranium can be an important factor in the production of uranium casks. Welds must be free of voids and/or oxide inclusions in order to exhibit the same radiation attenuation as the base metal. Welding procedures have been developed which; 1) have sufficient strength and ductility to give the finished cask the required structural strength; 2) are not so difficult or tedious that welding costs are a major fabrication cost factor; and 3) do not present an undue health hazard to the welders.[7]

The property of uranium which makes it difficult to obtain sound welds is its chemical reactivity at welding temperature, specifically its high affinity for atmospheric oxygen. An absolute absence of air in contact with hot uranium is necessary if sound welds are to be obtained. The uranium welding method used to produce the uranium-shielded casks discussed in ref. 5 was tungsten inert gas and is generally referred to as TIG welding.

Another method which has been used was a modified TIG procedure using silver plated uranium filler rods. Silver is completely insoluble in molten uranium and forms an impervious film on the molten surface. The silver coating on the filler rod prevents oxide formation on the rod until it is melted during welding. The silver from the rod then floats on the surface of the molten uranium and prevents the formation of insoluble material which would remain in the weld and impair its quality; it also eliminates

the need for chemical or major physical treatment of the weld between passes. Elimination of cleaning between passes increases the overall welding speed by a factor of 5 to 10. Welds produced by this procedure are normally free of voids and/or inclusions. Subsequent beta annealing of the weld area will produce the same chemical, physical and mechanical properties comparable to those of cast or beta-heat-treated uranium.[7]

8.6 Testing of a Prototype Uranium-Shielded Cask

Recently the Commission initiated a program (mentioned previously in Sect. 8.1) with a view to determining the technical feasibility of using rather large uranium shields in radioactive materials shipping service. A demonstration cask design was developed which would indicate the behavior of massive uranium shields under normal and accident conditions (see Fig. 8.1). This cask[4-6] successfully met the applicable AEC Chapter 0529, 10 CFR 71, and IAEA Safety Series 6 normal transit design criteria, and passed the hypothetical accident series for shipping radioactive materials. The significant results of the destructive testing program are summarized in the following paragraphs.

The maximum cask deceleration rates measured for the 30-ft closure edge impact test of the full size were 445 g's and 281 g's on the bottom of the lid and on the bottom of the cask, respectively. Inspection of the cask following the test showed that the impact damage was isolated to approximately one-half of the closure end impact fins and to a small section of the steel flange to which the fins were welded.

Figure 8.2 is a photograph of the cask closure and damage. The maximum change in cavity diameter, -0.053 in., was located near the top of the cavity.

The maximum acceleration rate measured in the 40-in. free fall puncture test was 78 g. No serious damage was incurred in this test; the maximum permanent change in cask cavity diameter was located near the point of impact.

There was no leakage of liquid to the outside of the cask during the impact tests. No dimensional changes were experienced that would have

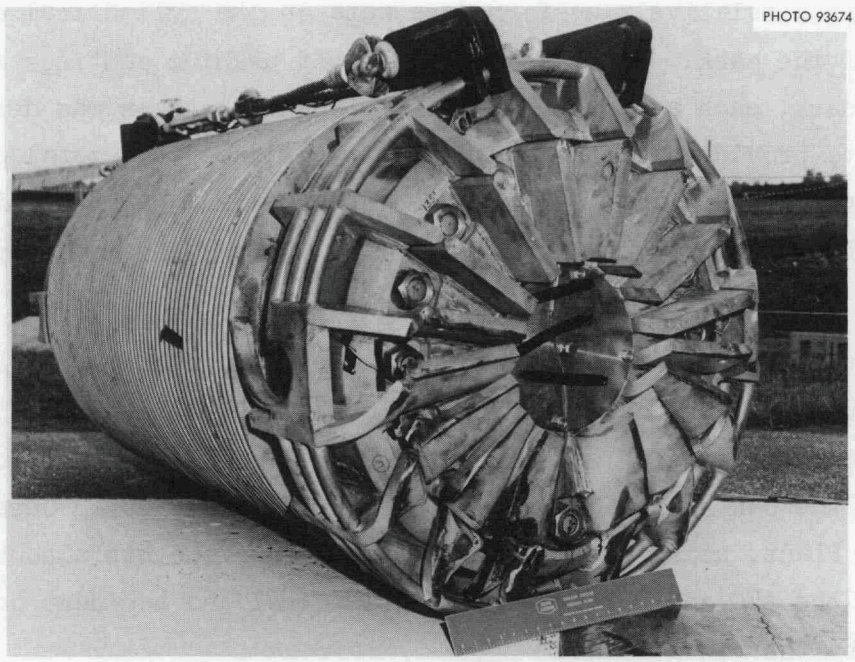

Fig. 8.2 Damage Resulting From a 30-ft Free Fall to the Demonstration Cask. (Courtesy of Union Carbide Corp., Paducah Plant)

prevented the cask from being used safely for shipping spent fuel elements. The cask was also exposed to a 45-min petroleum fire. An analysis of the fire test data showed that the cask was within a 1475°F environment for over 30 consecutive minutes during the test.

Tests made after the thermal exposure showed that there was no loosening of lid studs during the fire and no cladding failure. The maximum permanent change in the cask cavity diameter was + 0.116 in. The fire damage to the fluoroelastomer ring gasket was of a minor nature and the gasket was reusable; a nickel-plated stainless steel gasket was also undamaged by the fire.

8.7 Examples of Uranium Shielded Casks

Drawings of casks which utilize uranium as a shielding material and which are used to transport radioactive materials are shown in Figs. 8.3 and 8.4. The cask shown in Fig. 8.3 weighs 44,000 lb and was built by the National Lead Company to accommodate both NRU and NRX fuel while

maintaining a relatively uniform dose rate on the cylindrical external surface of the cask. Four separate depleted uranium castings were made for this cask, each approximately 11 ft long. The cask was designed in this way to provide a 12 in. square cavity yet keep the total cask plus tractor-trailer weight below 73,280 lb, the maximum weight limit for most states. The cask has been approved by the AEC and DOT and is presently in use.

Figure 8.4 shows a cask whose shielding thickness is 6-3/4 in. of depleted uranium; the cask weighs 11,450 lb and is designed to accommodate 400,000 curies of ^{60}Co which produce 6 kw of heat. This container, built for the Oak Ridge National Laboratory by the Paducah Gaseous Diffusion Plant, using the laminated plate technique has also been approved by the AEC and DOT as meeting all normal and accident conditions required by the regulations.

ORNL DWG 69-10366

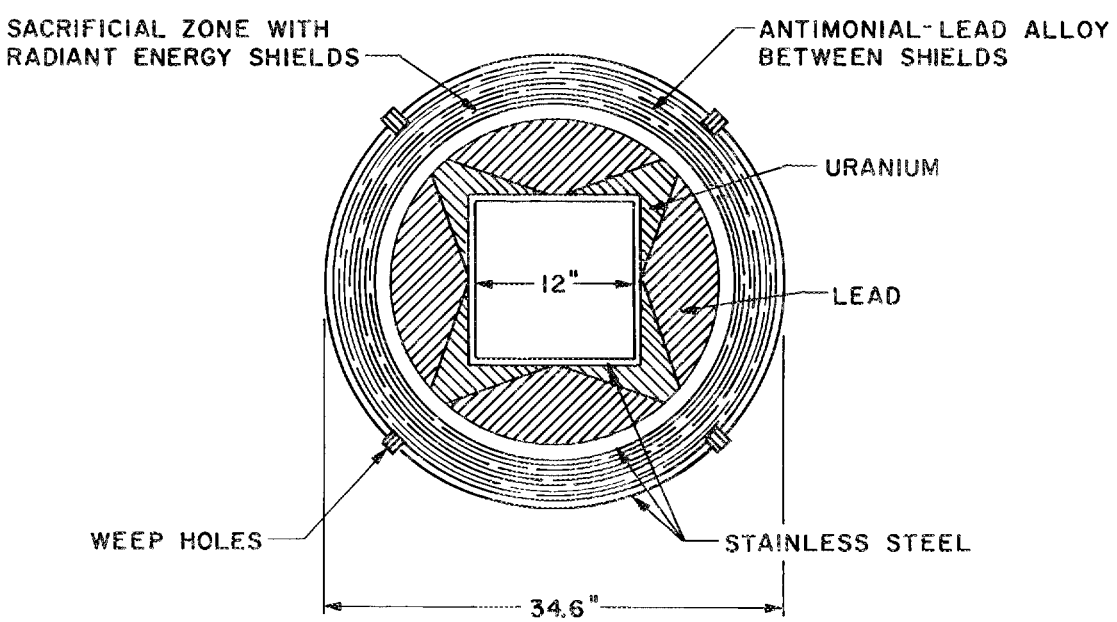

Fig. 8.3. Section View of the NRU-NRX Irradiated Fuel Shipping Cask. (Courtesy of National Lead Company)

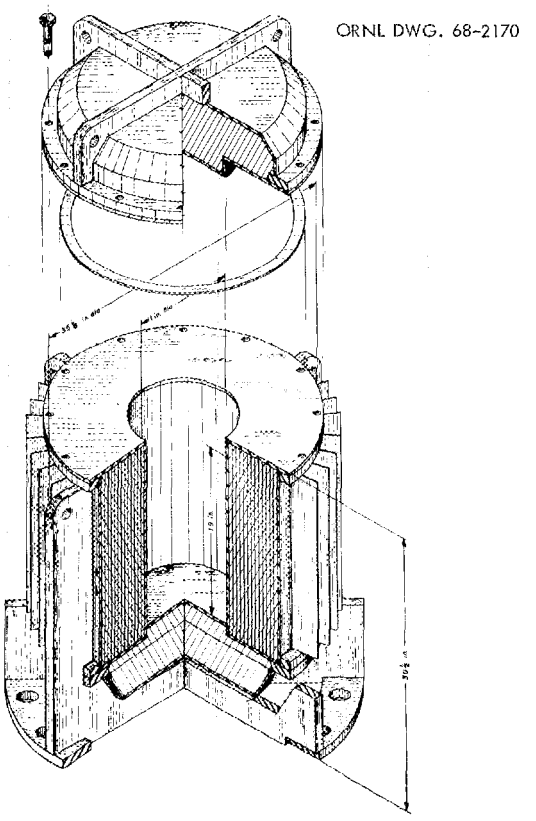

Fig. 8.4. Uranium Shielded ^{60}Co Cask.

8.8 References

1. L. B. Shappert and R. Salmon, Shipping Cost Comparisons for Lead, Steel, and Uranium Shielded Casks, ORNL-3918 (March 1966).

2. C. B. Clifford, Design and Fabrication of a Prototype Laminated Uranium Metal Shipping Cask for Large Shipments of Cobalt-60, KY-521 (April 3, 1967).

3. C. B. Clifford, The Design, Fabrication, and Testing of a Quarter Scale Model of the Demonstration Uranium Fuel Element Shipping Cask, KY-546 (June 10, 1968).

4. C. W. Loveland, D. H. Stitt, and S. Bernstein, Demonstration Fuel Element Shipping Cask from Laminated Uranium Metal - Part I - General Information, Background, and Design, KY-550 (April 15, 1969).

5. V. A. Smith and C. W. Loveland, Demonstration Fuel Element Shipping Cask from Laminated Uranium Metal - Part II - Fabrication and Costs, KY-551 (March 20, 1969).

6. C. B. Clifford, Demonstration Fuel Element Shipping Cask from Laminated Uranium Metal - Part III - Tests and Demonstrations, KY-552 (March 12, 1969).

7. W. R. Rossmassler (ed.), Paducah Plant Laboratory Progress Report, KY-L-469 (Dec. 1968).