OAK RIDGE NATIONAL LABORATORY LIBRARIES
3 4456 0549328 5

CENTRAL RESEARCH LIBRARY
DOCUMENT COLLECTION

...ONAL LABORATORY
operated by
UNION CARBIDE CORPORATION
for the
U. S. ATOMIC ENERGY COMMISSION

ORNL-TM-1355

EQUILIBRIUM SOLID SOLUTIONS OF NITROGEN IN Cb–1% Zr BETWEEN 1200–1800°C

H. Inouye

CENTRAL RESEARCH LIBRARY
DOCUMENT COLLECTION
LIBRARY LOAN COPY
DO NOT TRANSFER TO ANOTHER PERSON
If you wish someone else to see this document, send in name with document and the library will arrange a loan.

NOTICE This document contains information of a preliminary nature and was prepared primarily for internal use at the Oak Ridge National Laboratory. It is subject to revision or correction and therefore does not represent a final report.

LEGAL NOTICE

This report was prepared as an account of Government sponsored work. Neither the United States, nor the Commission, nor any person acting on behalf of the Commission:

A. Makes any warranty or representation, expressed or implied, with respect to the accuracy, completeness, or usefulness of the information contained in this report, or that the use of any information, apparatus, method, or process disclosed in this report may not infringe privately owned rights; or

B. Assumes any liabilities with respect to the use of, or for damages resulting from the use of any information, apparatus, method, or process disclosed in this report.

As used in the above, "person acting on behalf of the Commission" includes any employee or contractor of the Commission, or employee of such contractor, to the extent that such employee or contractor of the Commission, or employee of such contractor prepares, disseminates, or provides access to, any information pursuant to his employment or contract with the Commission, or his employment with such contractor.

ORNL-TM-1355

Contract No. W-7405-eng-26

METALS AND CERAMICS DIVISION

EQUILIBRIUM SOLID SOLUTIONS OF NITROGEN IN Cb–1% Zr BETWEEN 1200–1800°C

H. Inouye

Paper presented at the Fourth AIME Symposium on Refractory Metals, French Lick, Indiana, October 3–5, 1965

FEBRUARY 1966

OAK RIDGE NATIONAL LABORATORY
Oak Ridge, Tennessee
operated by
UNION CARBIDE CORPORATION
for the
U. S. ATOMIC ENERGY COMMISSION

OAK RIDGE NATIONAL LABORATORY LIBRARIES

3 4456 0549328 5

EQUILIBRIUM SOLID SOLUTIONS OF NITROGEN IN Cb–1% Zr BETWEEN 1200–1800°C*

H. Inouye
Metals and Ceramics Division
Oak Ridge National Laboratory
Oak Ridge, Tennessee

ABSTRACT

An ultrahigh vacuum technique capable of measuring sorption rates as low as 4×10^{-3} ppm N/hr and pressures of 10^{-10} torr of nitrogen was used to measure the thermodynamic properties of solutions of nitrogen in Cb–1% Zr between 1200 and 1800°C.

In the composition range 31 to 278 ppm N, the solutions obeyed Sievert's law. An anomalous solution behavior that was dependent on the amount of nitrogen in solution occurred between 1200 and 1400°C and was attributed to an oxygen-nitrogen interaction. The partial molar free energy expression for the equilibrium $\frac{1}{2}N_2 = \underline{N}$ in the temperature range 1400 to 1800°C was $\Delta\overline{F}^o = -51{,}500 + 20.74T$, and $\Delta\overline{F}^o = -34{,}200 + 9.52T$ for the temperature range 1200 to 1400°C.

INTRODUCTION

One of the major problems encountered in determining the properties of refractory metals arises from the fact that the interstitials oxygen, carbon, nitrogen, and hydrogen can be in solution or precipitated as a

*Research sponsored by the U. S. Atomic Energy Commission under contract with the Union Carbide Corporation.

compound. Furthermore refractory metals can be contaminated with or purified of the above interstitials when heat-treated in vacuum.

This tendency for the interstitial concentration to change during heat-treatment coupled with the possibility that they may or may not be in solution complicates the problem of property measurement. Clearly data on the solubility and the thermal stability of the interstitials in refractory metals are required.

The principle objective of this study was to overcome a part of this problem by establishing the conditions of thermal stability and the phase relationships in the system N_2/Cb–1% Zr between 1200 and 1800°C. Fulfillment of this objective required the development of a technique for accurately measuring very small concentrations of nitrogen in the alloy and for the measurement of the equilibrium nitrogen pressure.

EXPERIMENTAL

A new technique was used to determine the N_2/Cb–1% Zr equilibria. This method depends upon measuring the rate of nitrogen flowing into and out of a reaction vessel under a pressure gradient by means of Eq. (1)

$$Q = F_1(P_1 - P_2) - F_2(P_2 - P_3) \qquad (1)$$

where

Q = sorption or desorption rate (torr·cm^3/sec)*,

P_1, P_2, P_3 = nitrogen pressures (torr) in the manifold, over the sample, in the exhaust, respectively,

F_1 and F_2 = conductances of leak valves (cm^3/sec).

---

*$Q \times 1.205 \times 10^{-3}$ = cm^3/sec at STP.

The quantity $F_1(P_1 - P_2)$ is the flow rate of nitrogen into the reaction vessel containing a heated sample and $F_2(P_2 - P_3)$ is the flow rate of gas out. When Q is positive, the sample is sorbing gas at this rate since the net flow of gas into the reaction vessel exceeds the rate of exhaust. When Q is negative, the sample is degassing and when Q = 0 the state of equilibrium exists.

The various conditions of sorption, degassing, and equilibrium were regulated as desired by adjusting the manifold pressure P_1 while the conductances were fixed by the settings on the high-vacuum leak valves. The change in the nitrogen concentration, ΔX, (in ppm) was computed by integrating the reaction rate Q over the reaction time. A low background pressure of interfering gases was maintained by continuous pumping to about 1×10^{-9} torr. The arrangement of the apparatus is shown schematically in Fig. 1. Except for the mass-spectrometer, flanges, valves, and the electrodes, the apparatus was constructed of Pyrex.

The conductances, F_1 and F_2, were calculated from the exhaust rates of argon from the reaction vessel (1), and the ion-gages G_1, G_2, and G_3 were calibrated against each other with the mass-spectrometer. The nitrogen pressure over the sample (P_2) was calculated from the spectra of the peaks occurring between mass-to-change ratios (M/e) of 44 and 2. Peaks for N_2 and CO occur at M/e = 28 and the separation of the gases was accomplished from the ionization and cracking patterns of CO, CO_2, CH_4, and N_2. The measured nitrogen pressure, P_2, was corrected for thermal transpiration in accordance to the method of Moore (2).

---

[1]Dushman, S., Scientific Foundations of Vacuum Technique, p. 121, John Wiley and Sons, Inc., New York, 1949.

[2]Moore, B. C., J. Vac. Sci. Tech., 1(1), 10 (1964).

ORNL-DWG 64-9322R

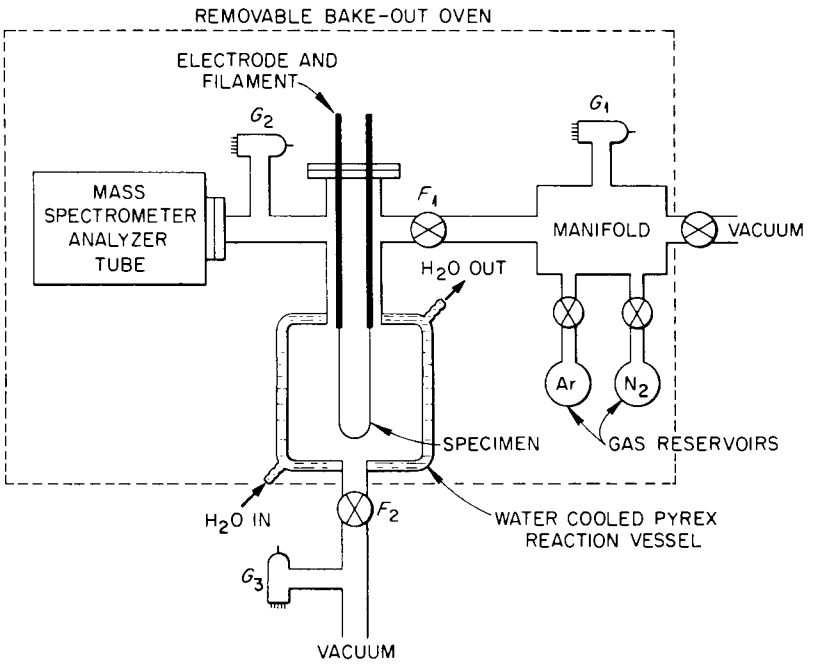

Fig. 1. Schematic Diagram of Apparatus for Measuring Sorption Rates in Ultrahigh Vacuum. G_1, G_2, and G_3 are ion gages for measurement of vacuum, and F_1 and F_2 are leak valves.

The alloy sample was a ribbon 0.010 × 0.094 × 6.875 in. cut from a cold-rolled section of an electron-beam melted ingot that analyzed 1.04% Zr, 120 ppm O, 67 ppm N, 80 ppm C, and 13 ppm H. The filament was formed into a "U" and the ends were spot welded to molybdenum connectors, 3/4 in. long × 0.007 × 0.085 in., to reduce the temperature gradient in the filament to about 10°C, then to 1/8-in.-diam molybdenum electrodes. Temperatures were measured optically through a magnetically shuttered port. An emissivity of 0.345 was used (3) and a correction was applied to this temperature due to the absorbing characteristics of the

[3]Cost, J., and Wert, C. A., T.&A.M. Report No. 205, University of Illinois (Dec. 1961).

Pyrex sight port using a measured absorbing constant of $3.5 \times 10^{-6}/°C$ (Ref. 4).

After bakeout at 250°C of that part of the apparatus enclosed by the dashed boundaries in Fig. 1, the filament was degassed at 1650°C until the total pressure in the reaction vessel was about 6×10^{-9} torr. Utilizing Eq. (1) the equilibrium nitrogen pressure was then determined at a series of temperatures both on heating and cooling. Subsequent to these measurements, an increment of nitrogen was added to the filament, homogenized under equilibrium conditions at 1650°C, and the equilibrium nitrogen pressures were measured again at a series of temperatures. Equilibrium was assumed when $Q \sim 0$ ($\Delta X \sim 1$ ppm in 300 hr) and P_2 was constant. After several nitrogen additions, the total nitrogen content of the filament was determined by chemical analyses and compared with the calculated value based on the amount of nitrogen added.

RESULTS

The precision with which the amount of nitrogen could be added to the filament is shown by four typical sorption rate curves in Fig. 2. These data show that nitrogen sorption rates varying from 10^{-3} to 2 ppm/hr could be obtained for the pressure range 2×10^{-10} to 1×10^{-7} torr. The calculated nitrogen content of the filament compared to that determined by chemical analysis shown in Table 1 agree within 4 ppm at approximately 30 ppm and within 0.5 ppm at 100 ppm. Analysis also showed that the

---

[4]Kostkowski, H. J. and Lee, R. D., Nat. Bur. Std. (U.S.) Monograph, 41, (March 1962).

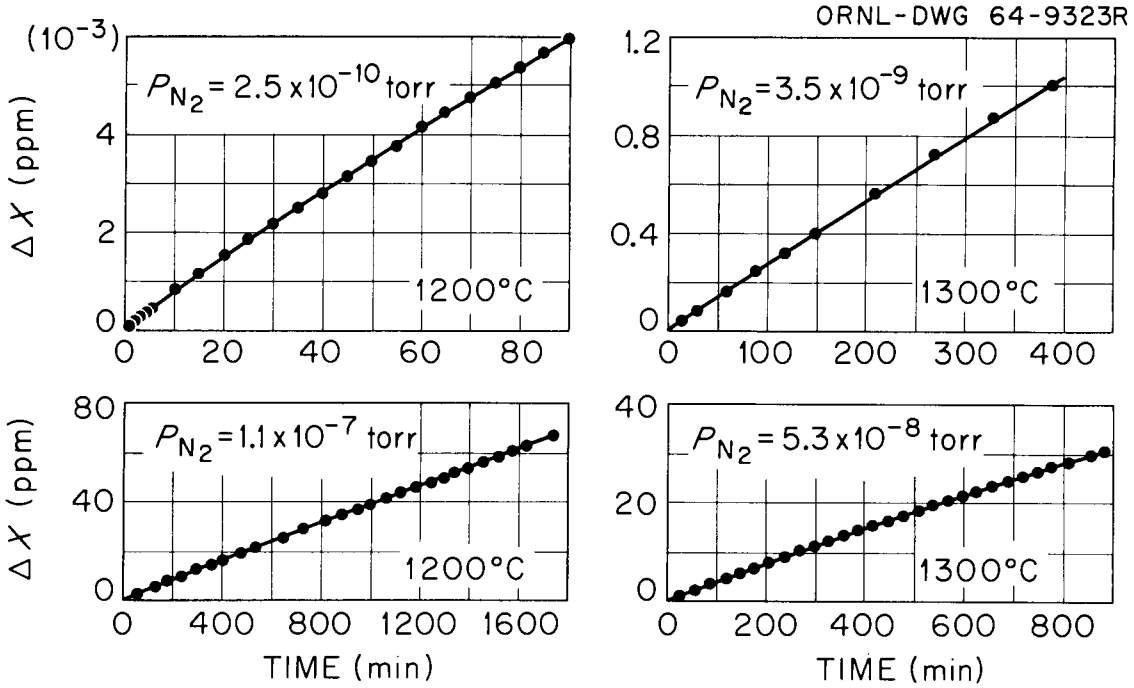

Fig. 2. Effect of N_2 Pressure (P_{N_2}) on the Sorption Rate of Nitrogen by Cb–1% Zr at 1200 and 1300°C.

Table 1. Calculated vs Measured Nitrogen Content of Cb–1% Zr[a]

Run Number	Initial Nitrogen in Cb–1% Zr (ppm)	Calculated Nitrogen Added (ppm)	Total Nitrogen, ppm	
			Calculated	Analyzed
25	31	69	100	100.5[b]
34	12.8	11.2	24	28[c]

[a]Analysis of degassed sample upon which reported data are based: 1.05 wt % Zr, 67 ppm O, 40 ppm C, and 31 ppm N.

[b]Average of 91 and 110 ppm.

[c]Average of 27 and 29 ppm.

degassed filament (88 hr at 1650°C) did not lose zirconium by vaporization. The oxygen and carbon contents were lower than the starting composition.

Figure 3 summarizes the pressure-temperature-composition relationship in the N_2/Cb–1% Zr system. The solid lines were drawn through the experimental points at a slope of two at all temperatures. Between

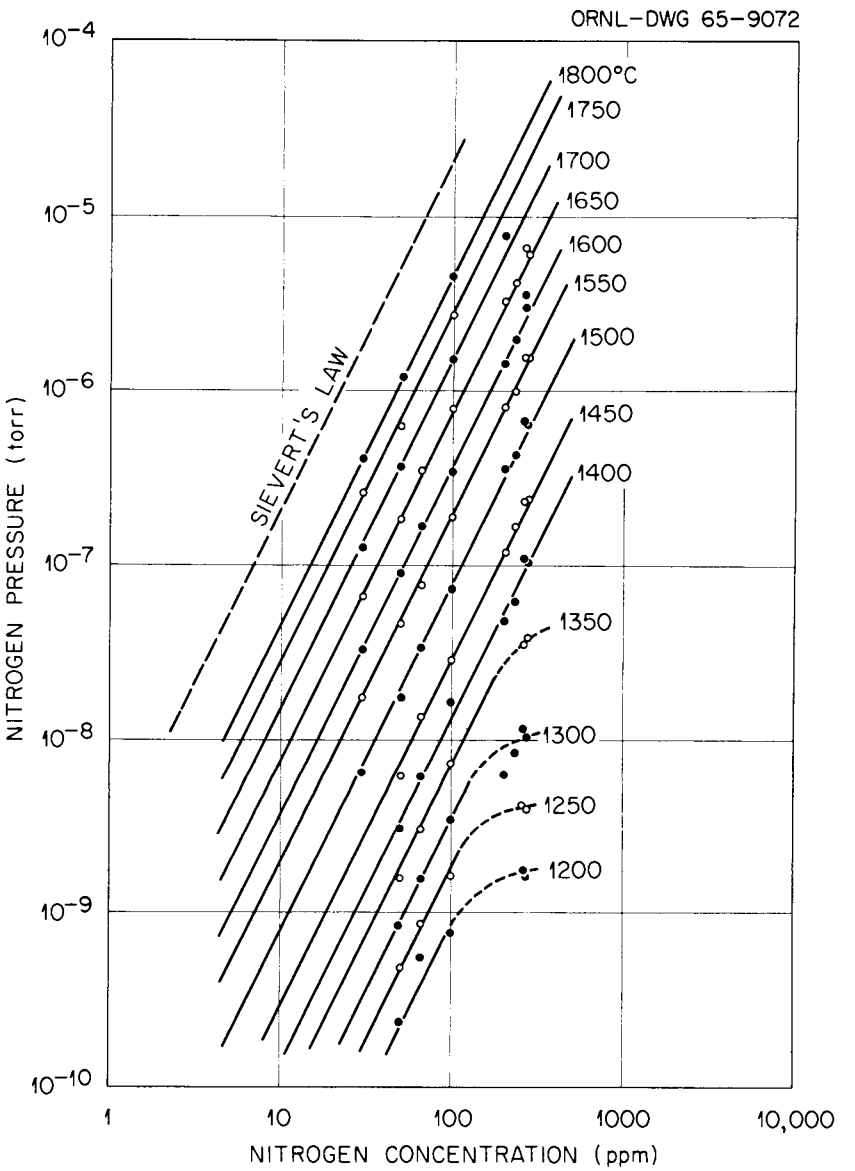

Fig. 3. Relationship Between Nitrogen Pressure (P_{N_2}) and Nitrogen Concentration ($X_{\underline{N}}$) in the Temperature Range 1200 to 1800°C.

100–200 ppm N and at 1350°C and below, the curves were drawn as dashed lines because of the uncertainty in the data and to emphasize the deviation of the data from the straight line.

Figure 4 shows the dependence of the equilibrium nitrogen pressure on 1/T for six nitrogen concentrations in the alloy. Log P_{N_2} vs 1/T for concentrations of 51, 67, and 100 ppm N plot as two straight lines intersecting at about 1400°C while only a single straight line is obtained when the nitrogen content exceeds 200 ppm. From the slopes of the lines, $\Delta\bar{H}$ values were calculated for each composition and are tabulated in

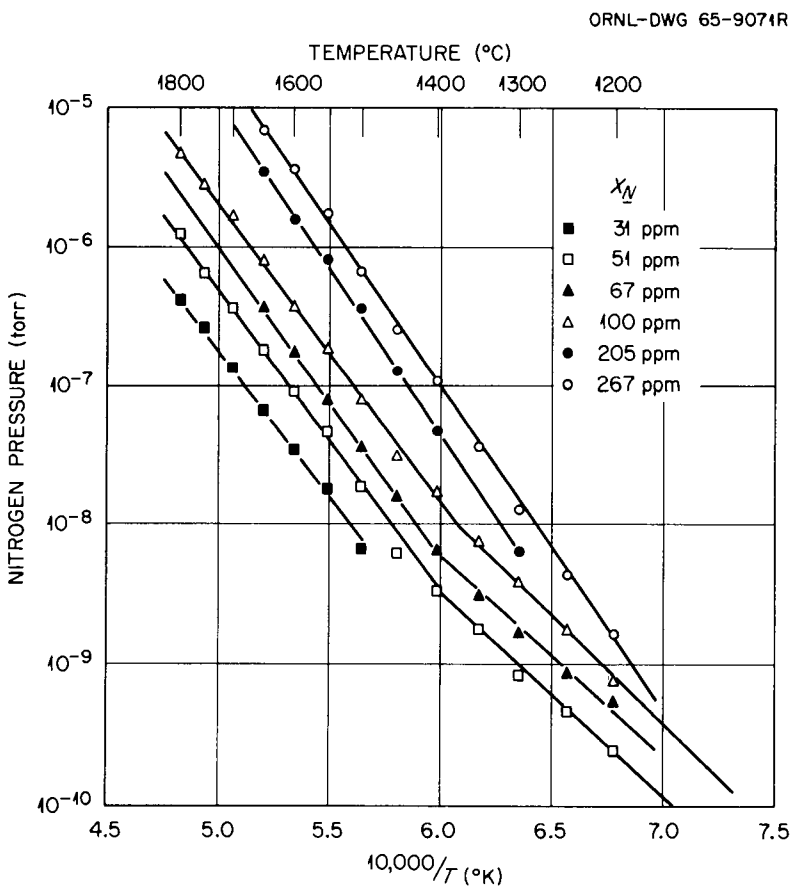

Fig. 4. Data Presented in Fig. 3 Plotted as Function of 1/T for Nitrogen Contents of 31 to 267 ppm in Cb–1% Zr.

Table 2. The average value of $\Delta\bar{H}$ was determined to be −51.5 kcal/g-atom of nitrogen above 1400°C and when $X_{\underline{N}}$, the amount of nitrogen in solution was >200 ppm. Below 1400°C, $\Delta\bar{H}$ was −34.2 kcal/g-atom of nitrogen when the nitrogen content was 100 ppm or lower.

The equilibrium constant for the reaction $1/2\ N_2 = \underline{N}$ (nitrogen in solution) was calculated from the relationship* $K = X_{\underline{N}}/(P_{N_2})^{\frac{1}{2}}$ and was found to be independent of the composition above 1400°C; however, two

*P_{N_2} = torr, X = concentration, ppm by weight.

Table 2. Partial Molar Heat of Solution of Nitrogen in Cb–1% Zr

Nominal $X_{\underline{N}}$ (ppm)	$\Delta\bar{H}$ (above 1400°C) −kcal/g-atom N	$\Delta\bar{H}$ (below 1400°C) −kcal/g-atom N
31	49.2	
51	46.7	33.4
67	52.7	33.4
100[a]	49.2	35.7
205	53.9[b]	
235	53.2[b]	
267	54.5[b]	
278	52.6[b]	
Average	51.5	Average 34.2

[a]Chemical analysis value.

[b]Values for $\Delta\bar{H}$ between 1200–1800°C.

values of K were obtained between 1200 and 1400°C as would be expected from the values of $\Delta\bar{H}$ noted above. For the sake of clarity, the average values for K for solutions containing between 31–100 ppm and for solutions containing 205–278 ppm N are plotted versus 1/T in Fig. 5.

Equation (2) is the expression for $\Delta\bar{F}^{o}$ in cal for the normal solutions

$$\Delta\bar{F}^{o} = -51,500 + 20.74T \qquad (1400\text{–}1800°C) \quad . \tag{2}$$

Equation (3) is the expression for the anomalous solutions

$$\Delta\bar{F}^{o} = -34,200 + 9.52T \qquad (1200\text{–}1400°C) \quad . \tag{3}$$

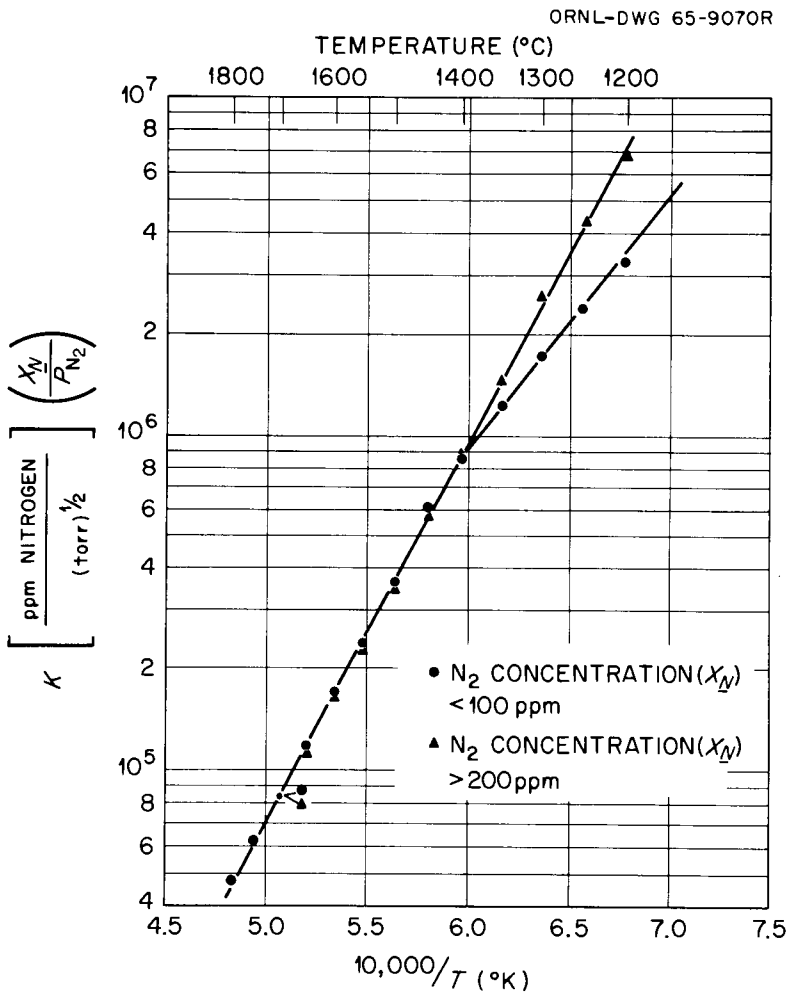

Fig. 5. Temperature Dependence of the Equilibrium Constant for the Equilibrium 1/2 N_2 = $\underline{N}$ in Cb–1% Zr.

The reference state is the infinitely dilute solution in which $a_{\underline{N}} = N_{\underline{N}}$ (atom-fraction) and P_{N_2} is expressed in atmospheres. The activity coefficients, $f_{\underline{N}}$, of selected solutions are listed in Table 3 to illustrate the temperature-composition limits of the anomalous solutions.

Table 3. Activity Coefficient of Nitrogen in Cb–1% Zr

Temperature (°C)	Equilibrium Constant		Activity Coefficient, $f_{\underline{N}}$			
	K	K_1 (a)	51 ppm N	67 ppm N	100 ppm N	267 ppm N
	$\times 10^6$					
1200	6.67	1223	2.42	2.34	1.86	1.04
1250	4.30	789	1.84	1.88	1.74	1.03
1300	2.58	474	1.47	1.53	1.53	1.05
1350	1.43	263	1.12	1.17	1.23	1.01
1400	0.88	161	0.97	1.03	1.13	1.10

(a) $K_1 = \dfrac{f_{\underline{N}} \cdot N_{\underline{N}}}{(P_{N_2})^{1/2}}$; P_{N_2} in atmospheres, $N_{\underline{N}}$ in atom-fraction

$= 1.835 \times 10^{-4}$ K .

DISCUSSION

The coincidence of the experimental data with the solid lines drawn at a slope of two in Fig. 3 shows that compositions in the range 31 to 278 ppm are solid solutions obeying Sievert's law, that is, $X_{\underline{N}} = K(P_{N_2})^{\frac{1}{2}}$. The deviation of the data shown in this figure as the dashed curves initially

suggested that concentrations in this range were near the solubility limit since the temperature-composition-pressure relationships were in the correct direction.

This early interpretation is unlikely because $\Delta\bar{H}$ normally changes at a phase boundary. As shown in Fig. 4 and Table 3, $\Delta\bar{H}$ was independent of temperature at $X_{\underline{N}} > 200$ ppm which are the concentrations that are most likely to be in the two-phase region. Additional support for this conclusion is based on the observation that $\Delta\bar{H}$ for solutions containing 31 and >200 ppm N were the same within experimental scatter. The nitrogen solubility in Cb–0.86% Zr at 1400°C has been reported to be about 5 at. % (~7500 ppm) (Ref. 5) and is in agreement with this analysis. It appears, therefore, that the solutions above 1400°C and those containing over 200 ppm N between 1200 and 1800°C exhibit the normal behavior while the solutions with less than 100 ppm N exhibit an anomaly. This is in spite of the solutions conforming to Sievert's law.

An analysis of other reported values for $\Delta\bar{H}$ may indicate why this anomalous behavior is observed. Cost and Wert (3) determined that $\Delta\bar{H}$ for columbium was –46.0 ± 2 kcal/g-atom of nitrogen while de Lamotte et al. (Ref. 5) report 40.4 kcal/g-atom of nitrogen. A more recent value of (53.5 ± 2) kcal has been reported for columbium by Pasternak (6). For Cb–0.86% Zr a value of 38.0 kcal/g-atom of nitrogen has been reported (5) for $\Delta\bar{H}$ above 1600°C compared to 51.5 kcal/g-atom N in this investigation.

As shown in Table 4, the higher values of $\Delta\bar{H}$ for both columbium and Cb–1% Zr (53.5 and 51.5 kcal, respectively) were based on data obtained

---

[5]de Lamotte, E., Huang, Y. C., Altstetter, C. J., ML-TDR-64-134 (June 1964).

[6]Pasternak, R. A., SRIA No. 132 (Oct. 1964).

Table 4. Summary of Values of $\Delta\overline{H}$ for Reaction

$1/2\ N_2\ (g) = \underline{N}$ (Cb and Cb–1% Zr)

Temperature (°C)	Metal	$\Delta\overline{H}$, kcal/g-atom N: In Ultrahigh Vacuum[a]	$\Delta\overline{H}$, kcal/g-atom N: In High Vacuum[b]	Difference in $\Delta\overline{H}$ [c] (kcal)
1100–1650	Cb	−53.5 ± 2 (Ref. 6)		
1525–2255	Cb		−46.0 (Ref. 3)	−7.5
1600–2100	Cb		−40.4 (Ref. 5)	−13.1
1600–2100	Cb–0.86% Zr		−38.0 (Ref. 5)	
1400–1800	Cb–1.0% Zr	−51.5[d]		−13.5
1200–1400	Cb–1.0% Zr	−34.2[d]		
	Difference	−17.3[d]		

[a]Base pressures $\sim 1 \times 10^{-9}$ torr.

[b]Base pressures $\sim 10^{-5} - 10^{-6}$ torr.

[c]Values of $\Delta\overline{H}$ in high vacuum subtracted from those of $\Delta\overline{H}$ in ultrahigh vacuum.

[d]This study.

in a baked, ultrahigh vacuum system capable of attaining base pressures approaching 10^{-10} torr while the lower $\Delta\overline{H}$ values were based on measurements made in systems capable of $\sim 10^{-5}$ to 10^{-6} torr. At the latter pressures, both columbium and Cb–1% Zr will be contaminated with oxygen due to the residual gases in a vacuum system (7). Therefore, the spread

[7]Inouye, H., ORNL-3674 (Sept. 1964).

in $\Delta\overline{H}$ above 1600°C of 7.5–13.5 kcal may reflect the influence of oxygen on the equilibrium nitrogen pressures for both columbium and Cb–1% Zr. The observed difference for $\Delta\overline{H}$ below 1400°C in this investigation was 17.3 kcal/g-atom nitrogen and could also be due to the influence of oxygen (67 ppm, see Table 1) in the alloy.

One mechanism that may be responsible for the anomalous solution behavior in Cb–1% Zr is indicated in Table 5. These data show that zirconium in

Table 5. Pressure-Temperature-Composition Relationships in Systems N_2/Cb and N_2/Cb–1% Zr

Temperature (°C)	$X_{\underline{N}}$ (ppm)	Equilibrium Nitrogen Pressure, torr	
		Columbium[a]	Cb–1% Zr[b]
1200	~70	3×10^{-9}(c)	5×10^{-10}
1500	~70	2×10^{-6}	3×10^{-8}
1650	~70	1.6×10^{-5}	3.8×10^{-7}
1200	~260	3×10^{-8}	1.6×10^{-9}
1500	~260	2.3×10^{-5}	6.6×10^{-7}
1650	~260	2×10^{-4}(c)	6.6×10^{-6}
1600	75	1×10^{-5}	
1600	430(c)		1×10^{-5}

[a]Pasternak, R. A., SRIA No. 132, (Oct. 31, 1964).

[b]This study.

[c]Estimated.

columbium sharply lowers P_{N_2}; or conversely, P_{N_2} over the alloy increases in the absence of zirconium. Thus the removal of zirconium from solution (by association or combination with oxygen) could cause the observed increase in P_{N_2} below 1400°C, noted in Fig. 3. Since it appears that the anomalous behavior also occurs in columbium, the removal of zirconium from solution is not the only factor causing the anomaly.

SUMMARY AND CONCLUSION

An ultrahigh vacuum technique of high sensitivity was developed to measure the thermodynamic properties of solutions of nitrogen in Cb–1% Zr. In the composition range 31–278 ppm N, the solutions obey Sievert's law.

An anomalous solution below 1400°C was attributed to an oxygen-nitrogen interaction that appears to be dependent on $X_{\underline{N}}$. This observation may explain in part why the mechanical properties of the alloy are difficult to reproduce.

ACKNOWLEDGMENT

The research described in this report was performed primarily by S. H. Wheeler under the supervision of the author. The experimental technique is a modification of a method suggested by R. E. Clausing for measuring gas-metal reaction kinetics in ultrahigh vacuum.

INTERNAL DISTRIBUTION

1–3. Central Research Library
4–5. ORNL – Y-12 Technical Library
Document Reference Section
6–15. Laboratory Records
16. Laboratory Records, RC
17. ORNL Patent Office
18. G. M. Adamson, Jr.
19. S. E. Beall
20. G. E. Boyd
21. J. E. Cunningham
22. F. L. Culler
23. J. H. DeVan
24. D. A. Douglas
25. A. P. Fraas
26. J. M. Googin (Y-12)
27. W. R. Grimes
28. A. G. Grindell
29. W. O. Harms
30. M. R. Hill
31. H. W. Hoffman
32. H. Inouye
33. W. H. Jordan
34. C. E. Larson (K-25)
35. C. F. Leitten, Jr.
36. R. N. Lyon
37. H. G. MacPherson
38. R. E. MacPherson
39. R. W. McClung
40. D. L. McElroy
41. F. R. McQuilkin
42. A. J. Miller
43. P. Patriarca
44. H. W. Savage
45. J. E. Savolainen
46. J. L. Scott
47. G. M. Slaughter
48. S. H. Smiley (K-25)
49. A. Taboada
50. A. M. Weinberg
51. J. R. Weir

EXTERNAL DISTRIBUTION

52. C. J. Alstetter, University of Illinois
53. G. M. Anderson, AEC, Washington
54. C. H. Armbruster, Wright-Patterson AFB
55–57. V. P. Calkins, General Electric, NMPO
58. S. S. Christopher, AEC, Washington
59–61. D. F. Cope, AEC, Oak Ridge Operations Office
62. J. W. R. Creagh, NASA, Lewis Research Center
63. J. Davis, Jet Propulsion Laboratory
64. R. W. Dayton, Battelle Memorial Institute
65. G. K. Dicker, AEC, Washington
66. E. M. Douthett, AEC, Washington
67. J. F. Eckel, Virginia Polytechnic Institute
68. J. K. Elbaum, Code MAMP, Wright-Patterson AFB
69. D. DeHalas, Pacific Northwest Laboratory, Richland
70. D. C. Goldberg, Westinghouse Astronuclear Laboratory
71–72. D. H. Gurinsky, Brookhaven National Laboratory
73. R. Hall, NASA, Lewis Research Center
74. R. C. Hamilton, Institute for Defense Analyses,
1666 Connecticut Avenue, N. W., Washington, D. C.
75. E. E. Hoffman, General Electric, Cincinnati
76. J. S. Kane, University of California

77. F. D. Kingsbury, G.E., Nuclear Materials and Propulsion Operation
78. C. E. Lundin, University of Denver
79. J. J. Lynch, NASA, Washington
80. J. L. Lytton, Lockheed Missile and Space Company (NASA)
81. T. P. Moffitt, NASA, Lewis Research Center
82–84. T. A. Moss, NASA, Lewis Research Center
85. R. A. Noland, Argonne National Laboratory
86. Ralph Pasternak, Standford Research Institute
87. Louis Rosenblum, NASA, Lewis Research Center
88. N. D. Sanders, NASA, Lewis Research Center
89. H. Schwartz, NASA, Lewis Research Center
90. F. C. Schwenk, AEC, Washington
91–95. J. M. Simmons, AEC, Washington
96. D. K. Stevens, AEC, Washington
97. G. W. Wensch, AEC, Washington
98. M. J. Whitman, AEC, Washington
99. Division of Research and Development, AEC, ORO
100–114. Division of Technical Information Extension