MARTIN MARIETTA ENERGY SYSTEMS LIBRARIES
3 4456 0250297 7

CENTRAL RESEARCH LIBRARY
DOCUMENT COLLECTION

O AL LABORATORY
operated by
UNION CARBIDE CORPORATION
for the
U.S. ATOMIC ENERGY COMMISSION

ORNL-TM-1366

59

Classification Cancelled
Or Changed To
By Authority Of
By Date 11.16.71

COMPARISON OF 1-, 2-, AND 3-LOOP SYSTEMS FOR NUCLEAR TURBINE-GENERATOR SPACE POWER PLANTS OF 300 KW TO 5 MW OF ELECTRICAL OUTPUT

(Title Unclassified)

A.P. Fraas J.W. Michel

CENTRAL RESEARCH LIBRARY
DOCUMENT COLLECTION
LIBRARY LOAN COPY
DO NOT TRANSFER TO ANOTHER PERSON
If you wish someone else to see this document, send in name with document and the library will arrange a loan.

[redacted]

LEGAL NOTICE

This report was prepared as an account of Government sponsored work. Neither the United States, nor the Commission, nor any person acting on behalf of the Commission:

A. Makes any warranty or representation, expressed or implied, with respect to the accuracy, completeness, or usefulness of the information contained in this report, or that the use of any information, apparatus, method, or process disclosed in this report may not infringe privately owned rights; or

B. Assumes any liabilities with respect to the use of, or for damages resulting from the use of any information, apparatus, method, or process disclosed in this report.

As used in the above, "person acting on behalf of the Commission" includes any employee or contractor of the Commission, or employee of such contractor, to the extent that such employee or contractor of the Commission, or employee of such contractor prepares, disseminates, or provides access to, any information pursuant to his employment or contract with the Commission, or his employment with such contractor.

To: Recipients of ORNL-TM-1366

Report No.: ORNL-TM-1366 Classification: [redacted]

Author(s): A. P. Fraas, J. W. Michel

Subject: Comparison of 1-, 2- and 3-Loop Systems for Nuclear Turbine-Generator Space Power Plants of 300 Kw to 5 Mw of Electrical Output (Title Unclassified)

Request compliance with indicated action:

Please replace Figure 16 on page 61 in your copy(ies) of the subject report with the attached figure. It has been prepared on gummed stock for your convenience.

N. T. Bray, Supervisor
Laboratory Records Department
Technical Information Division

C dr
7.5.66

UCN-6838
(3 8-65)

UCN-6838
(3 8-65)

[redacted]

ORNL-TM-1366

Contract No. W-7405-eng-26

REACTOR DIVISION

COMPARISON OF 1-, 2-, AND 3-LOOP SYSTEMS FOR NUCLEAR TURBINE-GENERATOR SPACE POWER PLANTS OF 300 KW TO 5 MW OF ELECTRICAL OUTPUT

A. P. Fraas J. W. Michel

MARCH 1966

OAK RIDGE NATIONAL LABORATORY
Oak Ridge, Tennessee
operated by
UNION CARBIDE CORPORATION
for the
U.S. ATOMIC ENERGY COMMISSION

[redacted]

MARTIN MARIETTA ENERGY SYSTEMS LIBRARIES
3 4456 0250297 7

[redacted]

CONTENTS

	Page
ABSTRACT	1
INTRODUCTION	1
SUMMARY AND CONCLUSIONS	3
1. DELINEATION OF REPRESENTATIVE SYSTEMS	8
Design Precepts for the Systems to be Compared	8
System Flow Sheets	12
Thermodynamic Cycle Calculations	21
2. PROPORTIONS, SIZE, AND WEIGHT OF MAJOR COMPONENTS	30
Effects of System Choice on Radiator Size and Pumping Losses	30
Relation to SNAP-50 Systems	32
Calculational Procedure	32
Auxiliary Radiator Heat Load	32
Relative Radiator Sizes	33
Radiator for Power Conversion Equipment	33
Total Radiator Height	33
Radiator Tube, Fin, and Armor Configurations	34
Form of Meteoroid Armor	34
Fabrication and Thermal Stress Problems	37
Effects of Tube Spacing on Radiator Weight	37
Radiator Weight Estimates	39
Effects of Vapor Density	45
Detailed Calculations	45
Manifold and Duct Weight	46
Meteoroid Armor Thickness	47
Radiator Weight	47
Auxiliary Radiator Construction	52
Effects of Power on the Proportions of Direct Condensing Radiators	52
Shell-and-Tube Condensers	52
Boilers	55
Turbine-Generator Units	57

[redacted]

[redacted]

Size and Weight of Integrated Power Plants 58

Power Plant Layouts 60

Size and Weight of 367 kw(e) Power Plants 66

Size and Weight of Power Plants for Outputs of 367 kw(e), 1 Mw(e), and 5 Mw(e) 70

Shielding Problems 72

3 RELIABILITY OF MECHANICAL COMPONENTS 75

Basic Reliability Considerations and Data 75

Materials Compatibility 75

System Integrity 76

Meteoroid Punctures 80

Turbines, Generators, Pumps, and Motors 81

Valves 87

Bellows Expansion Tanks 90

Electric Heaters 91

Reactor Control Drive Mechanisms 91

Instruments 91

Mechanical Reliability of the Fluid Systems 95

Leaks 97

Pumps 98

Turbine-Generator 100

Valves 100

Accumulators 101

Jet Pumps 102

Reactor Control Drives and Control Valve Operators 102

Overall Incidence of Mechanical Failures 103

4. RELIABILITY OF INSTRUMENTATION AND CONTROL EQUIPMENT 105

Basic Control Functions for Normal Operation 105

Boiler Control 105

Condenser Temperature Control 107

Radiator Temperature Control 110

Reactor Controls 111

Electrically Driven Pumps 112

Requirements for Electronic Equipment 113

[redacted]

[redacted]

Failure Modes and Hazards Problems 113
Amount of Essential Instrumentation 116
Reliability of Components for Electronic Equipment 123
Overall Reliability of the Complete Power Plant 125
Effects of Electric-Motor-Driven Pumps 128
Effects of Electronic Equipment 129
Instrument Pickups 131
Hazards Considerations for Manned Vehicle Installations ... 131
5. ZERO-GRAVITY PROBLEMS 133
Systems Using Once-Through Boilers Coupled to Liquid-Cooled Reactors 133
Boiling Reactor Systems 134
6. STARTUP PROCEDURES 136
Proposed Startup Procedure for the MPRE 136
Preheating 136
Starting the Boiler in a Spinning Vehicle 137
Starting the Boiler Under Zero-g Conditions 138
Starting the Turbine-Generator 139
Connecting the Generator to the Load 140
Comparison of Start-up Problems for Typical Systems 140
Comparison with CANEL Startup Procedures 143
7. MAJOR PROBLEM AREAS 144
General Problems Involving All Systems 144
Systems Employing Once-Through Boilers 145
Liquid-Cooled Reactor Systems 145
Single-Loop Systems 146
REFERENCES 147

[redacted]

[redacted]

COMPARISON OF 1-, 2-, AND 3-LOOP SYSTEMS FOR NUCLEAR TURBINE-GENERATOR SPACE POWER PLANTS OF 300 KW TO 5 MW OF ELECTRICAL OUTPUT

A. P. Fraas J. W. Michel

ABSTRACT

A series of six representative 1-, 2-, and 3-loop systems incorporating the principal features of most of the Rankine cycle systems that have been proposed are delineated for purposes of comparison. For a reactor outlet temperature of 2000°F the relative sizes and weights as estimated from basic thermodynamic, heat transfer, and fluid flow considerations are roughly in the ratios of 1, 1.5, and 2 for the 1-, 2-, and 3-loop systems, respectively. Statistical data on component reliability indicate that the mechanical reliabilities of the power plants for 10,000 hr of operation are of the order of 0.9, 0.8, and 0.6, respectively, for the 1-, 2-, and 3-loop systems. The analysis indicates that the instrumentation and control equipment will have a reliability about equal to that of the mechanical equipment for a single-loop system, but the reliability will fall off much more rapidly with an increase in the number of loops than appears to be the case for the mechanical equipment. The control of free liquid surfaces under zero-g conditions appears to be more difficult for single-loop systems, but there is too little experimental background to judge just how difficult these problems may prove to be. Start-up and hazards problems are discussed, and the advantages of a spinning vehicle for manned missions are emphasized.

INTRODUCTION

When the MPRE Program was transferred to the jurisdiction of Mr. H. B. Finger in July, 1965, he requested that studies be made of a number of major problem areas. Perhaps the most significant of these was concerned with the relative merits of the various 1-, 2-, and 3-loop Rankine cycle systems that have been proposed for nuclear reactor turbine-generator power plants for space vehicles. While the need for a comprehensive study in this area is evident, there are so many factors

[redacted]

that must be considered that it is not surprising that previous attempts to make such an evaluation have been limited in scope. A proper comparison should include such factors as system size, weight, complexity, stability and control characteristics, reliability, hazards characteristics, zero-g problems, start-up, and adaptability to a wide range of missions.

In setting up this study it appeared that the best approach would be to compare a set of representative idealized systems that incorporate the best features of the various space power plants that have been under development. The first section of the report delineates such a set of six systems designed to be consistent with a common basic set of design precepts. The second section of the report is directed toward the determination of the relative size and weight of the major components for these six 1-, 2-, and 3-loop systems. The third section is devoted to an examination of the information available on the mechanical reliability of well developed equipment of the type projected for the space power plants, and an estimate of the best reliability that one might reasonably hope to achieve in a well developed system. The fourth section treats system control requirements, failure modes and hazards problems, instrumentation requirements, and the reliability of the control equipment. The fifth section is devoted to a short review of the problems associated with the control of free-liquid surfaces under zero-g conditions and the extent to which these problems appear in the six systems considered. The sixth section is concerned with the problems of starting up a power plant in orbit and the relative degree of difficulty to be expected for the six systems. A seventh section is included at the end to summarize the problems that emerged from the analysis and direct attention to those areas that particularly merit attention if the bases for choosing between the various systems are to be improved.

It is inherent in the study that so many complex problems are involved that it has not been possible to make the presentation at once reasonably rigorous, sufficiently detailed to facilitate a critical check of the analysis, and yet easy to follow. An effort has been

made to include enough material so that a reader familiar with these specialized problems will see the reasons for each step in the analysis and maintain some perspective on its overall implications. The amount of this background information has been limited in the interests of conciseness.

SUMMARY AND CONCLUSIONS

Basic heat transfer, thermodynamic, and structural considerations indicate that a series of refractory metal 1-, 2-, and 3-loop systems designed according to a common set of design precepts for a 2000°F reactor outlet temperature will have radiator sizes and power plant weights (except for shielding) in the ratios of 1, 1.5, and 2. Following the same design precepts, a single-loop stainless steel system designed for a reactor outlet temperature 1540°F will have a radiator size 1.8 times that of a single-loop 2000°F refractory metal system and a power plant weight (not including the shield) 1.33 times that of the refractory metal system. It should be emphasized that this comparison was between type 304 stainless steel on the one hand and a refractory alloy of greater strength than Nb-1% Zr-1/2% C, i.e., an alloy comparable in strength to D-43 or T-111, both of which are in the early stages of development. Nb-1% Zr-1/2% C gives a heavier plant.

Reliability data for well developed equipment indicates that a single-loop system may be developed to give a probability of around 0.90 of operating 10,000 hr without a mechanical failure. Application of the same data leads to corresponding values for the 2-loop and 3-loop systems of about 0.8 and 0.6, respectively.

The number of basic control functions required for normal operation increases more rapidly than linearly with the number of loops in the system. The complexity of the electronic equipment required to carry out these control functions as well as related diagnostic and safety functions increases much more rapidly than linearly with the number of loops in the system. Application of standard Department of Defense specifications for the reliability of high quality electronic

components to circuits typical of those that would be required to carry out the control functions for normal operation indicates that even through the optimum use of derated equipment and redundancy, both in the components and the circuits, the reliability of the electronic equipment required for a single-loop system will give a probability of the order of 0.90 of surviving 10,000 hr of unattended operation. The corresponding values for multi-loop systems with once-through boilers appear to be much lower — well below 0.50.

In comparing the problems of free liquid surface control in the various systems, the problems in the condensers of all of the systems studied appear to be similar, and reasonably satisfactory demonstrations have been made that they can be solved. Recirculating boilers with their associated vapor separators and expansion tanks pose more difficult problems than once-through boilers, but there is little experience to serve as a basis for appraising the relative difficulty of these problems. A few ground tests on both boilers and vapor separators have been encouraging, as has a flight test of a vapor separator and expansion tank assembly. Further work will be required to provide a better basis for judgment.

Over 300,000 hr of ORNL operating experience with electric heaters in potassium indicates that these heaters have a mean life to failure of only about 2500 hr, and that the mode of failure may lead to a rupture of the sheath. Contamination of the liquid metal in which the heaters are immersed is likely even if elaborate instrumentation and control equipment is provided to sense an incipient failure and switch off the heater. While major improvements in heaters are expected, this experience implies that the power plant control scheme should not be based on the use of a parasitic load consisting of electric heaters cooled by liquid metal.

Over 10^9 hr of operating experience with conventional electric motors in the Oak Ridge Gaseous Diffusion Plant indicates a failure probability of about 1% for 10,000 hr of operation. High-temperature canned-rotor electric-motor-driven pump units are substantially more complex and subject to additional failure modes (e.g., the bore seal).

If their failure rate is only three times as great as that of well developed industrial motors, the reliability of any system depending on a canned rotor electric motor driven pump is seriously degraded.

Free turbine driven pumps in a vapor system appear to be much more reliable than canned rotor electric motor driven pumps because they are simpler mechanically, are subject to fewer failure modes, entail smaller temperature differences, and are not dependent on either an electric power supply or a cooling system for the windings.

Over 10^8 hr of experience with well-developed bellows seal valves operating at room temperature, coupled with over 200,000 hr of experience with both bellows seal valves and accumulators in liquid metal systems, indicates that it will not be possible to get a satisfactory reliability in either a bellows-type expansion tank or a continuously operated control valve.

Once-through boilers appear to require the use of two continuously controlled throttle valves or the equivalent thereof, and reliability data indicate that these components will be less reliable than canned rotor pumps. Because of this the reliability of once-through boiler systems is much lower than that of recirculating boiler systems. In addition, once-through boiler systems depend on the proper functioning of a much greater amount of complex electronic equipment than recirculating boiler systems. The electronic equipment contributes a large further difference in reliability, particularly for unmanned missions. Hence, a better approach to the boiler control and liquid inventory distribution problems than any found in this study will be required to obtain an acceptable reliability for once-through boiler systems. It may be that an expansion tank similar to that contemplated for the recirculating boiler system will prove to be the best solution.

The probability that the crew of a manned space vehicle will be subject to a serious radiation dose as a consequence of a fuel element leak in a single-loop system appears to be substantially lower than the probability of a major fission product release caused by a coolant flow stoppage in a liquid-cooled reactor system.

If a single-loop system is judged to be unacceptable because of the possibility of contamination of the radiator by a fuel element leak, the boiling reactor 2-loop systems of Figs. 3 and 4 give smaller radiators, lower system weights, and higher degrees of reliability than the liquid-cooled reactor 2-loop system of Fig. 5.

The best way of assuring that the crew will not get a serious radiation dose as a consequence of a reactor circuit pump outage appears to be provision for afterheat removal by thermal convection. This will require that the space vehicle be spun to provide a centrifugal field.

For unmanned missions a single-loop system seems to be clearly superior to the others in all respects except for the uncertainties associated with the control of free liquid surfaces under zero-g conditions. The high boiler pressure drop available with the single-loop system of Fig. 2 makes its zero-g problems comparable with those of the once-through boilers. This leaves only the vapor separator-expansion tank unit as presenting a zero-g problem unique to the single-fluid system.

In weighing the costs of the efforts required to solve the various problems of a space power plant development program against the possible returns, it appears that the costs of solving the zero-g problems of the single-loop system may be far less than the costs associated with trying to get either the higher degree of reliability required for a multi-loop system or the background of refractory metal technology required to make a multi-loop system competitive with a stainless steel single-loop system.

A single-loop system with a liquid-cooled reactor and a flash evaporator might give less difficult problems with the control of free liquid surfaces under zero-g conditions than a single-loop boiling reactor system.

In single-loop systems it is possible for radioactive material to contaminate the radiator. This does not present a problem in unmanned vehicles, but in manned vehicles it will require the use of a separated isotope of potassium (^{39}K) for reactor outputs above about 1 Mw(t). Estimates indicate that the amount of activity carried to the radiator

by mass transfer will be negligible, and the amount of activity that might escape from a leaking fuel element would increase the radiation dose in the crew compartment by about 2 mr/hr. This would be reduced by a factor of about 3 if the spacecraft were designed so that about 10% of the equipment and supplies were interposed between the power plant and the crew.

The reactor core sizes and hence the shield weights were found to be nearly the same for all six systems considered.

1. DELINEATION OF REPRESENTATIVE SYSTEMS

After surveying the literature to examine the basic features of the many systems that have been proposed, it became evident that a meaningful comparison of the principal systems could be made only if a common set of design precepts were established for the entire set. Once this was done flow sheets were prepared, and a set of basic thermodynamic cycle calculations were made to facilitate estimates of cycle performance and component proportions. This preliminary work is summarized in the three subsections below.

Design Precepts for the Systems to be Compared

As shown in companion reports,[1,2,3] sintered UO_2 in slender cylindrical capsules gives a smaller reactor core size for long-lived, high-power-density reactors than any other type of fuel for which extensive test data are available.

Both lithium and potassium were considered as coolants for the liquid-cooled reactors. As shown in a companion report,[4] in high-power, long-lived reactors where fuel burnup considerations are controlling, lithium will permit only a minor reduction in core diameter as compared to potassium. On the other hand, it has the disadvantage that, if UO_2 is used as the fuel, lithium poses a serious hazards problem since it will react exothermically with UO_2. Further, its melting point is 357°F as compared to 145°F for potassium, thus increasing the amount of preheat required for startup. While NaK would have a still lower melting point than potassium, the induced activity would be from 100 to 10,000 times as great, thus presenting shielding problems. Thus, while potassium leads to higher pumping power losses and heavier pressure vessels than lithium, it was chosen as the fluid for all of the reactor circuits as well as for the thermodynamic cycle. For the indirect condensers and auxiliary cooling systems, NaK was chosen as the heat transfer fluid.

Except for the above two items, the system proportions and component performance defined for SNAP-50 systems in the latest Pratt &

Whitney Reports were employed where applicable.[5,6,7] For example, while any number of independent and parallel circuits might be employed for the radiators in systems with indirect condensers, it appears from SNAP-50 (and SNAP-8) studies that four parallel circuits give close to the optimum overall system reliability.

A coolant temperature rise of 100°F through the liquid-cooled reactors was employed because it is the value used in the later CANEL work on SNAP-50. Analysis indicates that the system performance and weight are not very sensitive to moderate variations in this parameter.

The reactor power was chosen as 2.2 Mw(t) for the base condition to facilitate a direct comparison with the CANEL SNAP-50 information. The study was then extended to cover systems designed to produce 1 Mw and 5 Mw of electric power.

On the basis of values used by P&W in CNLM-6292, the efficiency of the main turbines was taken as 83%, the efficiency of the electrical generators as 86%, the efficiency of canned-rotor motors as 80%, and the efficiency of centrifugal pumps as 50%. On the basis of ORNL experience, the efficiency of small turbines for free-turbine-driven feed pumps was taken as 60%.

The temperature of the coolant leaving the windings of the electric generators and motors was taken as 625°F, and the coolant temperature rise was taken as 68°F to be consistent with the CANEL SNAP-50 work.

The pressure drops in the liquid-cooled reactor circuits and in the NaK circuits for the indirect radiator systems were taken to be similar to those for the corresponding SNAP-50 systems.

Free turbine-driven pumps were used in the loops in which boiling occurs, since these components appear to be much more reliable than electric motor-driven canned rotor pumps. When used in the main thermodynamic cycle, their vapor consumption was estimated to be 3% of the total vapor flow rate, and the turbine exhaust was used to heat a stage of the regenerative feed heater. For a 2-loop system in which a boiling reactor circuit heats the boiler of the thermodynamic cycle, the same conditions were assumed with the condenser for the turbine of the primary circuit pump serving as a feed heater stage for the thermodynamic cycle.

In view of long-range considerations, the best choice for the structural material appeared to be a refractory metal alloy similar to D-43, a niobium base alloy with sufficient strength to be suitable for a reactor outlet temperature of 2000°F.[8] While some other refractory alloy such as T-111 might be employed with a temperature of possibly as much as 2200°F, it is believed that this would have little effect on the relative sizes and weights of the components for the various systems compared in this study.

Magnesium oxide was chosen as the reflector material for all of the reactors, because it appears to be the best material available for the purpose as shown by extensive in-pile testing.[4]

The number of auxiliary systems was kept to a minimum. To this end, the system fluid was used for the lubrication of the bearings in the turbines, generators, and motors and for the cooling systems for both the generators and the electric motor-driven pumps. It was assumed that both the reflector and the shield would be designed so that, even for the manned missions, they would be cooled by 0.4 in. heat pipes spaced on 2 in. centers to provide sufficient redundancy to assure a very low probability of failure.

For manned vehicles the radiation dose at 90 deg to the side of the shield was taken as 1000 times that in the direction of the crew compartment. The reactor-crew separation distance was taken as 150 ft. The equivalent of 30 g/cm^2 of shielding is probably obtainable by judicious disposition of equipment and supplies between the power plant and the crew. In the event of serious difficulty in a power plant, provisions will be made so that the power plant could be jettisoned within 24 hr of the occurrence of the difficulty.

In the interest of reliability, the generator and reactor control system should be kept as simple as possible. The generator output voltage and frequency will be permitted to vary ±10% in transients involving a 20% step change in the load. Recovery from a transient need not be rapid. The voltage and frequency should be held within ±5% (and if possible within ±2%) under steady-state conditions.

In manned vehicles the electronic control equipment will be located in a region accessible to the crew so that it can be maintained.

To give a structurally well-proportioned launch package, the radiators should be cylindrical in form (as in the SNAP-50 layouts for the Titan III).

The above design precepts and bases for the comparative study are summarized in Table 1.

Table 1. Summary of Design Precepts for Comparing a Series of Idealized Systems Typical of Advanced Rankine Cycle Space Power Plants

Reactor	
Fuel	UO_2
Burnup, at % (max)	2.5
Fuel element diam, in.	0.25
Coolant	Potassium
Coolant temperature rise (in liquid-cooled cores), °F	100
Moderator in core	None
Reflector material	MgO
Reflector thickness, in.	3 in. to 5 in.
Coolant exit temp., °F	2000°F
Core structural material	Nb alloy
Reflector cooling	Conduction and radiation
Power output, Mw(t)	2.2
Control provisions	4 Plugs in the end reflector
Shield	
Cooling system	Heat pipes
Ratio of dose at side to that in direction of crew compartment	1000
Reactor-crew separation distance, ft	150
Shielding value of equipment and supplies, g/cm^2	30
Provision for jettisoning power plant	Yes
Power Plant	
Voltage variation in 20% load transient, % (max)	±10
Frequency variation in 20% load transient, % (max)	±10
Steady state variations in voltage and frequency, % (max)	±5

Table 1. (Continued)

Steady state variations in voltage and frequency desired, %	±2
Pump drives for boiler circuits	Free turbine
Vapor consumption of free turbines in terms of total vapor flow from boiler, %	3
Pump drives for liquid circuits	Canned rotor pumps
Efficiency of main turbine, %	83
Efficiency of generator, %	86
Efficiency of pump drive turbines, %	60
Efficiency of canned rotor motors, %	80
Efficiency of centrifugal pumps, %	50
Temp. of coolant leaving windings of generator and motors, °F	625
Number of parallel NaK circuits for indirect radiation systems	4

System Flow Sheets

In attempting to assess the reliability, control, stability, and weight characteristics of various 1-, 2-, and 3-loop systems for Rankine cycle systems, it appeared best to base the comparison on a series of idealized power plants ranging from a single-loop system similar to the MPRE to a 3-loop system similar to the latest CANEL SNAP-50 system. Six systems were chosen in order to give sufficient variety to include most of the design compromises that might be made and yet confine the study to a set of systems in which each could be compared with the others on a consistent basis. While it is the most complex of these systems, the 3-loop system does not include all of the complexities of either the CANEL SNAP-50 3-loop or the SNAP-8 system. At least it can be said that, from the complexity standpoint, it should compare more favorably than they with the 1- and 2-loop systems.

Flow sheets for the six systems considered are presented in Figs. 1 through 6. The single-loop MPRE system essentially as it has stood for the last three years was used as the first system. The second is a

[redacted]

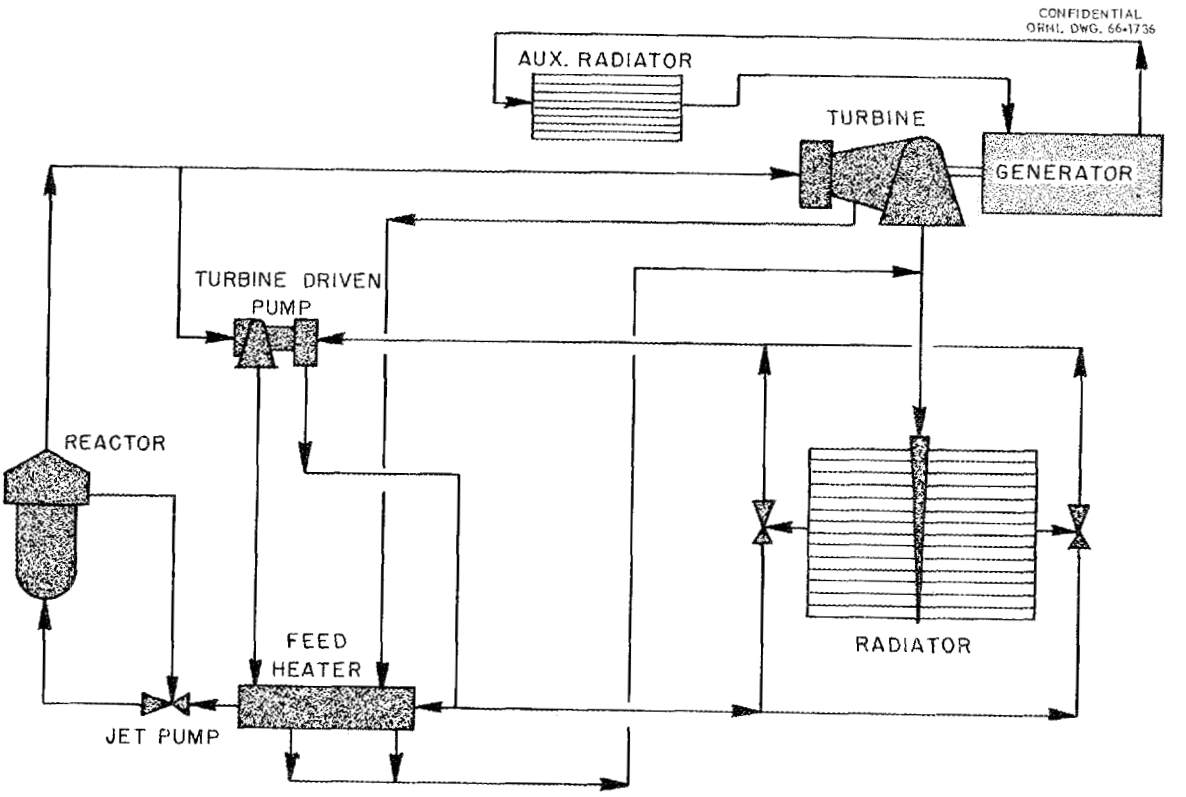

Figure 1. Single loop system with jet pumps to recirculate liquid through the boiler and a direct condensing radiator.

[redacted]

[redacted]

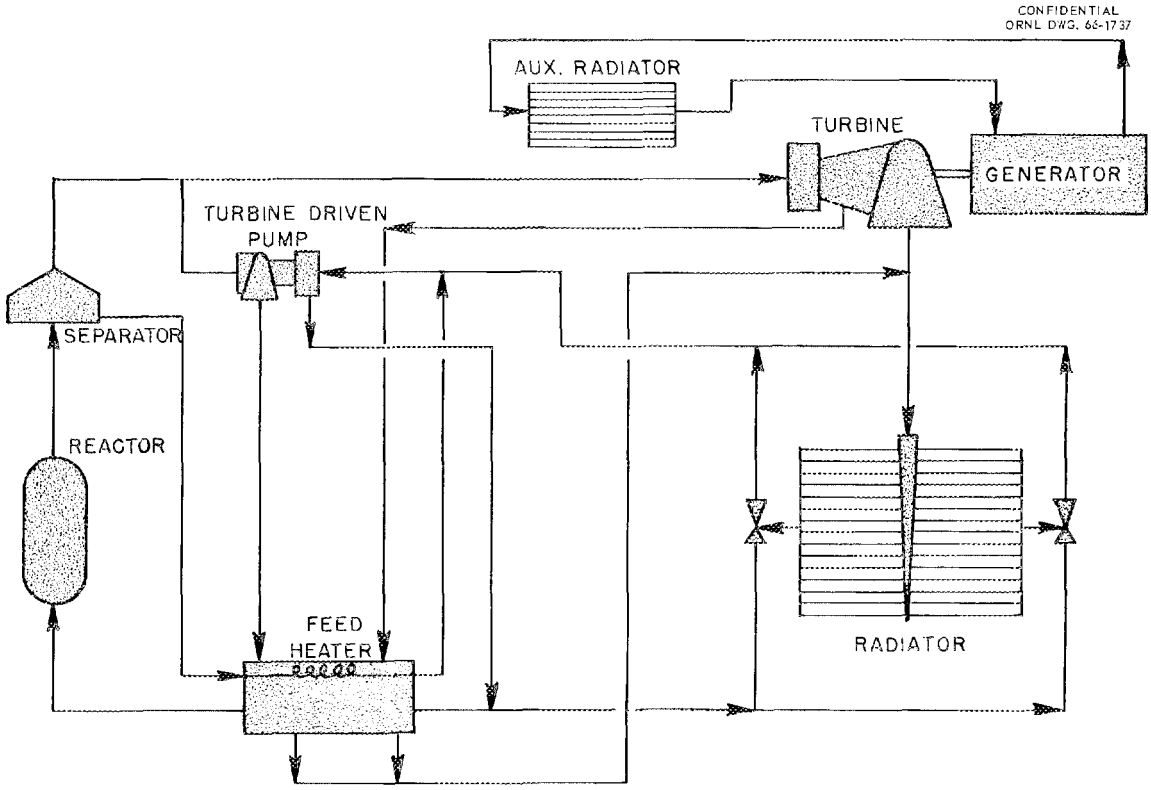

Figure 2. Single loop system with liquid recirculated through the boiler by the feed pump and a direct condensing radiator.

[redacted]

[redacted]

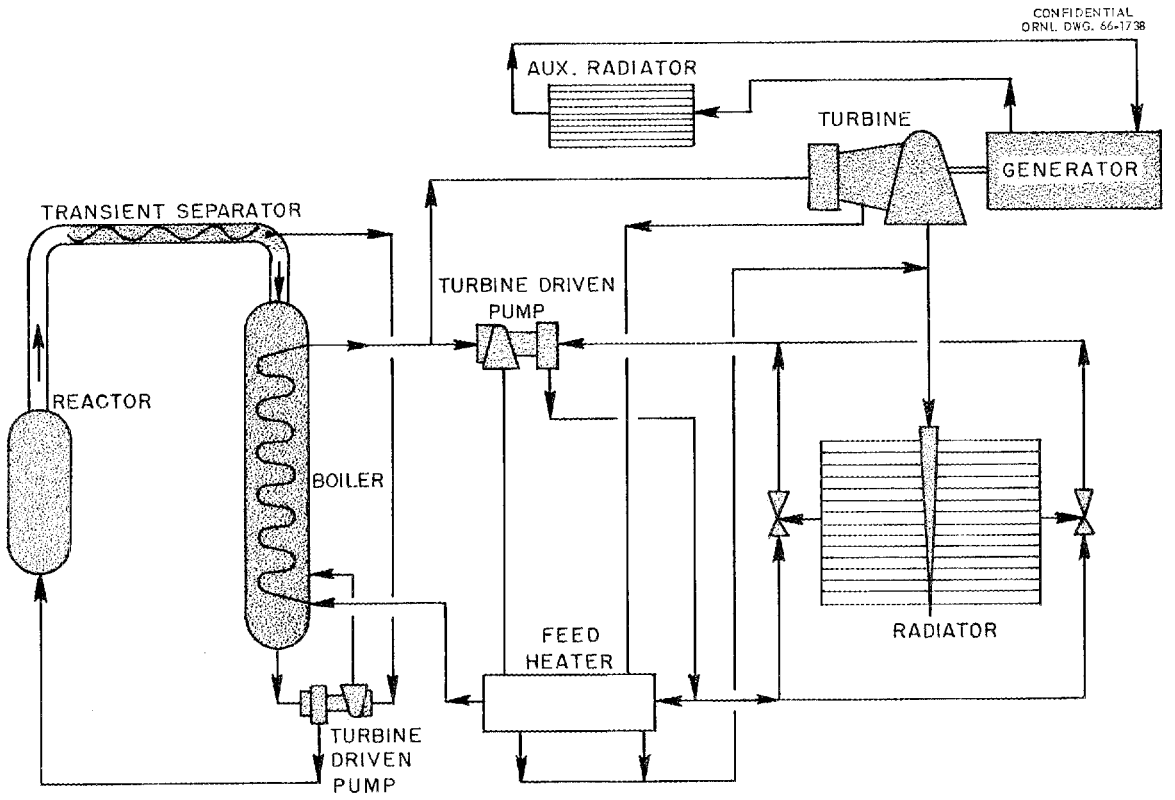

Figure 3. Two-loop system with a boiling reactor loop used to heat the boiler of the Rankine cycle loop containing a direct condensing radiator.

[redacted]

[redacted]

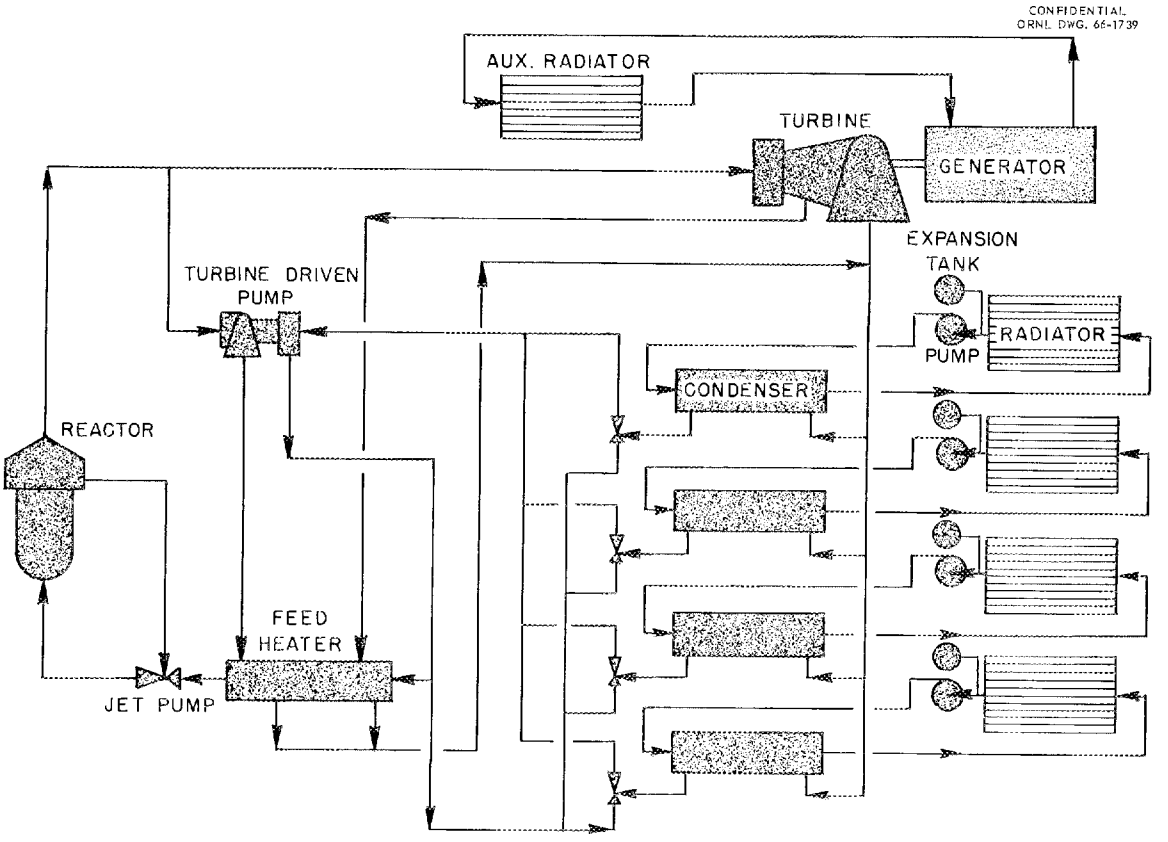

Figure 4. Two-loop system with a boiling reactor in the Rankine cycle loop coupled to a set of parallel indirect radiator loops.

[redacted]

[redacted]

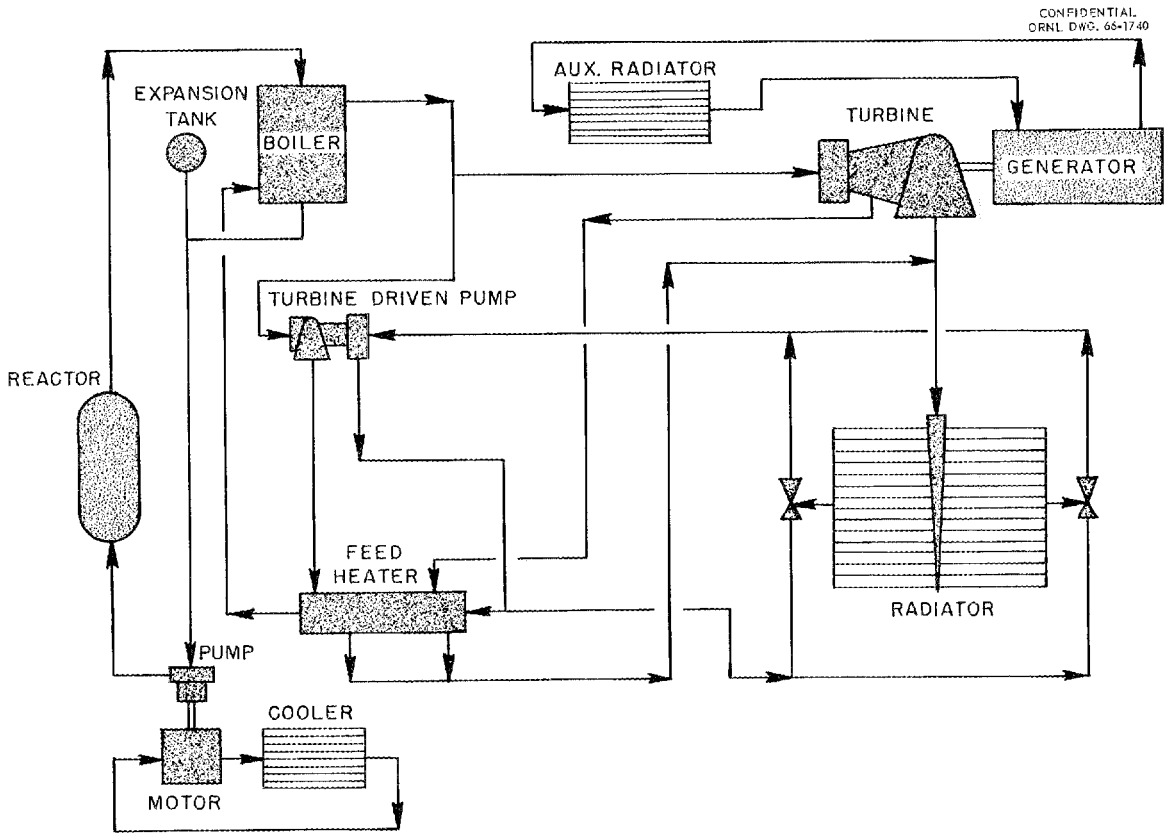

Figure 5. Two-loop system with a liquid-cooled reactor loop heating the boiling of a Rankine cycle loop containing a direct condensing radiator.

[redacted]

[redacted]

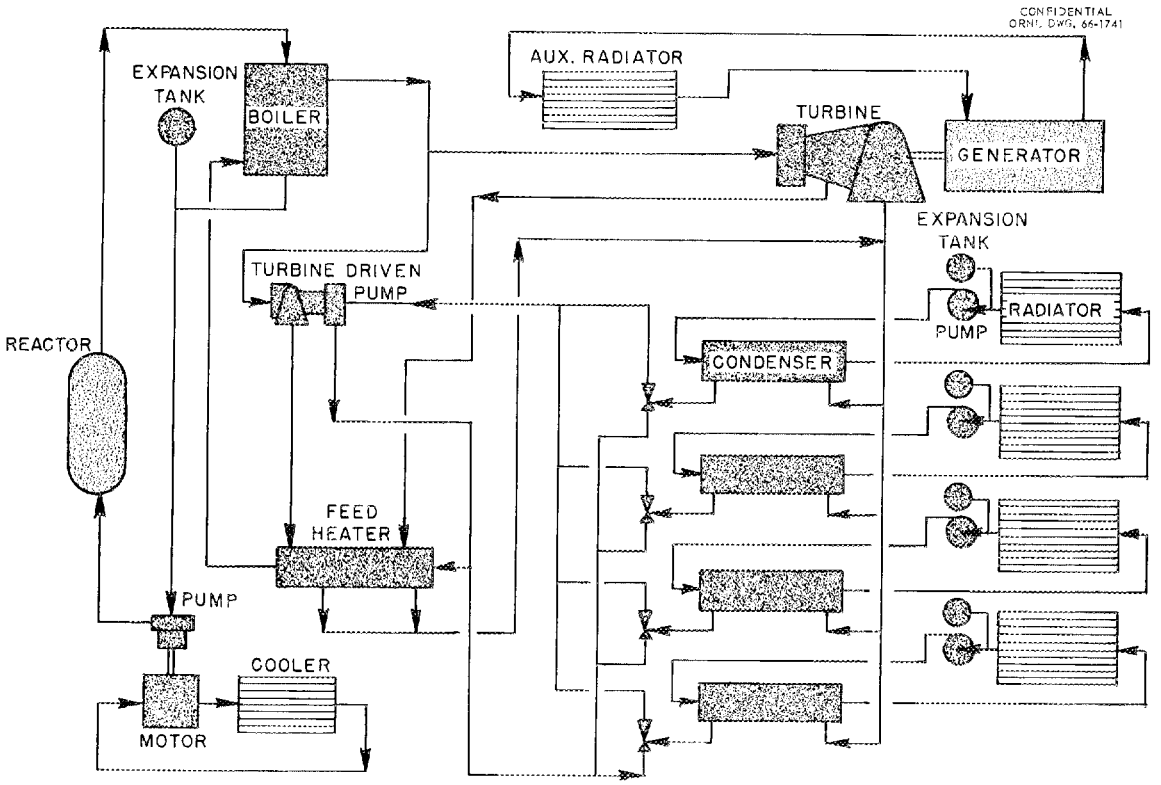

Figure 6. Three-loop system with a liquid-cooled reactor loop heating the boiler of a Rankine cycle loop coupled to a set of parallel indirect radiator loops.

[redacted]

single-loop system similar to the MPRE but with the vapor separator removed to a point outside the shield and the connecting piping arranged so that liquid from the vapor separator is recirculated by the feed pump instead of by jet pumps. The third is a 2-loop system in which a boiling potassium-cooled reactor is coupled to an intermediate heat exchanger that acts as a condenser for the primary system and the boiler of the secondary, or Rankine cycle system. The fourth system is another 2-loop system in which the boiling potassium reactor loop of the MPRE is coupled to a shell-and-tube condenser cooled by four independent NaK radiator circuits. The fifth, also a 2-loop system, is similar to the third system except that a liquid potassium-cooled reactor is used to heat a once-through boiler with the same sort of reactor cooling circuit as has been used in the SNAP-8 and SNAP-50 power plants. The sixth is a 3-loop system formed by combining the reactor circuit of Fig. 5 with the condenser circuit of Fig. 4.

The single-loop system of Fig. 2 differs from the MPRE in several important respects. Using the centrifugal feed pump to recirculate the liquid from the vapor separator entails some penalty in pumping power (although this is almost trivial if the boiler exit vapor quality is more than 40%). However, the extra pressure drop available can be used to increase the flow velocity and thus effect some reduction in reactor core size as well as to provide greater assurance of freedom from difficulties with boiling flow stability under zero-g conditions. Some complication of the plumbing is required, however, since the recirculated liquid is returned to the feed pump through a regenerative type of heat exchanger to avoid thermal stress problems. If, for example, the reactor exit vapor quality were 50%, the return liquid flow rate through the vapor separator to the feed pump would be equal to the flow rate of the feed stream from the condenser. Hence, the feed heater should be doubled in size and the flow from the boiler to the feed pump should move countercurrently through the regenerative feed heater. The regenerative arrangement is necessary since the feed pump would give serious difficulty with cavitation if the return stream from the vapor separator were not cooled. It would also be possible to make use of a two-stage pump, with one stage handling the cold stream from the condenser and the other stage recirculating the return

flow from the vapor separator. This approach would complicate the pump since it would require two impellers, but it would have the advantage that it would reduce the probability of mass transfer problems. On the other hand, it would have the disadvantage that it would increase the temperature difference between the various parts of the casing in the free-turbine-driven feed pump and hence would induce thermal stresses. Since it is believed that mass transfer would not be a problem in an all-niobium system, and since there is a strong incentive to minimize the complexity of the free-turbine-driven feed pump to increase its reliability, the arrangement of Fig. 2 was chosen for the second single-loop system of this study.

The 2-loop system of Fig. 3 appears to be both novel and attractive. It makes use of a boiling potassium-cooled reactor designed to deliver a very low vapor quality at the reactor outlet. A vapor separator designed to remove a small portion of the vapor would be used to supply vapor to a free-turbine-driven boiler recirculating pump which would recirculate the potassium in the primary circuit. Since the bulk of the heat transferred through the heat exchanger between the reactor circuit and the main Rankine cycle system would entail condensation on the high temperature side and boiling on the low temperature side, the entire boiler would operate at a nearly uniform temperature, and could be designed so that the temperature drop between the reactor core outlet and the turbine inlet could be kept to only about 50°F even for a design giving slightly superheated vapor to the turbine. Further, other advantages are that the recirculating pump in the primary circuit should have a substantially higher reliability than could be obtained with a canned rotor pump, the temperature loss between the boiler outlet and the turbine inlet can be kept to 100°F less than would be possible with a conventional liquid-cooled reactor circuit, and the mechanical pump would provide a relatively large pressure differential across the core to assure freedom from boiling flow stability problems under zero-g conditions. It has the disadvantages of somewhat greater weight and complexity than could be obtained with a single-loop system, but less than would be required if a liquid-cooled reactor were employed to avoid the possibility of fission products reaching the radiator where they might endanger a crew.

The 2-loop system of Fig. 4 is essentially similar to the MPRE system except that shell-and-tube condensers are employed instead of a cirect condenser. The four shell-and-tube condensers are connected to four independent radiator circuits employing NaK as the working fluid. This portion of the system is essentially similar to the corresponding portion of the 3-loop CANEL SNAP-50 system.[7]

The 2-loop system of Fig. 5 is essentially similar to the 2-loop system given serious consideration by CANEL.[6] The primary fluid is circulated through a liquid-cooled reactor by an electric motor-driven pump with a separate circuit to keep the windings of the motor cool. A once-through boiler designed for only a little superheating would supply vapor to the Rankine cycle system which has been taken as being identical with that planned for the MPRE system outside the reactor.

The system of Fig. 6 has the reactor circuit of Fig. 5 and the condenser circuits of Fig. 4 to yield a system quite similar to the 3-loop system laid out by CANEL on the SNAP-50 Program.

In all of these systems, it has been assumed that the generator coolant flow will be supplied by a centrifugal pump mounted on the generator shaft.

It should be noted that the control mode for the once-through boiler systems requires continuous operation of a throttling valve whereas no control valve is required for the recirculating boiler systems.

For comparison purposes, flow sheets for the SNAP-8 and the SNAP-50 systems are shown in Figs. 7, 8, and 9. These were chosen from Aerojet-General Corporation[9] and CANEL[7,8] reports.

Thermodynamic Cycle Calculations

Calculations for a set of thermodynamic cycles based on the conditions of Table 1 are summarized in Table 2 to show the effects of turbine inlet temperature, regenerative feed heating, and feed pump work on the thermodynamic cycle efficiency of the three basic cycles employed in the systems of Figs. 1 through 6. In addition, a set of calculations for the MPRE has been included for reference purposes. In all cases,

[redacted]

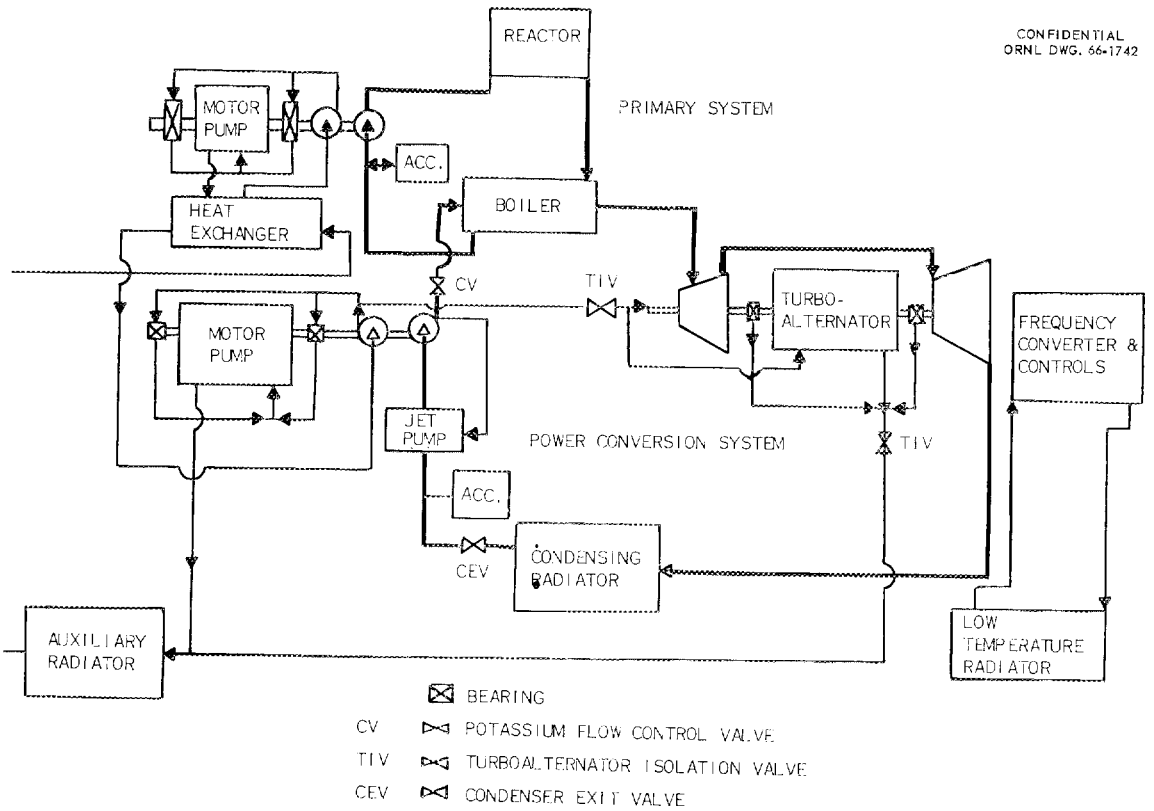

Figure 7. CANEL 2-loop system with a liquid-cooled reactor loop heating the boiler of a Rankine cycle loop with a direct condenser.

[redacted]

[redacted]

CONFIDENTIAL
ORNL-DWG. 66-1743

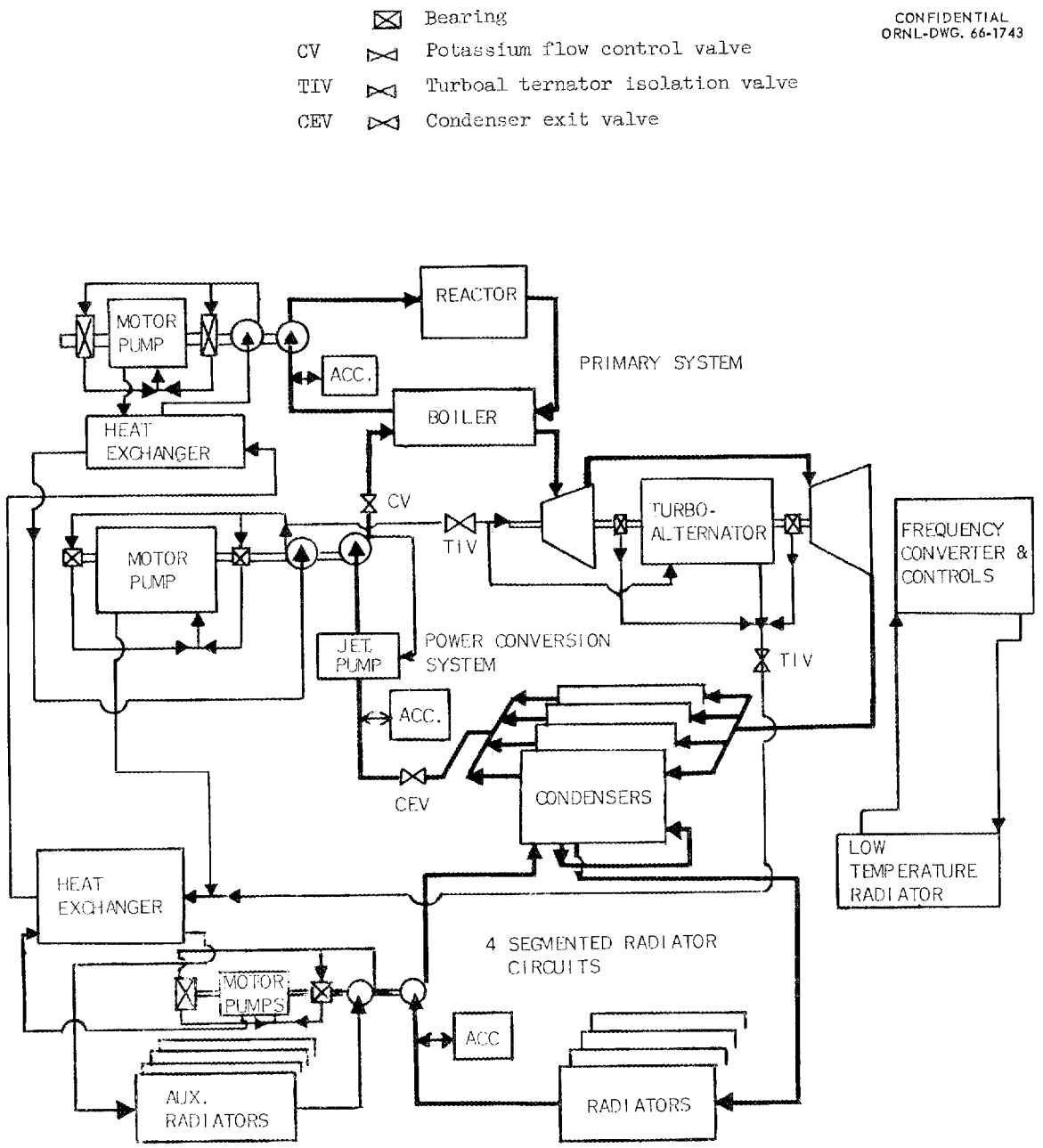

Figure 8. CANEL 3-loop system with a liquid-cooled reactor loop heating the boiler of a Rankine cycle loop coupled to a set of four indirect radiator loops.

[redacted]

[redacted]

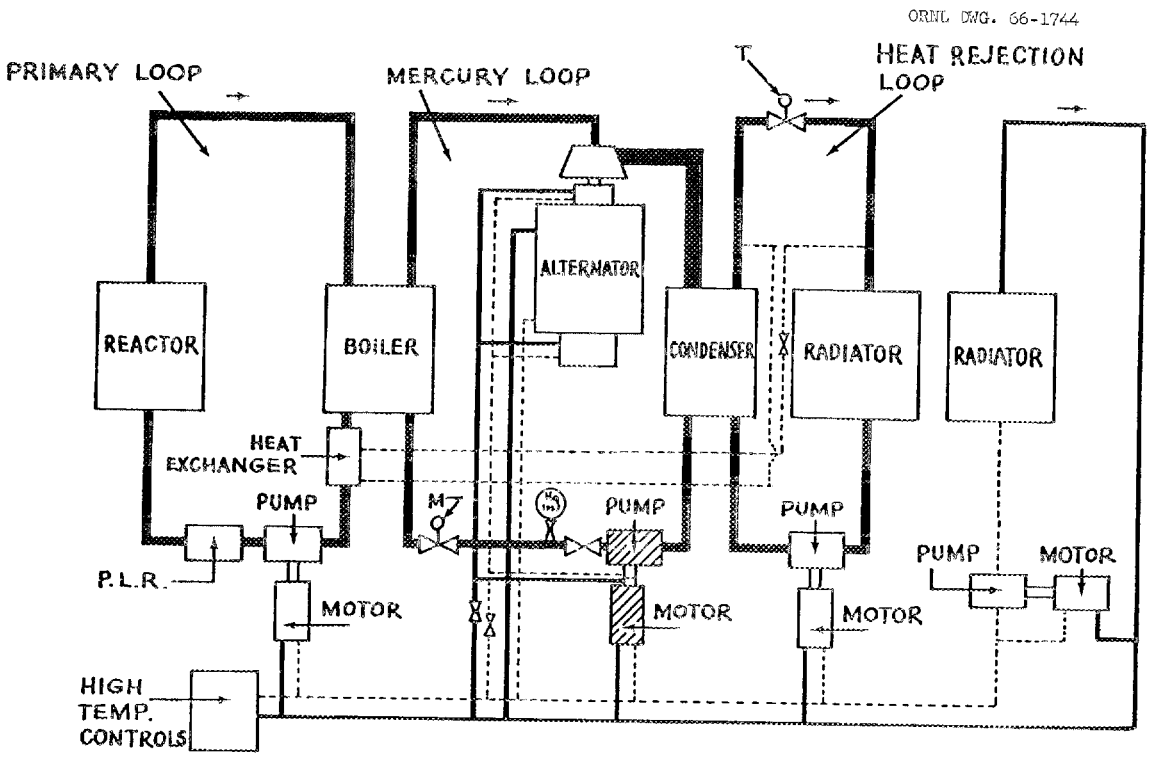

Figure 9. SNAP-8 system loop schematic showing location (crosshatching) of the mercury pump-motor assembly.

[redacted]

[redacted]

Table 2. Thermodynamic Cycle Calculations for Four Boiler Outlet Temperatures

Step Number	1	2	3	4	5	6	7	8	9
	T-°F	P-psia	H-Btu/lb	$\Delta H_{is.}$-Btu/lb	ΔH_{ac} (η_t=83%) -Btu/lb	ΔH with Regen. Btu/lb Vap. from Boiler -Btu/lb	Turbine Cycle Eff.-% (with regen. feed heating)	Overall Cycle Eff.-% ($\eta_{gen.}$ = 86%) (3% to F.P.)	Overall Cycle Eff.-% (No. regen.)
Boiler	2000	152	1223		759	759			
Turbine	1385	14	1023	200	166	153			
Condenser	1280	8.2		(83% qual.)→	717	597			
Feed Heater	1900				120	120	20.15	16.80	15.75
Boiler	1950	130	1221		766	766			
Turbine	1345	11.8	1020	201	167	154			
Condenser	1240	5.6		(83% qual.)→	723	606			
Feed Heater	1850				117	117	20.10	16.80	15.8
Boiler	1850	93	1217		783	783			
Turbine	1275	7.7	1012	205	170	158			
Condenser	1170	4.0		(83% qual.)→	732	620			
Feed Heater	1750				112	112	20.13	16.80	15.85
Boiler Turbine	1540	29.5	1204		835	835			
Turbine	1040	1.5	989	215	178	167			
Condenser	940			(83%-qual.)→	747	655			
Feed Heater	1440				92	92	20.0	16.7	16.0

[redacted]

the absolute temperature drop through the turbine was taken as one-quarter of the absolute temperature at the turbine inlet. Further, the pressure loss between the turbine outlet and the condenser inlet was taken as equivalent to a 5°F drop in the saturation temperature, and an extra enthalpy drop in the condenser equivalent to 100°F of sub-cooling of the liquid was included. In general, the calculations were consistent with the design precepts presented at the beginning of this report and summarized in Table 1.

The first two columns of Table 2 give the temperature and pressure at the outlet of each of the four major components in the system, i.e., the boiler, turbine, condenser, and feed heater. Column 3 gives the enthalpy at the beginning and end of an isentropic expansion between the boiler outlet and the turbine outlet pressure. This was determined from the Mollier diagram for potassium prepared by Naval Research Laboratories.[10] Column 4 gives the enthalpy change for the isentropic expansion of column 3, while column 5 gives the changes in enthalpy occurring in each component for each of the cycles assuming a turbine efficiency of 83%. (While not explicitly stated in CANEL Reports CNLM-6291,[5] CNLM-6292,[6] and CNLM-6293[7] of May 28, 1965, it can be deduced from these reports that the estimated turbine efficiency for the SNAP-50 systems was about 83.5%.)

Note that all of the values in column 5 are given in Btu per pound of vapor leaving the boiler. For example, since the vapor leaving the turbine has a quality of 83% in all four cycles, the enthalpy drop in the condenser in each case was taken as 83% of the heat of vaporization at the turbine outlet temperature plus 20 Btu to allow for 100°F of sub-cooling. Similarly, the enthalpy rise in the boiler was taken as the heat of vaporization at the boiler outlet pressure plus the heat required to raise the feed liquid from the feed heater outlet temperature to the boiler temperature.

A regenerative feed heater is advantageous for several reasons: 1) it will serve to reduce the size of the condenser by about 8%, 2) it reduces the thermal stresses in the region where the feed stream enters the boiler, and 3) it will reduce the tendency toward flow instabilities in the boiler. In carrying out the calculations made to allow for the effects of regenerative feed heating, it was assumed that there would be

four vapor bleed points from the main turbine, and that sufficient vapor would be bled from these points to raise the feed temperature to 100°F below the boiler temperature. A temperature difference of 50°F across the regenerative feed heater was assumed. The total vapor bleed flow fraction was taken as equal to the ratio of the enthalpy rise in the feed heater to the enthalpy drop for the condenser given in column 5. Since, on the average, half of the work that would be obtained if this vapor passed all the way through the turbine will be obtained from the fraction bled to the feed heater prior to the bleed point, the enthalpy drop in the turbine with regenerative feed heating was reduced by a factor equal to half of the bleed-flow fraction. To obtain the value given in column 6, the enthalpy drop in the condenser was also reduced by the enthalpy rise in the feed heater in going from column 5 to column 6.

In calculating the efficiency for just the thermodynamic cycle with regenerative feed heating, but with no allowance for the work required for the feed pump, the turbine cycle efficiency was obtained simply by dividing the enthalpy drop in the turbine as given in column 6 by the enthalpy rise in the boiler to give the values presented in column 7. The overall efficiency of the thermodynamic cycle without reference to possible pumping power requirements for other loops is given in column 8. This involves taking the turbine cycle efficiency of column 7, multiplying it by the generator efficiency of 86%, and dividing it by 1.03 to allow for the loss of vapor flow to a free-turbine-driven boiler feed pump. In practice, the vapor discharge from the boiler feed pump would go to the regenerative feed heater, so that it would reduce the amount of vapor bled from the main turbine, but no advantage was taken of this small factor in calculating the cycle efficiency. Several other small effects of this character were also neglected, e.g., the pumping power requirements for the jet pumps.

The overall cycle efficiency that would be obtained if a regenerative feed heater were not employed was calculated to give the values in column 9. The calculations were similar to those of columns 7 and 8 except that the gross turbine cycle efficiency was obtained by dividing the turbine enthalpy drop of column 5 by the sum of the enthalpy rises in the feed heater and the boiler as given in column 5. Note that the overall cycle

efficiency is about one percentage point lower without regenerative feed heating for a change of about 6%. A more important effect is that the heat load on the condenser is markedly reduced, as can be seen from the change in the enthalpy drop in the condenser. Of course, the latter change over-states the advantage of regenerative feed heating, since a correction must be applied to allow for the reduced enthalpy drop in the turbine that results from bleeding vapor to a regenerative feed heater. After allowing for this, it appears that use of regenerative feed heating will reduce the size of the condenser by about 8%.

The principal equations used in carrying out the calculations are summarized in Table 3. The effects of pumping power on the overall cycle efficiency of the various systems are discussed in a later section.

Table 3. Equations for Table 2

Column 5:

Boiler ΔH = (heat of vaporization) + (liquid c_p x 100)

Turbine $\Delta H = 0.83 \times \Delta H_{is}$

Condenser ΔH = (heat of vaporization at turbine outlet)(vapor quality for 83% turbine efficiency)

Column 6:

Vapor flow fraction to feed heater = $\Delta H_{\text{feed heater}} / \Delta H_{\text{condenser}}$

Turbine ΔH with feed heating = (turbine ΔH_{ac})[1 − 0.5 (vapor flow fraction to feed heater)]

Condenser ΔH with feed heating = (condenser ΔH of Col. 5) − (feed heater ΔH)

Column 7:

Turbine cycle efficiency with regenerative feed heating = (turbine ΔH)/(boiler ΔH)

Column 8:

Overall cycle efficiency with regenerative feed heating = $\frac{0.86}{1.03}$ (turbine cycle efficiency)

Column 9:

Overall cycle efficiency without regenerative feed heating = $\frac{0.86}{1.03} \frac{(\text{turbine } \Delta H \text{ of Col. } 5)}{(\text{boiler } \Delta H) + (\text{feed heater } \Delta H)}$

2. PROPORTIONS, SIZE, AND WEIGHT OF MAJOR COMPONENTS

This section is concerned with the estimation of the size and weight of each of the major components for the 1-, 2-, and 3-loop systems of Figs. 1 through 6 using a consistent set of design conditions, and using the results to estimate the effects of design power output on the size and weight of the integrated power plants. The component proportions have been developed from the thermodynamic cycle data of Table 2 in accordance with the design precepts set forth at the beginning of the preceding section. Weights for the radiators, boilers, and some of the other components have been estimated from design studies. Weights for the turbine-generator, electric motor driven pumps, accumulators, and certain other components were based on estimates given in CANEL reports. Scaling factors were used for the latter where there were significant differences in such parameters as the pumping horsepower.

Effects of System Choice on Radiator Size and Pumping Losses

The radiator deserves a great deal of attention in a study such as this because it is by far the largest component in the power plant, and largely determines the size and cost of the launch vehicle required. In comparing the relative radiator sizes and pumping losses for the 1-, 2-, and 3-loop systems of Figs. 1 through 6, it seemed best to take the 2-loop and 3-loop systems delineated in CANEL Reports CNLM-6291,[5] CNLM-6292,[6] and CNLM-6293[7] of May 28, 1965 as a point of departure. The reactor thermal power output was taken as 2.2 Mw in all cases (as in the CANEL reference designs), and the calculations were carried out following the design precepts outlined in Table 1. The calculations are intended to establish just how much the radiator size must increase as the mean effective radiator temperature drops with an increase in the number of loops. The increase in pumping losses can also be determined readily with a few additional calculations. The pumping losses affect the radiator size both because of their effects on cycle efficiency and their effects on the size of the auxiliary radiator required. The calculations are summarized in Table 4. A column for a scaled-up MPRE has also been included.

[redacted]

Table 4. Summary of Factors Affecting the Radiator Sizes and Pumping Losses for the Systems of Figs. 1 Through 6

(Data for two CANEL SNAP-50 systems and a scaled-up MPRE are also given.)

System	SNAP-50	SNAP-50		1	2	3	4	5	6
	2-Loop Direct Condenser	3-Loop Indirect Condenser	Scaled-Up MPRE	Single Loop with Boiler Jet Pump	Single Loop with Boiler Centrifugal Pump	2-Loop, Boiling Reactor, Direct Condenser	2-Loop, Boiling Reactor, Indirect Condenser	2-Loop, Liquid-cooled Reactor, Direct Condenser	3-Loop, Liquid-cooled Reactor, Indirect Condenser
Reactor outlet temp., °F	2000	2000	1540	2000	2000	2000	2000	2000	2000
Reactor inlet temp., °F	1900	1900	1520	1980	1980	1980	1980	1900	1900
Turbine inlet temp., °F	1850	1850	1540	2000	2000	1950	2000	1850	1850
Turbine outlet temp., °F	1274	1274	1040	1385	1385	1335	1385	1275	1275
Condenser inlet temp., °F	1254	1272	1040	1385	1385	1335	1385	1275	1275
Condenser outlet temp., °F	1090	1090	1030	1375	1375	1325	1375	1265	1265
Radiator inlet temp., °F	1254	1246	1040	1385	1385	1335	1350	1275	1240
Radiator outlet temp., °F	1090	1080	1030	1375	1375	1325	1190	1265	1080
Reactor power output, Mw	2.2	2.2	2.2	2.2	2.2	2.2	2.2	2.2	2.2
Overall cycle eff., %	14.6*	13.7*	16.7	16.8	16.6	16.8	16.8	16.1	15.3
Turbine eff., %	83.6*	83.6*	83	83	83	83	83	83	83
Generator eff., %	86	86	86	86	86	86	86	86	86
Generator gross output, kw	355	355	365	367	363	367	367	366	366
Generator net output, kw	322	302	365	367	363	367	348	336	317
Primary circuit overall pump efficiency, %	43.5	43.5	---	---	---	---	---	48	48
Primary circuit pump power, kw	11.05	11.05	---	---	---	---	---	30	30
Boiler feed pump overall eff., %	40	40	30	30	30	30	30	30	30
Boiler feed pump power, kw	11.26	11.26	---	---	---	---	---	---	---
Radiator circuit pump eff., %	---	36.5	---	---	---	---	36.5	---	36.5
Radiator circuit pump power, kw	---	19.2	---	---	---	---	19.2	---	19.2
Aux. radiator heat lead, kw	91.6	106.8	60	60	60	60	75	69	84
Aux. radiator inlet temp., °F	606	580	625	625	625	625	620	606	580
Aux. radiator outlet temp., °F	538	509	557	557	557	557	552	538	509
Power conv. rad. heat load, kw	3.6	4.6	0	0	0	0	1.8	2.8	4.6
Power conv. rad. temp., °F	200	200	---	---	---	---	200	200	200
Ideal black body Q/A for main rad., Btu/hr-ft^2	15,300*	11,780*	8,450	19,600	19,600	17,950	15,300	15,300	11,780
Relative size of main rad.	1.55*	2.15*	2.33	1.0	1.01	1.092	1.35	1.39	1.92
Ideal black body Q/A for aux., rad., Btu/hr-ft^2	1850*	1650*	2070	2070	2070	2070	1970	1850	1650
Aux. rad. rel. size	0.64*	0.89*	0.32	0.32	0.32	0.32	0.47	0.48	0.70
Ideal black body Q/A for power conv. rad., Btu/hr-ft^2	320*	320*	---	---	---	---	320	320	320
Power conversion rad. rel. size	0.146*	0.21*	---	---	---	---	0.08	0.13	0.21
Total rel. radiator area	2.34*	3.25*	2.65	1.32	1.33	1.41	1.90	2.00	2.83
Total radiator area, ft^2	908*	1260*	1130	563	567	600	810	853	1207
Radiator height, ft	32.1 (31.6)*	36.4 44.0	35.8	17.8	18.0	19.1	25.7	27.1	38.3

*Calculated for the SNAP-50 systems on the same bases as were used for the other six systems.

[redacted]

Relation to SNAP-50 Systems

The six systems of this study differed from the two SNAP-50 systems in five important respects: 1) they include regenerative feed heating, 2) the boiler feed pump was driven by a free turbine rather than by an electric motor, 3) the heat losses from the turbine to the generator were assumed to be somewhat lower for reasons which will be discussed later, 4) the efficiency of the SNAP-50 turbine was between 1/2% and 1% higher than for the reference design systems, and potassium rather than lithium was used as the reactor coolant. The principal data for the thermodynamic performance of the CANEL systems were taken from CANEL CNLM-6292[6] and CNLM-6293,[7] whereas that for the six systems of this study were taken from the thermodynamic cycle data of Table 2.

Calculational Procedure

Only a few elements in the calculations in the first portion of the table require any explanation. One of these is that, in system No. 3, the condenser for the free-turbine-driven pump in the reactor circuit would serve as an upper stage of the feed heater in the main thermodynamic cycle, and hence it would not represent a heat loss in the system. Thus data for the second thermodynamic cycle of Table 2 can be used without modification. A second point worthy of note is that the extra pump work required in system No. 2 as compared to system No. 1 was estimated to require a 4% rather than a 3% allowance for the vapor flow to the free-turbine-driven feed pump.

Auxiliary Radiator Heat Load

The auxiliary radiator heat load is somewhat lower in the 2-loop and 3-loop systems (Nos. 5 and 6) than in the corresponding SNAP-50 systems partly because the heat losses from the electric motor driven boiler feed pump are eliminated and partly because improved thermal isolation of the generator from the turbine appears to be both advantageous and possible, and has been assumed.

Relative Radiator Sizes

In calculating the relative radiator sizes, the ideal black-body heat flux was calculated for the operating temperature of each radiator using system No. 1, the MPRE single-loop system, for reference purposes, and assigning it a main radiator size of unity. The sizes of the radiators for the other systems were then calculated by taking the ratio of the ideal black-body heat flux for the radiator temperature of system No. 1 to the corresponding value for the system in question. Additional correction factors were applied using the values given in Table 2 for the enthalpy drop in the condenser and the useful work obtained from the turbine together with the ratio of the gross electrical output to the net electrical output as given in Table 4. (The equation used is given in Table 5.) Similarly, the relative size of the auxiliary radiator was calculated, again using the main radiator for system No. 1 as the reference size and assigning it a value of unity. Note that the auxiliary radiator for system No. 1 is 32% of the size of the main radiator — a rather surprisingly large value. It would have been even larger had the heat loss from the SNAP-50 generator been employed.

Radiator for Power Conversion Equipment

Virtually all of the output of the power conversion equipment in the two SNAP-50 systems goes to drive the electric motor driven pumps. Elimination of these pumps essentially eliminates the need for the power conversion system together with the radiator required to cool it. Thus systems No. 1 through 4 require no power conversion radiator.

Total Radiator Height

The total radiator surface area required for each of the various systems relative to the size of the main radiator for the single loop reference design boiling potassium reactor system is shown in the third from the last line of Table 4. The somewhat larger radiator sizes for the two SNAP-50 loops as compared to those for systems No. 5 and 6 of this study stem mainly from the lack of regenerative feed heating and a free-turbine-driven boiler feed pump in the SNAP-50 systems.

The last line of Table 4 gives the height of the full set of radiators required for each of the systems assuming that the radiators would be in the form of 10-ft-diam cylinders stacked one above the other. In estimating the radiator height, the radiator projected area required was calculated as indicated in Table 5 assuming the axially finned tube and reflector construction employed in the MPRE and discussed in detail in the next section. Note that the overall height of the radiator stack can be reduced by 2 1/2 ft by making use of a disc-shaped radiator surface across the one open end of the cylinder for a portion of the auxiliary radiator.

The values for the radiator heights of the CANEL 2-loop and 3-loop systems are 32.1 ft and 36.4 ft, respectively, whereas the design precepts used in this study led to values of 28.8 ft and 40 ft, respectively. A review of the calculations and the information available indicates that the basic fin-tube module must have been substantially different in the two CANEL designs, and that this gave widely different fin efficiencies.

Radiator Tube, Fin, and Armor Configurations

There now seems to be general agreement that the radiator of a nuclear space power plant should be designed to conform to the envelope of the launch vehicle and contribute to it structurally. This implies that it should be a cylindrical or conical shell with the tubes parallel to the axis. To simplify the comparisons a cylindrical construction has been assumed throughout for the purposes of this study.

Form of Meteoroid Armor

The three principal ways of arranging the tubes, fins, and armor that have been seriously considered in recent years are shown in Fig. 10. No meteoroid armor is required on the back sides of the tubes because the portion of the radiator on the opposite side coupled with closures at the ends will act as a bumper and protect it. A hypervelocity projectile is fragmented or vaporized in passing through even a thin sheet, and would be dispersed into a cloud by the time it had passed a foot or more beyond

Table 5. Equations Used in Preparing Table 4

$$\text{Rel. size of main radiator} = \frac{(Q/A)_1}{(Q/A)_n} \times \frac{(\Delta H\ \text{cond})_n}{(\Delta H_{cond})_1} \times \frac{(\Delta H_{tur})_1}{(\Delta H_{tur})_n} \times \left(\frac{\text{gross electrical output}}{\text{net electrical output}}\right)_n$$

$$\text{Rel. size of auxiliary radiator} = \frac{(Q/A)_1}{(Q/A)_{aux}} \times \frac{(\text{heat load})_{aux}}{(\text{heat load})_1} \times \frac{(\text{net output})_1}{(\text{net output})_n}$$

$$(\text{Main radiator heat load})_1 = \left(\frac{\Delta H_{cond}}{\Delta H_{boiler}}\right) 2.2 = 1735\ \text{kw}$$

$$\text{Radiator projected area required} = \frac{1735 \times 3413}{19{,}600 \times 0.83 \times 0.92 \times 0.93} = 426\ \text{ft}^2$$

For 10-ft-diam, height = 13.5 ft

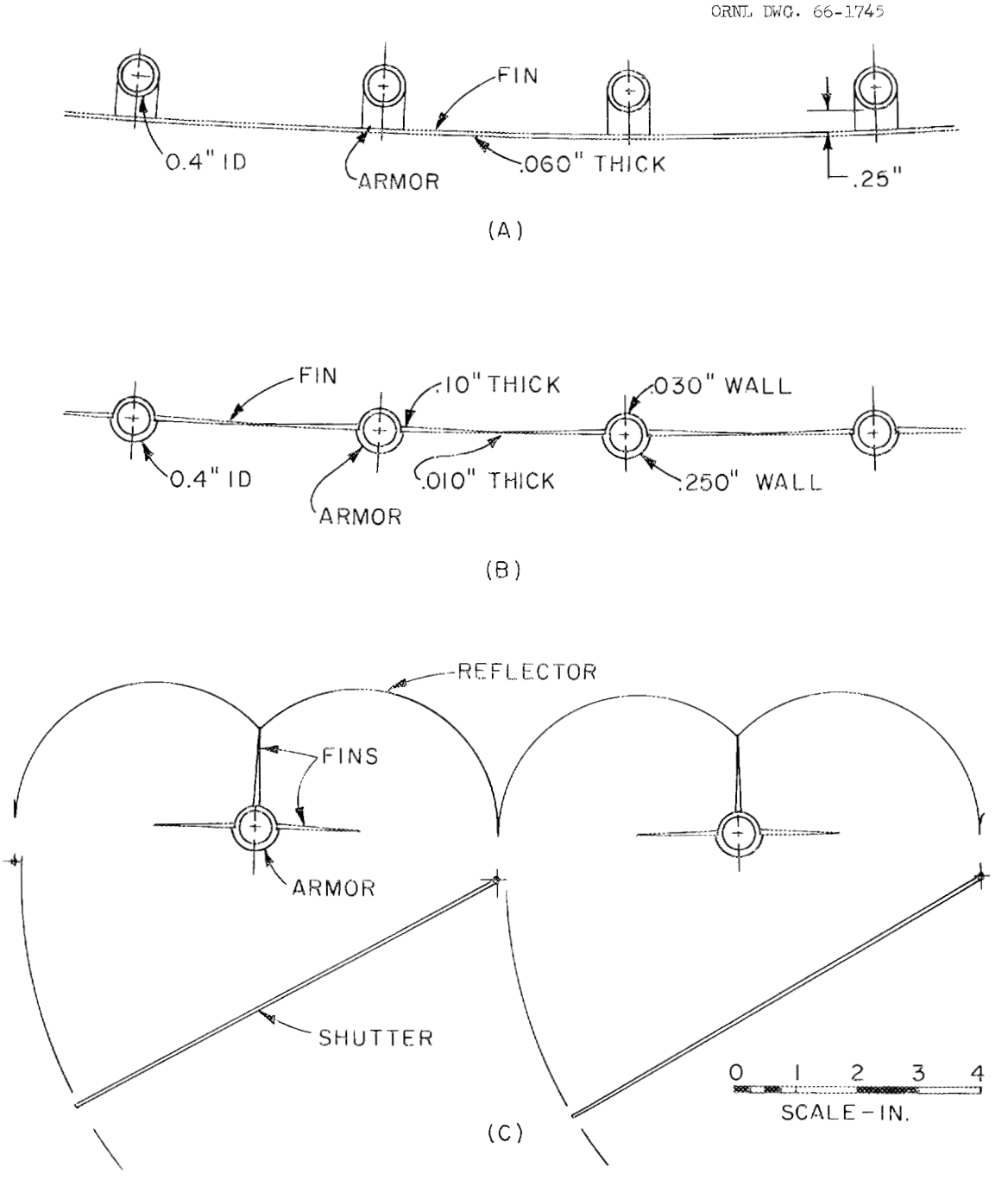

Figure 10. Three typical tube-fin-armor configurations for radiators for space vehicles.

a fin or reflector that would act in this fashion. While configuration A at the top has been used in many design studies, this meteoroid armor geometry provides only partial protection because the meteoroid flux is isotropic, and meteoroids are as likely to strike at an acute angle to the radiator surface as they are to come in normal to the radiator envelope. In the event of an oblique impact, the fin is too close to the tube to be very effective as a bumper. Further, the crater depth resulting from an impact is essentially independent of the angle of incidence down to angles of about 12 deg. In view of these factors, the geometry should be similar to that shown in configurations B or C.

Fabrication and Thermal Stress Problems

Configurations A and B have the advantage that they are conventional and, on the surface, are easy to analyze structurally. Actually, under operating conditions, deviations from ideality in the coolant flow and temperature distribution can lead to serious thermal stresses and warping. Further, large panels of this type are difficult to fabricate since they are difficult to jig, and small amounts of distortion during brazing will lead to a poor bond between the fins and the tubes.

Configuration C with the reflector is unconventional, but avoids the above problems. A unit of this type (10 ft in diam and 14 ft in height) has been built, and is shown in Fig. 11. The brazed joints are excellent, and the structure is clearly strong and stiff. Not only can good brazed joints be obtained, but tapered fins can be used readily, thus reducing the weight. The tubes are sufficiently flexible to accommodate differential thermal expansion by column buckling, yet stiff enough so that when bonded by polyurethane foam to the reflector and a windshield formed by closing the shutters they will form a strong, vibration-resistant structure for launching. The foam would vaporize during start-up in orbit.

Effects of Tube Spacing on Radiator Weight

The most important characteristic of configuration C, at the bottom of Fig. 10, is that it gives a much lower weight than the other two by making the rear surfaces of the fins nearly as effective as the front.

[redacted]

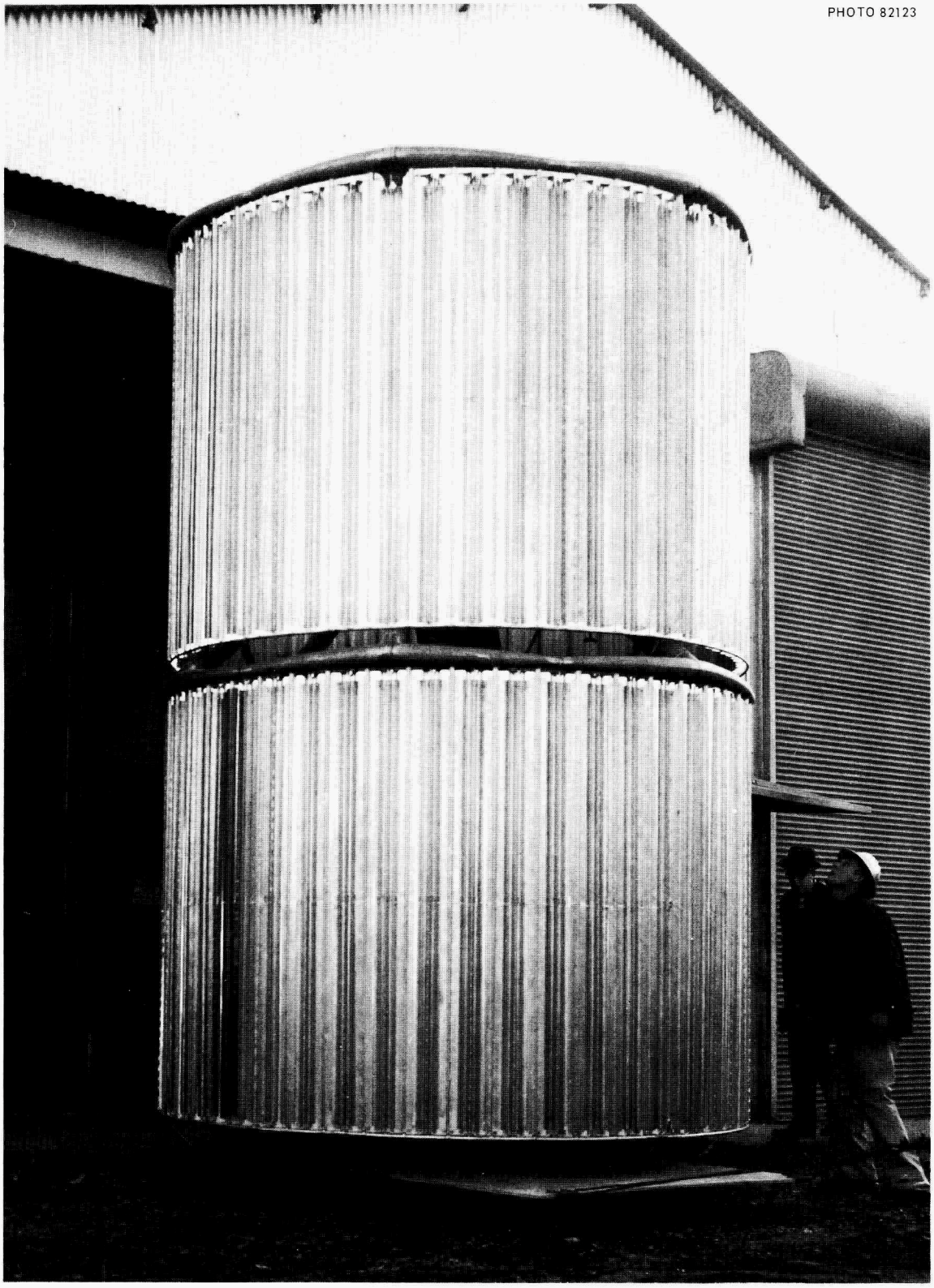

Figure 11. Full-scale MPRE radiator.

[redacted]

Since the fin weight varies as the square of the fin height for a given heat flux and fin efficiency, the fin and armor weight for a given tube diameter and tube spacing are much lower for the reflector arrangement than for the other two. Of course, the minimum value for the sum of fin and armor weights is obtained with a closer tube spacing for the upper two configurations of Fig. 10 than for that with the reflector. The effects of tube spacing on the weight of configurations B and C of Fig. 10 are shown in Fig. 12. Note that the minimum radiator surface weight obtainable with configuration C is about half that for configuration B. The calculations for Fig. 12 were made for the same heat flux from the radiator envelope, the same tube diameter, the same fluid temperature in the tubes, and the same probability for meteoroid penetration in both cases. The detailed calculations are summarized in Table 6. The reference design conditions were those for the radiator specified by the right column in Table 7.

Radiator Weight Estimates

In estimating the radiator weights for the systems of Figs. 1 through 6, the axially finned tube-and-reflector configuration of Fig. 10-c (that being tested extensively in the MPRE Program)[11] was used for both the direct condensing radiators and for the radiators in the liquid circuits for the indirect condensers and for the auxiliary coolers. Tapered tubes were employed for the direct condensing radiators, while straight tubes with a bore of 0.2 in. were employed for the all-liquid systems. While smaller tube diameters might have been used in the direct radiators at the expense of somewhat higher pressure drops and increased pumping power, there is little point in reducing the tube diameter below about 0.20 in. since the vulnerable area is a function of the tube OD and, for the smaller tube diameters, this is more a function of armor thickness than of the tube ID. NaK was the coolant assumed for the systems with indirect condensers and for the auxiliary coolers of systems 4 and 6; liquid potassium was assumed for the auxiliary radiators for systems 1, 2, 3, and 5. To simplify the analyses, the total fin span was held constant and the

[redacted]

ORNL DWG. 66-1746

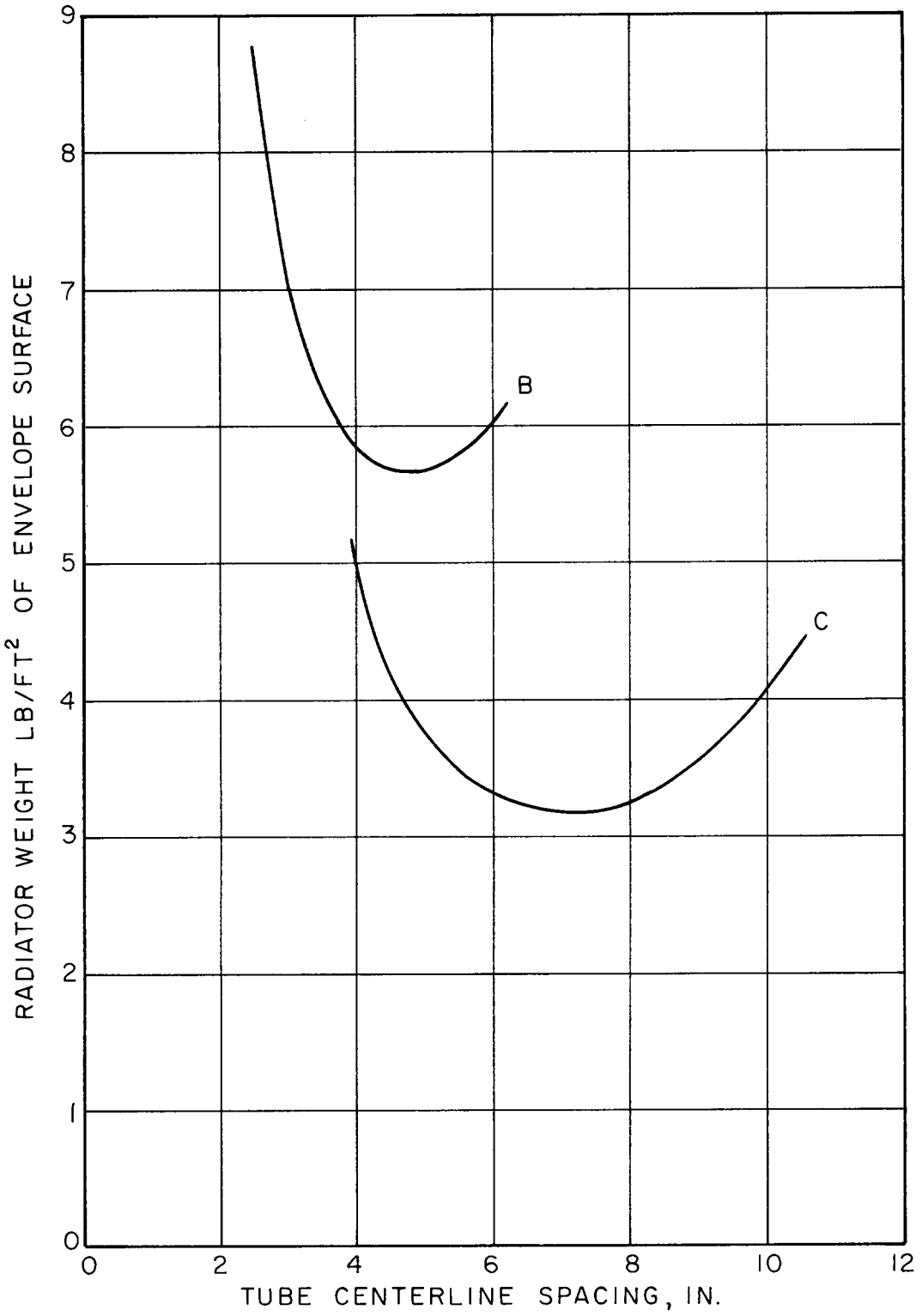

Figure 12. Effects of tube centerline spacing on the radiator weight per square foot of surface area of the radiator envelope.

[redacted]

[redacted]

Table 6. Effects of Tube Spacing on the Radiator Weight for Configurations B and C of Fig. 10

$T = 1380°F$; $\epsilon = 0.92$; Fin + tube efficiency = 0.773;

Tube ID = 0.38 in.; Fin $T = b\left(\frac{x}{w}\right)^2$ copper fins

Configuration B

Tube centerline spacing, in.	2.5	3.0	4.0	6.0
Relative vulnerable area	1.67	1.36	1.0	0.65
Armor thickness, in.	0.246	0.234	0.217	0.194
Armor weight, lb/ft	1.63	1.50	1.37	1.19
Armor weight, lb/ft^2 (total surface)	7.82	6.0	4.15	2.38
Fin height, in.	1.03	1.28	1.78	2.78
Fin efficiency, %	72.5	73.4	74.3	75.2
Fin root thickness, in.	0.027	0.044	0.090	0.228
Fin weight, lb/ft^2 (total surface)	0.572	0.83	1.48	3.5
Weight of rear portion of tubes, lb/ft^2	0.36	0.28	0.21	0.14
Total weight, lb/ft^2	8.75	7.1	5.84	6.02

Configuration C

Tube centerline spacing, in.	4.0	6.0	8.0	10.0
Relative vulnerable area	1.0	0.65	0.46	0.35
Armor thickness, in.	0.217	0.194	0.176	0.166
Armor weight, lb/ft	1.37	1.19	1.03	0.96
Armor weight, lb/ft^2 (total surface)	4.15	2.38	1.54	1.20
Fin height, in.	0.615	1.03	1.45	1.86
Fin efficiency, %	76.8	79.3	80.0	81.2
Fin root thickness, in.	0.025	0.082	0.173	0.306
Fin weight, lb/ft^2 (total surface)	0.67	0.80	1.60	2.79
Weight of rear portion of tubes, lb/ft^2	0.21	0.14	0.10	0.08
Total weight, lb/ft^2	5.03	3.32	3.24	4.07

[redacted]

[redacted]

Table 7. Performance, Dimensional, and Weight Data for Typical Condensing Radiators for Launch Packages

Power plant	MPRE	System 1 of Table 4
Power to be dissipated, kw	860	1735
Power to be dissipated, Btu/hr	2.93×10^6	5.93×10^6
Vapor temperature, °R	1500	1840
Ideal dissipation to 520°R sink, Btu/hr.ft^2	8560	19,600
Emissivity of treated surface	0.92	0.92
Fin efficiency	0.86	0.80
Effectiveness of tube plus fin	0.89	0.83
Reflector efficiency	0.87	0.87
Area required, ft^2	435	426
Height of cylinder for 10-ft-diam vehicle, ft	14.0	13.6
Tube length, ft	7.0	6.8
Vapor density, lb/ft^3	0.0035	0.029
Latent heat of vaporization, Btu/lb	887	843
Vapor quality, %	91.7	93
Potassium flow rate, lb/sec	1.0	2.1
Vapor volume flow rate, ft^3	262	67.3
Vapor velocity at tube inlet, ft/sec	400	400
Vapor flow passage area at tube inlets, ft^2	0.655	0.168
Number of tubes	96	96
Tube inlet flow passage area per tube, ft^2	0.0068	0.00175
Tube inlet ID, in.	1.1	0.56
Liquid density at tube outlet, lb/ft^3	44.0	41.7
Tube outlet liquid flow rate, ft^3/sec	0.0228	0.0504
Tube outlet ID, in.	0.30	0.30
Tube outlet area (per tube), ft^2	0.0049	0.0049

[redacted]

[redacted]

Table 7. (continued)

Tube outlet area (total), ft^2	0.060		0.060
Tube outlet velocity, ft/sec (for liquid)	0.38		0.84
Fin span, in.	3.2		3.2
Fin cross-section shape	$t = b(x/w)^2$		$t = b(x/w)^2$
$0.408\ w\sqrt{h/kb}$ for given fin efficiency	0.46		0.58
Equivalent heat-transfer coefficient, Btu/hr.ft^2.°F	20.0		42
Mean fin height, in.	1.2		1.3
Fin root thickness, in.	0.092		0.155
Total length of tubing			
Main radiator, ft	672		650
Auxiliary radiator, ft	---		190
Vulnerable surface area			
Main radiator tubes, ft^2	50	43.5	
Auxiliary radiator tubes, ft^2	---	9.5	
Ring manifolds, ft^2	20	15	
Total, ft^2	70	68	
Probability of meteoroid penetration	0.01	0.010	0.001
Thickness of stainless steel required, in.	0.1	0.100	0.176
Armor weight, main radiator tubes, lb	250	180	360
Auxiliary radiator tubes, (0.2 in. ID), lb	---	30	60
Manifolds, lb	100	60	110
Total, lb	350	270	530
Weight of copper fins, lb	290	470	470
Weight of 0.010-in.-thick aluminum reflector, lb	100	100	100
Weight of 0.030-in.-wall tapered stainless steel tubes, lb (unarmored portion)	80	50	50

[redacted]

Table 7. (continued)

Weight of radial vapor ducts 5.2 ft long, 0.040 in. thick, lb	95	50	50
Weight of ring manifolds (unarmored portion), lb	35	20	20
Weight of inlet duct and hub, lb	50	30	30
Weight of 0.010-in.-thick aluminum shutters with operators, lb	100	100	100
Weight of 1.5-lb/ft^3 polyurethene foam, lb	100	100	100
Launch weight of main radiator, lb	1200	1160	1390
Net weight of main radiator after vaporizing polyurethane, lb	1100	1060	1290
Area of auxiliary radiator, ft^2	---	136	136
Launch weight of auxiliary radiator, lb	---	274	304

fin height allowed to vary with the tube diameter. This led to variations in the fin height of only about ±0.15 in. Figure 10 indicates that this falls in the region in which the overall radiator weight is close to a minimum and is not very sensitive to variations in the fin height. To facilitate brazing, copper fins were used, and – to minimize the fin weight – the fin thickness was assumed to vary inversely as the square of the distance from the fin root.

Effects of Vapor Density

The vapor density entering the radiator is a major factor in determining not only the manifold size but the tube length-diameter ratio. In going from a radiator inlet temperature of 1040°F for the 1 Mw stainless steel MPRE system to 1380°F for the refractory metal systems, the density of the potassium vapor entering the condenser increases from 0.0035 to 0.029 lb/ft^3, i.e., by a factor of 8.3. For the same velocity and power, the duct size can be reduced by the factor $\sqrt{8.3} = 2.88$. For the same fin span as employed in the MPRE radiator tubes, at a radiator temperature of 1380°F the heat loading per foot of length would be increased by a factor of 2.32. Thus in proportioning the radiator tubes, the tube length for the same inlet diameter can be increased by the factor 8.3 divided by 2.32 equals 3.58. Thus a tube length of 25 ft could be employed at the higher temperature for the same tube inlet diameter, or the tube diameter could be reduced. Reducing the tube diameter would reduce the area vulnerable to penetration by meteoroids, but this would be partially offset by some increase in the number of manifolds required for the shorter tubes, and hence in their vulnerable area.

Detailed Calculations

In making a detailed weight estimate for the radiator for system 1, a set of calculations similar to those carried out for the MPRE radiator was prepared. Table 7 shows these calculations together with the corresponding values for the MPRE radiator for comparison purposes. Note that it was decided to base the meteoroid armor thickness required on the combined vulnerable surface area of the main and auxiliary radiators.

Note that when a 1380°F main radiator is employed with a 600°F auxiliary radiator, the auxiliary radiator comes to represent about 30% of the total radiator surface area instead of only about 10% as is the case if the main radiator temperature is 1040°F. Allowances for the auxiliary radiator were not made in the calculations for the meteoroid armor thickness for the MPRE, since it represented a relatively small secondary effect which was not important in the original work.

Manifold and Duct Weight

The manifold and duct weight constitute a substantial fraction of the total radiator weight, and hence should be estimated with allowances for the effects of vapor density as indicated in the previous section. In calculating the manifold weights for the NaK radiators of the indirect systems, the manifolds and pipes were designed for a NaK velocity of 14 ft/sec to keep the pressure loss in the ducts and manifolds to about 10 psi. This gave radial duct and ring manifold diameters of about 1 in. The manifold rings were made uniform in diameter all around the perimeter of the radiator envelope because, while fluid pressure drop considerations would have permitted tapering to a smaller diameter at the midpoints between the radial ducts, the structural strength of the assembly would have been seriously reduced. Extra weight in auxiliary structure would then have been required so that little, if any, savings in overall weight would have resulted. The smaller size of the liquid manifolds led to a 12% reduction in the weight and vulnerable surface area of the ring manifolds for the NaK radiators relative to direct condensers for the same output. Reducing the tube diameter led to a reduction in tube and armor weight for the NaK radiators. The smaller tubes gave an increased fin height which tended to increase the fin weight, but this was more than offset by the reduction in fin thickness associated with the lower heat flux. Structural considerations make it inadvisable to reduce the fin thickness too far, hence the radiator weight without armor was estimated to be 90% of the main radiator weight per unit of area.

Meteoroid Armor Thickness

Several different approaches to the estimation of the thickness of armor required to protect from meteoroids have been employed. The method used for MPRE work has been based on information presented in Refs. 11 and 12 as outlined in Ref. 13. This method was chosen for the purposes of this study, and the chart of Fig. 13 was prepared. The values given by this chart are within 14% of those given by the most recent relations developed by the NASA Lewis Laboratory.* The values are also within 20% of the values used by CANEL in their SNAP-50 work (see CNLM-6293, p. 6-3-1) and for the SNAP-8 system (see NASA Specification No. 417-5). The meteoroid armor was assumed to be integral with the tube wall and extend around 180 deg of the tube perimeter. Figure 14 gives the weight of thick-walled tubing as functions of the ID and wall thickness. The weight of the armor was taken simply as half of the value given in Fig. 14 for a tube of a given ID and having a thickness equal to that of the armor required. Values for the weight of the unarmored rear half of the tube are also included in Table 7.

Radiator Weight

Analyses indicated that, except for the weight of the armor, the radiator weight is directly proportional to the projected area. On this basis, the weight estimates of Table 7 were extended and Table 8 was prepared to summarize the radiator weight calculations for systems No. 1 through 6. Values for the relative main radiator size, relative auxiliary radiator size, and total radiator area were taken from Table 4 and then corrections were made to the weight for the tube diameter. The vulnerable area was taken as being $\pi/2$ times the OD of the armored portion of the tube multiplied by the total number of feet of tubing. The armor thickness was determined first, and then its weight. The detailed expressions used in the calculations are shown in Table 9.

---

*As indicated by personal discussions with S. Lieblein, J. Loeffler, and N. Clough in December 1965.

[redacted]

ORNL DWG. 66-1747

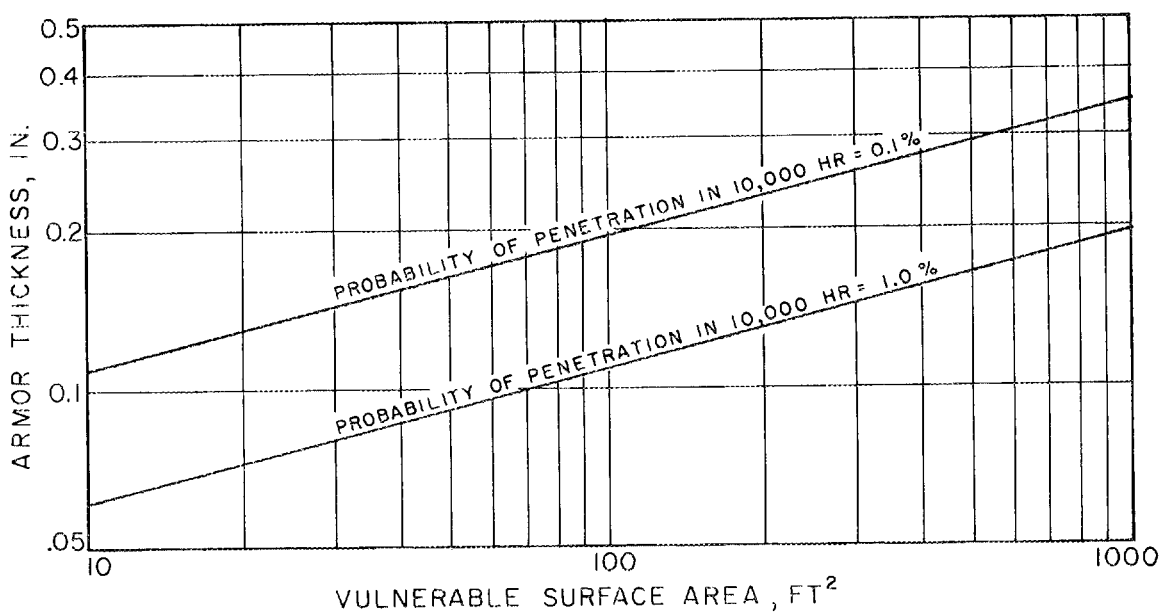

Figure 13. Effects of vulnerable surface area on the meteoroid armor thickness required for stainless steel radiators.

[redacted]

[redacted]

ORNL DWG. 66-1748

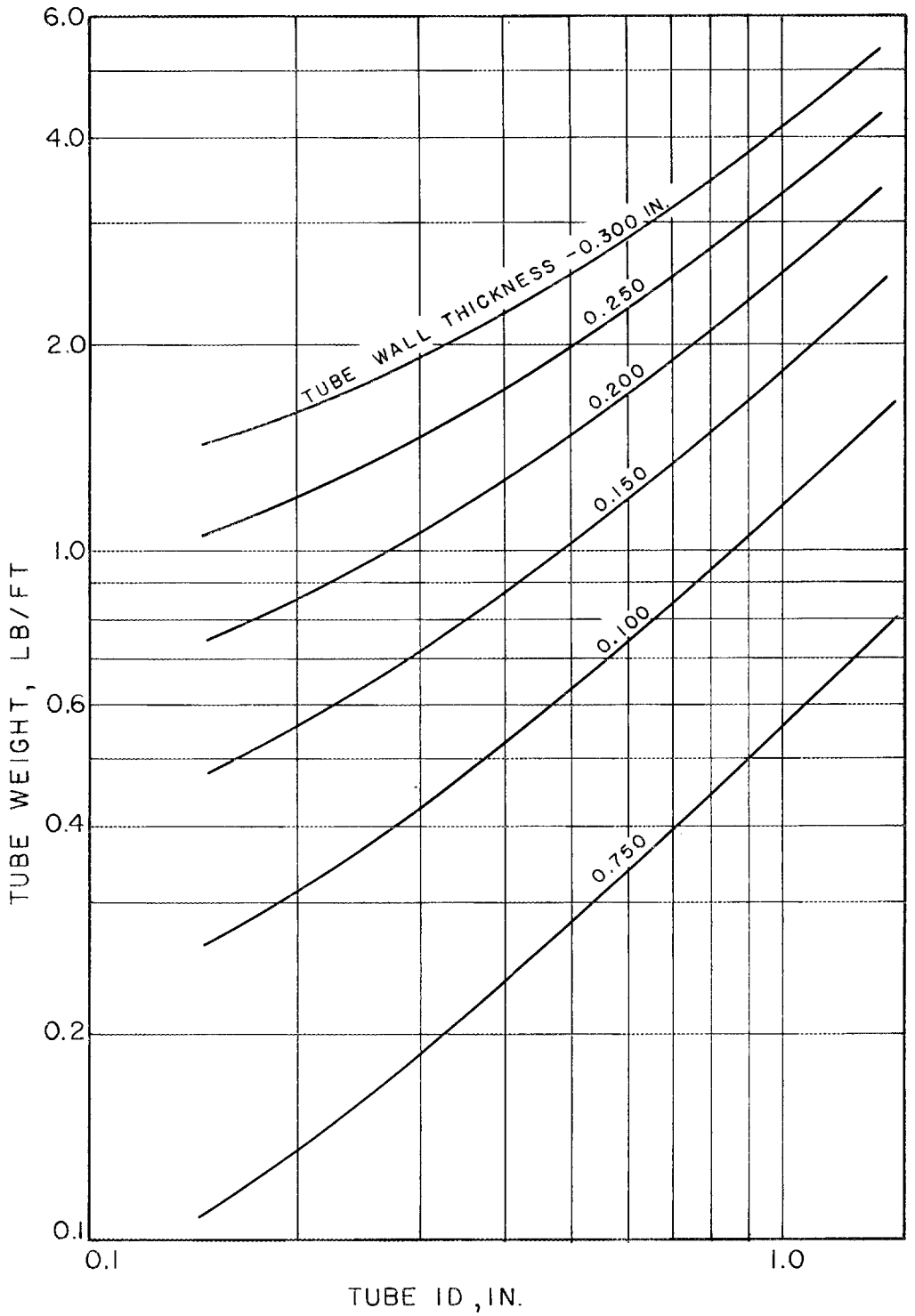

Figure 14. Weight of thick-walled stainless steel tubing.

[redacted]

Table 8. Calculations for the Meteoroid Armor Weight

System	1		2		3		4			5		6		
	Single Loop with Boiler Jet Pump		Single Loop with Boiler Centrifugal Pump		2-Loop Boiling Reactor, Direct Condenser		2-Loop Boiling Reactor, Indirect Condenser			2-Loop Liquid-Cooled Reactor, Direct Condenser		3-Loop Liquid-Cooled Reactor, Indirect Condenser		
Probability of Penetration in 10,000 hr	0.01	0.001	0.01	0.001	0.01	0.001	0.1	0.01	0.001	0.1	0.001	0.1	0.01	0.001
Relative main radiator size	1.00		1.01		1.092		1.35			1.39		1.92		
Relative auxiliary radiator size	0.32		0.32		0.32		0.55			0.61		0.91		
Total radiator relative area	1.32		1.33		1.41		1.90			2.00		2.83		
Total radiator area, ft^2	563		567		600		810			853		1207		
Meteoroid armor thickness, in.	0.10	0.176	0.10	0.177	0.101	0.180	0.061	0.109	0.194	0.107	0.192	0.066	0.118	0.210
Meteoroid armor weight, main	240	470	242	473	265	525	63	210	420	356	712	183	325	642
Meteoroid armor weight, auxiliary	30	60	30	60	30	61	32	57	119	64	139	61	108	218
Main radiator (except armor and radial ducts), lb	840	840	846	846	916	916	1132	1132	1132	1108	1108	1520	1520	1520
Total main radiator (except radial ducts), lb	1080	1310	1088	1319	1181	1441	1195	1342	1552	1464	1820	1703	1845	2162
Auxiliary radiator (except armor), lb	244	244	244	244	244	244	438	438	438	387	387	624	624	624
Total auxiliary radiator, lb	274	304	274	304	274	305	470	495	557	451	526	685	732	842
Total radiator weight (except radial ducts), lb	1354	1614	1362	1323	1455	1746	1665	1837	2109	1915	2346	2388	2577	3004
Weight of radial ducts and hub, lb	80	80	80	80	85	85	49	49	49	96	96	60	60	60
Total radiator weight with ducts and hub, lb	1434	1694	1442	1703	1540	1831	1714	1886	2158	2011	2442	2448	2637	3064

Table 9. Relations Used in Calculating Table 8

Armor thickness taken from Fig. 13 for a vulnerable area = 68 (Rel. area)
Armor weight in pounds per foot of tube is half of the value for the weight of thick-walled tubes given in Fig. 14
Meteoroid armor weight = 650 (Rel. area) (Armor wt., lb/ft)
Main radiator weight (except armor and ducts) = 840 (Rel. area)
Auxillary radiator weight (except armor) = 760 (Rel. area)
Weight of ducts and hub (condensing radiator) = 80 (Rel. area)
Weight of ducts and hub (indirect radiator) = 36 (Rel. area)

Auxiliary Radiator Construction

While a somewhat lighter construction might have been employed for the auxiliary radiators because of their lower temperatures, this would have been likely to lead to complications including a requirement for additional structure so that the savings in net overall weight including structure would probably have been minor, and hence a refinement such as this was not made. For example, if aluminum fins were employed for the auxiliary radiator of system No. 1, a savings of approximately 40 lb might have been effected at the price of a much more difficult fabrication problem (it is very hard to obtain a sound brazed joint between aluminum and stainless steel). Further, differential thermal expansion between the two materials would be likely to lead to bowing of the tubes and possibly other damage.

Effects of Power on the Proportions of Direct Condensing Radiators

The effects of reactor design output on the size of the principal elements of direct condensing radiators for the single-loop system of Fig. 1 were estimated for three representative reactor outputs and the results are summarized in Table 10. Cylindrical banks of tubes were assumed in all cases so that the vapor manifolds would be essentially similar. While two banks of tubes could be used for the 25 Mw(t) size, the resulting tube inlet diameter of 1.1 in. is a bit large and would nearly double the weight of the meteoroid armor as compared with a configuration employing four instead of two banks of tubes. As a consequence, a second case was worked out for a four bank tube array.

Shell-and-Tube Condensers

A good set of proportions for shell and tube condensers for systems with separate NaK radiator circuits appears to be given by using tapered tubes similar to those of the direct condensing radiators described above. The smaller the tube diameter, the smaller and lighter the condenser but the greater the number of tube-to-header joints. A good compromise that

Table 10. Proportions for a Series of Direct Condensing Radiators

	Reactor Power, Mw (t)				
	2.2	5	10	25	25
Radiator inlet temperature, °F	1,380	1,380	1,380	1,380	1,380
Potassium vapor density, lb/ft^3	0.029	0.029	0.029	0.029	0.029
Tube inlet ID, in.	0.56	0.68	0.78	1.1	0.78
Tube outlet ID, in.	0.30	0.30	0.30	0.4	0.30
Tube length, ft	6.8	9.6	12	24	12
Radiator diameter, ft	10.0	15.3	26.5	33	33
Radiator height, ft	13.6	19.2	24	48	48
Number of radial ducts	12	12	24	24	48
Radial duct diameter, in.	1.85	3.1	4.3	6	4.3
Mean tube OD, in.	0.44	0.55	0.60	0.8	0.6
Reflector span, in.	7.75	7.13	7.25	7.75	7.75
Number of tubes	96	161	280	312	624

gives reasonably sturdy tubes is given by a tube inlet ID of 0.50 in. with a taper ratio of 3 (for the inside diameter). The average condensing heat transfer coefficient was taken as 6000 Btu/hr-ft^2-°F. The tube wall thickness was taken as 0.030 in. to give a unit of high integrity. These parameters yield an overall heat transfer coefficient of 2500 Btu/hr-ft^2-°F and a heat flux of 200,000 Btu/hr-ft^2. The temperature rise in the NaK in passing through the shell-and-tube heat exchanger was taken as 160°F in keeping with the values used by CANEL for the SNAP-50 system. In establishing the diameter of the heat exchanger shells, the spacing between the tubes was made 1/8 in. to give sufficient ligament thickness between holes in the header sheets to provide good conditions for welding. In view of the low pressures and temperatures in the heat exchanger, the shell wall thickness was made 0.10 in. in the units for the 25 Mw(t) reactors, and 0.060 in. in the smaller units. Dimensional and weight data for a series of typical units are presented in Table 11.

Table 11. Shell-and-Tube Condensers

	Reactor Power, Mw(t)			
	1	2.3	5	25
Surface heat flux, Btu/hr-ft^2	120,000	200,000	200,000	200,000
Potassium vapor temp., °F	1040	1380	1380	1380
Potassium vapor density, lb/ft^3	0.0035	0.029	0.029	0.029
Tube inlet ID, in.	0.60	0.60	0.60	0.60
Tube length, ft	2.0	3.3	3.3	3.3
Number of condensers	4	4	4	4
Number of tubes per condenser	189	53	114	570
Shell diam at vapor inlet, in.	13	7.5	10.5	22.0
Shell diam at condensate outlet, in.	6.5	4	5.5	11
Shell thickness, in.	0.060	0.060	0.060	0.100
NaK inlet temperature, °F	850	1190	1190	1190
NaK outlet temperature, °F	1010	1350	1350	1350
Condenser wt. (dry), lb/unit	80	50	100	500

Boilers

In designing a boiler for the 2-loop boiling reactor system of Fig. 3, an effort was made to make the boiler an integral part of the shield so that the mass of metal in the tubes and casing would also serve as gamma shielding. This led to the compact layout of Fig. 15 which has the further advantage that fission products from a leaking fuel element would be kept within the shield. To inhibit the production of secondary gammas in the metal of the boiler, neutron shielding with sufficient boron absorber to capture the slowed down neutrons has been provided between the reactor and the boiler to reduce the secondary gamma production to an acceptable level. The boiler itself was designed with tapered tubes similar to those employed in the shell-and-tube condensers, but with two-thirds of their length. The tapered tubes reduce the boiler tube length as well as both the two-phase pressure drop in the boiler tubes and the tendency toward droplet entrainment, and the taper should improve the boiling flow stability characteristics. The liquid manifold shown is a 40-in.-diam ring at the outer perimeter, while the vapor manifold is a truncated cone at the center. The tube spacing and arrangement are such that the shell-side flow passage area and the passage equivalent diameter become less at the outer perimeter so that under zero-g conditions capillary forces would tend to draw the condensate toward the outer perimeter. The tubes are bent to form a spiral, so that their length would be about double the radial distance between the liquid and vapor manifolds. All of the tubes would be the same length. The free-turbine-driven boiler recirculating pump would be supplied with vapor taken from the space just beneath the center of the conical vapor manifold. The shielding plugs between the reactor and the boiler would be formed in such a way that they would also act as a vapor separator so that the bulk of the liquid leaving the reactor would be skimmed off and collected in catcher annulii from which it would be circulated directly to the pump, thus reducing the two-phase pressure drop on the shell-side of the boiler tubes. If desired, orifices could be installed in the boiler tubes immediately downstream of the liquid manifold to stabilize the flow under boiling conditions and to serve as

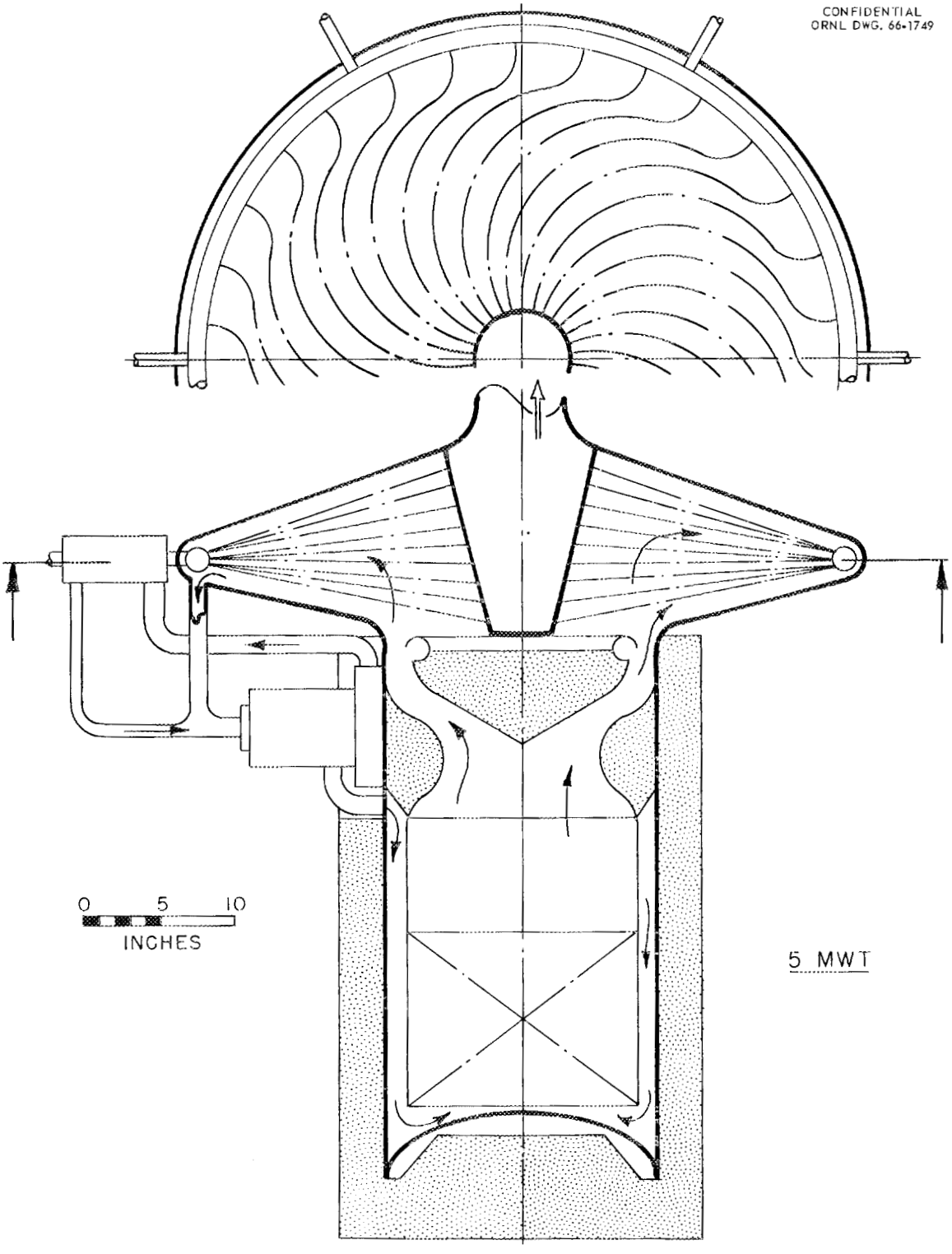

Figure 15. Reactor and boiler assembly for a system with a boiling potassium-cooled reactor closely coupled to the once-through boiler of figure 3.

nucleation sites. The vapor discharged from the free-turbine-driven pump would be condensed in a small shell-and-tube condenser that would serve as an upper stage of the regenerative boiler feed heater system.

One reason for tapering the boiler tubes is to reduce the vapor velocity sufficiently so that it will not tend to induce waves in the liquid film traveling over the boiler tube surface and tear droplets off the top of the waves. Thus the bulk of the liquid will move through the boiler tubes in an annular film and continue to do so up to very high qualities so that there will be very little liquid in mist form (which makes it difficult to evaporate).

Baffles would be arranged near the outer perimeter on the shell side of the boiler to provide adequate flow passage area for the liquid to be returned to the boiler recirculating pump. The liquid passages would be so designed that the smallest passages in the reactor system would lie within the reactor core, and hence capillary forces would tend to cause the liquid to accumulate there first if the system were stopped.

The dimensional and weight data for the boiler portion of the assembly are given in Table 12. Note that pressure stresses make it necessary to employ a rather thick and heavy shell for the boiler. Since this mass of material is also effective as gamma shielding, only a portion of it should be charged to the boiler.

It appears that the configuration of Fig. 15 is also well suited to liquid-cooled reactors. The principal difference would be that an electric motor-driven circulating pump would be required, and this probably should be located well out in the shield to get it into a field of low radiation intensity to reduce the possibility of ionization and corona discharge in the field windings. The weight of the boiler should be about the same as for the boiling reactor of Fig. 15.

Turbine-Generator Units

Using the AiResearch turbine-generator unit laid out for the SNAP-50 power plant as a point of departure, envelope dimensions were estimated for the four power plants under study. The determining factor other than

power in scaling the turbine appears to be the vapor density leaving the turbine since the actual vapor velocity will be essentially independent of turbine-generator size, and the quantity of vapor that can flow through a casing will increase as the square of the casing diameter.

Efforts to scale up the generator may pose difficult problems with the bore seal. For this reason it was decided not to attempt to scale up the turbine generator unit beyond 1 Mw of electrical output, but rather to install a multiplicity of turbine-generators. An obvious step was to retain the sextant symmetry of the MPRE radiator and employ six turbine-generator units. By clustering them with the generators close to the center of the launch package, it is believed that these units can be made to contribute substantially to the gamma shielding over the top of the reactor. Proportions estimated for the turbine-generators are given in Table 13.

Size and Weight of Integrated Power Plants

The size and weight of each of a series of power plants was estimated for electrical outputs of 367 kw, 1 Mw, and 5 Mw for each of the systems of Figs. 1 through 6. The data of Tables 4, 8, 10, 11, and 12 together with Refs. 14 and 15 served as the basis for the estimates.

Configurations were roughed out for several single-loop systems of up to 5 Mw of electrical output using the MPRE reference design for a launch package as the point of departure. In estimating the relative size and weight of the various 1-, 2-, and 3-loop systems of Figs. 1 through 6, it seemed best to make use of the 2.2 Mw(t) output SNAP-50 reactor system as a point of departure. The electrical output from a 2.2 Mw reactor in a single-loop system was found in Table 4 to be 367 kw. The other five systems were then scaled to maintain the same value for the electrical output. Assuming reactor-shield-radiator configurations similar to that used for the single-loop system, weights were estimated for the various components of each of the systems of Figs. 1 through 6 for a design output of 367 kw(e). The same basic procedure was then

Table 12. Dimensional and Performance Data for a Series of Once-Through Boilers for the Reactor-Boiler Configuration of Fig. 15

Thermal output, Mw	2.2	5		25
Vapor density at exit, lb/ft^3	0.226	0.226	0.226	0.226
Vapor velocity at exit, ft/sec	50	50	50	50
Vapor flow rate, lb/sec	2.72	6.19	10.24	30.9
Vapor flow passage at exit, ft^2	0.24	0.55	0.91	2.75
Tube vapor outlet ID, in.	0.50	0.50	0.50	0.50
Tube vapor inlet ID, in.	0.30	0.30	0.30	0.30
Number of tubes	176	400	800	2000
Tube length, ft	4.4	4.4	4.4	4.4
Average heat flux, $Btu/hr\text{-}ft^2$	85,000	85,000	85,000	85,000
Vapor header drum mean diam, in.	4.0	5.5	7.7	12.0
Vapor header drum height, in.	8	9	12	17
Boiler shell OD, in.	40	42	44	49
Boiler shell internal height at outer perimeter, in.	0.4	0.6	1.0	2.0
Weight of tubing, lb	110	220	440	1100
Header drum thickness, in.	0.4	0.55	0.77	1.2
Weight of headers, lb	90	120	200	500
Shell thickness, in.	1.0	1.0	1.0	1.0
Shell weight, lb	1100	1200	1300	1500

Table 13. Size and Weight of Turbine-Generators

Electrical Output, kw	367	1000
Diameter, in.	15	20
Length, in.	42	72
Inlet pipe diameter, in.	4	5
Weight, lb	825	2475

applied to estimate weights for the larger output plants. Each of these three steps in the work is discussed in a section below.

Power Plant Layouts

The dimensional data of Tables 10 and 13 together with data for the reactor and shield from Refs. 14 and 15 were used to layout three single-loop systems having design capacities of 367 kw, 1 Mw, and 5 Mw of electrical output. These were prepared to give an idea of the proportions that these power plants would have as well as the more important space allocation problems involved in integrating the major components.

The same overall design considerations that led to the layout for the 1 Mw(t) MPRE launch package[16] favored the choice of an essentially similar layout and set of proportions for the larger power plants. Figure 16 shows a set of layouts for single-loop systems designed to deliver electrical outputs of 367 kw, 1 Mw, and 5 Mw. While the length-diameter ratio of the radiators for the small launch packages could be varied substantially within the envelope of any of several of the available launch vehicles, the diameter for the 5 Mw electrical output plant was chosen to fit in the largest vehicle available, the Saturn 5. This fixed the maximum radiator diameter at 33 ft.

In preparing layouts for the radiators of the larger power plants, particularly the largest, consideration was given to the use of three or four banks of tubes to make up the required total height. If two banks of tubes were used, the tubes would have to be 25.7 ft long, a large but not unreasonable length. Such long columns would require intermediate stiffening rings to avoid buckling under the launch loads, but these could readily be included in the form of aluminum rings in back of the reflectors behind the tubes. The use of three banks of 17 ft long tubes, or four banks of 12.5 ft long tubes, would reduce the area vulnerable to meteoroids and hence the armor weight at the expense of some complication in the ducting for the potassium vapor and the condensate plumbing. Three-bank or four-bank radiators would be similar to the two-bank configuration shown for the 5 Mw power plant except that a larger number of smaller ring manifolds and radial ducts would be required.

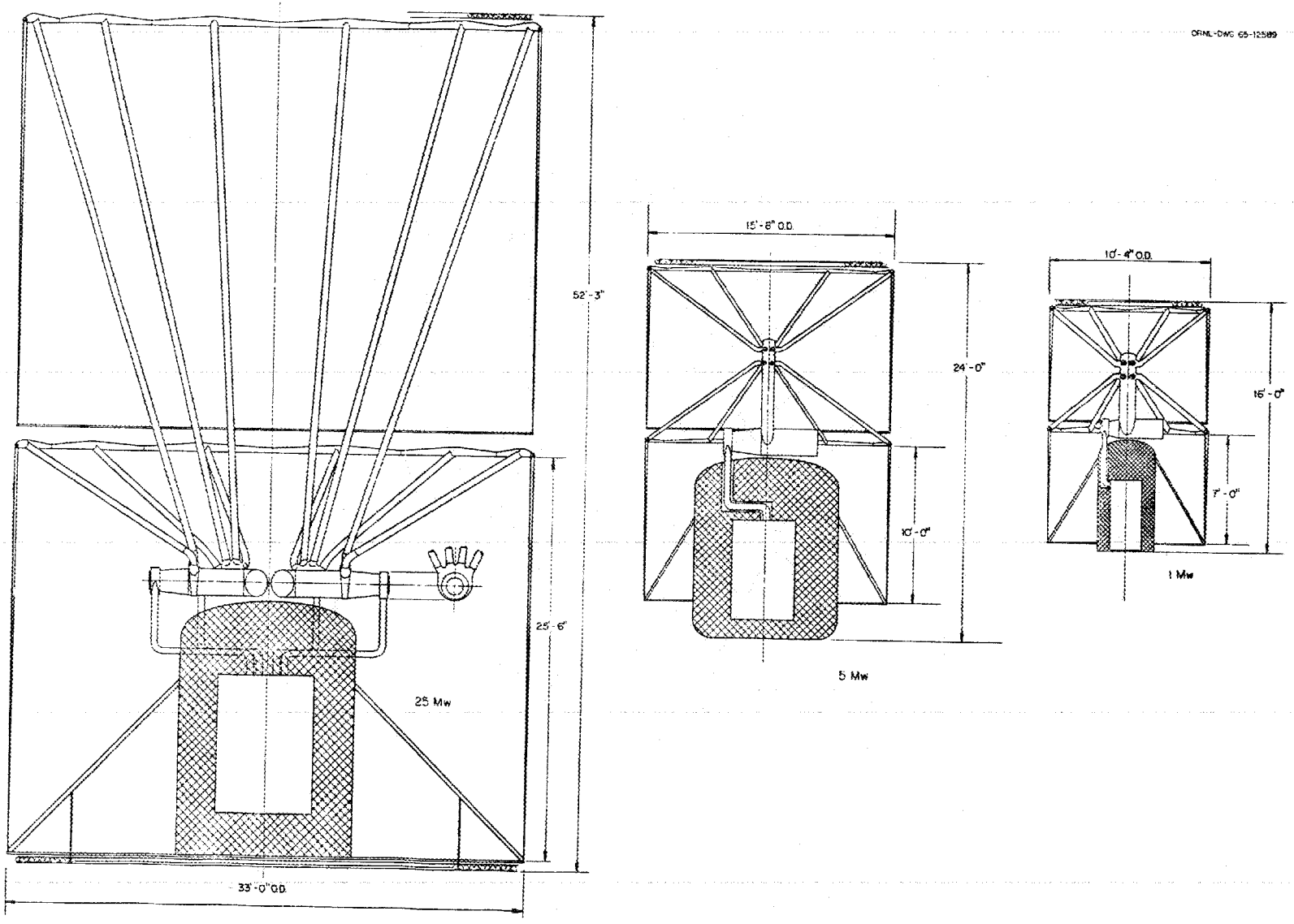

Fig. 16. Launch package layouts for three typical sizes of single-loop power plants based on the single-loop of figure 1.

In preparing the layout of Fig. 16 for the potassium vapor ducts in the 5 Mw(e) power plant, structural consideration led to the choice of 12 radial spokes to each of the ring manifolds. This was considered necessary to stiffen the ring manifolds in view of the much larger ratio of the diameter of the radiator envelope to the diameter of the tube forming the ring manifold. As discussed in the section on generators, six turbine-generator units were used in parallel with four ducts extending from each turbine (two ducts going to each ring manifold). By linking the inboard ends of the generators together at a common point at the center of the array (see Fig. 16), a strong structure for launching is obtained with good flow of the loads from the turbine-generator units out to the ring manifolds, and from the ring manifolds down through the tubes to a mounting ring that would be installed at the base of the lower tube bank. The tubes would be quite adequate to carry 10 g loads during launching operations if restrained from buckling by the stiffening effects obtainable by using polyurethane foam to bond the reflectors and the outer shutters to the finned tubes, and adding some additional stiffening rings in back of the reflectors. The polyurethane foam would vaporize and disappear during a slow warmup in orbit with no residue.

The shields for the power plants of Fig. 16 were laid out on the premise that the 367 kw(e) power plant would be used for unmanned probes or satellites, whereas the larger power plants would be employed for manned vehicles and hence would require substantially thicker shields.

Consideration was also given to maintenance problems including both those associated with ground testing and those that might be involved in a manned space vehicle. Access to the power plant during reactor operation would be desirable, but it does not appear to be either essential or practicable. Access to the principal elements of the power plant other than the reactor would certainly be required after shutdown during ground tests to permit maintenance. To meet these maintenance requirements, the shielding must be designed not only to attenuate the fission product decay gammas but it must also reduce the activation of material outside the shield to a level such that it will not interfere with maintenance activities. The neutron shielding as laid out for the power plants of Fig. 16 would be adequate to keep activation of equipment outside the reactor to

a trivial level. However, the gamma shielding that would be installed in a flight shield would not be adequate to permit direct access of personnel to the vicinity of the reactor immediately after shutdown.

Access to equipment other than the reactor is also an important consideration in the course of a reactor test. The small launch package in Fig. 16 is so compact that access to components such as the turbine-generator unit, the free-turbine-driven feed pump, the instrument pickups, and the control drives would be difficult indeed. It was for this reason that the power plant was separated into three packages for the MPRE ground test unit. This separation would not be necessary for the larger power plants in which the space between the reactor shield and the radiator is much greater than in the reference design for a launch package version of the MPRE.

With appropriate modifications to include the additional equipment required, the basic layouts shown in Fig. 16 for the single-loop system of Fig. 1 seemed well suited to the other five systems. For example, the reactor-boiler assembly of Fig. 15 for the 2-loop system of Fig. 3 entails little change in the overall plant layouts. The same basic reactor-boiler configuration also serves well for the liquid-cooled reactor systems of Figs. 5 and 6. This reactor-boiler-shield configuration has the advantage that fission products from leaking fuel elements would be confined within the shield assembly so that their deposition in the boiler would not increase the radiation dose to the crew.

The shell-and-tube condensers of the systems of Fig. 4 and Fig. 6 can be located immediately adjacent to the turbine-generator units to minimize the length of vapor ducting required. This, too, has little effect on the overall power plant layout. By far, the most important effect is the increased radiator size for the multi-loop systems; this would be obtained by increasing the radiator height while holding the diameter constant.

The height of the launch package could be reduced by placing at least a portion of the radiator for the auxiliary cooling system across the ends of the launch package, as shown in Fig. 16. For the systems of Figs. 1, 2, and 3, for which the heat load is fairly small, the area available at the ends is about equal to that required to handle the

entire auxiliary heat load. For the other three systems, the auxiliary heat load is larger and the area at the ends of the cylinder will not be sufficient to dissipate all of the heat to be rejected from the auxiliary cooling system. At least a portion of the auxiliary radiator would have to lie on the cylindrical surface and add to the length of the power plant.

In all cases, the layouts provided that the reactor-shield assembly would be supported by a sheet metal cone with its internal surface polished to reflect the heat emitted from the shield to space. In all instances, the heat generated in the shield by nuclear radiation would be conducted to the surface of the shield either by beryllium rods or by heat pipes. The related design problems are discussed in Ref. 15.

The latest CANEL layout for a 3-loop SNAP-50 power plant is shown in Fig. 17 for convenience in comparing it with the layouts of Fig. 16. The most important difference between it and Fig. 16 is the addition of the side shielding for the reactors in Fig. 16, a change that makes it possible to place the reactor and shield assembly inside the base of the cylindrical radiator. This has the advantage that it lowers the center of gravity of the power plant assembly, reduces the structural weight, reduces the overall height of the assembly, and makes it possible to check out the system immediately prior to launch without having to design the fluid systems so that they will operate under a minus 1-g condition because the system would be inverted on the launch pad. While it is true that the CANEL layout gives a lower shield weight for those cases in which no side shield on the reactor is required, the more compact installation and lower center of gravity of the layout of Fig. 16 reduces the structural weight requirement sufficiently so that, at least in some instances, the saving in structural weight more than offsets the added weight of material in the side shield. Even if it did not, the advantages of the more compact power plant assembly in the large vehicle design are likely to more than justify the additional weight that may be associated with the side shielding for the reactor.

[redacted]

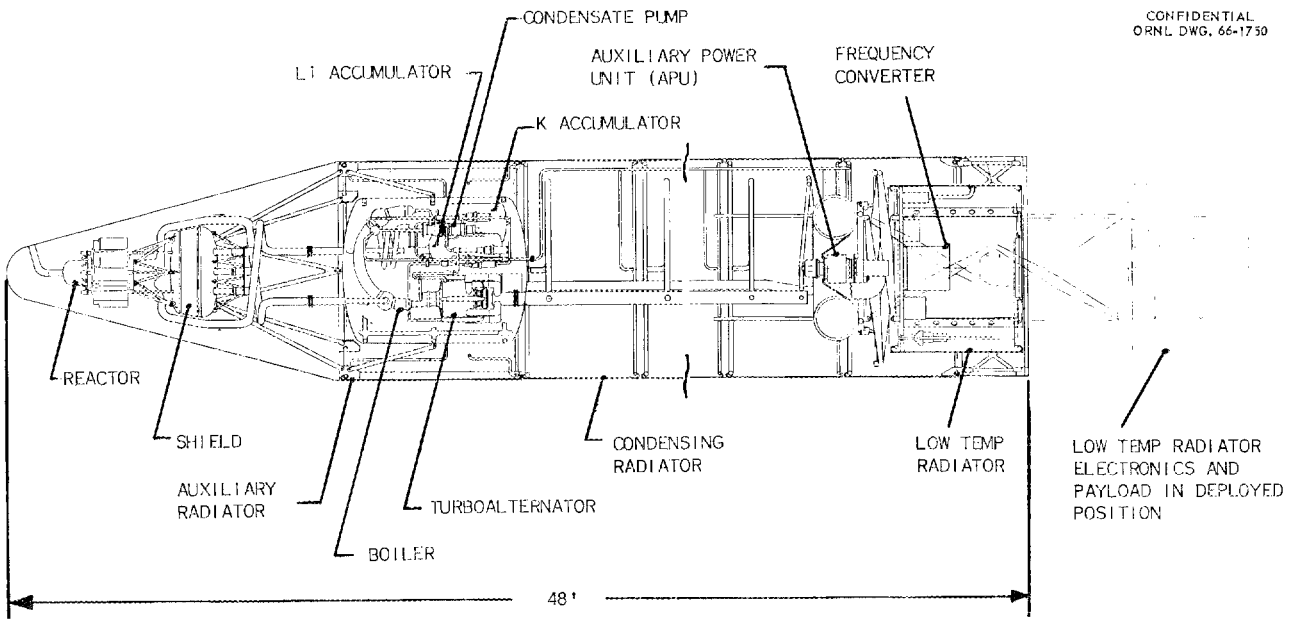

Figure 17. Launch package layout prepared by CANEL for a 3-loop power plant similar to the system of figure 6.

[redacted]

Size and Weight of 367 kw(e) Power Plants

The data of Tables 4, 8, 10, 11, and 12 together with reactor weight data from Ref. 14 were used to estimate the weight of the various components of the six systems shown in Figs. 1 through 6. The weight estimates are summarized in Table 14. Corresponding values for the SNAP-50 systems prepared by CANEL are presented in the first two columns. For comparative purposes, values for a scaled-up MPRE (a stainless steel single-loop system designed for a reactor outlet temperature of 1540°F) are given in the third column. Except for the scaled-up MPRE, all of the systems would be built of refractory metal and would employ a reactor outlet temperature of 2000°F.

The weights of the major components for the systems of Figs. 1 through 6 were taken from Tables 8, 11, 12, and 13, and from Ref. 14 which provided the data for the reactor weights.

In systems 3, 5, and 6 with separate reactor cooling circuits, a number of important points led to substantial differences in the weight of the primary circuit pump, accumulator, and piping as compared with the values for the SNAP-50 systems. The use of potassium as a reactor coolant in place of lithium led to three times the pumping power requirement for systems 5 and 6. Placing the boiler assembly close to the reactor, as shown in Fig. 15, reduced the piping weight, particularly for system 3 which employs a free-turbine-driven circulating pump. Possible difficulties with the effects of radiation in the windings of the electric motors made it seem best to place the electric-motor-driven circulating pumps for systems 5 and 6 outside the shield, and this led to a greater piping weight than would be required for the boiling reactor circuit of system 3.

The weights of the shell and tube boilers given in Table 12 were used in Table 14 for systems 3, 5, and 6. While the configuration of Fig. 15 was assumed, this entails a high casing weight which, since it would be quite effective as gamma shielding, was not included in Table 14.

The weight of the turbine generator was scaled from that for the SNAP-50 unit assuming that the weight would be directly proportional to the gross generator output. In addition, because of the lower vapor

Table 14. Summary of Estimated Weights for the 1-, 2-, and 3-Loop Systems of Figs. 1 Through 6 for a Net Electrical Output of 367 Kwe in Each Case*

(The reactor outlet temperature = 2000°F for all cases except for the scaled-up MPRE)

System	SNAP-50	SNAP-50		1	2	3	4	5	6
	2-Loop Direct Condenser	3-Loop Indirect Condenser	Scaled-Up Stainless Steel MPRE	Single Loop with Boiler Jet Pump	Single Loop with Boiler Centrifugal Pump	2-Loop Boiling Reactor, Direct Condenser	2-Loop Boiling Reactor, Indirect Condenser	2-Loop Liquid-Cooled Reactor, Direct Condenser	3-Loop Liquid-cooled Reactor, Indirect Condenser
Reactor Outlet Temperature	(2000°F)	(2000°F)	(1540°F)	(2000°F)	(2000°F)	(2000°F)	(2000°F)	(2000°F)	(2000°F)
Reactor Circuit									
Reactor	1800	1800	1270	1170	1190	1170	1220	1110	1130
Primary circuit pump	100	100	---	---	----	30	----	300	300
Primary circuit accumulator	100	100	---	---	----	100	---	100	100
Primary circuit piping	184	184	---	---	----	100	---	270	270
Thermodynamic Cycle									
Boiler	200	200	---	---	---	200	---	218	230
Turbine-generator	825	825	1025	825	825	825	870	900	956
Feed pump	100	100	30	30	40	30	30	30	30
Condensers	---	200	---	---	---	---	210	---	230
Accumulator	100	75	---	---	---	75	---	---	75
Piping and valves	560	200	475	300	330	300	316	260	320
Miscellaneous	---	---	---	---	---	---	---	---	---
Main Radiator Circuit									
Main radiator (no armor)	1700	1250	1610	840	846	916	1132	1108	1520
Meteoroid armor			610	470	474	525	210	712	325
Pumps		400	---	---	---	---	420	---	460
Accumulators	---	280	---	---	---	---	280	---	280
Piping and valves	---	286	---	---	---	---	286	---	286
Auxiliary Radiator Circuit									
Radiator (no armor)	410	450	245	245	245	245	438	387	624
Meteoroid armor			80	60	60	61	119	139	218
Structure, Electric Power and Controls									
Structure	400	400	280	160	160	170	230	240	320
Electric power supply to motors	215	300	---	---	---	---	115	185	320
Low temp. radiator system	100	125	---	---	---	---	---	---	---
Controls and instrumentation	250	250	100	100	100	150	200	200	250
Total System	7250	7746	5725	4200	4260	4900	6070	6160	8250

*Except for the SNAP-50 Systems.

density for the scaled-up MPRE, the turbine weight was increased by an estimated 200 lb. No credit was taken for the weight saving that should be made possible as a consequence of the increased vapor density entering the turbine in systems 1 through 4.

The weight of the feed pump was estimated from layout work which used the MPRE boiler feed pump as the point of departure.[17] The basic design for this free-turbine-driven pump unit has been subjected to over 1000 hr of water test work and about 2600 hr of testing with potassium.[17] The weight of the electric motor-driven pumps was based on the CANEL pump weight estimates with allowances for reductions in the specific weight that should accrue from the increased pump efficiency in the larger flow ranges.

The weight of the expansion tank for the thermodynamic cycle circuit of systems 1, 2, and 4 was included in the estimate of the reactor weight. The values used by CANEL for the SNAP-50 systems were employed for the circuits of systems 3, 5, and 6. If the piping is designed on the basis of a consistent set of fluid velocities and pressure drops, its weight will increase with the reactor thermal power output, the length of the lines, and — in the vapor pipes — the specific volume of the vapor. In estimating the weight of the piping and valves for the thermodynamic cycle circuits with direct condensers, the weight of the radial ducts and hub was included. (This was obtained from the second last line on Table 9.) The weight of the condensate return piping, the boiler feed piping, the regenerative feed heater, the valves, and the jet pumps was also included. In general, the vapor ducts for the direct condensing systems gave a greater weight per foot of duct than for the corresponding indirect condensing systems, but this was largely compensated by the effects of the greater fluid weight flow rates required in the systems with the indirect condensers and the lower vapor specific volumes in the pipes between the boiler and turbine, and between the turbine and the condensers, as well as the higher thermal power outputs for the latter systems.

The weights for the main radiators and the meteoroid armor were taken from Table 10. The weight of the pumps, accumulators, piping, and valves for the indirect radiator systems were taken from the SNAP-50 values

for the 3-loop system with a correction for the higher thermal output required to give a net output of 367 kw(e).

The weight of the structure was taken as being directly proportional to the overall height of the radiator system as given by Table 4 using the CANEL estimates of structural weight for the 3-loop system as a point of departure. The weight of the electrical power supply for the electric-motor-driven pumps was taken as being directly proportional to the pump power requirements as given in Table 4. The low-temperature radiator system weight was estimated in the same fashion. The weight of controls and instrumentation was scaled from the number of control functions required as outlined later in this report. The sum of the component weights was then obtained to give the total weight of the system without the shield.

In appraising the values given in Table 14, it appears that the only definite inconsistency is the relatively small difference in weight between the 2- and 3-loop CANEL systems as compared to the substantially larger difference in weight for systems 5 and 6 of this table. Much of this appears to lie in the radiator which, in the CANEL estimates, is 450 lb lighter for the 3-loop system than for the 2-loop system, whereas the calculations for systems 5 and 6 of Table 10 indicate the reverse effect. A review of the detailed radiator weight estimates presented in this report indicates that they are consistent, and that the CANEL radiators were probably not designed on the basis of the same set of premises. Most of the balance of the disparity between the CANEL and subject weight estimates stems from the fact that the CANEL estimates were for a constant reactor thermal output; allowance for the 7% difference in net electrical output increases the difference in weight between the two CANEL systems by about 500 lb.

It is interesting to compare the scaled-up stainless steel MPRE system operating at 1540°F with the refractory metal systems operating at temperatures of 2000°F. Table 14 clearly indicates that the cost of the materials development work associated with the refractory metal systems has less justification from the power plant size and weight standpoint than the development costs associated with the special problems of the boiling potassium reactor system.

Size and Weight of Power Plants for Outputs of 367 kw(e), 1 Mw(e), and 5 Mw(e)

Following the procedures outlined in the previous section, the data of Table 14 were extended to show the effects of system design output on the relative size and weight of the various systems. The results are summarized in Table 15. In estimating the effects of the increased size, it was assumed that except for the reactor and the meteoroid armor, the weight of the components would be directly proportional to the design power output. The reactor weights were obtained from Ref. 14, while the meteoroid armor weight was obtained following the procedure outlined in the section on radiator weights. Note that the meteoroid armor weight increases much more rapidly than linearly with design power output whereas the reactor weight increases at less than the linear rate.

In appraising Table 15 for consistency, it is a bit surprising to see that the boiling reactor weights for the single-loop system of Fig. 1 are about 7% lower than the corresponding liquid-cooled reactor weights for system No. 6 in spite of the fact that the boiling reactors have a slightly greater diameter. Note, however, that the reactor thermal output for the 3-loop system of Fig. 6 is about 15% greater than that for the single-loop system as a consequence of the extra pumping power requirements. Use of a liquid-cooled core reduces the coolant volume fraction and diameter, but the weight is greater because the greater thermal output required for the same electrical output also requires a greater weight of UO_2 as a consequence of fuel burnup limitations.

While the meteoroid armor weight is only about 10% of the power plant weight for the 367 kw(e) systems, it is roughly 20% of the power plant weight for the 5 Mw(e) systems. It is particularly interesting to note that even by using smaller diameter tubes in the indirect radiators and a factor of 10 higher probability for meteoroid penetration, the meteoroid armor weight for the 3-loop system is still about the same as the meteoroid armor weight for the single-loop system.

While the values given in Tables 14 and 15 represent estimates — the absolute values are obviously debatable — it is believed that the relative values are sound, and that any reasonable modifications of the approach used here would yield essentially similar results.

Table 15. Summary of Size and Weight Data for a Series of 1-, 2-, and 3-Loop Systems

System	1	2	3	4	5	6
	Single Loop with Boiler Jet Pump	Single Loop with Boiler Centrifugal Pump	2-Loop Boiling Reactor, Direct Condenser	2-Loop Boiling Reactor, Indirect Condenser	2-Loop Liquid-Cooled Reactor, Direct Condenser	3-Loop Liquid-Cooled Reactor, Indirect Condenser
367 kw Net Electrical Output						
Reactor thermal output, Mw	2.20	2.22	2.20	2.32	2.40	2.55
Reactor core diam, in.	12.1	12.1	12.1	12.3	11.0	11.2
Reactor weight, lb	1170	1190	1170	1220	1110	1130
Radiator height for 10-ft-diam, ft	17.8	18.0	19.1	25.7	27.1	38.3
Radiator weight without armor, lb	1164	1170	1245	1619	1591	2204
Meteoroid armor weight, lb	530	533	586	327	851	543
Total system weight,* lb	4200	4260	4900	6070	6160	8250
1 Mw Net Electrical Output						
Reactor thermal output, Mw	6.0	6.05	6.0	6.33	6.54	6.95
Reactor core diam, in.	16.9	16.9	16.9	17.2	15.5	15.8
Reactor weight, lb	2360	2370	2360	2430	2200	2300
Reactor height for 16-ft-diam, ft	30.2	30.6	32.5	43.8	46.3	65.3
Radiator weight without armor, lb	3170	3180	3390	4410	4330	6000
Meteoroid armor weight, lb	2020	2030	2240	1250	3250	2070
Total system weight,* lb	11,180	11,240	13,280	15,970	16,850	22,300
5 Mw Net Electrical Output						
Reactor thermal output, Mw	30.0	30.3	30.0	31.6	32.7	34.75
Reactor core diam, in.	28.9	29.0	28.9	29.4	27.1	27.7
Reactor weight, lb	7630	7690	7630	7870	7440	7800
Radiator height for 33-ft-diam, ft	73	75	78	107	112	158
Radiator weight without armor, lb	15,800	15,900	16,900	22,000	21,600	30,000
Meteoroid armor weight, lb	14,200	14,300	15,700	8780	22,800	14,600
Total system weight,* lb	55,850	56,490	66,750	78,260	86,360	111,900

*Total power plant weight except shielding.

Shielding Problems

So many factors influence the shield weight that these effects are the subject of a separate report.[15] For the purposes of this report it has seemed best to examine the six systems under study and compare them from the shielding standpoint.

The most important factor influencing the shield weight is the core diameter. Table 15 shows that, for any given power plant electrical output, the reactor core diameters for the six different systems differ by only about an inch, and hence the basic shield weights should differ relatively little.

Introducing a void in the shield by incorporating a boiler such as that of Fig. 15, or a vapor separator-expansion tank assembly such as proposed for the reactors of systems 1 and 4, leads to an increase in shield weight that depends mainly on the void volume. Since the vapor separator-expansion tank assembly for the reactors of systems 1 and 4 are smaller than the boilers of systems 3, 5, and 6 the shield weight penalty should be smaller. Note that the vapor separator of system 2 need not be inside the shield, hence it would not increase the shield weight.

One of the principal objections to a single-loop system has been the possibility of radioactive material moving outside the shield and entering the radiator where it would contribute to the dose to the crew. This problem has been examined in considerable detail.[3,4,11,15] Activation of the reactor coolant in a fast reactor is much lower than one might expect because the neutron spectrum includes a relatively small fraction of thermal neutrons. The use of a boiling reactor further eases the activation problem because roughly 75% of the coolant passage volume is occupied by vapor rather than liquid. As a consequence, for the 1 Mw(t) MPRE, the dose to the crew is estimated to be about 3 mr/hr for natural potassium and a reactor-crew separation distance of 150 ft with no credit taken for the shielding benefits that could be obtained from a judicious disposition of supplies and equipment in the spacecraft. This dose could be reduced by a factor of about 100 through the use of separated potassium which it is estimated would cost around $420/lb from a $2,500,000 plant designed to produce 2000 lb/yr.[15] The MPRE would require about 50 lb per reactor.

The total gamma dose rate in the crew compartment will probably be kept to 1 to 5 mr/hr,[1] hence, with the benefit of the shielding effects of equipment and supplies, the dose to the crew from potassium in the radiator of a single-loop system might be acceptable with natural potassium, and certainly would be acceptable with the highly enriched ^{39}K. Even for a 30 Mw(t) reactor, the dose to the crew from a separated isotope would be only about 1 mr/hr without any allowance for the reduction in dose obtainable by a favorable disposition of equipment and supplies.

Very little work has been carried out on the possibility of arranging the equipment and supplies in a spacecraft so that there would be a reduction in the radiation dose to the crew. However, interposing 10% of the mass of a 180,000 lb vehicle between the reactor and the crew would reduce the dose to the crew by a factor of about four. This would be helpful not only for normal operation but also under such abnormal conditions as jettisoning the reactor while retaining the bulk of the shield with the spacecraft.

Corrosion and mass transfer have been examined as mechanisms for transporting activity from the reactor core to the radiator of a single-loop system.[15] Briefly, the mass transfer rate is very low and, in the systems of Figs. 1 and 4, the evidence from both analysis and test systems is that whatever material movement does occur will be from the condenser to the boiler rather than vice-versa because, in effect, the recirculating boiler acts as a still, and the vapor leaves the boiler in refined form. A small amount of dissolved solids will be carried in a small flux of liquid, but test experience indicates that the amount of material that could possibly move in this fashion is far less than the amount required to give a significant dose to the crew.[15]

A leak in a fuel element will permit fission products to contaminate the radiator. The data that have been obtained from experience with sodium-cooled reactors, in-pile tests, and basic studies of fission product movement indicate that about 3 curies might leak from an MPRE fuel element and be carried to the radiator.[3] This would give a radiation dose at the crew of less than 1 mr/hr. Since much of the activity is fairly short-lived, the dose to the crew will depend mainly on the reactor power output and the fuel temperature. The latter in turn depends on the extent to which

the helium in the fuel capsule may be replaced by potassium vapor which has a relatively low thermal conductivity. If all of the helium in the fuel capsule is replaced by potassium vapor, the fuel internal temperature, and hence the fission product release rate, can be kept sufficiently low that the equilibrium activity in the radiator will be below 3 curies if the reactor output is kept to 70% of full power. Analysis also indicates that, for the smaller diameter fuel element design contemplated for the reactors of this study, the fission product release per element should be lower in spite of the higher surface temperature. While the experimental data on which the analyses were based were obtained for a variety of fuel elements and operating conditions, none were for exactly the conditions of this study, and hence an in-pile test should be run with a deliberately defected fuel element to provide a higher degree of assurance that the fission product release would indeed be quite small.

3. RELIABILITY OF MECHANICAL COMPONENTS

The first step in estimating the reliability of a power plant is to establish the probability of the various types of component failure that might occur. Ideally, the data used to estimate the reliability of the individual components should be for well developed types of equipment from which design defects have been eliminated by a development test program. This section summarizes the pertinent information that could be found. Not surprisingly, it has been found necessary to interpolate between extensive data for well developed conventional equipment and limited data for only partially developed high temperature equipment. Surprisingly, the failure rates were generally found to be within a factor of 10 to 100 for a given component, thus giving credence to the significance of the interpolation.

Basic Reliability Considerations and Data

Materials Compatibility

A first and obvious requirement for a long-lived plant is a set of compatible materials. In steam plants and internal combustion engines deposits in the form of ash, sludge, or scale often limit the length of operating periods without maintenance. Deterioration of organic lubricants because of oxidation or breakdown at elevated temperatures in machines such as internal combustion engines causes the gradual buildup of deposits in piston ring grooves, on valve stems, and the like which lead to either a deterioration in performance or actual failure of parts. Mass transfer such as that in mercury systems where material is dissolved in a hot zone and deposited out in a cold zone is akin to corrosion except that the material deposited may plug passages and have ill effects more serious than those associated with the loss in wall thickness where the material was removed.

Both the operating temperature and thermal cycling have important effects on the life of equipment, particularly for organic lubricants, gaskets, and diaphragms. Electrical equipment is also sensitive, e.g.,

precision wire-wound resistors and germanium diodes (which will be discussed later). For nuclear plants, radiation damage is also a major problem, and its effects are dependent on the operating temperature of the material.

Wear in rubbing parts is always likely to limit the useful life. If fully developed hydrodynamic-lubrication conditions prevail, there should be no wear, but boundary lubrication conditions are usually unavoidable during starting and stopping so that wear may occur at this time. Once a surface is scuffed, its load capacity is reduced and further deterioration is likely to follow at a rapid rate. If it is not possible to design for fully developed hydrodynamic lubrication conditions, wear rates can be reduced by the proper choice of lubricants, surface materials, operating temperature, and maintenance of a clean supply of lubricant.

Materials problems are so diverse and so complex that they often become very confusing. In attempting to evaluate the reliability of a proposed system, it is important to distinguish between basic feasibility problems that depend on materials research and separate them from engineering development problems. While large errors can be made in attempting to predict the time and the cost involved in solving the engineering problems, there is no way to estimate the time and cost required to solve the materials problems, as clearly attested by some of the less fortunate experience in the Aircraft Nuclear Propulsion Program.

System Integrity

The fluid system in a space power plant not only must be structurally strong so that the probability of a conventional structural failure will be very low indeed, but it must also have an exceptionally high degree of leak tightness since loss of the fluid to the surrounding vacuum can occur through even a very tiny leak. The large background of experience that has been accumulated in the development of the ASME Pressure Vessel Code gives a splendid basis for design work that will assure an extremely low probability of a burst type of failure, and there is a widespread acquaintance with the requirements and design

procedures. The specialized experience on which to base the design of a red hot system for a high degree of leak-tightness is quite limited, however, and without it more than one otherwise highly competent organization has found that much time and money can be expended with little to show for the effort. Some indication of the nature of the problems and the probability of difficulty — once personnel have learned how to cope with these problems — is given by the ORNL operating experience summarized in Table 16. It should be noted that about 70,000 hr of this experience were obtained with six heat exchanger test rigs in which the fluid systems were roughly comparable in size and complexity to a fluid system for a 100 kw electrical output nuclear space power plant. The rigs were designed and built under the ANP Program, and were intended to have a life expectancy of the order of 1000 hr. Most of them were operated for periods of from 5000 to 25,000 hr with temperatures of 1500°F to 1600°F in the high temperature portion of the systems and 1000°F to 1300°F in the lower temperature portions. After the initial shakedown operations, the difficulties experienced were mostly in equipment outside the high temperature fluid systems. Personnel engaged in this work are unable to recall a single instance of a failure in either the base metal or the welds in components having wall thicknesses of 0.020 in. or more, except where — in retrospect — such a failure could have been anticipated. The latter failures that were experienced could be classified in one of three categories: (a) those resulting from thermal strain cycling caused by thermal transients and off-design conditions, (b) those resulting from failures in electrical heaters, and (c) catastropic oxidation from the air-side as a result of the improper use of materials in the installation. Most of the failures induced by thermal strain cycling occurred in components that were being tested to failure by deliberately severe thermal cycling conditions in order to establish design criteria.[18,19,20,21] The balance stemmed from our inability to anticipate the possible effects of certain thermal transients and off-design conditions.

The high degree of system integrity demonstrated in the ORNL tests cited above stemmed from several important precepts. The first of these was that all of the materials should be fabricated to close specifications and inspected intensively. This increased the costs for such items as

Table 16. Summary of ORNL Operating Experience with High Temperature Liquid Systems (1100°F to 2000°F)

Liquid metal (Na, NaK, K, Li) and molten salt systems operated under the ANP and Molten Salt Reactor Programs:

Thermal convection loops, hr	1,000,000
Small loops with electromagnetic pumps (3 to 20 gpm), hr	80,000
Small loops with centrifugal pumps (3 to 20 gpm), hr	465,000
Intermediate loops with centrifugal pumps (20 to 200 gpm), hr	60,000
Large loops with centrifugal pumps (200 to 1500 gpm), hr	110,000
Total hours	1,715,000

NaK Systems for Space Power Plants:

SNAP-50 loop	5,000
SNAP-8 loops	25,000

Boiling Potassium Systems:

	Stainless Steel	Refractory Metal
Capsules, hr	30,000	78,000
Thermal convection loops, hr	15,000	21,000
Single Firerod capsules, hr	85,000	---
Small forced convection loops, hr	20,000	3,000
Scale mockups of MPRE system, hr	7,700	---
Total hours	157,000	102,000

tubing by factors of from two to ten — much of it for inspection alone. The effort and expense to assure freedom from defects in tubing was demonstrably worthwhile, however, since the number of defects found in some lots of commercial tubing in the early stages was so great that nearly every piece was found to be unacceptable. In selecting tube sizes and proportions, it was found that the wall thickness should not be less than 0.020 in. since the grain size in structural metals is occasionally as much as 0.010 in. so that, with thinner than 0.020 in. walls, there are bound to be areas in which only one or two grains will extend across the entire tube wall thickness. An occasional intergranular crack or defect in these grain boundaries will lead to a leak. Similarly, sylphon bellows should be avoided if at all possible. Where they cannot be avoided, triple-ply bellows should be employed, and a careful stress analysis should be made to assure that at the operating temperature the required bellows deflection will not give stresses that exceed the elastic limit. All joints should be welded with full penetration welds. If — as in tube-to-header joints — these cannot be obtained, the weld should be back-brazed to eliminate the stress concentration in the reentrant crack behind the weld if it can be arranged. It is significant that, in the first three heat exchangers with thin-walled tubes that were tested on the ORNL program, leaks occurred both in welded and in brazed joints. Because of this, it was decided that all future tube-to-header joints should be formed by first welding and then back-brazing, and, in subsequent tests, approximately 7000 welded and back-brazed tube-header joints were operated without a single instance of a leak through such a joint in 20×10^6 tube joint hours of operation.[19]

Thus it appears that, by proper design with particular attention to minimizing thermal stresses and thermal strain cycling, and by carefully controlled welding and brazing procedures with proper inspection, a thoroughly hermetically sealed system can be assured with a very high degree of reliability — probably in excess of 99% after sufficient shakedown testing has been carried out to show up design and installation errors. Data on stainless steel-UO_2 fuel elements, for example, indicate that, with proper quality control,[23] the weld failure rate can be

kept lower than one failure per 10^9 weld operating hours, and less than one failure in a tube wall per 10^{10} tube-feet-hours.

Meteoroid Punctures

While major uncertainties were formerly associated with estimates of the probability of a meteoroid puncture of a space radiator, sufficient data are now at hand so that it is possible to estimate the probability of a meteoroid puncture to within about a factor of 2, and hence sufficient meteoroid armor can be provided to assure that the probability of a meteoroid puncture of a radiator will be less than any number that the designer may choose. Estimates of the resulting weight penalty for armor are outlined in the section on radiator weights.

In comparing different systems, it is important that the weight of the meteoroid armor be calculated on the basis of the sum of the radiator tube surface area and the surface area of the exposed manifolds and heat exchanger casings. For example, in the design of a lunar base power plant designated Lubar I, 113 separate radiator circuits were employed to reduce the vulnerability of the system to a meteoroid puncture of the radiator.[24] However, this led to the use of a large toroidal heat exchanger with the cycle working fluid on the shell side. The surface area of this heat exchanger was several times that of the total surface area of the radiator tubes and manifolds that would have been required for a stainless steel single-loop boiling potassium reactor power plant of the same output.

It is important to consider the consequences of a radiator leak caused by a meteoroid. If the meteoroid impacts in a zone filled with liquid, it may cause the tube to burst even if it does not penetrate the wall, especially if the back side of the tube is left thin as in the design outlined in a previous section. If the tube wall is simply perforated, the leakage rate will tend to be high, and for the region of interest the hole will probably have a diameter about equal to the armor thickness, i.e., about 0.2 in. For this size hole, liquid loss from the system will occur rapidly, and within much less than a minute the circulating pump will lose its prime and cease to function. If a meteoroid

were to puncture a 0.2-in.-diam hole in a tube or manifold carrying vapor, the very much lower fluid density will lead to a much lower rate of loss of fluid from the system. If the leak can be sensed shortly after it occurs and the system power output reduced so that the pressure in the direct condenser will be dropped to 10% of the pressure at full power, the rate of leakage will be only about 0.001 lb/sec, or 3.6 lb/hr. The 2000°F, 367 kw(e) single loop system of Table 15 was designed so that it can lose about 10 lb of liquid potassium without encountering any serious difficulty. Further, in a manned vehicle it should be possible to add fluid to the system from a supply tank so that an even greater quantity of fluid could be lost without serious effects. This suggests that, if the leak could be detected shortly after it formed, some repair measure might be possible.

Turbines, Generators, Pumps, and Motors

Several sets of data have been examined in an effort to assess the reliability of the turbine, generator, pumps, and motors. The first of these is for the steam turbine-generator units in the steam power plant for the Oak Ridge Gaseous Diffusion Plant.[25] A second set of data was compiled from experience with the steam turbine generator units in the TVA power plants.[25] A third set of data has been accumulated in the course of ORNL tests of high-temperature liquid pumps,[26] while a fourth set of data has been obtained for electric motors in the Gaseous Diffusion Plant.[27]

The data for steam turbine-generator units indicate that the probability of the unit operating for a year without a forced shutdown is only about 0.05. However, a review of the log books showed that a large fraction of the forced outages stemmed from brush troubles in the exciter. These can be avoided through the use of a type of generator in which the field excitation is obtained from solid-state equipment. A large part of the balance of the troubles stemmed from difficulties with sticking of the throttle valve. These can be eliminated by using the control system contemplated for the MPRE. The steam turbine-generator data indicate that elimination of the brush and throttle valve trouble would increase

the probability of operating for a year without a forced shutdown from 0.05 to 0.60.[28] Provision of generous tip clearances for the turbine buckets, and generous clearances in the seals and other regions along the rotor will eliminate "rubs", one of the most important other sources of forced outages. The experience with ORNL pumps for high temperature liquids discussed below implies that difficulty with distortion and rubs can be kept to an extremely low level. By using the potassium vapor cycle working fluid as the lubricant, the basic supply of liquid should be unusually free of solids of the type found in organic compounds as a consequence of thermal decomposition and oxidation. While ORNL experience indicates that potassium-lubricated bearings are very sensitive to small dirt particles, the same experience also indicates that these particles can be effectively removed through the use of micropore filters that will not pass particles larger than 2 μ.[17] Since the bearings are lightly loaded, bearing failures caused by fatigue in the bearing material should not be a problem. Thus it appears that the principal potential cause of failure in a turbine-generator unit is likely to be an electrical or mechanical failure stemming from either thermal strain cycling or thermal distortion that may develop as a consequence of thermal strain cycling. The bore seal in the generator and the ceramic insulation in the windings appear to be particularly likely sources of trouble. However, it appears that, through proper design, the probability of the failure of a turbine-generator unit might be reduced to around 10% for 10,000 hr of operation.

ORNL operating experience with centrifugal pumps in high-temperature liquid systems (above 1000°F) totals over 450,000 hr. This experience has been summarized in Tables 17 and 18.[26,29,30] Note that the incidence of difficulties in Table 17 has been expressed in terms of pump operating hours, and that the difficulties have been divided into two categories, i.e., those in the pump itself and those associated with the test equipment such as the drive motors and the related control equipment. The three failures that occurred within the large pumps took place in the first few thousand hours of the development test work and led to small design changes. These were so effective that during the subsequent 160,000 hr of operation the only failures that occurred were in the test equipment, not the pumps. The experience with operation of the small

Table 17. Summary of Malfunctions in ORNL Centrifugal Pumps Having Capacities of 150 gpm to 1500 gpm Endurance Tested at Temperatures from 1100°F to 1300°F Total Running Time – 168,000 hr

Malfunction	Number of Incidents	Average Operating Time Between Failures-Hour
Pumps		
Excessive seal oil leakage	1*	> 160,000**
Seizure journal bearing	2*	> 160,000**
Seizure in close clearance region between shaft and casing	1*	> 160,000**
Drives, Controls, and Instrumentation		
Electronic drive system controls	3	56,000
Break in resistance grid	1	150,000
Drive motor		
Replace brushes	~20	7,000
Seized rotor	1	150,000
Hydraulic drives (used only on a few pumps)	4	~ 2,000
Liquid level indication		
Shorted probes	~15	11,000
Pump tank overfill	2	84,000
Gas system		
Frozen metal plug	6	28,000
Frozen salt plug	5	33,000

*Failure took place during first few thousand hours of testing of a new model.

**Excluding failures that occurred during the first few thousand hours of testing a new model.

Table 18. Summary of Malfunctions in ORNL Centrifugal Pumps having Capacities of About 5 gpm Endurance Tested at Temperatures from 1000 to 1300°F. Total Running Time – 290,000 hr

(Capacity 5 gpm)

Malfunction	Number of Incidents	Average Operating Time Between Failures-Hour
Pump		
Pump bearing failure	2	145,000
Impeller rubbing (mass transfer)	4*	42,000
Drives, Controls, and Instrumentation		
Oil rotary union	5*	33,600
Vee belt (drive)	8*	21,000
Motor bearing failure (3600 rpm)	17*	9,900
Eddy current coupling**	30*	5,600

*Detailed records available for only 168,000 hr of operation.

**Involved replacement of brushes and pilot bearings.

pumps covered by Table 18 was similar. It should be noted that 17 of the pumps in Tables 17 and 18 were operated for a year or more without trouble in the pump proper, and five of these ran for over 20,000 hr without any trouble with the pump. While most of the pumps tested employed oil-lubricated bearings located in cool zones, three were run with molten salt or liquid metal-lubricated bearings with no trouble. Thus ORNL test experience indicates that rotating machinery can be designed for operation in liquid metal systems in the 1000 to 1300°F temperature range to give component reliabilities in excess of 97% for 10,000-hr periods.

In reviewing the ORNL design precepts that yielded the surprisingly good pump reliability indicated by Tables 17 and 18, several points are apparent.[30] In addition to a careful choice of materials to provide good compatibility, the pumps were designed so that the stresses and bearing loads would be moderate — well below levels likely to give difficulty. The casings were designed so that the distortions to be expected under load or from temperature gradients under off-design conditions and in transients[21] would have a minor effect on the load capacity of the bearings. The pumps were made mechanically simple to minimize the cumulative effects of wear or distortion. The bearing materials and lubricants were chosen to provide good wetting of the bearing surfaces by the lubricant, and little or no tendency of mating rubbing surfaces to self-weld if no lubricant were present.

An insight into the reliability of electric motors is given by a set of data compiled for some 10^9 motor operating hours in the Gaseous Diffusion Plant at Oak Ridge. Table 19 summarizes data obtained over the past 17 yr for various sizes of electric motor.[27] Most of the failures were in the windings, the leads, or the bearings. These motors are normally operated at steady-state conditions continuously year in and year out, with shutdowns only when maintenance is required. It is significant that the lowest incidence of failures experienced for any of the various classes of motor is approximately 0.005 failures per motor operating year. This, of course, is for a well developed standard commercial motor with no bore seal, ceramic insulation for high-temperature

Table 19. Summary of Failure Experience with Electric Motors in the Oak Ridge Gaseous Diffusion Plant

Motor Hp	No. of Operating Units	Motor Failure Probability per Year	No. of Years of Operation	Motor Failures (by Calendar Year)																
				1964	1963	1962	1961	1960	1959	1958	1957	1956	1955	1954	1953	1952	1951	1950	1949	1948
2000	320	0.0121	8	1	1		2	1	6	2	2	6	6	6						
1750	320	0.0270	8	9	4		10	8	31	16	0	2	1	1						
950	13						2					1			1	2				
700	287	0.0118	8					2	7	4		3	1		1	5	4			
600	200			1											1	3				
500	100	0.0411	9			4	14	11	25	5	2	4	1	8	44	34	1			
560	200	0.0379	12	4	3	1	3	12	8	4										
400									10	33	2		6	5						
300	100	0.0564	14	3	8	7	16	9	5	3	3	4	5	6	4	3		3		
200	100	0.0775	5										1	13	13	4		0		
200	360	0.0125	14	1	3	3	9	1	9	3	3	3	1	13	6	5	3	0	1	
150	600	0.0345	17	1	12	4	27	32	38	27	30	32	24	21	33	24	9	6	14	18
100	1014	0.0102	17	2	4	5	15	18	20	10	19	8	13	14	8	12	5	9	7	7
75	450	0.0189	16	6	20	12	20	11	12	7	5	15	17	0	5	2	3	0	1	
60	967	0.0128	17	12	15	12	9	13	16	24	10	18	15	8	3	10	4	20	15	7
50	491	0.0123	17	5	2	8	4	4	2	5	2	5	5	5	8	7	4	15	10	11
30	834	0.0047	16		2	1	1	3	4	2	5	2	4	5	4	2	3	13	10	1
25	10	0.040	10		1					0	0	0	0	0	0	1	1	1		
20	726	0.0065	17	1	6	3	2	3	3	3	3	1	3	4	1	5	6	24	7	5
15	300	0.0269	14		5	1		1		0	3	25	37	12	1	4	3	15	4	2
10	120	0.0396	12						1	1	3	6	11	2	4	1	1	18	6	3
7-1/2	576	0.0233	10								1	17	24	30	6	9	12	14	10	11
5	576	0.0186	10								0	4	8	23	15	6	6	10	20	15

(1) Most 1750 hp motors fail because of a lead to stator winding break – a manufacturing deficiency – no program for correction.

(2) Most 500 hp motors failed because of deficiency in design (1952 & 1953) – rotors were rebuilt on program basis by manufacturer.

(3) Motors operated overloaded – subsequently rewound to 560 rating because of high failure rate.

(4) Operation of most 3600 rpm equipment phased out in 1964.

windings, or special cooling system to contribute to the failure probability. It seems doubtful that the reliability of a high-temperature electric motor could be as high as this.

Over 120,000 hr of ORNL experience with electromagnetic pumps is summarized in Table 20. These pumps have been largely of two types, simple low-head linear ac units with a large ac magnet to produce a magnetic field transverse to the electric current flow through a flattened portion of the channel, and moderately high head electrodynamic pumps which make use of an electric motor-driven rotating magnet running inside a circular loop of pipe through which a current is passed normal to the plane of the loop.

Table 20 indicates that the mechanical reliability of the simple, low-head linear ac pumps is good, while that of the moderately high head rotating magnet pumps is poor. The data of Table 20 include only failures within the pumps — numerous outages because of failures in the power supply or switchgear were not included.

Pumps of the helical induction type have been purchased, but no significant operating experience has been gained with them as yet at ORNL. It is understood that about 17,000 hr of operating experience has been accumulated with helical induction pumps by General Electric at Evendale, Ohio under NASA contracts.

Thermoelectric pumps do not depend on an electric power source or switchgear, but the pressure rise available is only about 1 psi, and they inherently require a large temperature differential between the hot and cold junctions on the liquid lines that induce the flow of electric current. This inevitably leads to large thermal stresses and consequently thermal strain cycling. About 18,000 hr of testing has been accumulated on 14 pumps. The longest life obtained has been about 6000 hr.[31]

Valves

ORNL experience with valves in high-temperature liquid systems is summarized in Table 21-a. The operating difficulties have been divided into two major types, i.e., those in which a bellows failure resulted

Table 20. Summary of ORNL Operating Experience With Electromagnetic Pumps

Alternating Current Conduction (Linear) Type

System	Operating Time (hr)
ANP heat exchanger tests	6,700
Corrosion loops	73,850
SNAP-50 loop	5,000
SNAP-8 loops	30,000
Total	115,550

No failures that caused leaks in the liquid metal system occurred after the pump cell was redesigned as a consequence of two failures during the first thousand hours of operation. Some loss in performance occurred as a consequence of oxidation of the leads at temperatures above 1000°F.

Electrodynamic Pumps (Rotating Magnet)

System	Operating Time (hr)
Forced convection boiling potassium systems	16,000
Small potassium system	4,000
Total	20,000

No failures caused leaks in the liquid metal system after the pump cell was redesigned following an early failure. The longest period without serious trouble with the rotor bearings was 2,300 hr.

[redacted]

Table 21. Summary of Operating Experience with Bellows Seal Valves

(a) ORNL Experience with Valves in Alkali Metal In the Period 1961 Through 1965

System	Number of Leaks to Atmosphere Through Bellows	Number of Failures[a] in Stem Mechanism	Type of Valve that Failed	Number of Valves per System	Hours of System Operation	Valve Operating Hours	Remarks
IPS (Boiling K)	0	2	Hoke, except for 2 Mason-Neilan	35	~3,000	105,000	All valves are operable at this date. At least two valves have leakage across seat when closed.
SPS-1 (Boiling K)	0	5[b]	Hoke 4 – HV473 and 1 – TY445	6 primary valves sizes 3/8 – 1/2	~4,000. Average life of valves that failed – 2500 to 3000 hr	24,000	One valve presently in system leaks across seat.
SPS-2 (Boiling K)	0	1	Hoke	47[c]	~1,500	70,000	Two valves in system presently are leaking across seat.
SNAP-8 (NaK)	4[d]	4	1402 Series Hoke which were bought for ANP	7[e]	25,000[f]	175,000	
SNAP-50 Loop (NaK)	0	0	Hoke HV-473 and one TY-445	10	~5,000	50,000	

[a]Failures where valve had to be repaired or replaced.

[b]Four bonnets repaired. One valve removed because of leakage across seat. All five valves removed from system.

[c]Including sample system valves.

[d]Valves that failed operated for 480, 1300, 1600, and 5880, respectively.

[e]Thirteen loops were operated, each having seven valves. One loop operated for 5880 hr before one of the valves failed.

[f]Total operating time for all loops.

(b) Oak Ridge Gaseous Diffusion Plant Experience with 930 Valves

Year	1955	1956	1957	1958	1959	1960	1961	1962	1963	1964	1965	Total
Number of bellows failures	55	22	16	7	7	10	14	41	23	37	19	251
Number of failures of stem mechanism	6	0	22	8	14	1	0	4	3	3	6	67

[redacted]

in a leak to atmosphere and those in which there was some difficulty with sticking. Virtually all of these valves were located in the lower temperature portions of the systems. Only three of those in Table 21-a have been operated routinely at temperatures above 1200°F; the bulk have been operated in zones that ran from 600 to 1000°F. None of these valves was subject to continuous operation by automatic process control action.

The lower portion of Table 21 summarizes some 10^8 valve operating hours of experience with valves that were continuously subject to control action by automatic process control equipment in the Oak Ridge Gaseous Diffusion Plant. The difficulties cited in the stem mechanism involved only sticking in the valves; they do not include difficulties with the mechanical operator. All of the valves were run within 200°F of room temperature. Since the plant has been run continuously, the number of hours lost through outages is a small fraction of the number of hours per year.

Additional data on valve operating experience in the Gaseous Diffusion Plant were obtained for earlier years, but these were not included because the incidence of failures was 10 to 100 times greater than for the period covered by Table 21-b. The high failure rate during the early years was corrected by revisions in the design of the valves or in the installation, and hence there are no infant mortality failures included in Table 21-b.

Bellows Expansion Tanks

The only data that appear to be available on bellows expansion tanks are those obtained by Atomics International in the course of the mercury Rankine cycle improvement program.[32] Tests of about a dozen units indicate a mean time to failure of the bellows of about 3000 hr with no instance in which a bellows has been operated for more than 6500 hr without a failure.

Major factors affecting the life of bellows in either valves or expansion tanks are the number of actuation cycles, the number of thermal cycles, and the amplitude of the cycles. The valves in the ORNL tests were subject to relatively few actuation cycles with a somewhat larger

number of thermal cycles. The valves in the gaseous diffusion plant were subject to large numbers of actuation cycles with only a little very mild thermal cycling.

Electric Heaters

Table 22 summarizes over 300,000 hr of ORNL experience with 1/2-in.-diam Firerod electric heaters immersed in potassium in the 1200 to 1600°F temperature range.[33] The data indicate a mean time to failure of about 2500 hr for the lowest heater output range of the table (most of these heaters ran at 2 to 3 kw). A diligent effort to improve the quality control and the fabrication processes will, it is believed, lead to an improvement in the mean time to failure by about a factor of 2 in the coming year.

Reactor Control Drive Mechanisms

Experience with the control rod mechanisms for the ORR over a period of about eight years provides some interesting and useful reliability data. The six identical control rod mechanisms installed when the reactor was built gave a moderate amount of trouble over a period of about five years. Most of this trouble took the form of sluggish or false scram action rather than failure to operate. The difficulties were diagnosed, new rod drives were designed and built, and the redesigned mechanisms were installed in all six positions of the ORR during the summer of 1964. These have functioned for 18 months without an instance of misoperation. This corresponds to a total of more than 60,000 rod drive operating hours without a failure. This experience indicates that the probability of failure is less than 2×10^{-5} per rod drive operating hour.

Instruments

Typical ORNL experience bearing on the reliability of the primary sensors used on high temperature (above 1000°F) liquid metal and molten salt systems is summarized in Table 23. This includes only complete failures of the sensors. No attempt was made to evaluate the degradation of instrument systems or the failure of readout equipment. In all cases,

Table 22. Summary of ORNL Operating Experience With Firerod Electric Heaters Run in Boiling Potassium

Hours of Operation	Number of Heaters		Heater Power					
			Less Than 4 kw		4 to 5 kw		5 to 7 kw	
	Total	Failed	Total	Failures	Total	Failures	Total	Failures
Over 8000	1	1			1	1		
6000 to 7000	1	1			1	1		
5000 to 6000	1	1			1	1		
4000 to 5000	2	1					2	1
3000 to 4000	2	2					2	2
2000 to 3000	77	28	71	27	1		5	1
1000 to 2000	26	15	10	3	7	4	9	8
500 to 1000	18	6	1	1	9	1	8	4
Less than 500	159	39	134	32	5	1	20	6
Total	254	94	216	63	25	9	46	22

[redacted]

Table 23. Summary of Instrument Operating Experience in Some Typical High Temperature Liquid Systems

Test	Hours of Operation[a]	Level Elements			Pressure Transmitters			Magnetic Flowmeters		
		No.	Failures	Total Inst. Hrs.	No.	Failures	Total Inst. Hrs.	No.	Failures	Total Inst. Hrs.
Boiling Potassium Forced Convection Loops										
Loop No. 1	3,000	1	0	3,000	3	0	9,000	1	0	3,000
Loop No. 2	750	1	0	750	3	0	2,250	1	0	750
Loop No. 3	2,611	1	0	2,611	3	0	7,833	1	0	2,611
Loop No. 4	1,895	1	0	1,895	3	0	5,685	1	0	1,895
Loop No. 5	4,500	1	0	4,500	3	0	4,500	1	0	4,500
Loop No. 7	3,300	1	0	3,300	3	0	9,900	1	0	3,300
Large Molten Salt Pump Test Loops										
Test No. 1	12,000	–	–		3	–	36,000	–[e]		
Test No. 2	20,000	–	–		3	1[c]	60,000	–[e]		
Test No. 3	10,000	1[b]	–		3	–	30,000	–[e]		
Test No. 4	25,000	–	–		3	–	75,000	–[e]		
Small Potassium Systems										
No. 1	6,000	4	0	24,000	5	0[d]	30,000	2	0	12,000
No. 2	1,200	6	0	7,200	2	0	2,400	1	0	1,200
Intermediate Potassium System	2,800	7	0	19,600	4	1[c]	11,200	4	0	11,200
SNAP-50 Radiator Loop	5,000	3	0	15,000				3	0	15,000
SNAP-8 NaK Loops	25,000	7	0	42,000				10	1	60,000
EM Pump Test Rig	3,500	1	0	3,500				1	0	3,500
Total	93,056	35	0	127,356	39	2	283,768	27	1	118,956

[a] Loop at temperature but not necessarily full operation, e.g. boiling.

[b] Float type level element as used on MSRE.

[c] Elements failed to respond. In both cases, the process connection was plugged.

[d] Two PMD's failed in this loop when they were overheated with the loop evacuated.

[e] Two of the PMD's are used in conjunction with a venturi to measure flow.

[f] The pump test loops circulate molten salt.

[redacted]

only those instruments which were properly installed and had operated at least 200 hr were considered. No failure was charged if a failure resulted from an operational error or physical damage.

PMD's (pressure measuring devices) manufactured by the Taylor Instrument Company have been used by ORNL for 10 years. These units are supplied as indicators or with strain gage electrical output and pneumatic output. They can be used to measure absolute, gage, and differential pressure. The failures that were found did not seem to be a function of any of these factors.

Recently, ORNL purchased several pressure transmitters from the Foxboro Instrument Company. Five of these units have operated in the Intermediate Potassium Loop for 2800 hr without failure. The Foxboro transmitters are limited to 400°F operating temperature.

There have been several generations of level elements at ORNL, the progression being from the "J" tubes to "I" tubes with current modifications being designated "H" tubes and "M" tubes. Those listed in the table are both "J" and "I" types which are single elements. The "M" and "H" types employ two "I" tubes with electrical interconnections on a single level measurement. Therefore, the new units would have a reliability of one-half of that of the "I" tubes.

These elements are currently available with an active length of 6 in. to 4 ft and have been used to measure differential pressure by measuring the level in a liquid metal manometer.

The flow rate of high temperature liquid metals has been measured by three different methods at ORNL. The most common instrument, the magnetic flowmeter, is listed in the table of operating experience. The other two methods employ a flow restrictor and either a differential pressure transmitter or a liquid level manometer. Operating experience on both devices is limited. However, the differential pressure transmitter should have the reliability of 2 PMD's. The liquid level manometer, when properly designed and installed, would be a simple level element.

A device to sense the speed of the turbine pumps in the Intermediate Potassium Loop has been tested. One unit ran for 2000 hr at 700°F and then failed. Another has run for 2000 hr at 600°F and is about to fail.

The manufacturer had rated these units for 5000 hr at 1000°F. However, this seems overly optimistic. Development of these devices continues.

Mechanical Reliability of the Fluid Systems

Establishing meaningful estimates of the reliability of a Rankine cycle space power system is a most difficult task because experience with the unique components required is small compared with the required high reliability for long periods of operation (> 10,000 hr) without maintenance. Because of this, most space power plant reliability studies to date have consisted of selecting a target for the overall mission reliability and then arbitrarily assigning a set of individual component reliabilities that would make it possible to achieve this goal. This type of analysis is of value in establishing development goals, but it is not very helpful in comparing various systems.

For the purposes of this study, it seemed better to derive component reliabilities from the statistical data presented in the previous section and employ these component reliabilities to assess the reliability of the various systems being compared in this study. This appears to be a valid approach because the reliabilities found for the special purpose components operated in high temperature liquid metals are within a factor of 10 to 100 of similar well developed industrial components operated near room temperature, hence interpolation between the two appears to be reasonable. Further, since most of the components in the various systems under consideration are similar, the failure rate for a component such as a pump should be the same irrespective of the particular system in which it may be used. Thus the relative reliability of the various systems can be assessed even though the absolute values used for the components are approximations. Table 24 was prepared in this way to show the probability of a failure in the principal mechanical components. The reliability values given are for the components themselves, and do not include the effects of malfunctions or failures in the electrical power supply, instrumentation, or control equipment. These are treated in a later section.

Table 24. Estimated Probability of Outages Caused by Mechanical Components in the Course of 10,000 hr of Operation of Systems Designed to Produce 367 kwe

(Does not include failures of instrumentation, control, or electric power systems)

System Number		1 and 2		3		4		5		6	
Type of Failure	Failure Rate	Number of Components	Probability of Outage	Number of Components	Probability of Outage	Number of Components	Probability of Outage	Number of Components	Probability of Outage	Number of Components	Probability of Outage
Leaks, in welds	10^{-9}/weld	500	0.005	1000	0.010	600+600*	0.006	1000	0.010	1000+600*	0.010
meteoroid punctures	(see p. 47)		0.001		0.001		0.0001		0.001		0.0001
in tubes	10^{-10}/ft	1000	0.001	2000	0.002	1000+1000	0.001	2000	0.002	2000+1000	0.002
Turbine driven pump	10^{-6}/pump	1	0.010	2	0.020	1	0.010	1	0.010	1	0.010
Electric motor driven pumps											
Temp. > 1800°F	10^{-5}/pump							1	0.100	1	0.100
Temp. < 1300°F	$3x10^{-6}$/pump					4	0.014	1	0.030	4	0.014
Main turbine	$3x10^{-6}$/turbine	1	0.030	1	0.030	1	0.030	1	0.030	1	0.030
Generator	$3x10^{-6}$/generator	1	0.030	1	0.030	1	0.030	1	0.030	1	0.030
Accumulator											
(no control device)	10^{-7}/unit	1	0.001	1	0.001	1	0.001				
(control device required)	$3x10^{-8}$/unit			1	0.030	4	0.014	3	0.090	3+4	0.104
Jet pumps	10^{-7}	6	0.006	2	0.002	8	0.004	2	0.002	4	0.004
Valves											
Fill (leaks to space)	10^{-6}/valve	2	0.020	4	0.040	2+8	0.026	4	0.040	4+8	0.046
Control (leaks to space)	$3x10^{-6}$/valve			2	0.060			2	0.060	2	0.060
(sticking in valve)	10^{-6}/valve			2	0.020			2	0.020	2	0.020
(operator)	$3x10^{-6}$/drive			2	0.060			2	0.060	2	0.060
Reactor control drives	$3x10^{-6}$/drive	4	0.014	4	0.014	4	0.014	4	0.014	4	0.014
			0.118 (0.098)**		0.320 (0.220)		0.150 (0.124)		0.499 (0.399)		0.504 (0.398)
System Reliability			0.888 (0.907)**		0.726 (0.802)		0.861 (0.883)		0.607 (0.671)		0.604 (0.672)

*Components in series plus redundant components.

**Value obtained by eliminating valve leaks to space.

In preparing Table 24 the principal components in the system were listed in the first column, and a failure rate was estimated from the data in the previous section and listed in a second column. The failure rate from each type of component was then calculated for each of the systems of Figs. 1 through 6 and listed in the columns to the right. The rationale used in estimating a reasonably consistent set of failure rates for the various components is summarized in the subsections below.

Leaks

The incidence of leaks in welds was estimated from the data on fuel elements, as was the incidence of leaks in tubes. In both instances excellent quality control measures were assumed. Experience with stainless steel encapsulated-UO_2 fuel elements for water-cooled reactors has demonstrated that one vendor has obtained over 500 x 10^6 fuel element operating hours without a failure.[3] Further, 30,000 similar fuel elements have operated at around 1200°F in a gas-cooled reactor for over 10,000 hr without a single detectable leak.[3] Since there is a weld at each end of each fuel element, this gives over 10^9 weld operating hours without a failure.

The fuel element experience indicates a similar integrity for the tube wall for thicknesses from 0.015 in. to 0.020 in. Since wall thicknesses about double this would be used in the outer envelope of a space power plant, the probability of a leak through the tube wall should be still lower – a value of 10^{-10} per foot of tubing seemed in order.

While the temperatures in a space power plant would be higher, the ratio of operating stress to the allowable stress would be kept the same or lower than in the fuel elements cited for water- and gas-cooled reactors.

The incidence of leaks caused by meteoroids as calculated in a previous section was taken as 0.001 for the direct condensers and 0.01 for the indirect radiators.

No allowance was included for leaks in the regenerative feed heaters partly because the ground rules give a probability of such a leak of less than 0.001, and partly because if such a leak were to develop it would be internal and would probably lead to only a slight loss in performance.

Pumps

As will be shown in the next section, the circulating pumps are perhaps the most vital components in the system from the hazards standpoint, and hence deserve particular attention. In appraising the data available, the two most significant pieces of information appear to be the reliability data for electric motors obtained from the Oak Ridge Gaseous Diffusion Plant, and the ORNL experience with high-temperature centrifugal pumps. The former set of data indicates that the incidence of failures in well developed commerical electric motors operating near room temperature can be kept to around 10^{-6} per operating hour, while the ORNL pump test data indicates that this degree of reliability can be approached in high-temperature liquid pumps (the component reliabilities given here are for the component itself — not for the power supply or control equipment).

The electric-motor-driven pumps for NaK circuits in the systems of Figs. 1 through 6 were considered first. Not only is the electric-motor-driven pump considerably more complicated and therefore subject to more failure modes than a conventional electric motor (see Table 25), but the large temperature differentials within the pump lead to thermal strain cycles and thermal distortion effects that are particularly likely to give difficulty with the bore seal and the ceramic insulation for the windings. It appears that the extra complexity introduced by the requirement for a bore seal in a canned rotor pump, the ceramic insulation and the high temperature of the windings, the need to use a liquid metal to lubricate the bearings, and the much smaller background of operating experience that could possibly be accumulated for so specialized a component as a circulating pump for a space power plant will lead to a failure rate at least several times that of the best electric motors of Table 19. Thus a failure rate of 3×10^{-6} per pump operating hour was taken as being as low as one might reasonably hope to achieve.

There seems little likelihood that the curie point of the magnetic materials used in the generator or motors can be raised much above 1000 to 1200°F. Design studies indicate that allowances for temperature drops through the various parts coupled with contact resistances are large and

Table 25. Failure Modes of Pumps

Free-Turbine-Driven Feed Pump (Maximum Operating Δt – 600°F)	Primary Electric Motor Driven Pump (Maximum Operating Δt – 1300°F)
Bearing failures	Bearing failures
Impeller failure	Impeller failure (2)
Turbine wheel failure	Motor rotor failure
Casing leaks (40 in. welds)	Casing leaks (160 in. welds)
	Dynamic seals (2)
	Thermal insulation between pump and motor
	Bore seal
	Windings – insulation failure

lead to the conclusion that the temperature of the coolant for the stator ought not exceed about 600°F. As a consequence, in the NaK circulating pumps for the indirect radiator circuits, the difference between the pump temperature (which will be about 1200°F) and the motor coolant temperature (approximately 600°F) will be about 600°F. In electric-motor-driven pumps for the reactor coolant circuit, fluid will enter the pumps at about 1900°F, giving a temperature difference between the motor windings and the pump casing of 1300°F. This will greatly increase thermal stress cycling effects, thermal distortion, and, consequently, the probability of a failure. For the purposes of this study, it seemed reasonable to assume that the incidence of failure would be increased by a factor of about 3 in the higher temperature units, hence the component failure rate for the primary circuit pumps was taken as 10^{-5} per pump operating hour.

Operating experience with free-turbine-driven feed pumps with potassium-lubricated bearings is limited to that obtained during the past year at ORNL. While this experience is encouraging in that a pump has been operated without difficulty for over 2500 hr after a correction of bearing difficulties which showed up in the initial run of 18 hr, far more operating experience must be obtained before there will be a

statistically significant basis for estimating the failure rate of this component. However, for the purposes of this study, it appeared that a significant estimate of the failure rate relative to that of electric-motor-driven NaK pumps could be made by comparing the failure modes to be expected in the two components. This has been done in Table 25. The items common to the two units were listed first, followed by those items peculiar to one or the other of the two types of pump. In view of the large number of components in the motor-driven pump together with their greater sensitivity to thermal stresses and thermal cycling, it appeared that the component failure rate for the free-turbine-driven pump should be lower by at least a factor of 3.

Turbine-Generator

In estimating the failure rates for the main turbine and generator, it appeared in order to use the value chosen for the electric-motor-driven pumps (as developed above). In view of the larger size, the greater complexity, the higher temperature, the greater temperature differences, and the higher bearing loads inherent in the main turbine relative to the turbine-pump unit, it appears that the failure rate would be increased by a factor of approximately 3. This reasoning leads to values of 3×10^{-6} failures per operating hour for the turbine and the same value for the generator.

Valves

Experience at the Oak Ridge Gaseous Diffusion Plant, as summarized in Table 21-b, indicates that the incidence of sticking within the valves was about 10^{-6} per valve operating hour even with well developed commercial components in a relatively benign atmosphere. ORNL experience with valves in high-temperature liquid systems as summarized in Table 21-a indicates that sticking of the stem mechanism in infrequently operated high-temperature valves has been a serious problem, with failure rates of the order of 3×10^{-5} failures per valve operating hour. For the purposes of this study, it was assumed that sticking troubles in the two valves required in each loop for filling operations could be ignored,

and that the failure rates for sticking of the process control valves could be reduced to the diffusion plant value.

ORNL experience indicates that leaks in the bellows seals for the stems of infrequently operated valves are less likely than sticking of the operating mechanism, and that the failure rate is 10^{-5} per valve operating hour for leaks in the bellows of infrequently operated high-temperature valves. This compares well with the diffusion plant data which indicate a failure rate of 3×10^{-6} per valve operating hour for low-temperature control valves. It is believed that an improvement in the reliability can be made with careful design, installation, and development work, and that in valves for liquid metal services the bellows failure rate may possibly be reduced to 10^{-6} failures per valve operating hour for infrequently operated valves, and to 3×10^{-6} for valves continuously subjected to control action.

Accumulators

In view of the long history of difficulty with bellows in high-temperature zones as derived from experience with bellows seal valves and accumulators (as outlined in the previous section), it seemed best to base the reliability analysis on the premise that a bellows-type liquid accumulator would not be used in any of the systems, but that the design of the accumulator would be based either on capillary forces or on fluid dynamic forces in a tank in which the liquid would be swirled. The reliability of such expansion tanks will depend on possible difficulties with deposits, provisions for pressurizing, or provisions for maintaining the spacing of plates intended to give the desired capillary action. Since there has never been any difficulty with an expansion tank in ORNL high-temperature test rig experience, it is believed that the reliability of these units can be very high, with that for the dynamic expansion tank approaching the reliability of a heat exchanger with ten tube-to-header joints. Because of the greater sensitivity of a capillary expansion tank to possible difficulties with plate spacing as a consequence of thermal distortion and warping, its reliability would probably be a factor of 10 lower than that of the dynamic accumulator.

Jet Pumps

ORNL operating experience with liquid metal jet pumps totals only 18,000 jet-pump operating hours -- not nearly enough to constitute a basis for making a reliability estimate. However, the components are inherently so simple and are subject to only one failure mode -- plugging -- that it appears that, in a system in which mass transfer is a trivial problem, there should be no difficulty with these units. Hence, the incidence of failure should be exceedingly low, and was taken as 10^{-7}.

Reactor Control Drives and Control Valve Operators

The ORR control drive experience cited in the previous section is for a water-cooled reactor in which all parts are at or near room temperature for an application requiring a fairly fast scram action. The higher bearing loads implied by the latter constitute something like as difficult an obstacle to high reliability as the high-temperatures and vacuum of a space power plant installation.

The low incidence of complete failure to operate during the first five years of ORR operation coupled with the complete absence of trouble once the design defects were corrected indicates that the failure rate will prove to be lower than 10^{-6} per drive operating hour.

Test and development work to date on the MPRE control system has included fabrication and testing of two prototype mechanical drive systems which have been cycled at room temperature through about 2000 cycles, at least 100 times the number to be expected in the life of a space power plant. No component or system failure has been experienced.

It appears that the incidence of failures to be expected in the control plug drive mechanism of the reactors of Table 24 can be kept low by designing for a low rubbing velocity and light loads. The principal problem will be to so choose the materials that self-welding will not occur in space. It is believed that, by proper design and choice of materials, a component failure rate similar to that estimated for electric-motor-driven NaK pumps -- i.e., 3×10^{-6} per drive mechanism operating hour -- will be achievable, and this value was used in Table 24.

Overall Incidence of Mechanical Failures

Using the component failure rates summarized in Table 24, the reliability of the systems of Figs. 1 through 6 was estimated. In doing this, allowances were made for redundancy of the reactor control drives and the indirect radiator circuits by considering a failure serious only if two of the four parallel components were to become inoperative as a consequence of failures of the component in question. For example, for the electric motor-driven NaK pumps in the radiator circuits, the component failure rate of 3×10^{-6} was multiplied by the period of operation (10,000 hr), the number of pumps in the four circuits (four), and the product squared. This is equivalent to saying that the failure of one pump would be considered acceptable, but that the failure of two NaK pumps should be considered serious. The same rationale was used for the other elements in the NaK circuits and for the control plug drives. (This assumes that the control system will be designed so that it will continue to operate even if one of the four independent plug drive mechanisms were to stick.)

Where there are a number of components any one of which would cause an outage of the system (e.g., the two pumps of system 3), their probabilities for producing an outage were simply added.

The sum of the failure rates for the major components of a given power plant gives an indication of its reliability. While somewhat different values might have been used for the component failure rates, it is believed that the relative mechanical reliability of the various systems would not be greatly different from that indicated in Table 24. It must be emphasized that Table 24 is only for the mechanical reliability of the major components; it does not include any allowances for the difficulties with the instrumentation, control, or electric power supply and distribution systems, including the power supplies for the electric-motor-driven pumps. These problems are treated in a later section.

In examining the fine structure of Table 24, it is evident that the principal sources of trouble are the generator, electric-motor-driven pumps, control valves, and provisions for accumulators in once-through

boilers. These suggest that, if a 2-loop system is deemed essential because of hazards considerations, system 3 would be attractive from the reliability standpoint if a recirculating boiler similar to that of systems 1, 2, and 4 were employed.

4. RELIABILITY OF INSTRUMENTATION AND CONTROL EQUIPMENT

In attempting to compare the reliability of the control equipment for the systems of Figs. 1 through 6 on a consistent basis, it seemed best to delineate the control functions, outline the principal failure modes and hazards problems, summarize the instrumentation requirements using a set of design precepts applicable to all six systems, review the data available on the reliability of components of electronic equipment, and then employ this information to assess the relative reliability of the control systems for the various power plants of concern in this study.

Basic Control Functions for Normal Operation

The survey of system requirements presented in Ref. 1 indicates that, for power outputs of 100 kw(e) to 5 Mw(e), the control system should be designed so that the reactor will operate at reduced power when the electrical load is reduced. CANEL reached this conclusion in the latter stages of their effort, but retained a small parasitic electrical load to reduce swings in voltage or frequency in the course of electrical load transients. In view of the poor reliability of electric heaters immersed in high-temperature liquid metal as indicated by the data presented in Table 22, and in view of the indications from the survey of Ref. 1 that substantial voltage and frequency swings could be tolerated in the course of load transients, it appears best to eliminate a parasitic electrical load from the power plant control system. The survey of Ref. 1 also indicated that restoration of voltage and frequency to design values in the course of a load transient need not be accomplished quickly – a period of a minute or more to re-establish equilibrium would be acceptable.

Boiler Control

Because of thermodynamic, fluid flow, and control considerations, it appears best to control the turbine output in all cases by operating the Rankine cycle system with no vapor throttle valve at the turbine inlet and with the boiler outlet pressure essentially proportional to the thermal

output of the reactor. (This approach has been followed in the MPRE,[34] SNAP-8,[9] and SNAP-50.[35])

One of the most complex and difficult problems in the control of a boiler is the maintenance of the proper liquid inventory in the system. In recirculating boilers for conventional steam power plants, it has been the practice to sense the liquid level in the main steam drum and use it to control the boiler feed flow rate by varying either the speed of the boiler feed pump or a throttle valve in the line between the feed pump and the boiler. Because of time lags and system stability considerations, it has been found necessary to meter the steam flow leaving the boiler and use that signal to modulate the control action. This arrangement has been known as a three-element boiler feed control system. Other controls are also required in the power plant; for example, the boiler pressure is maintained constant by varying the firing rate to the furnace, and the turbine speed is held constant by varying the position of throttle valves at the turbine inlet.

Experience with once-through boilers in conventional steam plants has shown that they pose a more difficult set of problems. There is no liquid level that can be measured in the boiler to determine whether the liquid inventory distribution in the system is proper; instead it is necessary to measure the amount of superheat in the exit vapor. Operating experience has shown that, to obtain reasonably stable power plant operation, it is necessary to resort to a system of electronic "black boxes" which regulate the major quantities according to a set of schedules. The resulting arrangement is much more complex than for a recirculating boiler, and the load range over which it has been found practicable to operate the system with automatic controls is much reduced, usually running only over the range from about 50% to full power in central stations. It is, of course, necessary to go through a low-power regime during startup or shutdown, but this is done with much intervention on the part of the operators to maintain conditions within acceptable limits.

The recirculating boiler system of the MPRE has been designed to give a set of system characteristics such that the liquid inventory distribution is inherently stable and within acceptable limits over a wide range of power outputs without requiring any instrumentation or control equipment.[34]

The efficacy of this approach has been demonstrated by operation of large test rigs.[36]

The once-through boiler systems present a much more complex set of problems. A review of stationary power plant experience, work on the SNAP-2 and SNAP-8 programs, and work on the SNAP-50 program coupled with an effort at ORNL to find some better approach indicates that it will probably not be possible to find an arrangement simpler than that given by two continuously controllable valves, one between the feed pump and the boiler and the other either between the expansion tank and the feed pump inlet or between the condenser and the feed pump inlet. These valves must be coupled through some sort of electronic or servo equipment to maintain a certain scheduled relationship between the principal parameters of the Rankine cycle system, including in particular the liquid inventory. While other arrangements may be made, e.g., a "pressurizer" can be used, these are no less complex and are likely to give poorer stability and control characteristics. (A pressurizer requires electric heaters with a set of controls to hold the pressurizer tank within a narrow scheduled temperature range.)

Condenser Temperature Control

In conventional steam power plants there is no need to control the condenser temperature because on the one hand the temperature of the available cooling water supply is beyond control and on the other hand the lower the condenser temperature the higher the thermal efficiency of the power plant. The systems are designed so that the static head of the liquid in the hot well will be sufficient to provide cavitation suppression head for the condenser scavenging pump irrespective of condenser pressure. In a space power plant designed for zero-g operation, however, the situation is complicated by the fact that cavitation suppression head for the condenser scavenging jet pump can be obtained only by subcooling the condensate leaving the condenser. This means that the absolute pressure in the condenser must not be allowed to drop below a level such that a reasonable amount of subcooling of the condensate will suffice to provide the cavitation suppression head required for the condenser scavenging

pump. This, in turn, means that – with unshuttered direct condensers – the power must not be allowed to drop below a level such that the above requirement can be satisfied, or – with indirect condensers – the liquid circuit to the radiators must be equipped with control devices to maintain the condenser temperature within the proper range.

The problems involved are illustrated by Fig. 18 which shows the results of an analysis carried out for the single-loop system of the MPRE. The upper curve shows the turbine inlet temperature, while a second curve below and roughly parallel to it shows the turbine outlet temperature. Immediately below the turbine outlet temperature curve is a third curve which defines the maximum radiator inlet temperature for sonic velocity into the radiator tubes. The reason for this is that, as the vapor temperature of potassium is reduced, the specific volume of the saturated vapor increases very rapidly so that the volume flow rate of vapor for a given weight flow quickly leads to choking at restricted points in the inlet vapor passages when the condenser temperature is reduced. Immediately beneath this curve is a fourth curve delineating the minimum radiator outlet temperature for which provision can readily be made for sufficient subcooling to suppress cavitation at the inlet to the condenser scavenging pump. Below this is a curve which defines the ideal average radiator temperature that would prevail if no shutters were employed and the radiator run with a uniform temperature distribution with the heat rejection rate varying as the fourth power of the radiator surface temperature. Because of the flow restriction effects of sonic velocities at the inlet to the tubes, the condenser cannot run at a uniform temperature but rather the temperature will drop along the length of the tubes as a consequence of a series of oblique shocks. Consequently, the temperature at the tube inlets will be much above the average, while the temperature of the condensate leaving the radiator will be very much below the ideal average radiator temperature at any part-load condition below about 50% of the full-power output. The temperature at the condenser outlet would drop below the value required to suppress cavitation in the condenser scavenging pump so that it would not function properly, and the condenser would load up with liquid.

[redacted]

ORNL DWG. 66-1751

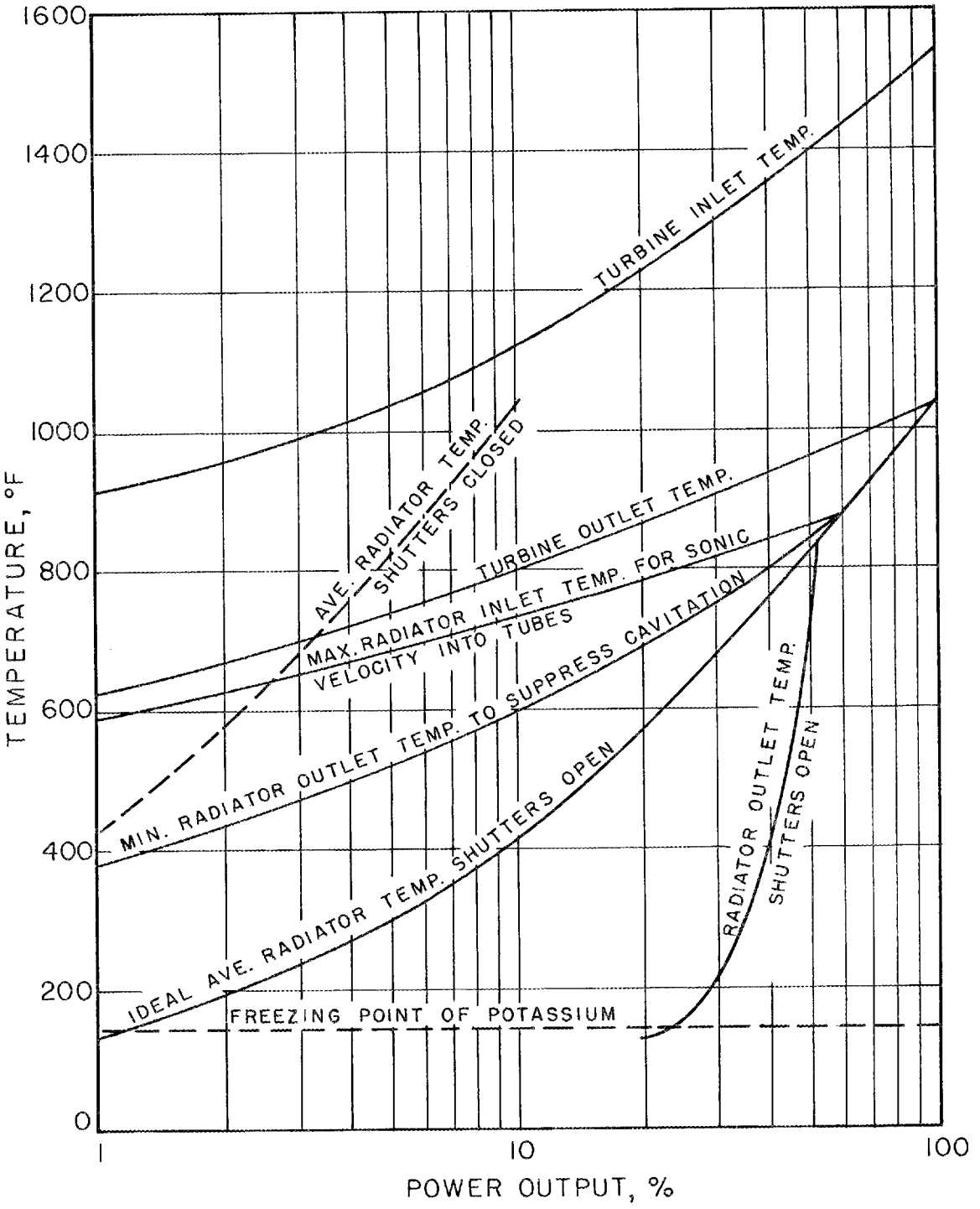

Figure 18. Effects of reactor power output on the temperatures at key points in the system of figure 1 as estimated for the MPRE for various modes of operation.

[redacted]

The dashed line across the bottom of Fig. 18 indicates the operational limitation imposed by the freezing point of potassium.

The basic problems outlined above are present in any Rankine cycle power plant. Where a gravitational or centrifugal field of 0.1-g or greater is available, the design can be such that a static head can be built up between the condenser outlet and the inlet to the condenser scavenging pump to suppress cavitation. (Only a few inches of static head will suffice to suppress cavitation in a jet pump at low outputs.) If a plant must operate under zero-g conditions, means must be provided in the power plant control system to keep the condenser pressure high enough so that enough cavitation suppression head for the condenser scavenging pump can be obtained by subcooling the condensate in the line between the condenser and the pump.

Radiator Temperature Control

If a direct condensing radiator is employed, means must be provided to hold its temperature within an acceptable range. One way to accomplish this is to provide shutters similar to those shown in Fig. 10-c. These shutters can be closed to interpose a thermal radiation heat shield between the radiator tubes and space and thus drastically reduce the heat losses at any given radiator temperature. A dashed curve has been superimposed at the left of Fig. 18 to show the average radiator temperature that would prevail if a set of shutters were provided and these were closed. It can be seen from these curves that the condenser temperature should be maintained somewhere between the minimum radiator outlet temperature to suppress cavitation and the turbine outlet temperature. Further, at any given power output there is a wide range of shutter openings that would be acceptable because the power plant operation would be insensitive to the condenser temperature as long as it fell between the turbine outlet temperature and the minimum temperature to suppress cavitation in the condenser scavenging pump.

A simple, rugged thermostat for controlling the position of each shutter blade can be obtained by mounting a long molybdenum rod ~0.15 in. OD on a fin. The refractory metal rod would be attached to the radiator

fin at one end and allowed to slide in ceramic bushings chosen to avoid trouble with galling or welding. Differential thermal expansion between the refractory metal rod and the stainless steel radiator tube will lead to a relative movement of about 1/2 in. at the free end of the rod. This movement can be used to actuate a linkage that will control the position of the shutter blade.

Shutters of this type are attractive not only because they afford a promising means of controlling the condenser temperature under part-load conditions, but also (as will be discussed in a later section on Startup) provide a nice solution to many of the startup problems. The radiators can be designed so that each tube will have its own independent shutter control, and the structural design of the radiators can be such that the misoperation of any individual shutter blade will not have any serious consequences so far as the radiator as a whole is concerned. Since it appears that the condenser will be insensitive to substantial deviations in shutter-blade opening from the desired mean, this approach to the control of the condenser temperature would provide a high level of reliability because of the extensive redundancy.

This system of shutters also looks attractive for indirect radiators because of startup and reliability considerations. The redundancy obtainable should give a much greater system reliability than could be obtained with the conventional bypass control valve for the liquid circuits of systems employing indirect radiators since it eliminates not only the controllable valve but also the need for electronic equipment to control it. Thus for the purposes of this study this method of condenser temperature control has been assumed for all six systems of Figs. 1 through 6.

Reactor Controls

In establishing the ground rules to be used in this comparison of the systems of Figs. 1 through 6, it seemed in order to require that in all systems the reactor output be controlled to provide the heat required by the boiler. In the recirculating boiler systems the reactor controls will respond to an error signal from the generator voltage and/or frequency, and the rate of change of reactivity will be low – of the order

of 2×10^{-5} $\Delta k/k$ per second. The simplest arrangement would be to let both the voltage and the frequency vary when the electrical load changed, and operate the control plugs to bring either the voltage or the frequency back to its proper range. This would keep both values within ±10% of the design value if step changes in the electrical load were limited to ±15%, as will probably be the case.[1] A somewhat more complex system could be used to maintain the frequency constant by varying the generator field strength and allowing the voltage to vary. Thus a step increase in load would be absorbed by allowing the voltage to drop throughout the system so that, in effect, the step change would be absorbed by the same sort of load sharing arrangement as is used in most electric power systems.[1] In either case the coupling between the error signal and the control plugs will simply act to bring the voltage and frequency back to the design values.

In the once-through boiler systems the reactor controls will respond to an error signal from the amount of superheating in the vapor leaving the boiler. The coupling will be complicated by requirements to match the reactor outlet temperature to a prescribed schedule that must be related to signals from other instrumentation in the system.

In all cases the reactivity will be controlled by movement of the end reflector with an end plug and drive mechanism similar to that employed for the MPRE.

To provide good system stability and control characteristics, the reactor will have a negative temperature coefficient of the order of 10^{-5} $\Delta k/k$ $°C^{-1}$, and will have small, negative power and void coefficients.

Electrically Driven Pumps

Power for the electric-motor-driven pumps will be supplied from solid-state power conversion equipment connected to the generator. This equipment will include its own voltage and frequency regulating circuits.

In the systems with indirect radiators for the main thermodynamic cycle, two sets of power conditioning equipment should be employed with each supplying power to the pumps in two of the radiator circuits.

For manned vehicle applications of liquid-cooled reactor systems, the best arrangement that could be devised to minimize the hazards associated

with a pump outage would be to provide one or two low-head electromagnetic pumps in series in the reactor cooling circuits. Each of these pumps would operate continuously throughout the life of the plant with power supplied from its own set of batteries. Each set of batteries would be continuously recharged through its own separate power conditioning equipment connected to the generator. Each of these electromagnetic pumps should have its own individual cooling circuit for the magnet windings, with an electromagnetic pump to circulate the coolant to a separate radiator in each instance. While this arrangement would increase the probability that a pump would be available to circulate liquid through the reactor, the large temperature differences between the windings and the pumped fluid would introduce thermal stress problems. A helical induction pump would be less subject to this sort of brouble, but it would require an inverter between the battery power supply and the pump, and this would seriously degrade the reliability of the system. Other factors that make the use of electromagnetic pumps a less than perfect solution are the requirements for a cooling circuit for the field coil with a pump, radiator, valves, expansion tank, and vital instrumentation. Because of all this, extra complication and weight allowances for pumps of this sort have not been included in any of the tables of this report.

Requirements for Electronic Equipment

Many of the control functions indicated by the above discussion will require electronic "black boxes" that will be integral elements of the power plant, and will be vital to its reliability. The basic control functions requiring electronic equipment are summarized in Table 26 for the systems of Figs. 1 through 6.

Failure Modes and Hazards Problems

The various types of failure that may occur in a space power plant may be divided into three major categories, i.e., those that result in a degradation in system performance or output, those that result in a

Table 26. Basic Control Functions Requiring the Continuous Action of Electronic Equipment for Normal Operation of the Power Plants of Figs. 1 Through 6

Boiling Reactor 1-Loop Systems 1 and 2	Boiling Reactor 2-Loop System 3	Boiling Reactor 2-Loop System 4	Liquid-Cooled Reactor Systems 5 and 6
Adjust position of control plugs to vary the reactor output to maintain the generator voltage and/or frequency within the desired range.	Adjust throttle valve in feed line to boiler to maintain the generator voltage and/or frequency within the desired range. Sense the temperature and superheat of the vapor leaving the boiler and adjust position of control plugs to vary the reactor output to maintain a scheduled reactor outlet temperature. Sense subcooling of condensate return from condenser and adjust device to control the liquid inventory distribution between the accumulator and the Rankine cycle.	Adjust position of control plugs to vary the reactor output to maintain the generator voltage and/or frequency within the desired range. Control the output of the electrical power supply for the electric motor-driven pumps to maintain the voltage and frequency within the desired range.	Adjust throttle valve in feed line to boiler to maintain the generator voltage and/or frequency within the desired range. Sense the temperature and superheat of the vapor leaving the boiler and adjust position of control plugs to vary the reactor output to maintain a scheduled reactor outlet temperature. Sense subcooling of condensate return from condenser and adjust device to control the liquid inventory distribution between the accumulator and the Rankine cycle. Control the output of the electrical power supply for the electric motor-driven pumps to maintain the voltage and frequency within desired range.

complete power outage, and those that would endanger the crew if the power plant were installed in a manned vehicle. It is also informative to categorize the various failures on the basis of the failure mode, i.e., the manner in which the failure develops. Table 27 has been prepared to relate the component failures considered in the previous section to the system failure modes and their consequences in terms of reduced system performance, complete power outage, or hazards.

An examination of Table 27 is informative. While provisions can be made in the design of a small reactor (about 1 Mw) to obtain heat losses from the reactor sufficiently high to remove the afterheat in the event of a loss of coolant flow through the core, in larger reactors thermal conduction effects would not be adequate to prevent excessive temperatures in the center of the reactor core and consequently excessive pressures and melting of the fuel elements would occur. If the loss of coolant flow through the core occurred as the result of a leak to space, fission products escaping from the melted fuel elements could escape through the leak and some fraction would deposit on the exterior of the spacecraft. Experience with Gemini 6 and 7 showed that clouding of the windows occurred as a consequence of the deposition of organic material from waste aqueous fluid emissions from the spacecraft. The volatility of these organic materials must have been much higher than that of most of the fission products that would be emitted from a melted fuel element, and hence there would be a much higher probability that fission products would stick to and form deposits on the surfaces of the spacecraft. Amounts far smaller than those sufficient to cloud a window would give excessive radiation doses to the crew.

If loss of coolant flow through the reactor were to occur as a consequence of a pump stoppage, and if there were no centrifugal field to provide a basis for natural thermal convection of the coolant, excessive temperatures would develop quickly in the center of the core, boiling of the coolant would occur, and – in a liquid-cooled reactor system – excessive pressures in the circuit would lead to a rupture in the primary cooling system. This would probably occur in the reactor vessel since it would be the hottest and weakest element in the system under these conditions. If the failure occurred when the reactor was running at a high

power output, even a prompt shutdown of the fission reaction would not prevent the afterheat from rupturing the pressure vessel in a matter of minutes.

To reduce the probability that afterheat will cause a reactor core meltdown in manned vehicles, it would be possible to employ a multiplicity of electric motor-driven pumps – perhaps two or three in parallel, each with its own independent power conditioning equipment. The latter could include switching devices to make use of battery power in the event of a power outage from the main generator. However, it is believed that any such arrangement would entail so much solid-state electronic equipment with provisions for switching from the generator to the batteries that the reliability would fall short of that required. It was for this reason that electromagnetic pumps for auxiliary circulation of the liquids in the key circuits was suggested in the previous section.

Note that, in addition to the mechanical failures summarized in Table 24, many types of failure that might occur as a consequence of malfunctions in the electric power supply, instrumentation, and controls have been included in Table 27. While – as will be discussed in a later section – the probability of these latter failures is generally much higher than for the mechanical components, so much detailed information is required to estimate them that numerical values were not included in the table.

Amount of Essential Instrumentation

The amount of essential instrumentation for each of the systems of Figs. 1 through 6 gives an indication of the complexity of the control system, hence it is important to review the instrumentation requirements. In addition to the instrumentation required to carry out the basic control functions required for normal operation as outlined above, sufficient instrumentation must be provided in power plants for both manned and unmanned vehicles to permit a reasonably good diagnosis of the principal malfunctions envisioned. In manned vehicles, the instrumentation and control system should be designed to provide warnings of incipient

Table 27. Principal Component Failures, Failure Modes, and Consequences of Failures

(a) Single-Loop System of Fig. 1

Failure Mode	Prime Cause of Failure	Incidence of Failures in 10,000 hr	Possible Consequences
Loss of reactor coolant flow	Pump malfunction Bearing failure Turbine wheel failure Rub between rotor and casing	0.01	Major fission product release unless fission reaction is promptly stopped and circulation maintained by thermal convection in a spun vehicle or by an auxiliary electromagnetic pump. Fission products would probably be confined within the power plant system.
	Radiator scavenging jet pump plugging	0.002	
	Boiler recirculating jet pump plugging	0.004	Plugging of one pump probably not serious, plugging of two would require reduced power, plugging of three would force a shutdown.
Loss of coolant	Loss of coolant inventory through a leak (including meteoroid punctures)	0.007	Major fission product release except in reactors of less than about 2 Mw(t) in which specific provision is made for substantial heat losses from reactor assembly by thermal radiation.
Loss of generator	Failure in windings (including bore seal) Bearing failure in turbine or generator Rotor rub in turbine or generator	0.06	Power outage
	Failure of field power supply	?	
	Failure of voltage and frequency regulator	?	
	Cooling system failure (including radiator)	0.002	
Reactor control drive malfunction	Control drive mechanism Motor failure Ball screw failure Warpage of plug guides and sticking	0.014	Some loss in reactor life as a consequence of the loss of the reactivity available in the failed control plugs.
	Electronic control equipment	?	
	Electrical power supply	?	
Fuel element clad failure	Weld defect or tubing defect	0.005	Power level reduced to 50% to 70% of design value to keep activity in radiator to acceptable level.

Table 27. (Continued)

(b) 2-Loop System of Fig. 3

Failure Mode	Prime Cause of Failure	Incidence of Failures in 10,000 hr	Possible Consequences
Loss of reactor coolant flow	Pump malfunction Bearing failure Turbine wheel failure Rubbing	0.01	Similar to same event in single-loop system except that fission products could not get into radiator.
Loss of reactor coolant	Boiler tube failure and system leaks	0.005	Similar to same event in single-loop system except fission products could not get into radiator.
Loss of power conversion fluid flow	Pump malfunction Bearing failure Turbine wheel failure Rubbing	0.01	Besides possible mission abort, main problem would be in shutdown heat removal from reactor. This would depend on provisions for and operation of backup pumps, spun vehicle, etc., or on the effectiveness of direct heat removal from core by radiation to space. Could result in major fission product release.
	Accumulator malfunction	0.03	
	Radiator jet pump plug	0.002	
	Valve failure	0.080	
	Control system malfunction	?	
Loss of power conversion fluid	System leaks (including meteoroid punctures)	0.113	Essentially same as loss of flow, above.
	Expansion tank failure	0.030	
Loss of generator output	Failure in windings (including bore seal) Bearing failure in turbine or generator Rotor rub in turbine or generator Failure of field power supply Failure of voltage and frequency regulator Cooling system failure (including radiator)	0.06	Power outage
Reactor control drive malfunction	Same as single fluid system	0.014	Some loss in reactor life as a consequence of the loss of the reactivity available in the failed control plugs.

[redacted]

Table 27. (Continued)

(c) 3-Loop System of Fig. 6

Failure Mode	Prime Cause of Failure	Incidence of Failures in 10,000 hr	Possible Consequences
Loss of reactor coolant flow	Pump malfunction		Similar to same event in single-loop system except circulation by thermal convection in a spun vehicle would not be as effective. Fission products could not escape into the radiator, but contamination of spacecraft exterior would be more likely.
	Bearing failure Bore seal failure Radiation baffles Dynamic seal failure	0.10	
	Motor coolant circuit	0.001	
	Accumulator malfunction	0.03	
	Electrical system failure		
	Main turbine-generator unit	?	
	Transformer	?	
	Frequency converter (including its cooling system, low-temperature radiator	?	
	Motor leads, switches, connectors, and controls	?	
Loss of reactor coolant	System leaks	0.118	Similar to same event in single-loop system except fission products could not excape directly into the radiator, but contamination of spacecraft exterior would be more likely.
	Expansion tank failure	0.001	
Loss of power conversion fluid flow	Pump malfunction		Besides possible mission abort, main problem would be in shutdown heat removal from reactor. This would depend on provision and operation of backup pumps, etc., or on the effectiveness of direct heat removal from core by radiation to space. Could result in major fission product release.
	Bearing failure Turbine wheel failure Rubbing	0.01	
	Condenser jet pumps (2) plugging	0.004	
	Accumulator malfunction	0.03	
	Control valve malfunction	0.04	
	Control system malfunction	?	
Loss of power conversion fluid	System leaks (including boiler tube failure)	0.118	Essentially same as loss of coolant flow, above.

[redacted]

Table 27. (Continued)

(c) 3-Loop System of Fig. 6 (Continued)

Failure Mode	Prime Cause of Failure	Incidence of Failures in 10,000 hr	Possible Consequences
Loss of radiator fluid (NaK) flow	NaK pump malfunction		Power reduction with partial loss of mission objectives.
	Bearing failure Canned rotor failure Rotor rubbing	0.12	
	Electrical system failure		
	Motor windings failure	?	
	Wiring, switches, connectors, and electrical control system failure	?	
	Motor coolant circuit failure		
	Piping and heat exchanger failure Auxiliary radiator failure	0.001	
	System leaks (including meteoroid puncture of radiator)	0.11	Power reduction with partial loss of mission objectives.
	Expansion tank failure	0.12	
Loss of generator output	Failure in windings (including bore seal) Bearing failure in turbine or generator Rotor rub in turbine or generator	0.06	
	Failure of field power supply	?	Power outage
	Failure of voltage and frequency regulator	?	
	Cooling system failure (including radiator)	0.002	
Reactor control drive malfunction	Control drive mechanism		Some loss in reactor life as a consequence of a loss in amount of reactivity available in remaining control plugs.
	Motor failure Ball screw failure Warpage of plug guides and sticking Electronic control equipment Electrical power supply	0.014	
Intermixing of fluids	Boiler tube failure	0.004	Inventory control problem may necessitate system shutdown. Also, heat transfer efficiency may be reduced.
	Condenser tube failure	0.004	Introduction of sodium into power conversion fluid will give liquid droplets in vapor leaving boiler and possibly turbine erosion. Will also change performance and probably require decreasing power level or system shutdown.

trouble for all major failure modes, and provisions should be made to initiate a reactor scram where this would be necessary to protect the crew or the power plant. The number of signals in the latter category should be kept to a minimum.

In establishing ground rules for estimating the amount of instrumentation it appears that, as a minimum, each fluid circuit (except those for cooling the windings of the electromagnetic pumps) should have a flowmeter, two pressure gages to indicate the pump pressure rise and system pressure level, and thermocouples to indicate the highest and lowest temperatures in the system. The circuits for the thermodynamic cycles should also include a gage to measure the boiler outlet pressure, since it will generally be substantially lower than the pump discharge pressure. The temperature of the field coil for each electric-motor-driven pump should be measured.

The instrumentation for each electromagnetic pump should include provisions for indicating the field winding temperature, the cooling circuit temperature rise, and the liquid inventory in the cooling circuit.

Instrumentation should be provided to indicate the state of charge of the battery supplies for the electromagnetic pumps and for the performance of the power conditioning equipment used for the electric-motor-driven pumps.

A speed indicator would be provided on each turbine, but, since the turbine-driven feed pumps can be designed so that a complete runaway will not damage the machine, only an overspeed of the main turbine-generator would be used to initiate a sharp setback in reactor power.

The liquid inventories in the reactor cooling circuit and in the thermodynamic cycle system are so important from the safety standpoint that a low inventory in either case would be cause for a sharp setback in power or a scram.

A loss in the output from the power conditioning equipment will lead to such serious trouble in systems No. 4, 5, and 6 that an indication of such a failure should initiate either a scram or a sharp setback in power.

Table 28 summarizes the number of quantities that must be measured according to the requirements outlined above. Note that two columns are given for each of the six power plants, one for the essential

Table 28. Vital Instrumentation for 1-, 2-, and 3-Loop Systems

	1 Single Loop with Boiler Jet Pump		2 Single Loop with Boiler Centrifugal Pump		3 2-Loop Boiling Reactor, Direct Condenser		4 2-Loop Boiling Reactor, Indirect Condenser		5 2-Loop Liquid-Cooled Reactor, Direct Condenser		6 3-Loop Liquid-Cooled Reactor, Indirect Condenser	
	Warning	Scram or Setback	Warning	Scram or Setback	Warning	Scram or Setback	Warning	Scram or Setback	Warning	Scram or Setback	Warning	Scram or Setback
Quantity:												
Flow	2	1	3	1	4	2	6	1	4	3	8	3
Pressure	3		3		5		11		6		14	
RPM	2	1	2	1	3	1	2	1	2	1	2	1
Liquid Inventory	2	1	2	1	3	2	6	1	5	1	9	2
Battery Charge	1		1		1		3		3		5	
Power Conditioning	0		0		0		4	2	2	1	4	2
Radiation Dose at Radiator	1		1		0		0		0		0	
Non-Thermocouple	11	3	12	3	16	5	32	5	22	6	42	8
Temperatures	12		13		15	1	32		23	1	43	1

instrumentation for diagnostic or normal control purposes, and one to indicate the number of signals or combinations of signals that would be needed to initiate a reactor scram or a drastic setback in power. In keeping with the design precepts outlined above, both were kept to a minimum. Flowmeters were included only in circuits in which a flow stoppage would quickly lead to a reactor meltdown if the reactor power were not immediately reduced. The less than perfect reliability of instrument pick-ups in the event of a false scram may lead to serious damage to the power plant. In view of the complexities in the possible courses of events, it will probably prove best to design the control system to give a scram or a sharp cutback in power only if pressure-drop indications are consistent with those from the flowmeters. This entails some further complication of the control functions.

Reliability of Components for Electronic Equipment

It is apparent from the pump test experience in Table 17 that all of the difficulties after the initial shakedown testing of the pumps were in the instrumentation, control, and electrical equipment rather than in the pump proper. Experience in other systems has commonly been similar. In the first army package power reactor, for example, over 300 vacuum tubes had to be replaced during the first year of operation.

The reliability problems in the missile program have led to some excellent work on the compilation of reliability data on electronic equipment. There are so many different components in electronic systems that only a few examples can be cited. Some indication of the reliability of complete standard commercial assemblies is given by a particular piece of ground-based radar identification equipment on which a thorough reliability study was carried out.[38] Figure 19 from that study shows the probability of survival of this equipment as determined from a large amount of operating data. The dotted curves were obtained by using the basic exponential relation normally used in reliability analyses. It is interesting to note that, as was found

[redacted]

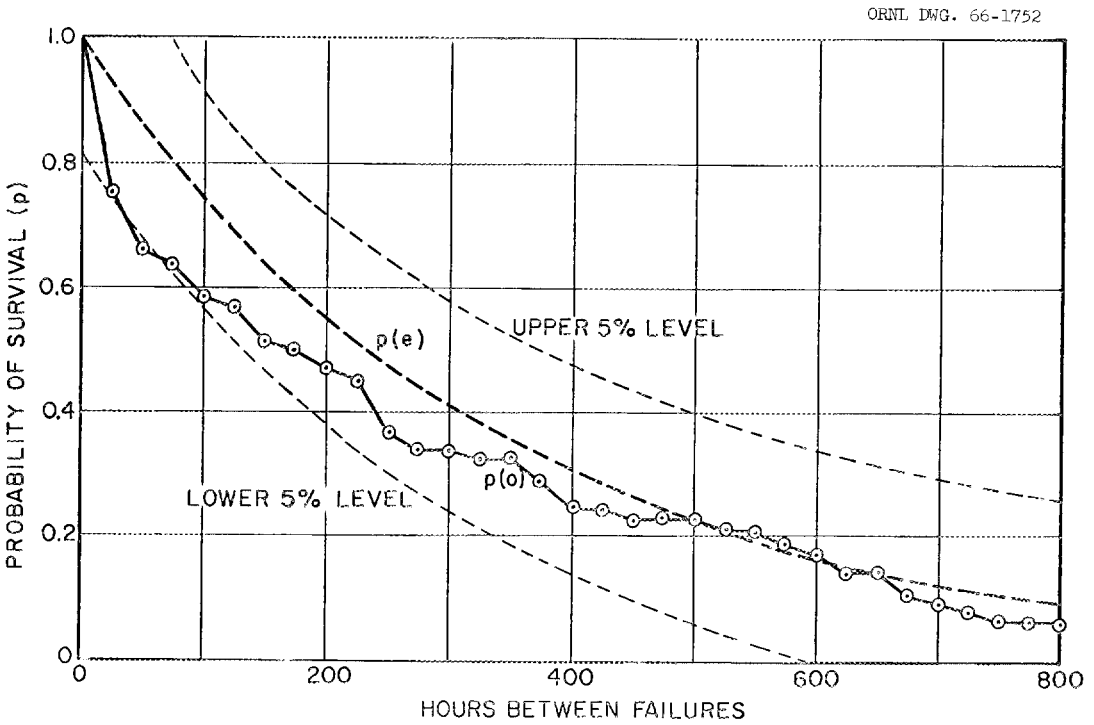

Figure 19. Curves showing the probability of operation without serious trouble of a ground-based search radar set. (Ref. 7.)

[redacted]

in the steam power plant study summarized on p. 81, this and related studies of electronic equipment showed about double the average incidence of failures during an initial shake-down period, followed by a fairly long operating period in which the failure rate was essentially uniform, followed in turn by a final period in which the incidence of failures increased as a consequence of wear and tear on the equipment.

Reliability studies on components for electronic equipment have shown that the most important factors are usually the operating temperature and the ratio of the operating wattage to the nominal rating for the item in question. Figure 5 shows a typical set of curves for accurate wire-wound resistors.[39] Essentially similar curves have been obtained for such items as geranium diodies, selenium rectifiers, ceramic capacitors, film resistors, and the like, the failure rate in the region below 80°C in no case being more than a factor of ten lower than that given by Fig. 20 for wire-wound resistors. The incidence of failures in pin connectors and relays was roughly similar – Fig. 21 shows the relation between failure rate and number of actuations per hour for switches and relays.[39] An intensive effort in the past five years has made it possible to reduce failure rates by a factor of about ten in components procured to meet new military specifications.[40] Failure rates as low as 0.001% in 1000 hr have been obtained in some components made to special Air Force specifications for the Minuteman Program,[41] but Figs. 20 and 21 are still reasonably typical of commercial equipment.

Overall Reliability of the Complete Power Plant

While it is not possible at this stage to establish absolute values for the reliability of each of the six systems of Figs. 1 through 6, the information presented in the preceding sections indicates that meaningful estimates of the relative reliabilities can be made. From the estimates of Table 24 and 27 it seems clear that the incidence of mechanical failures will increase approximately linearly with the number of loops in the system so that the probability that

ORNL DWG. 66-1753

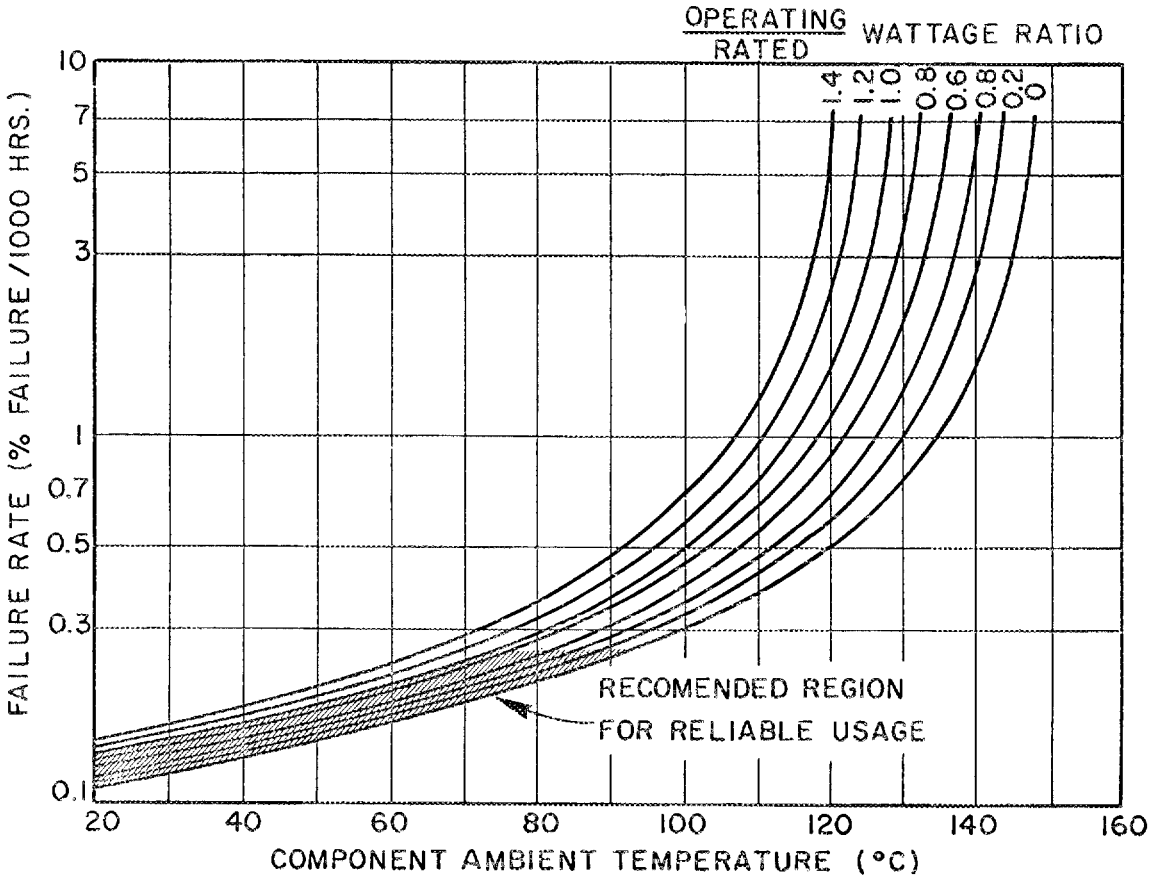

Figure 20. Effects of operating temperature and wattage on the predicted failure rate for accurate wire-wound resistors. (Ref. 8.)

[redacted]

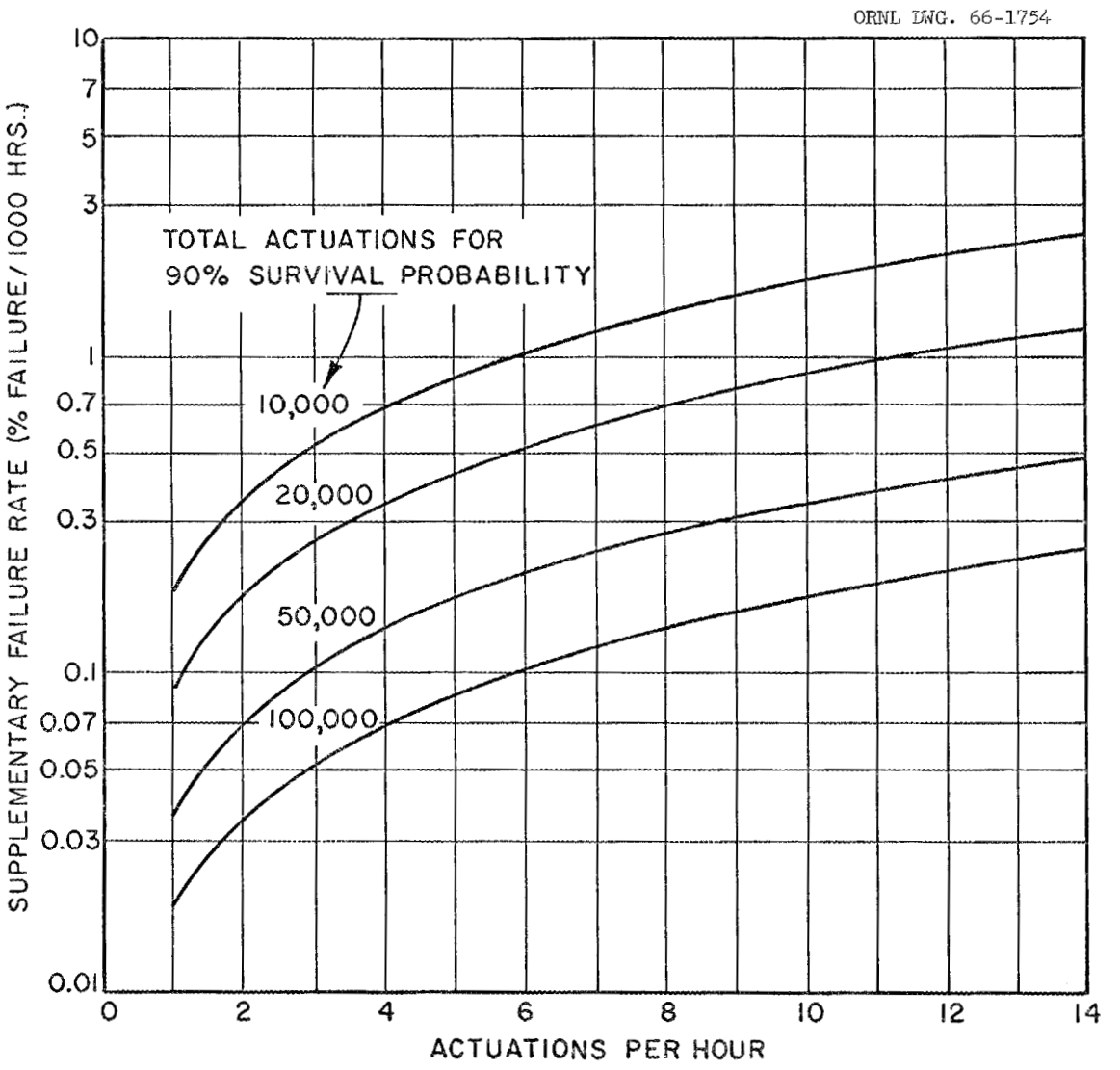

Figure 21. Predicted failure rates for switches and relays. (Ref. 8.)

[redacted]

a single-loop system will run 10,000 hr without a mechanical failure might be around 0.90, whereas the same data indicate that the corresponding values for 2-loop and 3-loop systems would be roughly 0.80 and 0.60, respectively.

The number of components and the number of control functions both increase with the number of loops. Further, a perusal of Tables 26, 27, and 28 shows that the number of abnormal combinations of conditions and hence failure modes increases rapidly with the complexity of the power plant. While it is less obvious, the difficulty in discriminating between tolerable abnormalities and those abnormal combinations that demand drastic action becomes progressively more difficult at a rate that increases exponentially with increasing complexity of the power plant. As a consequence, the number of electronic components in the control system goes up rapidly and the reliability falls off in a corresponding fashion. As a consequence, malfunctions in the instrumentation and control equipment will lead to a much higher incidence of outages than will stem from mechanical failures, and the incidence of these failures in the electrical and control circuitry will increase much more rapidly than linearly with the number of loops. Extensive experience indicates that it will be exceedingly difficult to achieve a 0.90 probability that the control equipment for a 1-loop plant will operate unattended for 10,000 hr. The information available implies that, because of the much greater complexity, the corresponding value for a multi-loop system would be much lower -- probably less than 0.20 for a 3-loop system.

Effects of Electric-Motor-Driven Pumps

In examining the reliability data to focus attention on the more vulnerable components, it is clear that electric-motor-driven pumps severely degrade the reliability of any system in which they are used. Not only is there a substantial probability of a failure within the motor-driven-pump unit itself, but system operating experience indicates that the probability of a failure in the power supply, switch gear, or control equipment is even higher, making the overall probability

of a pump outage unacceptably high. This is serious because a flow stoppage in either the reactor coolant circuit or the thermodynamic cycle may initiate a chain of events that will release large quantities of fission products to space, and this would lead to the deposition of substantial amounts of radioactive material all over the spacecraft. The results could be disastrous if a crew were present. While auxiliary or backup power systems may be used with any given electric-motor-driven pump, and a number of pumps may be used in series or parallel, the added complexity of the additional electrical equipment – including switch gear and instrumentation – and the extra cooling systems required for the windings of the electric motors make it doubtful that the overall reliability of the complex can be raised sufficiently to give a system with the required reliability.

Effects of Electronic Equipment

As indicated in the previous section, ample statistical data have been accumulated in the missile and space programs on the reliability of components such as resistors, capacitors, transistors, switches, etc. for electronic systems, and these data have been organized into straight-forward tables by the Department of Defense. Thus, if detailed circuit diagrams are available, it is possible to make a sound prediction of the reliability of a piece of high quality electrical or electronic equipment if the operating temperatures and electric loads on the various components can be specified. In attempting to analyze a typical piece of electronic equipment for this study, the reliability of the simplest circuit that could be found for a voltage regulator-generator exciter for a space power plant was examined. This unit employs some 85 components such as resistors and silicon controlled rectifiers. The probability of surviving for 10,000 hr as determined from DOD tables for component reliability was found to be 0.58 – an unacceptably low value. Through the use of redundancy and much derating of components, it appears possible to increase the reliability of such a circuit so that the probability of surviving for 10,000 hr might be increased to as much as 90% or 95%, a barely acceptable value.

A survey of the electronic circuitry required to carry out the control functions of Table 26 for normal operation of the once-through boiler systems of Figs. 3, 5, and 6 indicates that the complexity of the electronic equipment required for these systems will be far greater than that of the voltage regulator cited above, and will approach or exceed the complexity of the radar equipment of Fig. 19. Thus it appears unlikely that any power plant of this complexity can be built to operate unattended for 10,000 hr with a reliability high enough to be acceptable for unmanned space missions. Extensive use of redundancy and derated components would help, but it would not solve the problem because these remedial measures complicate the circuits and afford additional unanticipated modes of failure (such as the failure of the voltage regulator in the SNAP 10A in orbit and the widespread power outage in the Northeast in November 1965). Thus an estimate of the reliability of a complex control system including all possible failure modes is very difficult to make even though a wealth of data are available on the reliability of the basic components. While maintenance of the electronic equipment in manned missions would give a marked improvement in reliability, this maintenance would require highly skilled personnel, would be expensive indeed, and still might not be adequate to avoid serious damage to the system as a consequence of some chain of events initiated by a failure in an electronic component.

Some indication of the seriousness of this problem is given by the experience with package power reactor systems (pressurized water reactor-steam plants) used at Camp Century in Greenland and McMurdo Sound in Antartica. These have required operating crews of 25 to 30 men in five to eight man shifts for round-the-clock operations. The expense of maintaining these crews has proved to be so great that the military services have decided not to procure more of these plants until lower initial and operating costs can be achieved. This experience indicates that reliability should be a major consideration in the choice of a power plant just from the standpoint of the operating crew required.

An indication that a single-loop system can be built and operated with little attention is given by a recent test in which a reduced scale electrically heated mock-up of the MPRE was operated for over 2500 hr with only a 2-man crew during the day shift and no crew through the nights and weekends.[42] No difficulty was experienced except with the electric heaters, the electric power supply, and the related in-instrumentation and control equipment.

Instrument Pickups

A major factor affecting system reliability is the reliability of the individual pickups in the instrumentation called for by Table 28. Test experience indicates that the reliability of the sensitive elements of these pickups leaves much to be desired — enough so that redundancy in the instrumentation is essential. This is easily accomplished for the thermocouples, since the sensitive elements are simple, light, and compact. Unfortunately, many of the flowmeters, pressure gages, and speed indicators currently available require cooling a portion of the component to a temperature level of 1000°F or less. Hence, new equipment must be developed or the installation of these items will be subject to many limitations. Further, they are bulky and heavy. Rather than install a multiplicity of these units, it may be better to provide coincidence circuits so that a scram or drastic set-back would require simultaneous signals from at least two indications of trouble, e.g., pressure and flow or pressure rise and pump speed.

Hazards Considerations for Manned Vehicle Installations

For manned vehicles, the information in the preceding sections implies that adequate protection against a major fission product release to space as a consequence of flow stoppage in the reactor circuit can be provided only by using a vehicle that is spun to provide a centrifugal field. With proper design such an arrangement would provide

a high level of assurance that coolant circulation through the core would be maintained by natural thermal convection in a boiling potassium reactor. The head that could be made available to provide thermal convection in a liquid-cooled reactor would be much lower than in a boiling reactor. By opening up the coolant passages throughout the system including the core and by proper disposition of equipment it would probably prove possible to provide for afterheat removal from a liquid-cooled reactor in a 1/6-g to 1/2-g field. In any case, the vehicle could be designed so that, in the very unlikely event of a coolant leak from the reactor system, the vehicle spin velocity could be reduced to a low level and the power plant jettisoned to avoid exposing the crew to a serious radiation hazard.

If hazards considerations lead to the conclusion that a 2-loop system is essential to isolate the reactor from the thermodynamic cycle, it appears that the most reliable 2-loop power plant would be one similar to that of Fig. 3 but with a recirculating boiler and vapor separator in place of the once-through boiler shown for the main Rankine cycle. While such a recirculating boiler raises the same problems as the MPRE relative to the control of free-liquid surfaces under zero-g conditions, if these can be solved it would make it possible to employ a set of control equipment that would begin to approach the simplicity and reliability of that projected for the MPRE.

5. ZERO-GRAVITY PROBLEMS

The difficulty of controlling free-liquid surfaces under zero-g conditions was recognized at the inception of the studies that led to the initiation of the MPRE program, and a small continuing effort on these problems has been carried forward. However, directives from the Atomic Energy Commission clearly gave this a very low priority, and only a few experiments were conducted.[43,44] With the change in jurisdiction for the MPRE program in July, 1965, the ORNL effort in this area has been increased, and a report has been prepared to outline both the basic problems and a test program that appears to be promising.[45] This section presents a brief review of the problems of controlling the free-liquid surfaces in the six different systems of this study.

Systems Using Once-Through Boilers Coupled to Liquid-Cooled Reactors

The control of free-liquid surfaces under zero-g conditions has appeared so formidable that some have felt that only the Rankine cycle of Fig. 6 could be considered. The velocities through the boiler would be sufficiently high that the control of the free-liquid surfaces should not be a problem, and the system design would be such that a high pressure drop would not be objectionable. The 2- and 3-loop systems of Figs. 5 and 6 are typical of the systems that result from this design philosophy. There is no choice in these systems but to live with free-liquid surfaces in the condenser, but a number of zero-g tests in aircraft indicate that this is feasible.

Provision for thermal expansion is clearly required in any all-liquid circuit because the alkali metals expand about 20% for a temperature increase of 1000°F. Further, both analog and test work has shown that an expansion tank in the Rankine cycle system is essential.[32,35] To avoid a free-liquid surface in these components, designers have made use of a bellows-type of an accumulator. As indicated earlier

in the report, reliability considerations appear to rule out this "easy" solution to the problems of controlling the free-liquid surface in the expansion tank.

Boiling Reactor Systems

As shown in the previous sections of this report, the multiloop systems lead to serious performance and reliability penalties. These are avoided in the system of Fig. 1 by accepting the difficult development problems associated with controlling the free-liquid surfaces in the vapor separator-expansion tank region. While system 1 also has the problem of developing a low pressure drop boiler in which boiling flow stability is more likely to be a problem than a high pressure drop once-through boiler, this could be avoided through the use of systems 2 or 3.

The problems of free-liquid-surface control in the boiler are intimately associated with boiling flow stability. A substantial background of experience has been accumulated at ORNL to show that, with suitable nucleation devices, good flow stability with excellent flow distribution can be obtained under 1-g conditions with full allowances for variations in the radial power distribution and hot channel effects.[46] A small 7-rod water boiler unit has been built with nucleation rings at the inlet designed as "hydraulic check valves" to give double the press drop for reverse flow as for forward flow. This has been operated satisfactorily both nearly horizontal and upside down, and the flow has been stable. Flight tests to investigate its behavior under zero-g conditions are planned for the spring of 1966. In these tests the effects of design parameters will be investigated including the use of textured surfaces designed to take advantage of capillary effects to help distribute the liquid film, and divergence of the coolant passages in the direction of flow to introduce an effect that should contribute to stabilization of the flow.

The use of an accumulator employing bellows has been avoided in the systems of Figs. 1, 2, and 4. The vapor separator and expansion

tank combination assumed for these recirculating boilers makes use of fluid dynamic forces including a substantial swirl in the expansion tank to stabilize the free-liquid surfaces. A small unit of this type has been flight tested with encouraging results,[44] and flight tests of a larger unit (about half the scale of the MPRE) are planned for March, 1966.

The feasibility of controlling the free-liquid surfaces in a direct condensing radiator with a large number of tapered tubes operating in parallel has been investigated by operating seven direct condensing radiators of this type with the tube axes horizontal or nearly horizontal. Some have permitted direct viewing of the liquid flow. These tests have been conducted with both steam and potassium vapor; the condensers have operated as predicted, the flow distribution has been uniform, and the liquid holdup in the condenser has been limited to a thin liquid film on the walls coupled with liquid slugs in the last few inches of the tube immediately ahead of the condensate outlet manifold. A transparent condenser of this type with eight parallel passages has been built and operated in the Laboratory. Flight tests are planned.

The free-liquid surfaces in these condensers are controlled by making use of tapered tubes which maintain a high vapor velocity throughout the length of each tube so that drag forces between the vapor and the liquid film on the tube walls serve to keep the film moving at a sufficient rate so that its thickness is of the order of 5 to 10 mils. Subcooling between the condenser outlet and the condenser scavenging jet pump is employed to maintain cavitation suppression head. Analytical work indicates that the flow distribution should be good, and the flow through the system should be stable. About 10,000 hr of ground test work with both water and potassium support this conclusion.

6. STARTUP PROCEDURES

A variety of startup procedures have been proposed by Atomics International, CANEL, Aerojet, and ORNL for typical space power plants. Each of these involves a preheating phase which may be accomplished by any of several means including chemical fuel, preheating of the system prior to launch, electrical heat, solar heat, or nuclear heat from the reactor. This would be followed by a series of operations culminating with connection of the generator to the electrical system. So many different approaches might be employed that it appears best to consider first a proposed startup procedure that has been worked out for the MPRE, then examine the applicability of this to the multi-loop systems, and finally compare the resulting startup procedures with others that have been proposed.

Proposed Startup Procedure for the MPRE

Preheating:

A promising approach to the preheating operation is to make use of shutters not only on the radiator but also between the external surface of the shield and the space enclosed by the radiator (see Fig. 16). The latter set of shutters would be designed to open at temperatures below about 500°F so that heat conducted from the surface of the reactor assembly to the outer surface of the shield will be emitted to the interior of the radiator enclosure. As outlined in the section on condenser temperature control, the shutters on the radiator would remain closed until the radiator tube temperature rose above about 500°F. With this approach the heat losses from the complete power plant assembly can be kept to something of the order of 3 kw for an average assembly surface temperature of 150°F if gold-plated shutters are employed. Thus the system could be heated by increasing the power gradually to about 3 kw (t) with no potassium in the system. If the preheating were started with the system cold, the thermal inertia

would be so great that it would take about 100 hr for the temperature of the power plant assembly to rise to the equilibrium values indicated in Table 29. At this juncture all parts of the fluid system would be well above the melting point of the potassium.

Table 29. Equilibrium Conditions After Preheating Prior to Start-up of the 2.2 Mw (t) Power Plant of Fig. 16

Radiator surface area, ft^2	500
Shutter emissivity (each surface)	0.02
Reactor thermal output, Kw	3
Btu/hr	10,000
Surface heat flux, Btu/hr-ft^2	20
Shutter temperature, °R	910
Reflector emissivity	0.04
Radiant heat transmission factor	0.013
Reflector temperature, °R	1120
Shield surface emissivity	0.90
Shield surface area, ft^2	100
Shield surface heat flux, Btu/hr-ft^2	100
Radiant heat transmission factor	0.17
Shield surface temperature, °R	1260
Radiator tube temperature, °R	1020
Turbine-generator temperature, °R	1160
Reactor pressure vessel temperature, °R	1460
Reactor core central temperature, °R	1860

Starting the Boiler in a Spinning Vehicle

If the system were mounted in a spinning space station so that the centrifugal field would be available to give an artificial gravitational field the system could be filled with potassium and the start-up procedure could be essentially similar to that employed for the ORNL test rigs.

This entails filling the boiler with the proper amount of potassium when the temperature of the system is above about 200°F. The boiler power can then be increased gradually, vapor condenses in the radiator, and the potassium refluxes by natural convection as a consequence of the large difference in density between the vapor in the

riser to the condenser and the liquid in the condensate return lines. The power can be increased gradually or rapidly until the turbine-pump unit starts. This has been accomplished many times in a few minutes in water systems. To date 10 min or more have been taken for this step in potassium systems, but there appears to be no reason why it could not be accomplished more rapidly.

Starting the Boiler Under Zero-g Conditions

If the power plant were static under zero-g conditions, a promising approach appears to begin injecting potassium into the reactor core inlet at a rate such that the exit vapor quality will run around 1%. The strong wetting characteristics of the potassium, possibly aided by a textured surface on the fuel elements, would distribute the potassium fairly well throughout the core. The potassium would be preheated with the rest of the power plant. The fill tank would be located so that its temperature would be close to the reactor temperature to minimize thermal stresses during the injection operation. Boiling would start as soon as the potassium reached the reactor core, and vapor would be evolved. Because of the fairly strong negative temperature coefficient, the cooling of the reactor core associated with boiling of the potassium would lead to an increase in reactivity, and hence an increase in reactor power sufficient to hold the mean fuel temperature nearly constant. The potassium injection rate would be scheduled to increase in a manner such that a low vapor quality would be maintained at the core outlet while the power would increase from about 3 kw to perhaps 50 kw in about 2 min, by which point the free-turbine-driven feed pump should start.

It is possible that sufficient potassium vapor from the boiler would condense in the turbine casing and be drawn into the bearings by capillary action to provide lubrication before the rotor would start to turn, but it would probably be better to begin to provide a positive supply of potassium to the bearings when liquid potassium injection to the boiler is initiated. While there would probably be a substantial amount of liquid carried with the vapor through the vapor separator

during the first minute or two, the total amount of liquid injected to the boiler in the first 2 min would not run much more than the liquid inventory required to fill the condensate return and boiler feed lines. By the end of 2 min of injection normal operation of the feed pump should begin.

If desired, a small, low head, electromagnetic pump might be located just downstream of the radiator scavenging jet pump to act as a check valve to prevent the priming charge from entering the radiator, and to assure a small driving force to scavenge liquid from the condenser and move it into the centrifugal pump during the initial phases of the start. It is likely that this would not be necessary because capillary forces acting on the free liquid surface in the tapered tubes near the outlets would start the liquid moving toward the radiator scavenging jet pumps.

The jet pumps scavenging the radiator would not, of course, begin to work until the turbine pump had started to discharge liquid. This could not occur until liquid had filled the lines from the radiator to the centrifugal pump and from the centrifugal feed pump to the jet pump.

To assure filling of these lines it will be necessary to provide gaps in the shutters at the bottom of the power plant package and arrange the reflective insulation in that region so that the condensate return piping will reach an equilibrium temperature of 100°F to 200°F below that of the condenser and other parts of the system before the beginning of injection. Thus the higher vapor pressures both in the condenser and in the boiler would act to fill the condensate return lines with liquid. By proper design of the fluid flow passages so that they will act as hydraulic check valves (i.e., have a greater pressure drop for back flow than for forward flow) it appears possible to obtain satisfactory filling of the liquid lines without the use of valves.

Starting the Turbine-Generator

The greater mass of the rotor for the turbine generator coupled with magnetic forces will keep it from starting until the boiler power output is increased substantially beyond that required to start the turbine-pump unit. Consequently, start-up of the turbine-generator

can be deferred until the fluid system has been monitored thoroughly to make certain that the reactor, turbine-pump, condenser, etc. are functioning properly. The boiler power can then be increased until the turbine-generator unit starts, and increased further until it is brought to the desired speed. The reactor operation up to this point would be based on a neutron flux signal, but control would now be transferred to equipment designed to hold the generator output voltage and/or frequency constant as outlined in Section 4.

Connecting the Generator to the Load

On completion of the above operations the generator would be coupled to the electrical distribution system of the spacecraft and the load increased gradually by switching on first one and then another component of the electrical load.

Comparison of Start-up Problems for Typical Systems

Since it is tedious to follow through the details of the start-up procedure for each of the six systems of this study, it seems best to consider just two - the single-loop system of Fig. 1 and the 3-loop system of Fig. 6. To this end the steps in a zero-g start-up of the MPRE presented above have been taken as typical of single-loop systems and are summarized in Table 30. Table 31 summarizes the corresponding steps required to start up a 3-loop system following a procedure similar to the latest outlined by CANEL[35] except where simplifications implicit in this study (such as thermostatically controlled radiator shutters) could be included.

It is evident that the programming equipment required for the 3-loop system is much more involved than that required for a single-loop system. All of the five steps required for the single-loop system have essentially identical counterparts in the procedure for the 3-loop system, and the latter has seven additional steps that have no counterparts in the single-loop system.

The procedure for starting up the single-loop system of Fig. 2 would be the same as given in Table 30.

The procedure for the 2-loop boiling reactor system of Fig. 3 would be a bit complicated. The preheating of the system, filling of the reactor circuit, and starting of the reactor circuit pump would be similar to steps 1 and 2 of Table 30. The balance of the procedure would be similar to that of Table 31, from step 6 on except for step 11, giving a total of eight steps. (Note that a recirculating rather than a once-through boiler would eliminate two of these.) The procedure for starting the 2-loop system of Fig. 4 would be similar to that of Table 30 except that steps 4 and 5 of Table 31 would also be required, giving a total of seven steps.

The procedure for starting up the 2-loop liquid-cooled reactor system of Fig. 5 would be similar to that outlined in Table 31 except that steps 4 and 5 would be eliminated and step 7 would be simplified by the use of a direct condensing radiator.

Table 30. Zero-g Start-up Procedures for the MPRE

1. Start reactor with the potassium system dry and the power plant at 60°F. Increase the power to about 3 kw in a period of about 1 hr using neutron flux as the basis for control. About 100 hr will be required to heat the power plant to equilibrium where the temperature distribution will be about as indicated in Table 29.
2. Begin injecting potassium to the reactor core inlet plenum with the injection rate scheduled to begin at 0.01 lb/sec and rise to 0.4 lb/sec at the end of 2 min. (The reactor control plugs would not move because the temperature coefficient would act to increase the reactor power sufficiently to hold the mean core temperature constant at about 1100°F.) The turbine driven feed pump would start after about 2 min from the beginning of the injection. Temperatures would be allowed to stabilize for about 20 min with the reactor at constant power and the turbine-pump unit operating.
3. Increase the reactor power and outlet temperature about 50°F at which point the turbine-generator should start to rotate, and then increase it further until the generator reaches the proper speed. (At this point the reactor would be at about 15% of design output.

Table 30. (continued)

4. Switch the reactor control from a scheduled neutron flux to equipment designed to maintain a constant generator frequency.
5. Connect the generator to the electric power distribution system.

Table 31. Zero-g Start-up Procedure for the 3-Loop System of Fig. 6, 2.2 Mw(t)

1. Start reactor with the potassium system dry and the power plant at 60°F. Increase the power to about 3 kw in a period of about 1 hr using neutron flux as the basis for control. After about 100 hr the system temperatures will reach equilibrium at which point the temperature distribution will be similar to that shown in Table 29 except that the radiator temperature would be about 200°F lower.
2. Fill the reactor fluid circuit.
3. Start the reactor circuit pump and begin circulating the reactor coolant.
4. Fill the radiator fluid circuits.
5. Start the pumps in the radiator fluid circuits.
6. Increase the reactor power to bring the reactor coolant outlet temperature to the proper value for starting the boiler.
7. Begin injecting potassium into the boiler at a rate scheduled to increase from an initial rate of about 0.002 lb/sec to about 0.10 lb/sec after 2 min. This should start the free turbine-driven feed pump. Begin operating the equipment designed to maintain the proper liquid inventory in the Rankine cycle system.
8. Switch the reactor control from a neutron flux schedule to a schedule based on the amount of superheat in the vapor leaving the boiler.
9. Increase the boiler output until the turbine-generator starts, and then increase it further until the generator reaches the proper speed.
10. Switch in the control equipment designed to actuate the throttle valve in the boiler feed line and thus adjust the boiler output to hold the generator output voltage and/or frequency constant.
11. One at a time switch the electric motor driven pumps from their battery-inverter power supplies to the generator.
12. Connect the generator to the electric power distribution system.

Comparison with CANEL Startup Procedures

The primary difference in the procedure for a 3-loop system startup of Table 31 and one suggested by CANEL,[7] is that in the CANEL sequence the electric motor driven pumps are started at the initiation of the actual startup sequence. This entails the use of a 150 kw-hr separate power supply (~25% used for the power conversion loop pump) and shut-off valves in the bearing feed lines to the turbine-generator unit and at the condenser outlet. Also a prelaunch system heating scheme is proposed but obviously is of no use for a re-start. Precharging of the reactor coolant loop and the radiator NaK loop is adopted, although this too may not be acceptable for the re-start case.

While the sequence proposed by CANEL could have been adopted in lieu of Table 31, i.e., potassium vapor could be injected to the pump turbine for startup before bringing up the reactor power, it was felt that a better system reliability could be achieved by eliminating the valves, particularly for the zero-g re-start case. In both cases it is recognized that the startup procedures as outlined are somewhat oversimplified in that such "small" intermediate steps as verification of temperatures, etc., and the other indications of the satisfactory completion of the previous steps are omitted. It is also important to realize that at the current state of zero-g system experience the above procedures should be viewed as possibilities only and are subject to change as more knowledge is developed.

7. MAJOR PROBLEM AREAS

Each of the systems considered in this study involves problem areas that could prove so difficult as to make a truly operational system unattainable. It appears in order to list these major problem areas together with others that appear to be extremely important.

General Problems Involving All Systems

1. The reliability of the electronic control equipment inherently required for normal operation of 2-, and 3-loop systems as determined by applying Department of Defense tables for the reliability of electronic components may be too low to be acceptable. (The circuit diagrams used in any such analysis should be for systems for which there is at least sufficient data to have permitted the construction and operation of an electrical analog to provide a basis for the design of the circuit diagrams. The analysis should include the instrumentation required to provide the necessary input to the electronic equipment.)

2. The extent to which mass transfer and corrosion may present problems in boiling potassium systems has not yet been demonstrated by 10,000 hr endurance tests with either stainless steel in the 1500°F to 1600°F range or with refractory metal in the 2000°F range. (To be significant the systems should include bearings lubricated with potassium, and should have surface-volume ratios and temperature distributions similar to those of a full-scale space power plant as well as all types of materials normally required.)

3. The effects on mass transfer and corrosion of the use of stainless steel in the condenser of a potassium system with a 2000°F refractory metal boiler has yet to be demonstrated by a 10,000 hr endurance test.

4. The feasibility of building and operating a generator with potassium-lubricated bearings and potassium-cooled windings has yet to be demonstrated by a long endurance test.

5. The reliability of free-turbine-driven centrifugal feed pumps employing potassium-lubricated bearings has been demonstrated by only one 2500 hr test.

6. The feasibility of using thermostatically controlled shutters on a space radiator to maintain the condenser temperature within acceptable limits and the reliability of the mechanism required has yet to be demonstrated experimentally.

7. The effects of design parameters on the cavitation performance of jet pumps operating in potassium have not yet been investigated.

8. The limitations imposed on the design of centrifugal and jet pumps by the possibilities of cavitation damage are not yet well defined.

9. The effects of tapered passages and hydraulic check valves on the flow stability of boilers requires further investigation.

10. The flow distribution and flow stability in multiple passage condensers under zero-g conditions has not been definitively demonstrated.

11. The control of free-liquid surfaces in expansion tanks under zero-g conditions by spinning the liquid inventory may introduce serious problems when the tank is incorporated in a system.

Systems Employing Once-Through Boilers

12. The control of once-through boiler systems requires complex electronic equipment that appears to have an unacceptably low reliability.

13. The reliability of throttle valves including the actuating mechanism appears to be unacceptably low.

14. The reliability of liquid accumulators, particularly those employing bellows appears to be unacceptably low.

Liquid-Cooled Reactor Systems

15. The reliability of electric motor-driven canned rotor pumps for handling 1900°F liquid metal appears to be unacceptably low.

16. Afterheat removal in the event of accidents presents major problems.

17. The reliability of liquid accumulators employing bellows appears to be unacceptably low.

Single-Loop Systems

19. The flow distribution and flow stability in relatively low pressure drop multiple passage recirculating boilers may not be satisfactory under zero-g conditions.

20. The feasibility of starting a recirculating boiler following a procedure similar to that outlined in the previous section has yet to be demonstrated. (This work should include an investigation of the effects of textured surfaces designed to take advantage of capillary effects.)

21. The burnout heat flux limitations in boiling potassium-cooled reactors is only sketchily defined. (To do this in the 2000°F range will require the development of a suitable refractory metal electric heater rod.)

22. The amount of fission product contamination to be expected in the radiator of a single-loop system if a fuel element leak were to develop has not been well established experimentally. (This could be done by running a deliberately defected fuel element in boiling potassium in-pile.)

23. The amount of activity that might be carried from the reactor core to the condenser of a single loop system as a consequence of mass transfer has not been established experimentally. (This could be done by running a small potassium system with Firerods that have been activated by neutron irradiation.)

REFERENCES

1. A. P. Fraas, Survey of Operating Conditions and Requirements for Nuclear Reactor Turbine-Generator Space Power Plants for the 1970-1985 Period, USAEC Report ORNL-TM-1364, Oak Ridge National Laboratory, January 1966.

2. S. C. Weaver and J. L. Scott, Comparison of Reactor Fuels for High Temperature Applications, USAEC Report ORNL-TM-1360, Oak Ridge National Laboratory, Dec. 30, 1965.

3. G. Samuels, Fuel Element Design for Boiling Potassium Reactors, USAEC Report ORNL-TM-1344, Oak Ridge National Laboratory, January 1966.

4. J. Michel and A. M. Perry, Design Study of Boiling Potassium Reactors for Thermal Outputs of 1 Mw to 30 Mw, USAEC Report ORNL-TM-1365, Oak Ridge National Laboratory, (to be published).

5. J. E. Allen et al., SNAP-50/SPUR Powerplant Requirements Report, CNLM-6291, Pratt and Whitney Aircraft, May 28, 1965.

6. J. E. Allen et al., SNAP-50/SPUR Powerplant Requirements Report, CNLM-6292, Pratt and Whitney Aircraft, May 28, 1965.

7. J. E. Allen et al., SNAP-50/SPUR Powerplant Requirements Report, CNLM-6293, Pratt and Whitney Aircraft, May 28, 1965.

8. R. L. Stevenson, Comparative Creep-Rupture Properties of D-43 and B-66 Alloys, USAEC Report ORNL-TM-944, Oak Ridge National Laboratory, November 1964.

9. R. Gordon, SNAP-8 Development Status, paper presented at AIAA Rankine Cycle Space Power System Specialist Conference, Cleveland, Ohio, Oct. 26, 1965 (to be published).

10. C. T. Ewing et al., High-Temperature Properties of Potassium, NRL Report 6233, U.S. Naval Research Laboratory, Sept. 24, 1965.

11. A. P. Fraas, Design and Development Tests of Direct-Condensing Potassium Radiators, paper presented at AIAA Rankine Cycle Space Power System Specialist Conference, Cleveland, Ohio, Oct. 28, 1965 (to be published).

12. F. L. Whipple, On Meteoroids and Penetration, Presented at American Astronautical Society Interplanetary Missions Conference, January 1963.

13. J. W. Gehring and S. Lieblein, Preliminary Results of Hypervelocity Impacts on Space Radiator Tubes, ARS Paper No. 2544-62, presented at ARS Meeting, September 25-28, 1962.

14. A. M. Perry, Status of MPRE Core Design, paper presented at AIAA Rankine Cycle Space Power System Specialist Conference, Cleveland, Ohio, Oct. 26, 1965 (to be published).

15. H. C. Claiborne, Reactor Shielding for Nuclear Turbine-Generator Space Power Plants, USAEC Report ORNL-TM-1367, Oak Ridge National Laboratory (to be published).

16. A. P. Fraas, The MPRE – A Boiling Potassium Reactor System, AIAA Paper No. 64-763, presented at the Third Biennial Aerospace Power Systems Conference, Philadelphia, Pennsylvania, Sept. 1-4, 1964.

17. L. V. Wilson, H. C. Young and A. M. Smith, Experience with Turbine-Driven Potassium Boiler Feed Pumps at ORNL, paper presented at AIAA Rankine Cycle Space Power System Specialist Conference, Cleveland, Ohio, Oct. 27, 1965 (to be published).

18. R. W. Swindeman, Fatigue of Austenitic Stainless Steels in the Low and Intermediate Cycle Range, USAEC Report ORNL-TM-1363, Oak Ridge National Laboratory, January 1966.

19. A. P. Fraas, Design Precepts for High-Temperature Heat Exchangers, Nucl. Sci. Eng., Vol. 8, p. 21 (1960).

20. R. E. MacPherson et al., Development Testing of Liquid Metal and Molten Salt Heat Exchangers, Nucl. Sci. Eng., Vol. 8, p. 44 (1960)

21. D. R. Miller, Thermal-Stress Ratchet Mechanism in Pressure Vessels, Trans. ASME, Vol. 81, p. 190 (June 1959).

22. P. Patriarca et al., Heat Exchanger Fabrication, Welding Journal, Vol. 36, p. 1172 (December 1957).

23. G. M. Tolson, MPRE Fuel Elements: Manufacture, Inspection, Drawings, and Specifications, USAEC Report ORNL-3902, Oak Ridge National Laboratory, January 1966.

24. Westinghouse Astronuclear Laboratory, Nuclear Power Plant, Lunar Exploration Systems for Apollo, Vol. II – Concept Selection, Part 2, WANL-PR(S)-004-A, p. 3-131, 1963.

25. M. L. Meyers, Study of Outage Experience with Selected Boiler and Turbine-Generator Units, USAEC Report ORNL CF-60-3-56, Oak Ridge National Laboratory, March 31, 1960.

26. A. P. Fraas, Reliability as a Criterion in Nuclear Space Power Plant Design, paper presented at ASME-SAE Meeting, April 1964.

27. Personal communication from D. R. Kellogg of Oak Ridge Gaseous Diffusion Plant, Nov. 4, 1965.

28. M. W. Rosenthal et al., The Feasibility of an Unattended Nuclear Power Plant, USAEC Report ORNL-2985, Oak Ridge National Laboratory, Aug. 30, 1960.

29. H. W. Savage and A. G. Grindell, Pump for High-Temperature Liquid Systems, paper presented at the ARS Space-Nuclear Conference in Gatlinburg, May 3-5, 1961.

30. A. G. Grindell et al., Development of Centrifugal Pumps for Operation with Liquid Metals and Molten Salts at 1100 to 1500°F, Nucl. Sci. Eng., Vol. 7, pp. 83-91 (1960).

31. R. L. Wallerstedt and D. B. Miller, Mercury Rankine Program Development Status and Multiple System Application, paper presented at AIAA Rankine Cycle Space Power System Specialist Conference, Cleveland, Ohio, Oct. 26, 1965 (to be published).

32. F. C. Wimberly et al., Mercury Rankine System Test Experience, paper presented at AIAA Rankine Cycle Space Power System Specialist Conference, Cleveland, Ohio, Oct. 26, 1965 (to be published).

33. A. P. Fraas, Medium Power Reactor Experiment Quart. Progr. Rept. for Period Ending Dec. 31, 1965, Oak Ridge National Laboratory (to be published).

34. M. E. LaVerne, Control Concepts and Digital Computer Analysis of the MPRE Fluid System, USAEC Report ORNL-TM-1368, Oak Ridge National Laboratory, January 1966.

35. Leo Beltracchi and Robert Morse, SNAP-50 Powerplant System Control Analysis, USAEC Report PWAC-497, Pratt and Whitney Aircraft, September 1965.

36. A. R. Barbin and M. M. Yarosh, An Analog Study of A Single-Loop Rankine Cycle System, USAEC Report ORNL-TM-1369, Oak Ridge National Laboratory, January 1966.

37. H. J. Metz and M. M. Yarosh, Experiences and Developments in Instrumentation for Liquid Metal Experiments, Proceedings of the Fourth High-Temperature Liquid-Metal Heat Transfer Technology Conference Held September 28-29, 1965, at Argonne National Laboratory, Argonne, Illinois (to be published).

38. RCA Service Company, Government Service Department, The Prediction and Measurement of Air Force Ground Electronic Equipment Reliability, Report No. RADC-TN-58-307, AD-148, 977, Aug. 15, 1958.

39. RCA Service Company, Government Service Department, Philosophy and Guidelines for Reliability Prediction of Ground Electronic Equipment, Report No. R-4-57, Oct. 15, 1957.

40. Reliability Stress Analysis for Electronic Equipment, MIL-HDBK-217 (WEPS), 31 Dec. 1961, handbook prepared by the RCA Service Co. for use by the U.S. Naval Avionics Facility, Indianapolis, Ind.

41. R. C. Stanix, Minuteman Reliability: Guide for Future Component Manufacturing, Electronic Industry, 19(12): 90 (December 1960).

42. M. M. Yarosh, Stability and Control Characteristics of Electrically Heated Test Rigs Designed to Simulate the MPRE System, USAEC Report ORNL-TM-1370, Oak Ridge National Laboratory (to be published).

43. R. B. Korsmeyer, Free-Liquid-Surface Behavior in a Zero-g Environment, pp. 70-82, Space Power Program Semiann. Progr. Rept. Dec. 31, 1962, USAEC Report ORNL-3420, Oak Ridge National Laboratory.

44. R. B. Korsmeyer, Zero-g Experiments, pp. 94-97, Medium Power Reactor Experiment Quart. Progr. Rept. March 31, 1965, USAEC Report ORNL-3818, Oak Ridge National Laboratory.

45. R. B. Korsmeyer, The Rankine Cycle in a Zero-Gravity Environment, USAEC Report ORNL-TM-1137, Oak Ridge National Laboratory, July 1965.

46. M. E. LaVerne, Analysis of the Hot Spot Problem in the MPRE, USAEC Report ORNL-TM-1371, Oak Ridge National Laboratory (to be published).

[redacted]

INTERNAL DISTRIBUTION

1. G. M. Adamson
2. S. E. Beall
3. H. C. Claiborne
4. F. L. Culler
5. J. E. Cunningham
6. J. H. DeVan
7. J. Foster
8-27. A. P. Fraas
28. A. G. Grindell
29. P. N. Haubenreich
30. W. O. Harms
31. S. I. Kaplan
32. P. R. Kasten
33. R. B. Korsmeyer
34. M. E. Lackey
35. M. E. LaVerne
36. M. I. Lundin
37. R. N. Lyon
38. H. G. MacPherson
39. R. E. MacPherson
40. H. C. McCurdy
41. J. W. Michel
42. A. J. Miller
43. A. M. Perry
44. G. Samuels
45. H. W. Savage
46. A. W. Savolainen
47. J. L. Scott
48. O. L. Smith
49. I. Spiewak
50. A. Taboada
51. D. B. Trauger
52. A. M. Weinberg
53. J. R. Weir, Jr.
54. G. D. Whitman
55. J. W. Wilson
56. M. M. Yarosh
57. Gale Young
58. J. Zasler
59-60. Central Research Library
61-62. Y-12 Document Reference Section
63-65. Laboratory Records
66. Laboratory Records-Records Copy
67. ORNL Patent Office

EXTERNAL DISTRIBUTION

68. C. H. Armbruster, Wright Air Development Center, Dayton, Ohio
69. D. Blancher, Lockheed, Burbank, California
70. G. K. Dicker, AEC, Washington
71. Sherman Edwards, Lockheed, Sacramento, California
72-81. H. B. Finger, AEC, Washington
82. Graham Hagey, NASA, Houston
83. Carl E. Johnson, AEC, Washington
84. J. D. Lafleur, AEC, Washington
85-89. Bernard Lubarsky, NASA, Lewis Research Center
90. James Lynch, NASA, Washington
91. Benjamin Pinkel, Rand Corp., Santa Monica, California
92. Fred Schulman, NASA, Washington
93. Abe Silverstein, NASA, Lewis Research Center
94-98. R. M. Spencer, AEC, Washington
99. Jack Stearns, JPL, Pasadena, California
100. H. J. Stewart, JPL, Pasadena, California
101. G. C. Szego, IDA, Arlington, Virginia
102. T. F. Widmer, GE, Valley Forge, Philadelphia, Pennsylvania
103. Gordon Woodcock, NASA, Huntsville
104. W. Woodward, NASA Washington
105-119. Division of Technical Information Extension (DTIE)
120. Research and Development Division, ORO
121-122. Reactor Division, ORO

[redacted]