167

145

ORNL-332 (Third Edition)
UC-41 – Health and Safety
TID-4500 (19th ed. Rev.)

HEALTH PHYSICS INSTRUMENT MANUAL

D. M. Davis
E. D. Gupton

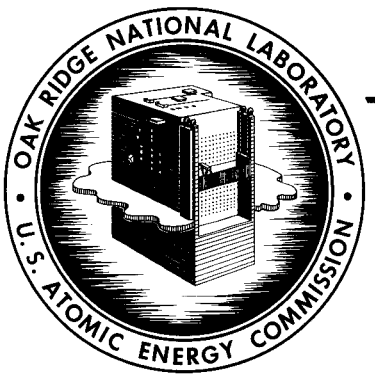

This document has been approved for release to the public by:

Technical Information Officer, ORNL Site — Date 3/22/95

OAK RIDGE NATIONAL LABORATORY
operated by
UNION CARBIDE CORPORATION
for the
U.S. ATOMIC ENERGY COMMISSION

Printed in USA. Price: $2.50 Available from the
Office of Technical Services
U. S. Department of Commerce
Washington 25, D. C.

LEGAL NOTICE

This report was prepared as an account of Government sponsored work. Neither the United States, nor the Commission, nor any person acting on behalf of the Commission:

A. Makes any warranty or representation, expressed or implied, with respect to the accuracy, completeness, or usefulness of the information contained in this report, or that the use of any information, apparatus, method, or process disclosed in this report may not infringe privately owned rights; or

B. Assumes any liabilities with respect to the use of, or for damages resulting from the use of any information, apparatus, method, or process disclosed in this report.

As used in the above, "person acting on behalf of the Commission" includes any employee or contractor of the Commission, or employee of such contractor, to the extent that such employee or contractor of the Commission, or employee of such contractor prepares, disseminates, or provides access to, any information pursuant to his employment or contract with the Commission, or his employment with such contractor.

ORNL-332 (Third Edition)

Contract No. W-7405-eng-26

HEALTH PHYSICS DIVISION

HEALTH PHYSICS INSTRUMENT MANUAL

D. M. Davis
E. D. Gupton

DATE ISSUED

MAY 7 1963

OAK RIDGE NATIONAL LABORATORY
Oak Ridge, Tennessee
operated by
UNION CARBIDE CORPORATION
for the
U. S. ATOMIC ENERGY COMMISSION

CONTENTS

Page

Introduction v

Part 1. Some Models of Radiation Detection and Measuring Instruments Used by the Applied Health Physics Section at Oak Ridge National Laboratory

Summary of Radiation Detection and Measuring Instruments 3
Air Monitor (Gaseous, Continuous) 4
Air Monitor (Continuous, Beta-Gamma) 6
Automatic Air Sampler (Alpha) 9
Automatic Air Sampler (Beta) 12
Air Sampler (Disk, Portable) 13
Air Sampler (Hi-Volume Impactor) 14
Alpha-Sample Counter (Scintillation) 15
Alpha-Sample Counter (Gas Flow, Proportional) 18
Alpha Counter (Proportional, Portable) 20
Alpha-Scintillation Counter (Portable) 23
Alpha or Beta-Gamma Monitor (AC Powered) 26
Alpha Survey Meter (Samson) 29
Charger-Reader for Pocket Ionization Chambers (Minometer) 31
Cutie Pie (Standard Model) 33
Dosimeter (Fast Neutron) 35
Dosimeter (Fiber Type) 37
Electroscope (Lauritsen) 39
Fast-Neutron Survey Meter 41
Filtron (Air-Sample Collector) 44
G-M Counter (End-Window Type) 45
G-M Survey Meter 47
Gamma-Scintillation Counter (Portable) 50
Hand and Foot Counter 53
High-Range Survey Meter (Fish Pole Probe) 56
Juno (Alpha, Beta, Gamma Survey Meter) 58
Laundry Monitor (Beta-Gamma) 60
Monitron 62
Pocket Ionization Chamber 65
Precipitron 67
Quintector 68
R-Meter (Condenser) 71
Roentgen Rate Meter (Victoreen Model 510) 73
Thermal-Neutron Counter (Portable) 76

Part 2. Sources, Procedures, and Calibration Devices

2.1 Gamma Sources 81
2.1.1 Radium 81
2.1.2 Artificially Produced Radioisotopes 85
2.2 Beta Sources 90
2.3 Alpha Sources 90
2.3.1 Preparation 90
2.3.2 Assay 91
2.4 Neutron Sources 91
2.4.1 Types of Sources 91
2.4.2 Neutron-Flux Calibration 92
2.4.3 Allowance for Gamma Radiation During Flux Calibration 92
2.4.4 Determination of Fast-Neutron Flux 92
2.4.5 Fast-Neutron Energies and Their Effect on Calculations of Dose Rates 92
2.4.6 Optimal Thickness of Paraffin Used to Thermalize Neutrons 92
2.5 Special Sources 92
2.5.1 Hand and Foot Counter Calibration Sources 92
2.5.2 CAM Calibration Source 94
2.5.3 Laundry Monitor Calibration Source 94
2.6 Gamma Calibration Device for Monitoring Film 96
2.7 Calibration Device for Ionization Chambers ("Well") 97
2.8 Calibration Device for G-M Survey Meters 99
2.9 Calibration Device for Electroscopes 99
2.10 Alpha Calibration Source 100
2.11 Calibration of Thermal-Neutron Survey Meter 100
2.12 Calibration of Fast-Neutron Survey Meter 102

Part 3. The ORNL Badge Dosimeter and Its Application to Personnel Monitoring

3.1 Introduction 105
3.2 Historical Development of ORNL Dosimeter 105
3.3 Description of the ORNL Badge Meter, Model II 105
3.4 Beta-Gamma Dosimetry Techniques 110
3.4.1 Film Dosimetry 110
3.4.2 Glass Dosimetry 112
3.4.3 Chemical Dosimeter 116
3.5 Neutron-Dosimetry Techniques 116
3.5.1 Routine 116
3.5.2 Criticality 119
3.6 Summary of ORNL Film-Dosimetry Experiments 123
3.6.1 Dose Range of Film 123
3.6.2 Photon-Energy Response of Film 124
3.6.3 Beta-to-Gamma Response 130
3.6.4 Intensification of Film Blackening with Metallic Filters 132
3.6.5 Latent Image Stability of Beta-Gamma Film 132

HEALTH PHYSICS INSTRUMENT MANUAL

D. M. Davis
E. D. Gupton

INTRODUCTION

This manual is the second revision of *Applied Health Physics Radiation Survey Instrumentation*, Report ORNL-332 (Jan. 1, 1954). Part 1 is a ready reference to the radiation monitoring instruments (for personnel and for other kinds of monitoring) and is written as nontechnically as possible in order that even casual users of the instruments can quickly obtain the prominent characteristics and uses of the instruments. Part 2 is for those who need a working knowledge of sources and calibration procedures and devices. Part 3 is a satisfactorily complete discussion of the ORNL badge dosimeter, a widely used personnel monitor.

The purpose of this manual is to provide apprentice health physics surveyors and other operating groups not directly concerned with radiation-detection instruments a working knowledge of the radiation-detection and -measuring instruments in use at the Laboratory. The choice of an instrument is a result of several factors, which include availability at the time of request, development and testing programs in progress, and economy.

The rapid progress in the development and production of new types of instruments makes their cataloguing a very difficult task. The inclusion of the description of an instrument in this manual is not to be interpreted as an endorsement for that instrument, nor is the omission of an instrument any derogatory reflection on its merits.

It is difficult for the authors to acknowledge properly the valuable assistance they received in preparing this manual and the earlier editions. In fact, the manual represents the efforts of a number of people in the Health Physics Division, particularly the Applied Health Physics Section, and the Instrumentation and Controls Division.

Part 1

Some Models of Radiation Detection and Measuring Instruments Used by the Applied Health Physics Section at Oak Ridge National Laboratory

SUMMARY OF RADIATION DETECTION AND MEASURING INSTRUMENTS[a]

Instrument	Detector	Radiation Detected
Air monitor (gaseous, continuous)	Ionization chamber	Alpha, beta, gamma
Air monitor (continuous)	G-M tube	Particulate matter, beta-gamma
Automatic air sampler	ZnS phosphor and photomultiplier	Alpha
Automatic air sampler	G-M counter	Beta, gamma
Air sampler (disk, portable)		
Air sampler (hi-volume impactor)		
Alpha-sample counter	ZnS phosphor and photomultiplier	Alpha
Alpha-sample counter	Proportional counter	Alpha, beta, gamma
Alpha counter (portable)	Proportional counter	Alpha
Alpha scintillation counter (portable)	ZnS phosphor and photomultiplier	Alpha
Alpha or beta-gamma monitor (ac powered)	ZnS phosphor or G-M counter	Alpha
Alpha survey meter (Samson)	Ionization chamber	Alpha, beta, gamma
Charger-reader (minometer)	Quartz fiber	Gamma
Cutie Pie	Ionization chamber	Beta, gamma, x ray
Dosimeter (fast-neutron)	Proportional counter	Fast neutrons (>0.2 Mev)
Dosimeter (fiber type)	Ionization chamber	Gamma
Electroscope (Lauritsen)	Ionization chamber	Beta, gamma
Fast-neutron survey meter	Proportional counter	Fast neutron
Filtron air-sample collector		Alpha, beta, gamma
G-M survey meter	G-M counter	Beta, gamma
Gamma scintillation counter (portable)	NaI-crystal photomultiplier	Gamma
G-M counter (end-window)	G-M counter	Alpha, beta, gamma
Hand and foot counter	G-M counter	Beta, gamma
High-range survey meter (Fish pole probe)	Ionization chamber	Gamma
Juno survey meter	Ionization chamber	Alpha, beta, gamma
Laundry monitor	G-M counter	Beta, gamma
Monitron	Ionization chamber	Gamma, neutrons
Pocket chamber	Ionization chamber	Gamma
Precipitron		

SUMMARY OF RADIATION DETECTION AND MEASURING INSTRUMENTS[a] (continued)

Instrument	Detector	Radiation Detected
Quintector	G-M Counter	Beta, gamma
R-meter	Ion chamber	X rays and gamma
Roentgen rate meter	Ion chamber	X rays and gamma
Scaler (beta-gamma probe, ac operated)	G-M counter	Beta, gamma
Thermal-neutron counter (portable)	BF_3 counter	Thermal neutrons

[a]Sections on individual devices may be located in the table of contents.

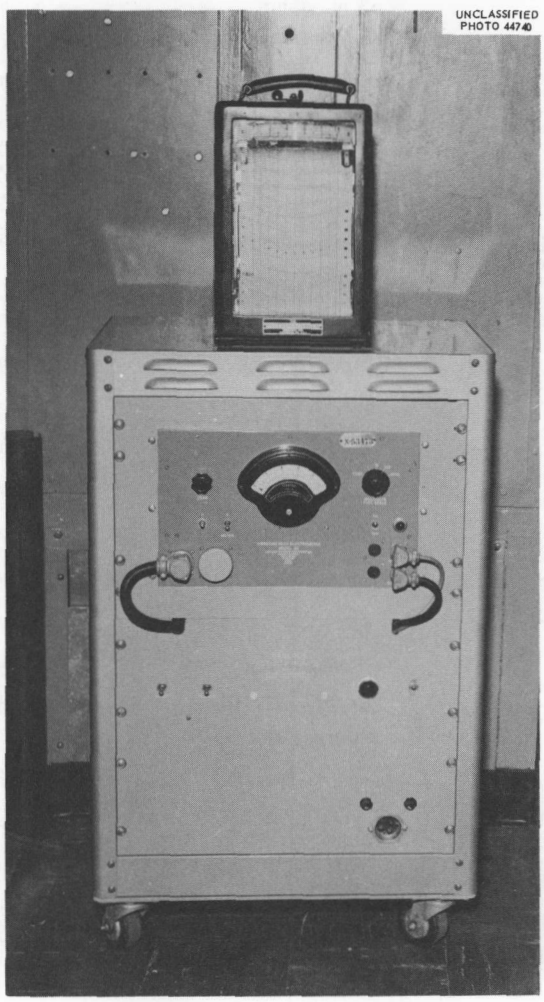

Air Monitor (Gaseous, Continuous)

This air monitor is used primarily as a tritium monitor. Its principal components are a gas-flow ionization chamber with a blower unit, a precollector of particles and ions, a vibrating-reed electrometer, and a strip-chart recorder. The ion chamber is shielded with 1 in. of lead.

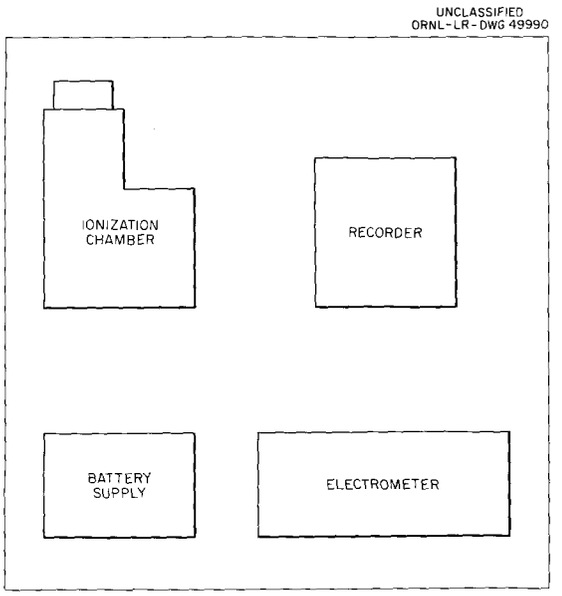

Major Components of Air Monitor (Gaseous, Continuous)

AIR MONITOR (GASEOUS, CONTINUOUS)

Characteristics

1. Radiation detected: Alpha, beta, gamma.
2. Ranges: 1, 10, 100, and 1000 mv full scale.
3. Sensitivity: Full-scale reading on the 100-mv range represents MPC_a (maximum permissible concentration in air) for tritium.
4. Air flow rate: 1 ft^3/min.
5. Efficiency: A function of radiation energy.
6. Power: Batteries for ion precollector and chamber voltage; 110 v, 60 cycles for blower, chart drive, and electrometer.
7. Dimensions: 20 ½ in. deep, 23 in. wide, 50 in. high.
8. Weight: Approximately 250 lb.

Application

1. Basically, the instrument was developed to continuously detect and measure the amount of tritium in the atmosphere.
2. The instrument will not detect particles because they are removed by a filter before the air enters the ionization chamber.
3. The collecting potential is 90 v, which is ample to collect all ions formed within the chamber by radioactive gases.
4. Because known concentrations of tritium in a room or in any large enclosure are difficult to obtain, the chamber was calibrated according to calculations.
5. Any other radioactive gas or a nearby gamma source can cause ionization current within the chamber; this should be kept in mind when using the instruments.

Air Monitor (Continuous, Beta-Gamma)

This device monitors the quantity of particulate beta-gamma radiation in the surrounding air. A vacuum pump draws air through a filter over a G-M tube mounted in a lead shield. The tube is connected to a count-rate meter which is connected to a strip-chart recorder, and the radiation level is continuously recorded. An associated relay-alarm system permits visible and audible alarms to be activated at predetermined levels.

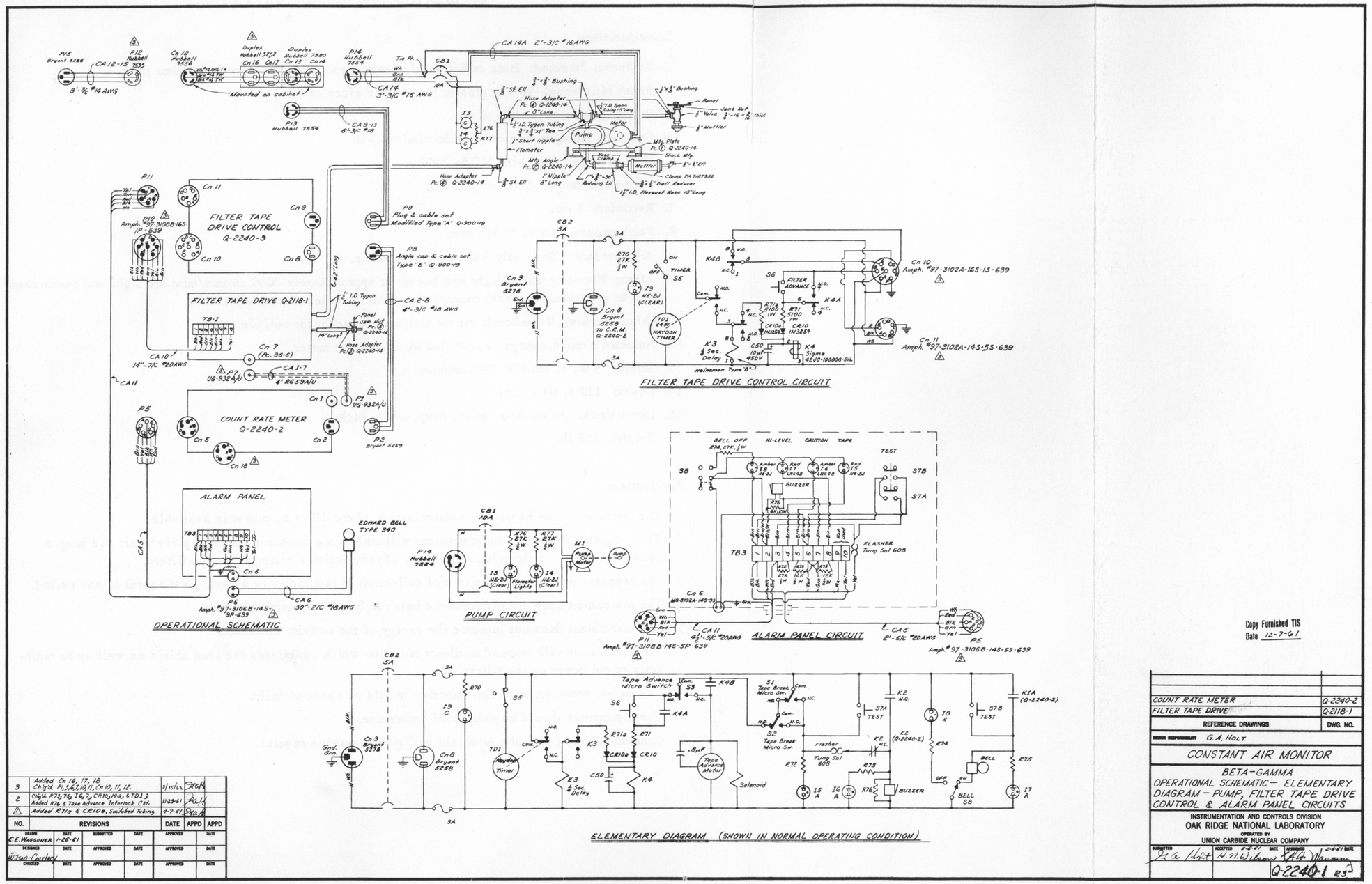

NO.	REVISIONS	DATE	APPD	APPD
3	Added Cn 16, 17, 18 Chg'd P1, 5, 6, 7, 8, 9, 11, Cn 10, 11, 12.	9/15/61	[illegible]	
2	Chg'd R73, 75, 76, 7, CR10, 10a, & TD1; Added R76 & Tape Advance Interlock Ckt.	11-29-61	[illegible]	
1	Added R71a & CR10a, Switched Tubing	4-7-61	[illegible]	

DRAWN	DATE	SUBMITTED	DATE	APPROVED	DATE
C.E. Wassouer	1-26-61				
DESIGNED	DATE	APPROVED	DATE	APPROVED	DATE
Wilson-Gurley					
CHECKED	DATE	APPROVED	DATE	APPROVED	DATE

Circuit Diagram of Major Components of Air Monitor, Continuous, Beta-Gamma.

AIR MONITOR (CONTINUOUS, BETA-GAMMA)

Characteristics

1. Radiation detected: Beta radiation of energy greater than 0.1 Mev and gamma rays.
2. Filter efficiency: 90% or greater for particle sizes of $>0.3\ \mu$.
3. Counting geometry: 10% of 4π.
4. Counter: Halogen quenched, side-window G-M.
5. High voltage: Variable, 700 to 2000 v.
6. Rate-meter range: 5000 counts/min.
7. Recorder: 1 ma.
8. Pump capacity: 8 to 10 ft^3/min.
9. Air flow rate: Nominally 3 ft^3/min; adjustable.
10. Alarm: Normally, amber light and buzzer at approximately 2000 counts/min; red light and continuous bell at approximately 4000 counts/min. The alarm levels are adjustable.
11. Other signals: Tape-break buzzer and light; speaker for audible count.
12. Automatic range change is provided for linear rate meter.
13. Shield: 3 in. of lead for G-M counter.
14. Power: 110 v, 60 cycles.
15. Dimensions: 30 in. long, 16 in. deep, 36 in. high.
16. Weight: 750 lb.

Application

1. The instrument may be used anywhere inside where 110-v ac power is available.
2. When properly adjusted, the instrument will maintain a constant monitoring of the air and keep a permanent record of the relative quantity of radioactivity collected on the filters.
3. The recorder sheet shows the rate of collection of radioactivity as well as the total in any period.
4. The instrument does not differentiate between beta and gamma activity.
5. The instrument does not indicate the energy of the activity collected.
6. The instrument will respond to direct radiation which penetrates the lead shield as well as to radioactivity collected on the filters.
7. The meter, recorder, and relay function should be checked daily.
8. The instrument should be calibrated before use.
9. Contamination of the tube or shield will give erroneous results.

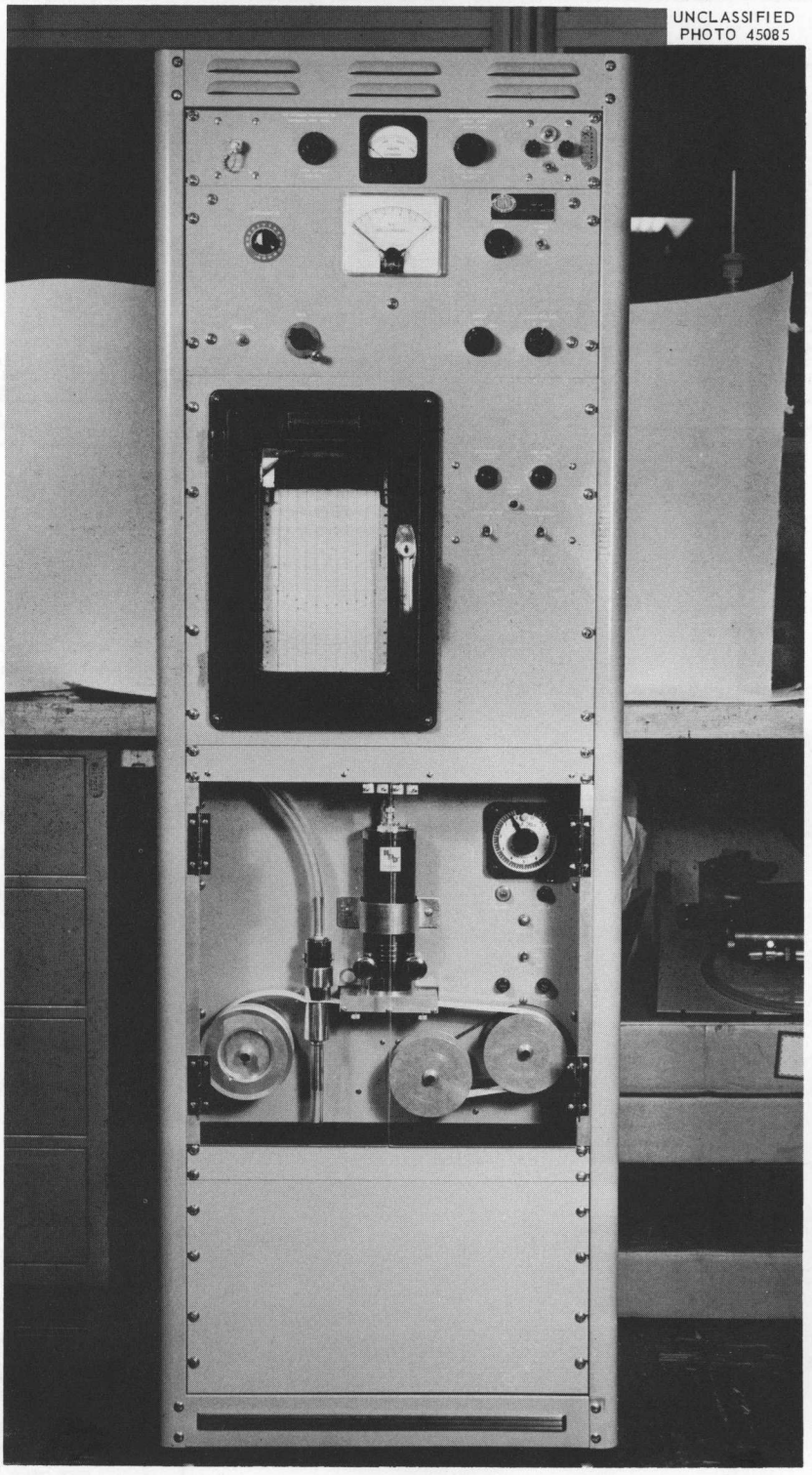

Automatic Air Sampler (Alpha)

This device collects air-borne particles onto a paper-strip filter and obtains and records the counting rates due to alpha-particle emission from the sample. A sample may be collected for a preselected interval, during which the preceding sample is counted and the counting rate is recorded. A counting-rate adjustable alarm is provided.

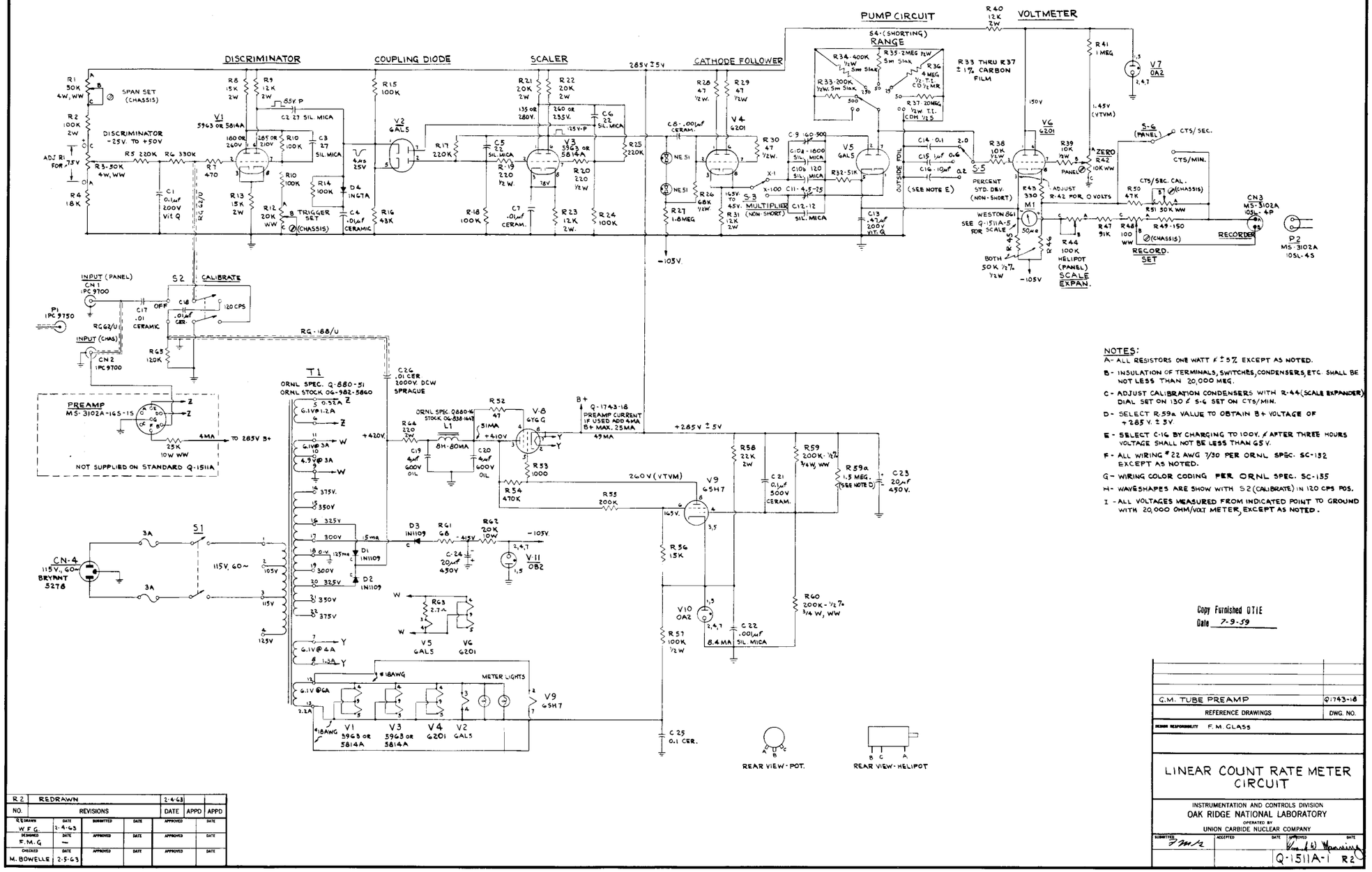

NOTES:

A - ALL RESISTORS ONE WATT ¢ ± 5% EXCEPT AS NOTED.

B - INSULATION OF TERMINALS, SWITCHES, CONDENSERS, ETC. SHALL BE NOT LESS THAN 20,000 MEG.

C - ADJUST CALIBRATION CONDENSERS WITH R-44 (SCALE EXPANDER) DIAL SET ON 130 & S-6 SET ON CTS/MIN.

D - SELECT R.59a VALUE TO OBTAIN B+ VOLTAGE OF +285 V. ± 3V.

E - SELECT C-16 BY CHARGING TO 100V. ¢ AFTER THREE HOURS VOLTAGE SHALL NOT BE LESS THAN 95 V.

F - ALL WIRING # 22 AWG 7/30 PER ORNL SPEC. SC-132 EXCEPT AS NOTED.

G - WIRING COLOR CODING PER ORNL SPEC. SC-135

H - WAVESHAPES ARE SHOW WITH S2 (CALIBRATE) IN 120 CPS POS.

I - ALL VOLTAGES MEASURED FROM INDICATED POINT TO GROUND WITH 20,000 OHM/VOLT METER, EXCEPT AS NOTED.

Copy Furnished OTIE
Date 7-9-59

NO.	REVISIONS	DATE	APPD	APPD
R 2	REDRAWN	2-4-63		

REDRAWN W F G.	DATE 2-4-63	SUBMITTED	DATE	APPROVED	DATE
DESIGNED F. M. G	DATE	APPROVED	DATE	APPROVED	DATE
CHECKED M. BOWELLE	DATE 2-5-63	APPROVED	DATE	APPROVED	DATE

G.M. TUBE PREAMP — Q-1743-18
REFERENCE DRAWINGS — DWG. NO.
DESIGN RESPONSIBILITY F. M. GLASS

LINEAR COUNT RATE METER CIRCUIT

INSTRUMENTATION AND CONTROLS DIVISION
OAK RIDGE NATIONAL LABORATORY
OPERATED BY
UNION CARBIDE NUCLEAR COMPANY

SUBMITTED	ACCEPTED	DATE	APPROVED	DATE

Q-1511A-1 R2

Linear Count Rate Meter Circuit

AUTOMATIC AIR SAMPLER (ALPHA)

Characteristics

1. Radiation detected: Alpha.
2. Ranges: 500, 2000, 5000 counts/min, full scale.
3. Diameter of collected sample: 1 in.
4. Air flow rate: 2 ft^3/min.
5. Detector: ZnS phosphor and RCA 6655 photomultiplier.
6. Geometry and efficiency: 35% of 4 π for Pu^{239} alpha's.
7. Power required: 110 v, 60 cycles, 10 amp.
8. Dimensions: 69 in. high, 18 in. deep, 22 in. wide.
9. Weight: 200 lb.

Application

1. This instrument will not yield information relative to a hazard until after the sample has been collected and presented to the counter.
2. When source of radioactivity is removed, counting rate vs time slope of the recorder trace is a function of the effective radioactive decay rates of the isotopes collected.

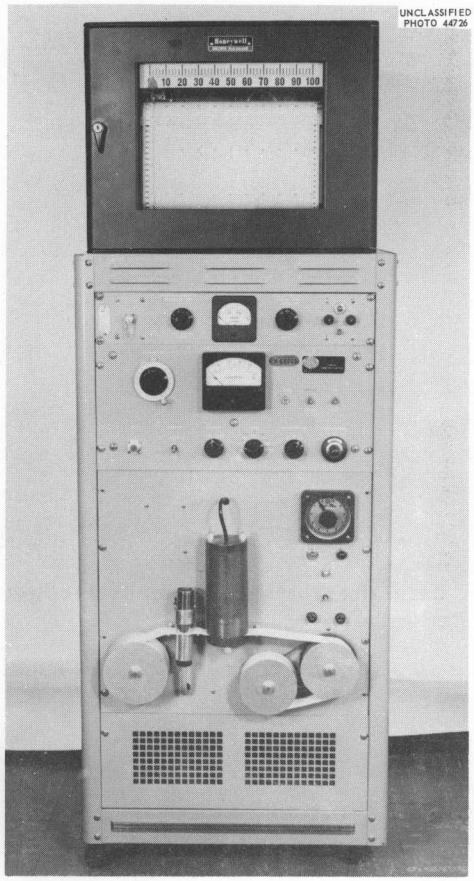

Automatic Air Sampler (Beta)

The beta automatic air sampler collects air-borne particles onto a paper-strip filter and obtains and records the counting rates due to beta-particle emission from the sample. A sample may be collected for a preselected interval, during which the preceding sample is counted and the counting rate is recorded. A counting-rate adjustable alarm is provided.

AUTOMATIC AIR SAMPLER (BETA)

Characteristics

1. Radiation detected: Beta and gamma.
2. Ranges: 10 ranges, 200 to 200,000 counts/min.
3. Diameter of collected sample: 1 in.
4. Air flow rate: 2 ft^3/min.
5. Detector: Halogen-quenched, mica end-window G-M counter, shielded by $\frac{1}{2}$ in. of lead.
6. Geometry and efficiency: 20% for beta particles with energy greater than 0.1 Mev; less than 1% for gamma rays from sample.
7. Power required: 110 v, 60 cycles, 10 amp.
8. Dimensions: 22 in. wide, 18 in. deep, 69 in. high.
9. Weight: 200 lb.

Application

1. This instrument does not yield information relative to a hazard until after the sample has been collected and presented to the counter.
2. The thin (2 mg/cm^2) window of the counter permits sensitivity to low-energy beta particles.

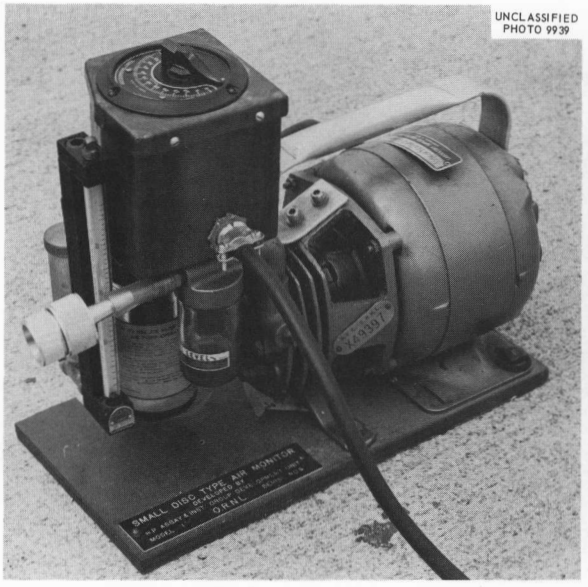

Air Sampler (Disk, Portable)

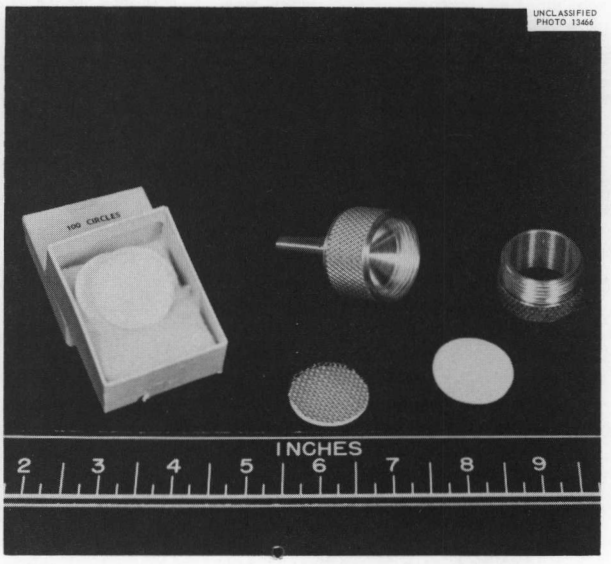

Collector Head, Disassembled

The disk air sampler is an ac-operated motor-blower unit with a paper-disk filter holder. Air is drawn through the filter and is subsequently analyzed with alpha and beta counters for radioactive particles collected.

AIR SAMPLER (DISK, PORTABLE)

Characteristics

1. Sampling applications: Collects particles which are subsequently counted for alpha, beta, and gamma.
2. Collection efficiency: 75% or greater for particles of respiratory-tract significance (0.1 to 10 μ in in diameter).
3. Filter: $1\frac{1}{8}$ in. in diameter; Whatman No. 50 filter paper.
4. Air flow rate: 1 to 5 ft^3/min.
5. Lubrication: Models are available which (1) require oil to be added after every 10 to 24 hr operation or (2) require lubrication after every 1000 hr operation.
6. Power: 110 v, ac.
7. Dimensions (nominal): 15 in. long, 8 in. wide, 9 in. high.
8. Weight: 25 to 30 lb.

Application

1. May be used wherever 110-v ac power is available.
2. For accurate assay of radioactivity collected, the collection time should be noted, and the flow rate of the air should be gaged.
3. The filter disk should be smooth and free of holes.
4. The filter holder should be turned so that there is no obstruction in front of the filter.
5. Shut off power to motor before removing filter.

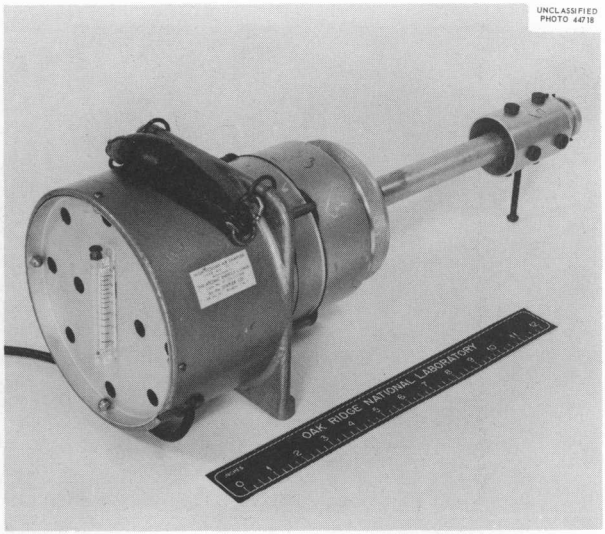

Alpha Sampler (Hi-Volume Impactor)

The high-volume air sampler is modified to collect particulate matter by impaction on a metal disk. The direction of the air stream drawn through the sampling head is reversed on the collection disk. The heavier particles continue to travel in the original direction and impinge on the disk, but the lighter particles are carried with the reversed air stream.

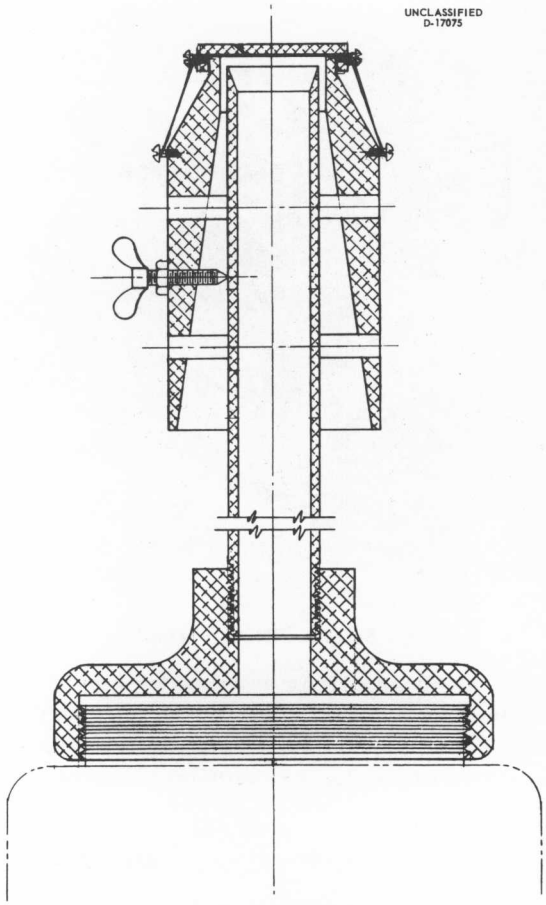

Cross Sectional View of Collector Head

AIR SAMPLER (HI-VOLUME IMPACTOR)

Characteristics

1. Efficiency: Function of particle mass and density; the greater the mass, the higher the collection efficiency.
2. Air flow rate: 25 ft^3/min.
3. Duty cycle: Continuous or intermittent, as desired.
4. Power: 110 v, 60 cycles, 600 w.
5. Dimensions: 20 $\frac{1}{2}$ in. deep, 7 $\frac{3}{8}$ in. high, 7 $\frac{3}{8}$ in. wide.
6. Weight: 12 lb.

Application

1. Samples at a very high rate, about 700 liters/min.
2. Particularly useful for sampling of dust containing long-lived alpha emitters.
3. Tends to separate particles greater than 0.5 μ from those less than 0.5 μ in diameter.
4. For plutonium air contamination, the sampling efficiency appears to be approximately 90%.

Alpha-Sample Counter (Scintillation)

These counters are used for the assay of alpha emitters in various types of samples. They consist of a light-tight sample holder, a zinc sulfide or cesium iodide phosphor, and a photomultiplier. These items, with or without a preamplifier, may be housed in a separate unit or may be included as an integral part of the associated scaler high-voltage equipment.

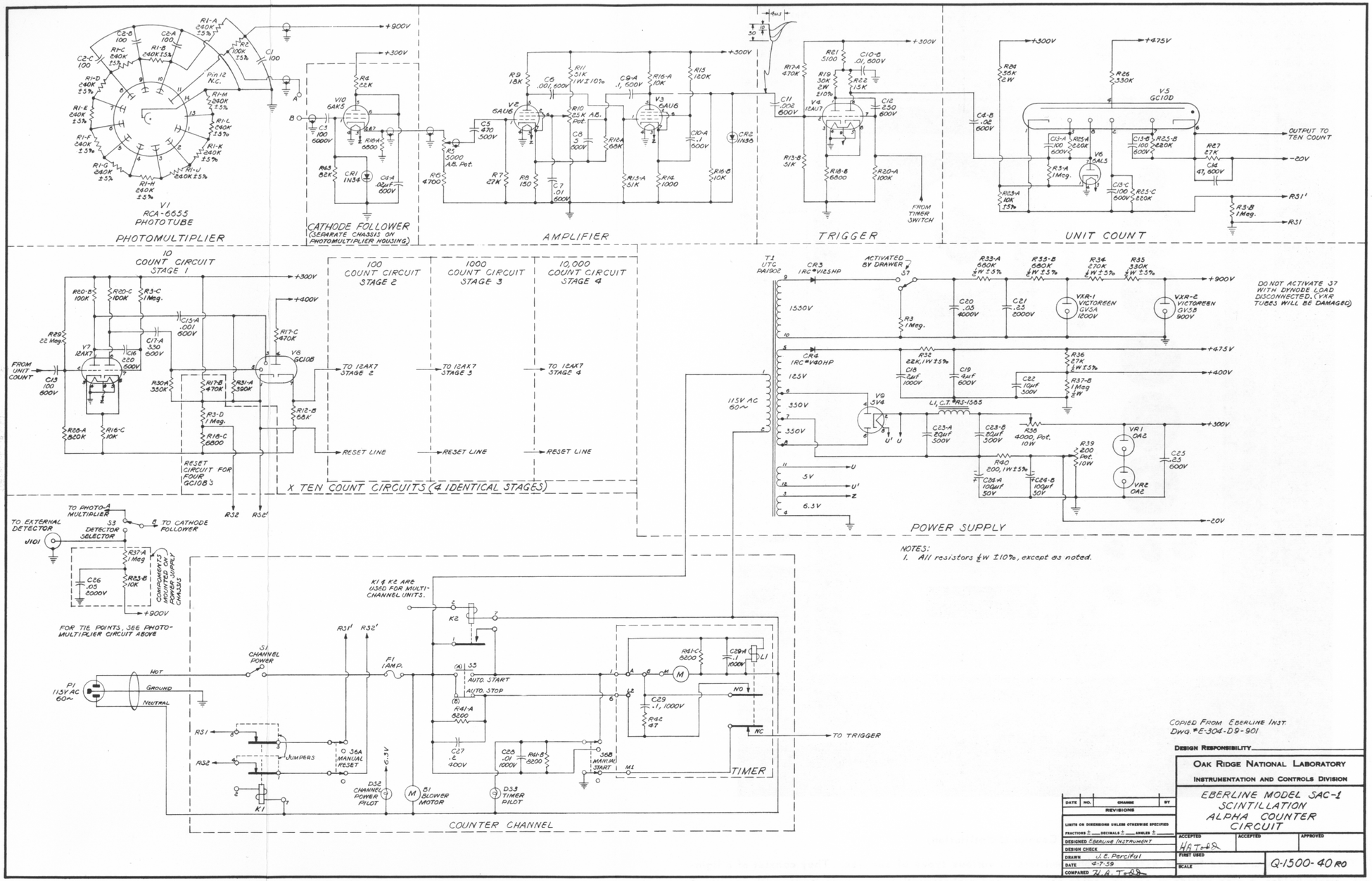

Circuit Diagram of Alpha Sample Counter, Scintillation

ALPHA-SAMPLE COUNTER (SCINTILLATION)

Characteristics

1. Radiation detected: Alpha.
2. Geometry: 30 to 40% of 4 π.
3. Background: 5 to 15 counts/hr.
4. Power required: 110 v ac, 100 w.
5. Dimensions: Vary with type.
6. Weight: Varies with type; 3 to 15 lb for separate units.

Application

1. This is a fast counter, with a dead-time loss of only 1% per 100,000 counts/min. This is much faster than the G-M tube but not as fast as the proportional counter.
2. The beta contribution is about 1 count/min, using a 500,000 counts/min beta standard.
3. This counter does not contaminate as easily as does the proportional counter.
4. The maintenance is considerably less than that for the proportional counter.
5. The background counting rate is as good as that for the proportional counter.

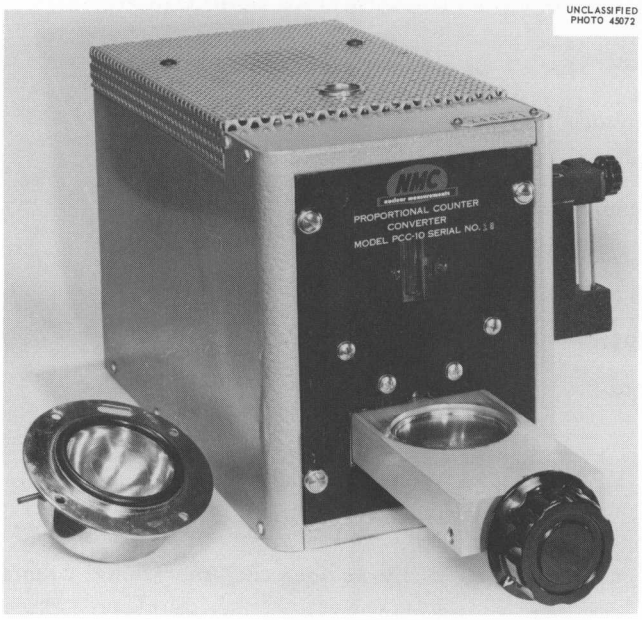

Alpha-Sample Counter (Gas Flow, Proportional)

The gas-flow proportional counter is a very efficient alpha, beta, and gamma analyzer. It is moderately priced and has a low alpha background and a 2-π geometry. It discriminates between alpha and beta-gamma radiation in combination. It requires, as accessories, a timer and scaler that are capable of supplying the necessary power.

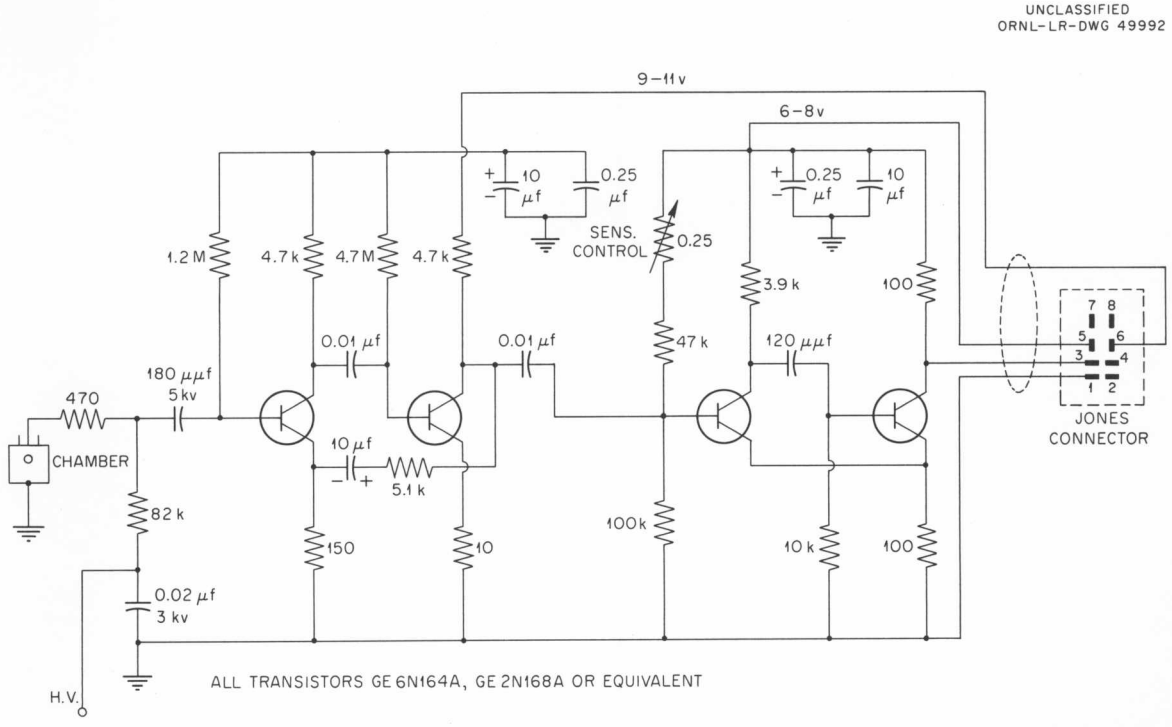

Circuit Diagram of Alpha-Sample Counter (Gas Flow, Proportional)

ALPHA-SAMPLE COUNTER (GAS FLOW, PROPORTIONAL)

Characteristics

1. Radiation detected: Alpha, beta, gamma.
2. Discrimination: By proper adjustment of high-voltage levels.
3. Efficiency: Alpha, 51%; beta, 55 to 57%; gamma, 2%.
4. Background: Alpha, 6 to 10 counts/hr; beta-gamma, 45 to 50 counts/min.
5. Operating voltages: alpha, 900 to 1200 v; beta, 1700 to 1900 v.
6. Output signal: 10 v across 1200 ohms.
7. Gas required: 90% argon, 10% methane.
8. Power required: 6.3 v, ac at 15 amp; 250 to 300 v, dc at 20 ma; 150 to 200 v, dc-regulated at 8 ma. High voltage is variable at 800 to 2000 v.
9. Dimensions: $6\frac{1}{2}$ in. wide, $8\frac{1}{2}$ in. high, $12\frac{1}{2}$ in. long.
10. Weight: 13 lb.

Application

1. This counter has a long voltage plateau for consistent counting.
2. The dead time is relatively short.
3. There is no beta contribution for operating voltages within the range 900 to 1200 v, except for beta counting rates greater than 100,000 counts/min.
4. The stream of counter gas tends to blow contamination from the sample to the wall of the counter and the loop electrode, necessitating decontamination of these components.

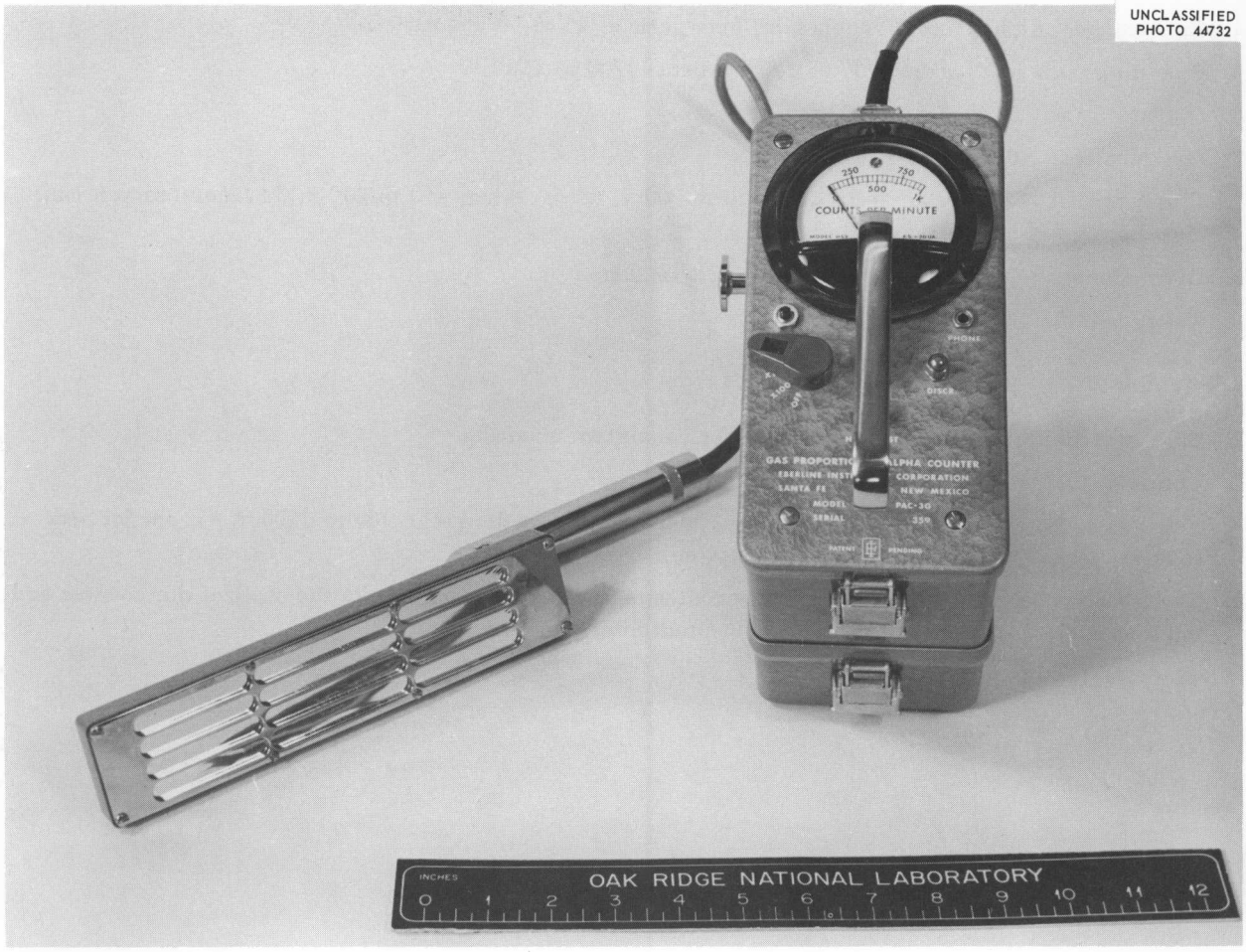

Alpha Counter (Proportional, Portable)

The two types of portable alpha proportional counters in use are similar except for the proportional chambers, one being an air chamber and the other a propane gas-flow chamber. Transistors are used for high-voltage supply and amplification. Pulses from the counter are indicated by a rate meter and an earphone. The gas-flow counter is far superior to the air counter in areas of high relative humidity.

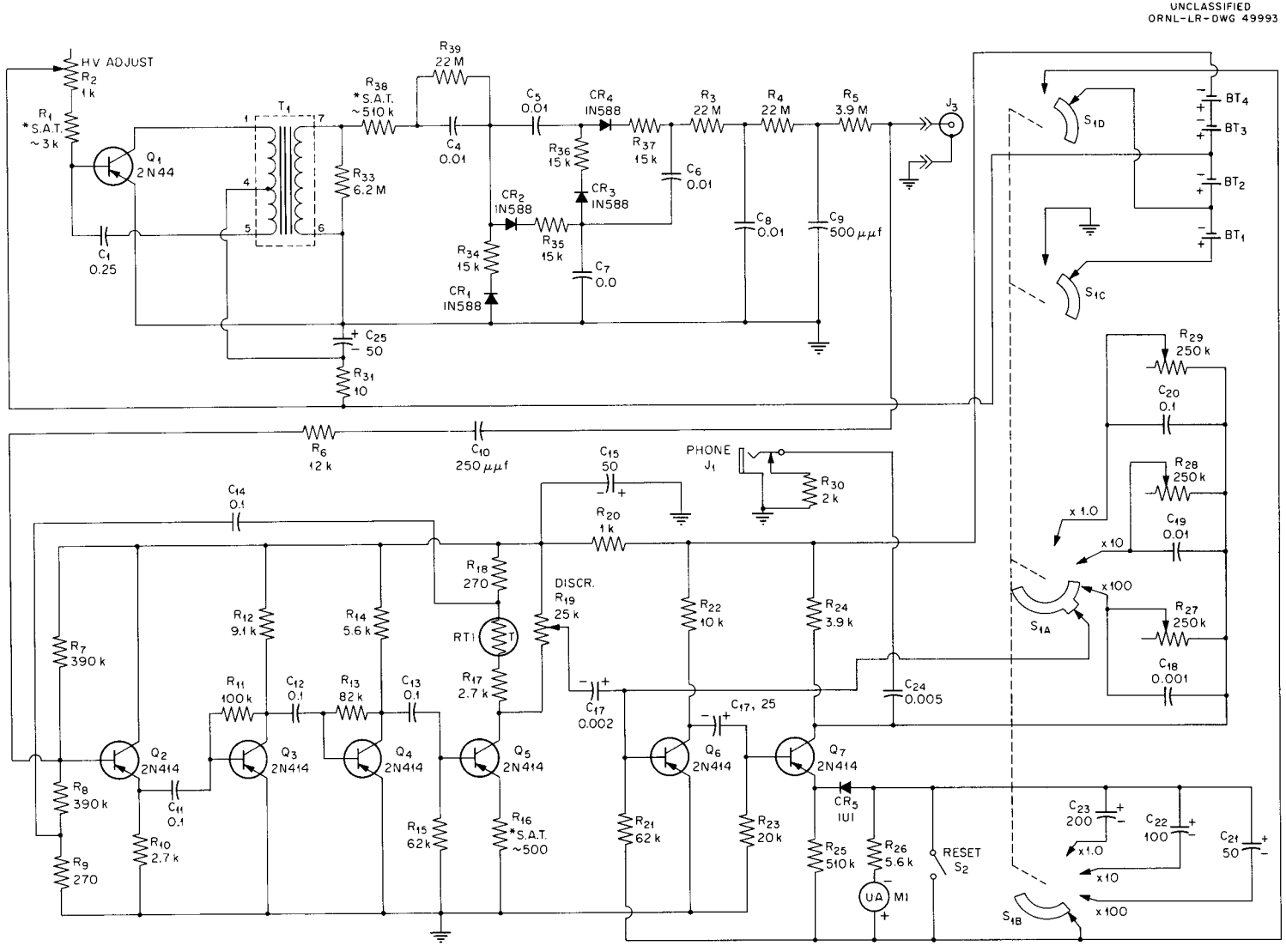

CAPACITOR VALUES IN MICROFARADS UNLESS FOLLOWED BY $\mu\mu f$ = MICROMICROFARADS.
RESISTOR VALUES IN OHMS UNLESS FOLLOWED BY k = 1000 OHMS OR M = 1,000,000 OHMS.
SWITCHES SHOWN IN "OFF" POSITION.
*S.A.T. = SELECTED AT TEST.

General Schematic of Portable Alpha Proportional Counter

ALPHA COUNTER (PROPORTIONAL, PORTABLE)

Characteristics

1. Radiation detected: Alpha.
2. Ranges: $\times 1$, $\times 10$, $\times 100$.
3. Sensitivity: 1000 counts/min, full scale, range, $\times$ 1.
4. Geometry: 10 to 20% of 4π for Pu^{239}.
5. Accuracy: Maximum error is $\pm 10\%$ of full scale.
6. Warmup time: Air chamber, 30 sec; gas-flow chamber, 3 min flushing time.
7. Power: Batteries.
8. Dimensions: Air ($8\frac{1}{4}$ in. long, 4 in. wide, 6 in. high); gas flow ($8\frac{1}{4}$ in. long, 4 in. wide, $9\frac{3}{4}$ in. high).
9. Weight: Air ($7\frac{1}{2}$ lb); gas flow (9 lb).

Application

1. May be used for alpha detection in presence of beta and gamma radiation.
2. The gas proportional counter may be used in areas of relatively high temperature and humidity.
3. The air chamber cannot be used in areas of relatively high temperature and humidity.
4. Three ranges: 1000, 10,000, and 100,000 counts/min.
5. Disconnecting the earphone does not affect the operation of the counter.
6. The gas bottle will hold approximately a 24-hr supply of gas.
7. The chamber has a window area of 61 cm^2 with a 0.85-mg/cm^2 double-coated Mylar window.
8. May be sensitive to beta-gamma radiation if high voltage and discriminator are not properly adjusted.

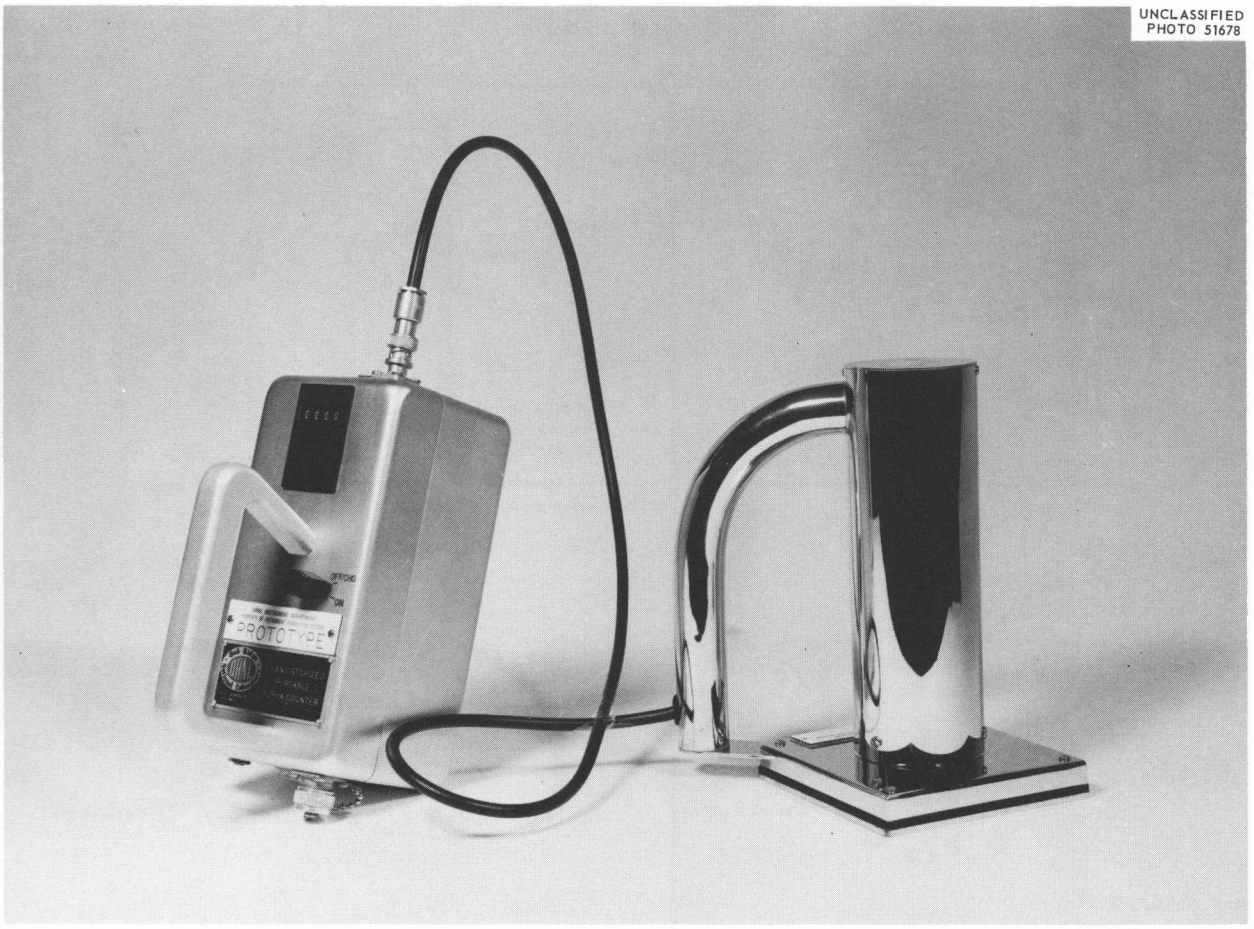

Alpha-Scintillation Counter (Portable)

The portable scintillation counter is a battery-powered, transistorized, amplifier with a high-voltage supply especially designed for use with an alpha scintillation probe. The device registers accumulated counts, thus obviating the difficulty of reading low counting rates on a meter. An output for earphone operation is also provided. The power is supplied by nickel-cadmium cells, which are kept charged by a plug-in trickle charger operated from 110 v, 60 cycles. The probe employs a 2-in. photomultiplier, a zinc sulfide phosphor, and a lighttight window. It is relatively free of microphonics and is relatively insensitive to beta and gamma radiation.

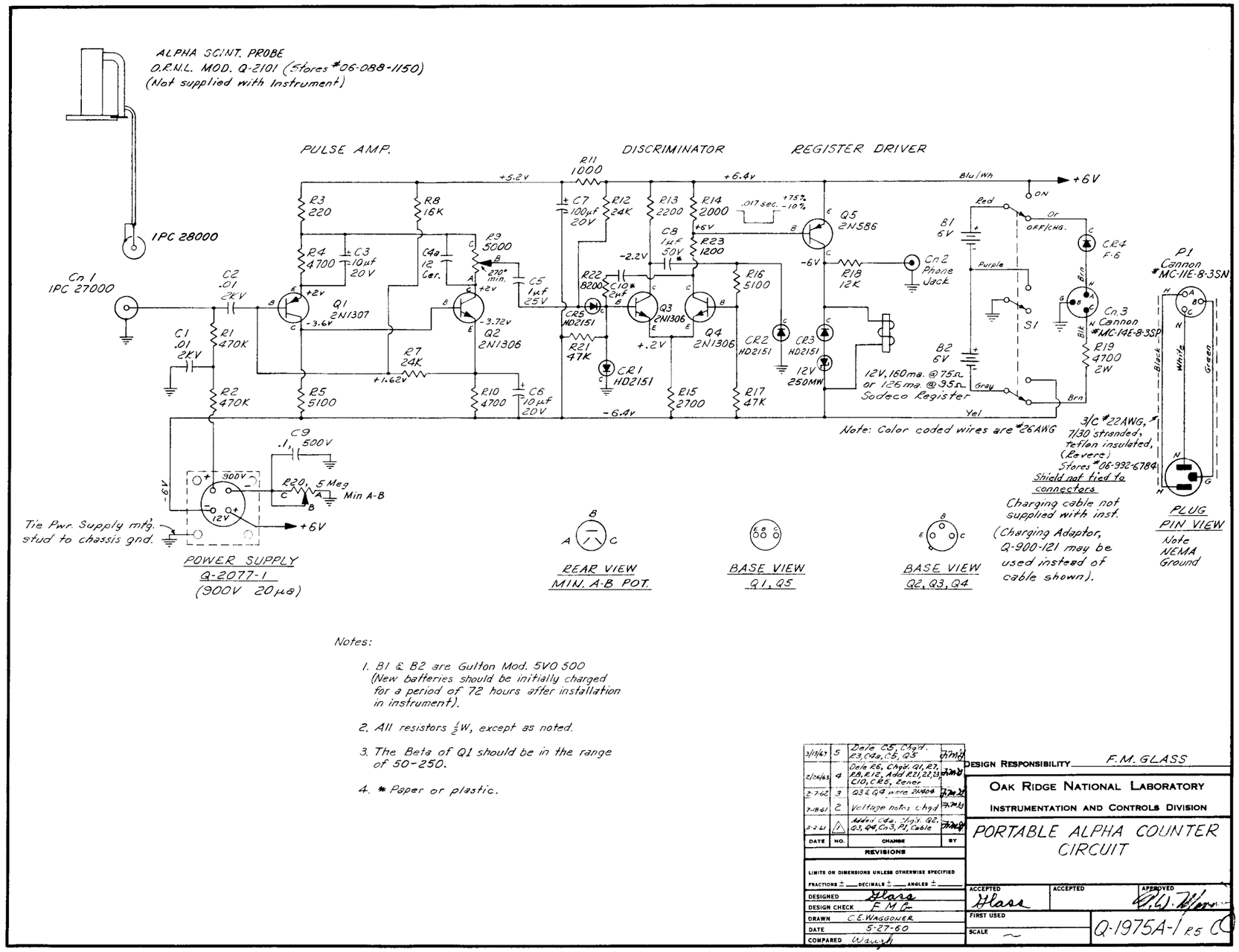

Notes:

1. B1 & B2 are Gulton Mod. 5VO 500 (New batteries should be initially charged for a period of 72 hours after installation in instrument).
2. All resistors ½W, except as noted.
3. The Beta of Q1 should be in the range of 50-250.
4. * Paper or plastic.

DATE	NO.	CHANGE	BY
3/13/63	5	Data CB, Chgd. R3, C4a, C5, Q5	FMG
2/26/63	4	Data R6, Chgd. Q1, R7, R8, R12, Add R21, 22, 23, C10, CR5, Zener	FMG
2-7-62	3	Q3 & Q4 were 2N404	FMG
7-18-61	2	Voltage notes chgd	FMG
3-2-61	1	Added C4a, Chgd. Q2-Q3, Q4, Cn 3, P1, Cable	FMG

REVISIONS

LIMITS ON DIMENSIONS UNLESS OTHERWISE SPECIFIED
FRACTIONS ± ___ DECIMALS ± ___ ANGLES ± ___

DESIGNED Glass
DESIGN CHECK F.M.G.
DRAWN C.E. WAGGONER
DATE 5-27-60
COMPARED Waggoner

DESIGN RESPONSIBILITY F.M. GLASS

OAK RIDGE NATIONAL LABORATORY
INSTRUMENTATION AND CONTROLS DIVISION

PORTABLE ALPHA COUNTER CIRCUIT

ACCEPTED Glass | ACCEPTED | APPROVED W.J. Wiss

FIRST USED

SCALE ~

Q-1975A-1 RS C

Circuit Diagram of Alpha Scintillation Counter, Portable

ALPHA-SCINTILLATION COUNTER (PORTABLE)

Characteristics

1. Radiation detected: Alpha.
2. Ranges: Limit of response of mechanical register (approximately 500 counts/min).
3. Sensitive area of detector: 70% of 100 cm^2.
4. Background: 2 counts/min or less.
5. Signal: 100 mv or greater at 1000 v.
6. Indicating devices: Earphone and register.
7. Geometry: 10 to 15% of 4 π for Pu^{239}.
8. Warmup time: Less than 30 sec.
9. Power: Nickel-cadmium cells.
10. Dimensions: Chassis (6 in. long, 5 $\frac{1}{2}$ in. high, 5 in. wide), probe (5 × 5 × 7 $\frac{1}{2}$ in.)
11. Weight: 4 lb.

Application

1. Probe face must be at near contact (within $\frac{1}{4}$ in.) with the source of radiation for adequate sensitivity.
2. A moderate background, 5 to 500 counts/min, is probably due to contamination. The high background is probably due to the penetration of visible light into the phosphor assembly.
3. The probe should be moved slowly over the surface being monitored if low levels of activity are to be detected.
4. Do not allow the probe face to contact objects which may puncture the extremely thin (0.0001 in.) lighttight window.
5. The "permanent" battery should be kept charged; connect it to the charger when the instrument is not in use.

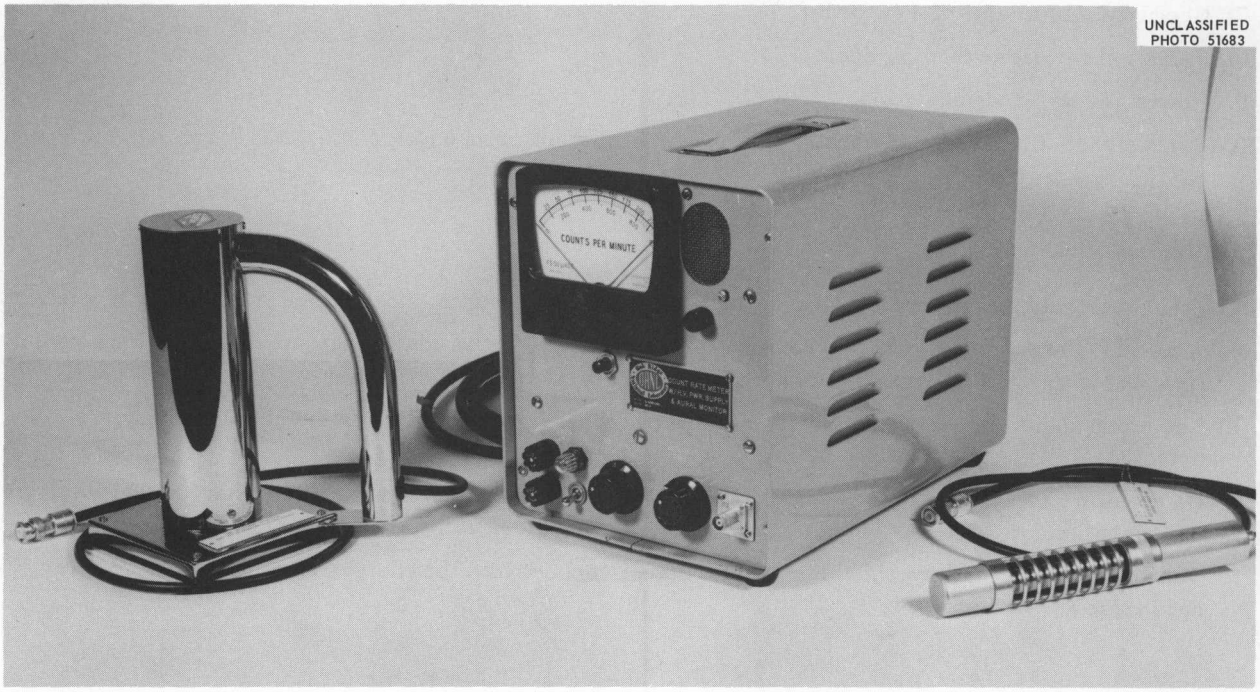

Alpha or Beta-Gamma Monitor (AC Powered)

This monitor consists of a versatile counting-rate meter, ac powered, and either a zinc sulfide scintillation probe for alpha detection or a G-M counter probe for beta-gamma detection.

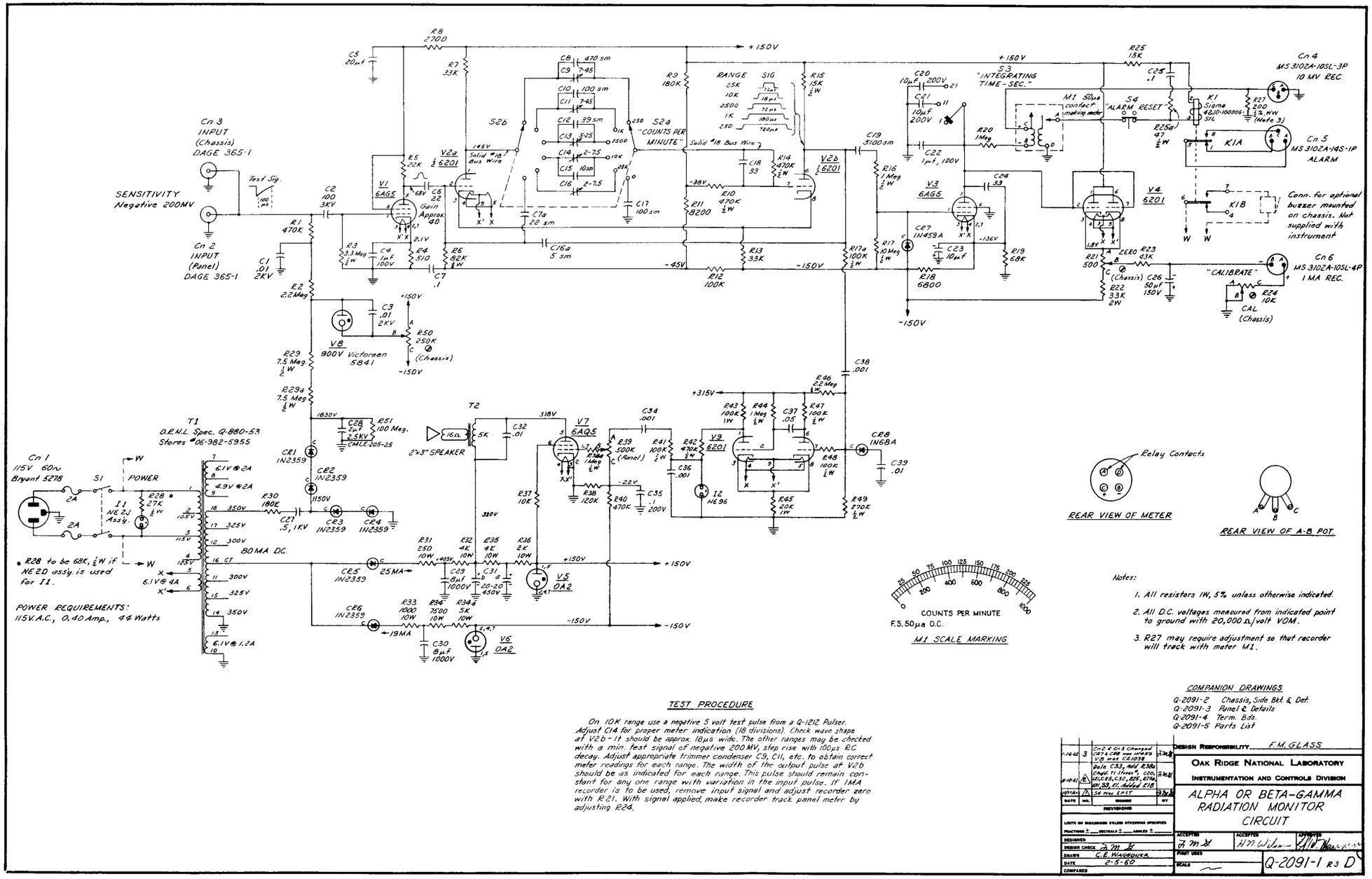

TEST PROCEDURE

On 10K range use a negative 5 volt test pulse from a Q-1212 Pulser. Adjust C14 for proper meter indication (18 divisions). Check wave shape at V2b-1 it should be approx. 18µs wide. The other ranges may be checked with a min. test signal of negative 200 MV, step rise with 100µs RC decay. Adjust appropriate trimmer condenser C9, C11, etc. to obtain correct meter readings for each range. The width of the output pulse at V2b should be as indicated for each range. This pulse should remain constant for any one range with variation in the input pulse. If 1MA recorder is to be used, remove input signal and adjust recorder zero with R21. With signal applied, make recorder track panel meter by adjusting R24.

Notes:

1. All resistors 1W, 5% unless otherwise indicated.
2. All D.C. voltages measured from indicated point to ground with 20,000 Ω/volt VOM.
3. R27 may require adjustment so that recorder will track with meter M1.

COMPANION DRAWINGS

Q-2091-2 Chassis, Side Bkt. & Det.
Q-2091-3 Panel & Details
Q-2091-4 Term. Bds.
Q-2091-5 Parts List

1-16-62	3	Cn2 & Cn3 Changed to 4 CRM CR-10609 V8 was CR-1038	J.T.M.
6-10-61	2	Delete C33, Add R38a; Chgd. T1 Stores #, CR0, 1N1C25, C35, R39, R39a, R41, R43, R47, Added R48	J.T.M.
4-27-61	1	36 Was SPST	J.T.M.
DATE	NO.	REVISIONS	BY

LIMITS OF DIMENSIONS UNLESS OTHERWISE SPECIFIED
FRACTIONS ± ___ DECIMALS ± ___ ANGLES ± ___
DESIGNED
DESIGN CHECK J.T.M.
DRAWN C.E. WAGGONER
DATE 2-5-60
COMPARED

DESIGN RESPONSIBILITY F.M. GLASS

OAK RIDGE NATIONAL LABORATORY
INSTRUMENTATION AND CONTROLS DIVISION

ALPHA OR BETA-GAMMA RADIATION MONITOR CIRCUIT

ACCEPTED	ACCEPTED	APPROVED
J.T.M.	H.M.W.	F.M.G.

PRINT USED
SCALE —
Q-2091-1 R3 D

Circuit Diagram of Alpha Monitor Count-Rate Meter

ALPHA OR BETA-GAMMA MONITOR (AC POWERED)

Characteristics

1. Radiation detected: Alpha.
2. Ranges: 250, 1,000, 2,500, 10,000, and 25,000 counts/min.
3. Sensitive area of detector: 70% of 100 cm^2.
4. Background: 2 counts/min or less.
5. Indicating devices: Panel meter and speaker.
6. Detector efficiency: 25% for Pu^{239} alpha particles.
7. Alarm: Output for 110-v signaling device.
8. Recorder: Outputs for 1-ma or 10-ma recorder.
9. Power: 110 v, 60 cycles, 1 amp.
10. Dimensions of rate meter: 13 in. deep, 8 in. wide, $9\frac{1}{2}$ high.

Application

1. Probe face must be at near contact with source of radiation for adequate sensitivity.
2. A moderate background, 5 to 500 counts/min, is probably due to contamination. High background is probably due to penetration of visible light into phosphor assembly.
3. The probe should be moved slowly over the surface being monitored if low levels of activity are to be detected.
4. Do not allow probe face to contact objects which may puncture the extremely thin (0.001 in.) lighttight window.

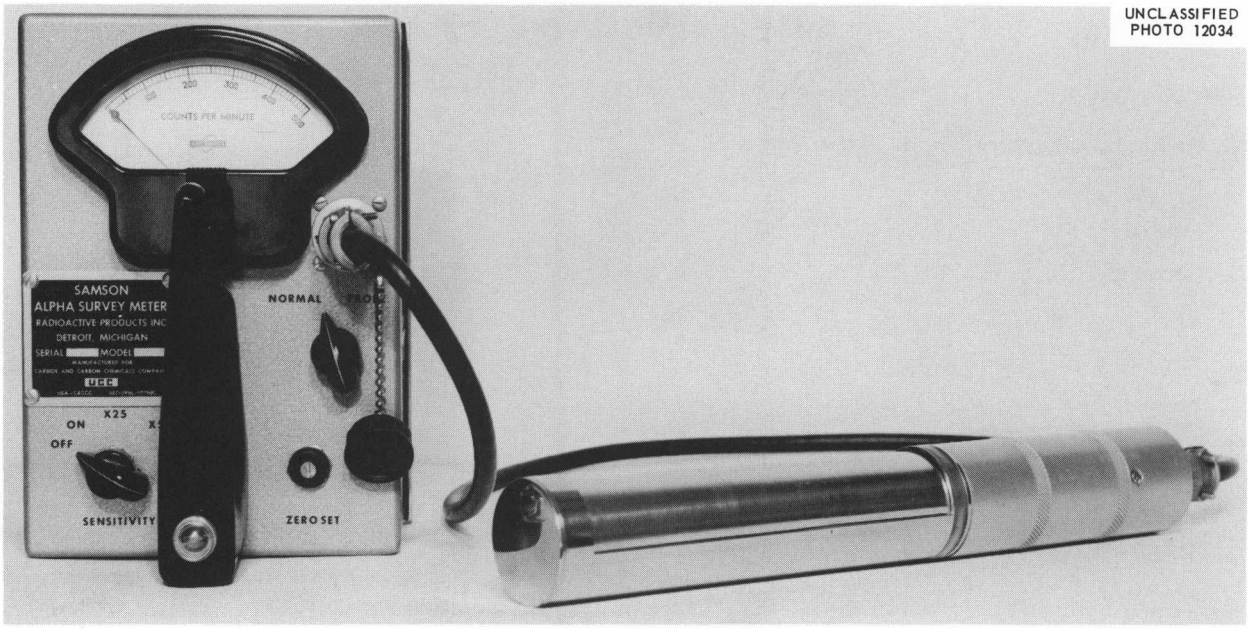

Alpha Survey Meter (Samson)

The Samson is a sensitive, portable air-ionization chamber with a high-gain amplifier and rate meter for measuring alpha radiation. Some models have an auxiliary probe for use in monitoring beta and gamma radiation.

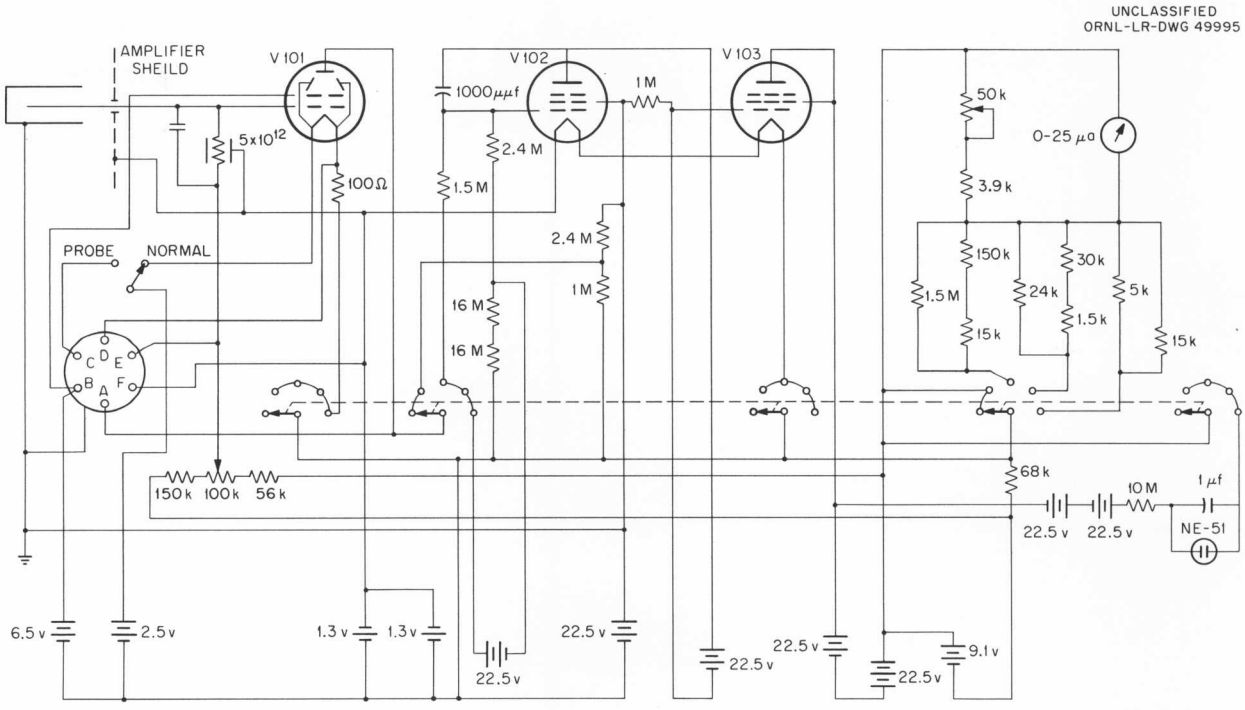

Circuit Diagram of Samson Survey Meter

ALPHA SURVEY METER (SAMSON)

Characteristics

1. Radiation detected: Alpha, beta, gamma.
2. Ranges: ×1, ×5, ×25.
3. Sensitivity: 500 counts/min, full scale, ×1.
4. Geometry: 30 to 40% for Pu^{239}.
5. Accuracy: Maximum error is ±10% of full scale.
6. Warmup time: 2 to 3 min.
7. Power: Batteries.
8. Dimensions: $8\frac{1}{4}$ in. long, $5\frac{1}{8}$ in. wide, $7\frac{1}{4}$ in. high.
9. Weight: 5 lb.

Application

1. Ionization chamber is sensitive to alpha, beta, and gamma radiation.
2. Instrument is calibrated only for alpha radiation.
3. An external shield should be used to determine if radiation other than alpha is present.
4. Sensitive area of chamber should be in contact with surface being surveyed.
5. Instrument should be properly zeroed before use.
6. Instrument should be turned on for 2 min before use.
7. The probe is sensitive to beta and gamma radiation.
8. The probe is calibrated for gamma radiation.

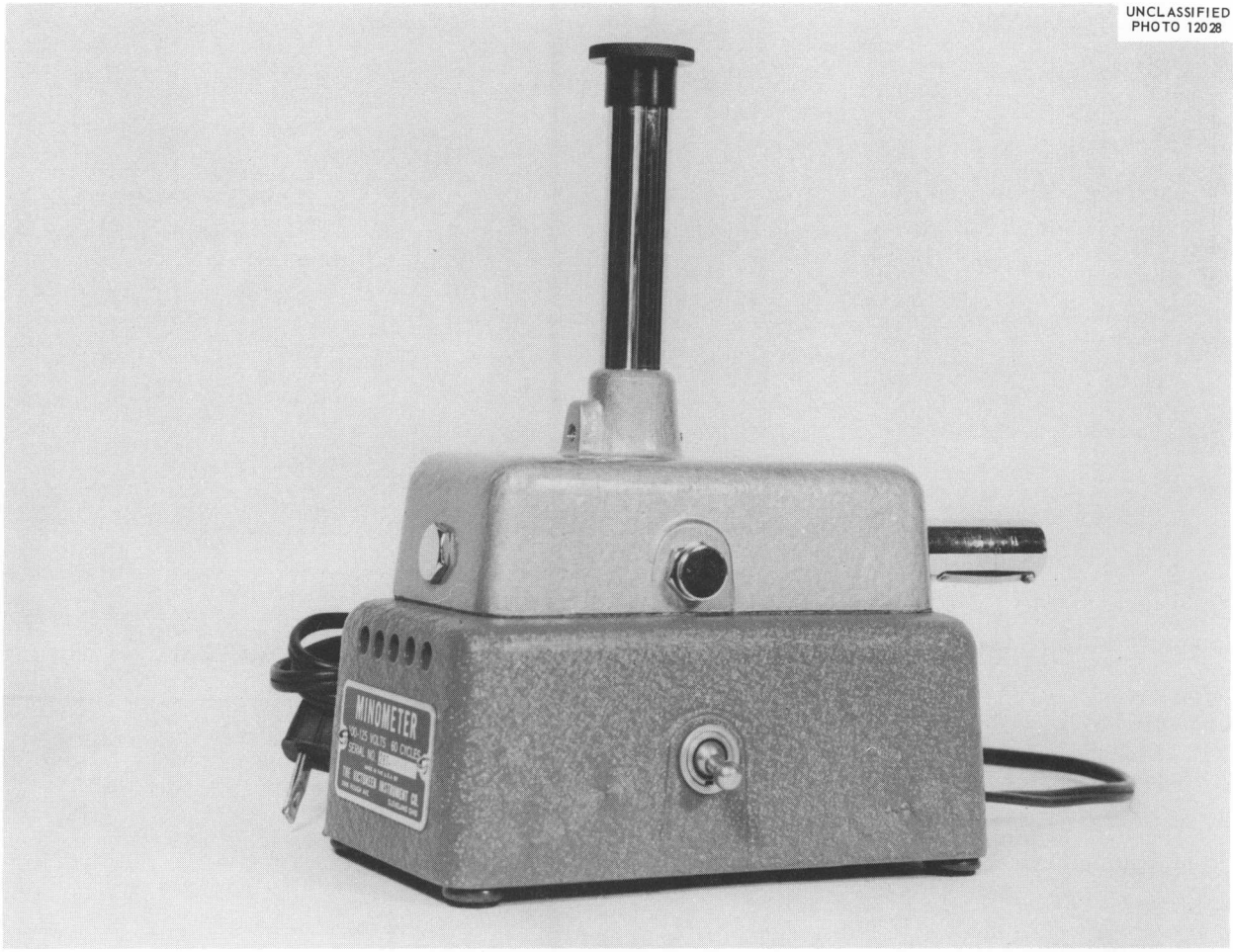

Charger-Reader for Pocket Ionization Chambers (Minometer)

The Minometer is a string electrometer with a socket into which a pocket chamber may be inserted for charging and reading. The string may be viewed directly through a microscope, or its image may be projected on an illuminated scale. The displacement of the string is proportional to the potential on the electrometer. The string electrometer and pocket chamber are charged to the same potential; the pocket chamber is then removed and worn. It is subsequently reinserted into the socket for reading purposes. Any change in potential on the pocket chamber causes a deflection of the string proportional to the radiation dose received.

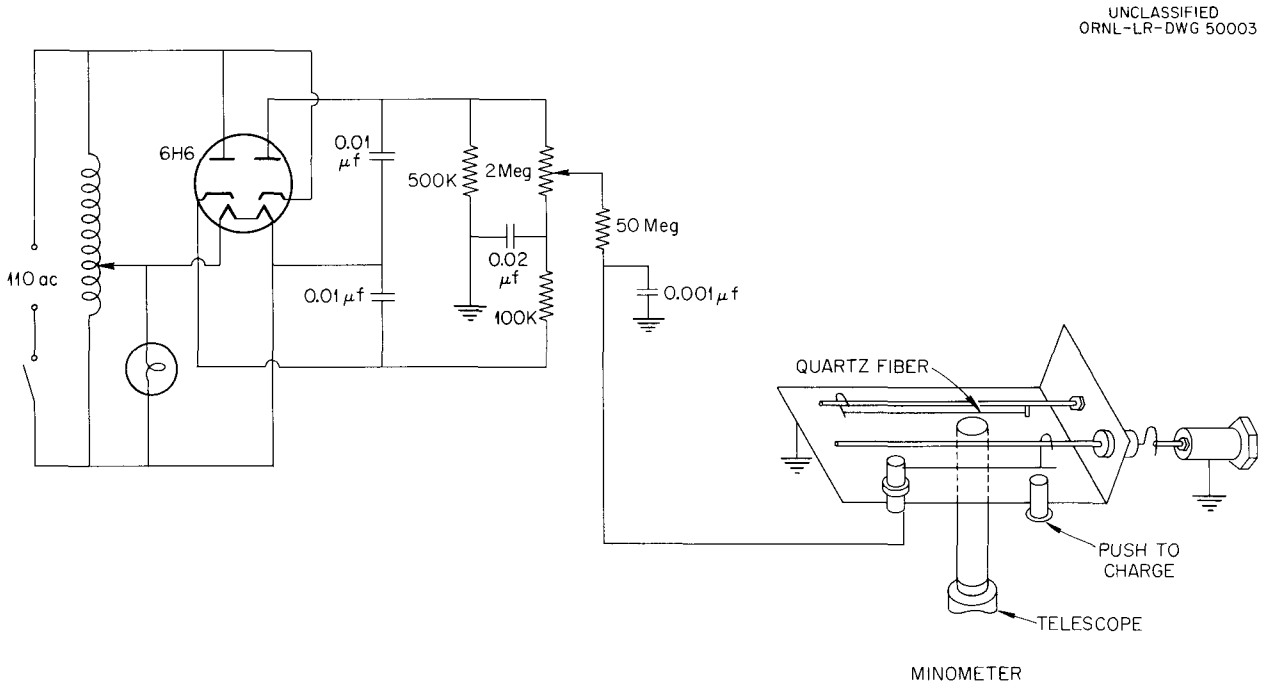

Circuit Diagram for Minometer

CHARGER-READER FOR POCKET IONIZATION CHAMBERS (MINOMETER)

Characteristics

1. Range: Same as that of associated ion chamber.
2. Accuracy: Within ±10% of full scale.
3. Indicating device: Direct or indirect image of charged string.
4. Power: 110 v, 60 cycles, 20 w.
5. Dimensions: 8 × 4 × 6 in.
6. Weight: 6 lb.

Application

1. Designed to charge and read the discharge in terms of milliroentgens on pocket ionization chambers.
2. A discharge of approximately 40 v corresponds to 200 mr.
3. The scale in the minometer is calibrated in milliroentgens from 0 to 200.
4. The instrument should be turned on for 12 to 24 hr before using.
5. When fully discharged, the fiber should rest on the "Z" line.
6. When fully charged, the fiber should lie on the zero line of the scale.
7. Leakage check should be made before use.
8. Fiber should be focused sharply.
9. The instrument is calibrated by use of pocket chambers and a radium source.

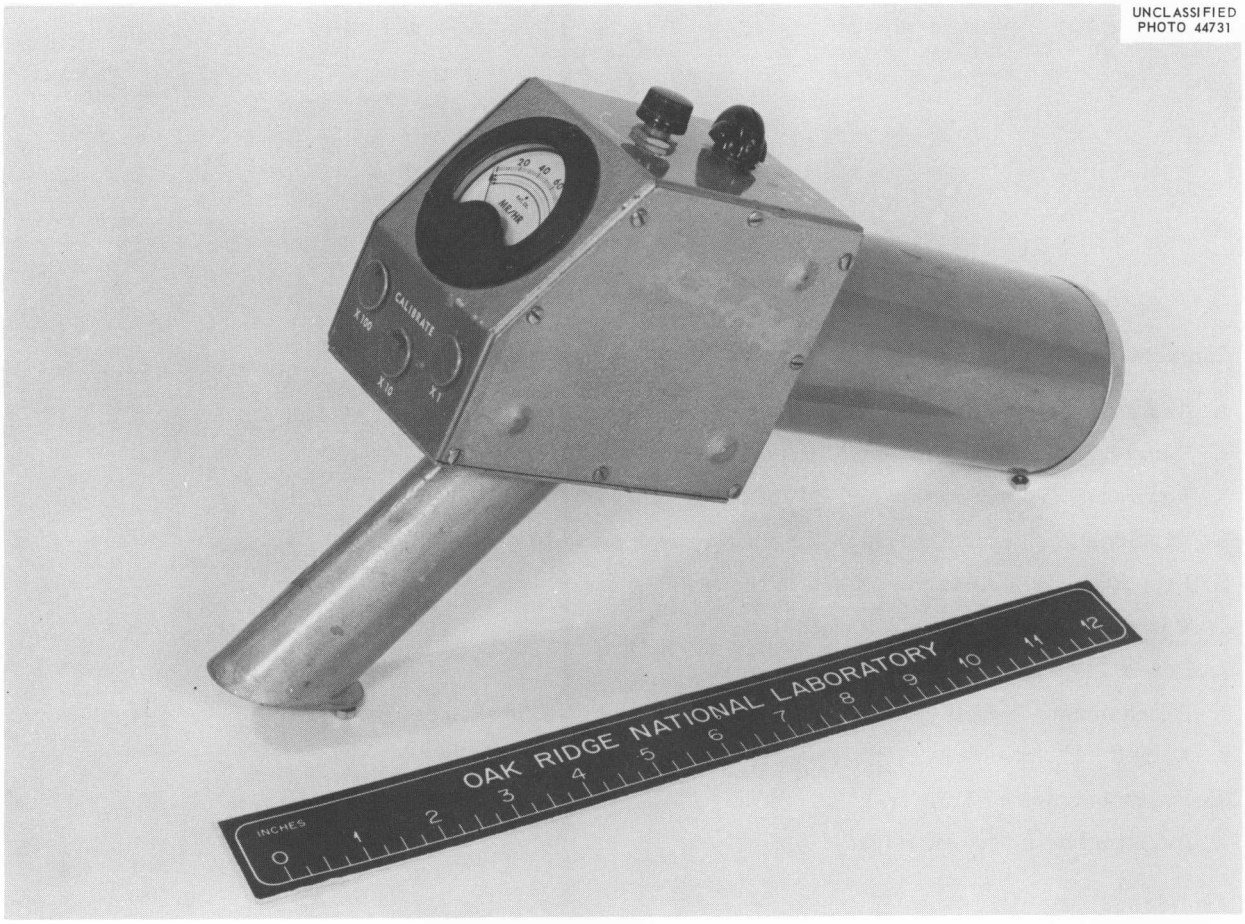

Cutie Pie (Standard Model)

This is a relatively small, lightweight, portable survey instrument used for the measurement of gamma dose rates. It is used also for the indication of beta and thermal-neutron radiation.

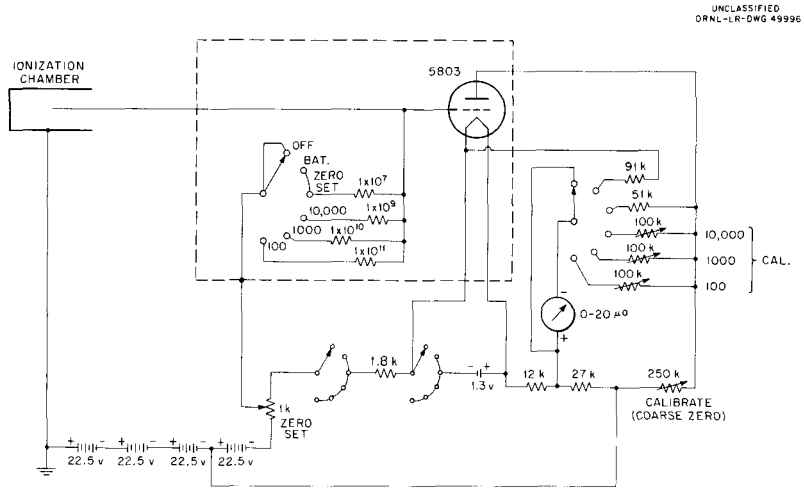

Circuit Diagram of ORNL Cutie Pie

CUTIE PIE (STANDARD MODEL)

Characteristics

1. Radiation detected: Beta, gamma, x ray.
2. Ranges: 100, 1,000 and 10,000 mr/hr, full scale.
3. Accuracy: Maximum error is ±10% of full scale.
4. Wavelength dependence: ±10% for gamma and x rays, 10 to 2000 kev.
5. Response time: Less than 3 sec to reach full scale.
6. Warmup time: 10 sec.
7. Power: Batteries.
8. Dimensions: Overall (10 × 3 × 8 in.); chamber (6 × 3 in. in diameter).
9. Weight: $2\frac{3}{4}$ lb.
10. Paper thickness: 7 mg/cm^2.
11. Bakelite shell: $\frac{1}{16}$ in. thick.

Application

1. The instrument is calibrated with gamma radiation, incident normally to the lateral surface of the chamber, for full-scale readings of 100, 1,000 and 10,000 mr/hr, full scale.
2. Beta radiation dose rates in tissue rads may be estimated within a factor of 2 by using the milliroentgen per hour readings.
3. In general, the indicated dose rate will be less than the true dose rate at the center of the chamber if the nearest portion of the chamber is less than 1 ft from the source of radiation. In particular, the dose rate at or near the surface of a small-size source may be grossly underestimated.
4. The instrument should not be used if the end or wall covering of the chamber is punctured.
5. The zero setting should be checked frequently during the first few minutes of use, and subsequently, at intervals not greater than 5 min.
6. The radiation response function of the instrument should be checked prior to each use.

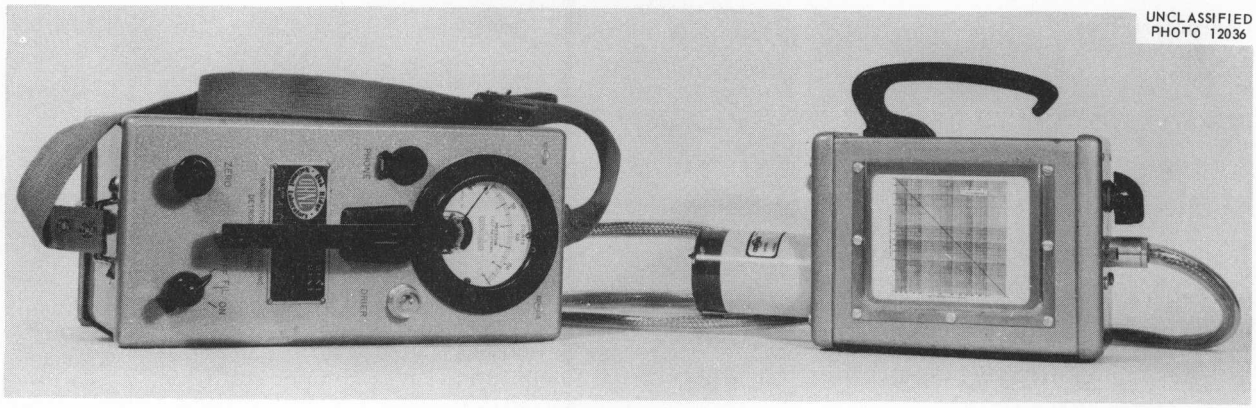

Dosimeter (Fast Neutron)

The fast-neutron dosimeter is used to measure dose rates (first-collision tissue rads) due to fast neutrons. Components include a proton-recoil proportional counter, an amplifier, a power supply, and a rate meter. The counter is moderately insensitive to gamma radiation.

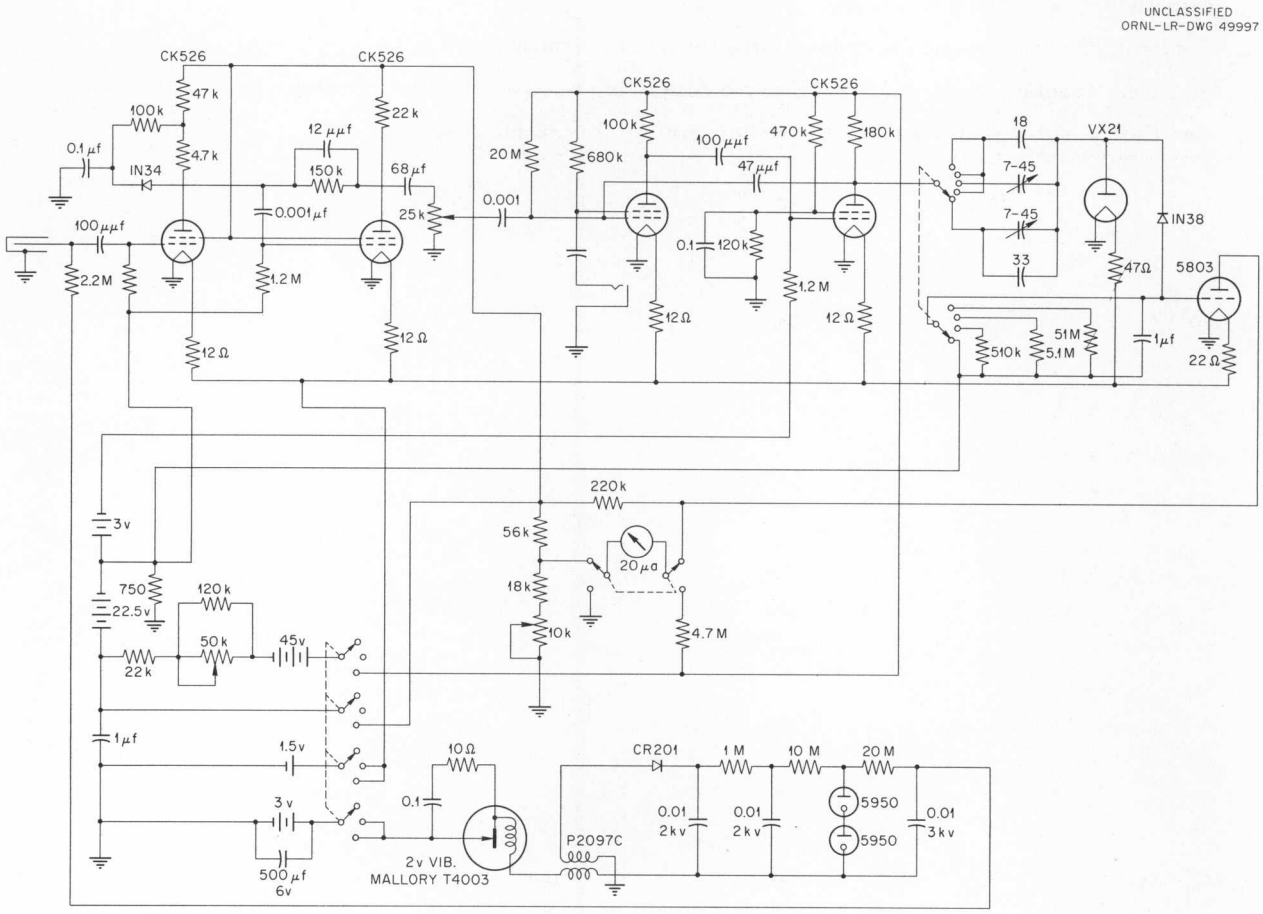

Circuit Diagram of Fast-Neutron Dosimeter

DOSIMETER (FAST NEUTRON)

Characteristics

1. Radiation detected: Fast neutrons.
2. Ranges: 5, 50, and 500 mrad/hr, plus integrating range.
3. Energy response: Tissue-equivalent response for neutron energies of 0.2 to 10 Mev.
4. Directional response: 1 to 0.5, front to side of counter.
5. Indicating devices: Rate meter and earphone.
6. Warmup time: 3 min.
7. Power: Batteries.
8. Dimensions: Main compartment ($4\frac{3}{8}$ in. wide, $5\frac{1}{2}$ in. high, 10 in. long); counter unit (3 in. wide, 5 in. high, $6\frac{1}{2}$ in. long).
9. Weight: 10 lb.

Application

1. When properly adjusted is sensitive to fast neutrons only.
2. Should be allowed to warm up 3 min before use.
3. Zero should be carefully checked.
4. Accuracy of measurement depends on orientation of instrument.
5. Should be checked for gamma sensitivity before being used for measuring neutrons.
6. Familiarity with operating routine is necessary in interpreting results.

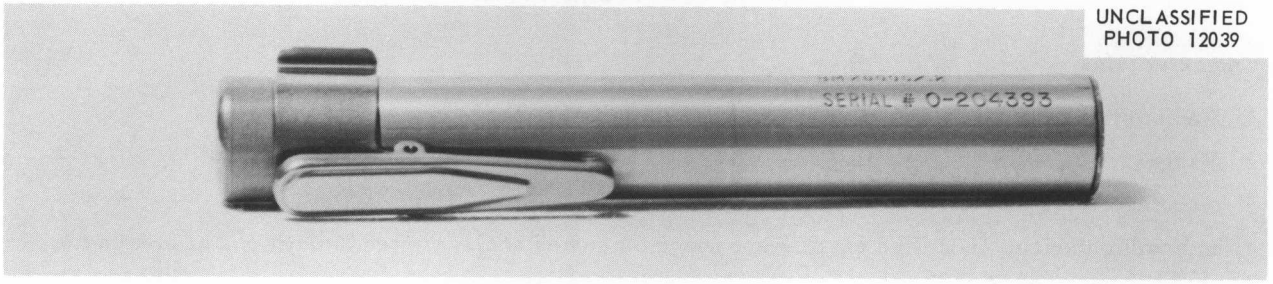

Dosimeter (Fiber Type)

The pocket dosimeter is a small, pencil-type ionization chamber containing a quartz-fiber electrometer unit. The fiber unit, mounted into one end of the instrument, is viewed through a lens from the opposite end. A rectifier circuit or battery supply is used to charge the dosimeter. After the dosimeter has been charged, the displacement of the fiber indicates the radiation dose to which the meter has been exposed.

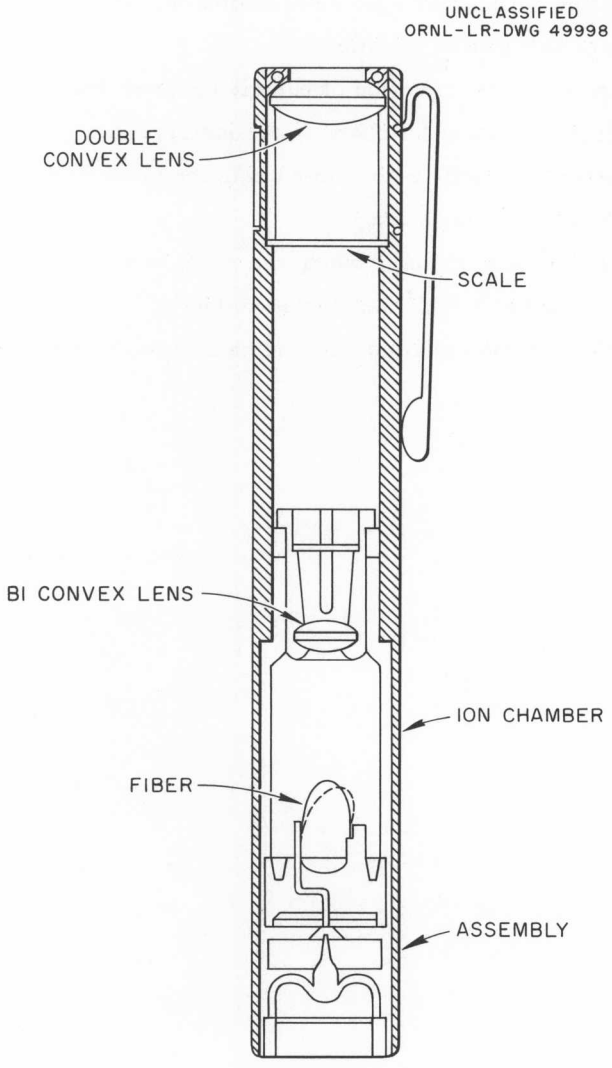

Cross Sectional View of Dosimeter (Fiber Type)

DOSIMETER (FIBER TYPE)

Characteristics

1. Radiation detected: Gamma (also thermal neutrons if chamber is coated with boron).
2. Ranges: Available in single ranges of 200, 500, 5,000, 10,000, 20,000, and 50,000 mr.
3. Accuracy: ±10% of full scale.
4. Indicating device: Magnified quartz-fiber image on etched scale, viewed through end of instrument.
5. Energy response: 0.1 to 3 Mev, ±5%.
6. Power: Charged by accessory variable voltage, 150 to 200 v; dc supply.
7. Dimensions: $\frac{1}{2}$ in. in diameter, 4 in. long.
8. Weight: 1 oz.

Application

1. The instrument will measure within ±10% gamma-radiation dosage from 5 to 200 mr (see 2 above).
2. It will not measure beta or soft gamma radiation.
3. The instrument may respond to beta radiation of energies greater than 1 Mev.
4. A separate charging unit is necessary for charging the instrument.
5. The fiber should be charged to exactly zero before using the instrument.
6. The instrument should be checked for leakage.
7. Attention should be given to the position in which the meter is worn and read.
8. The instrument is delicate and should be handled accordingly.
9. It is calibrated with radium gamma radiation, and the calibration factor is attached to the instrument.

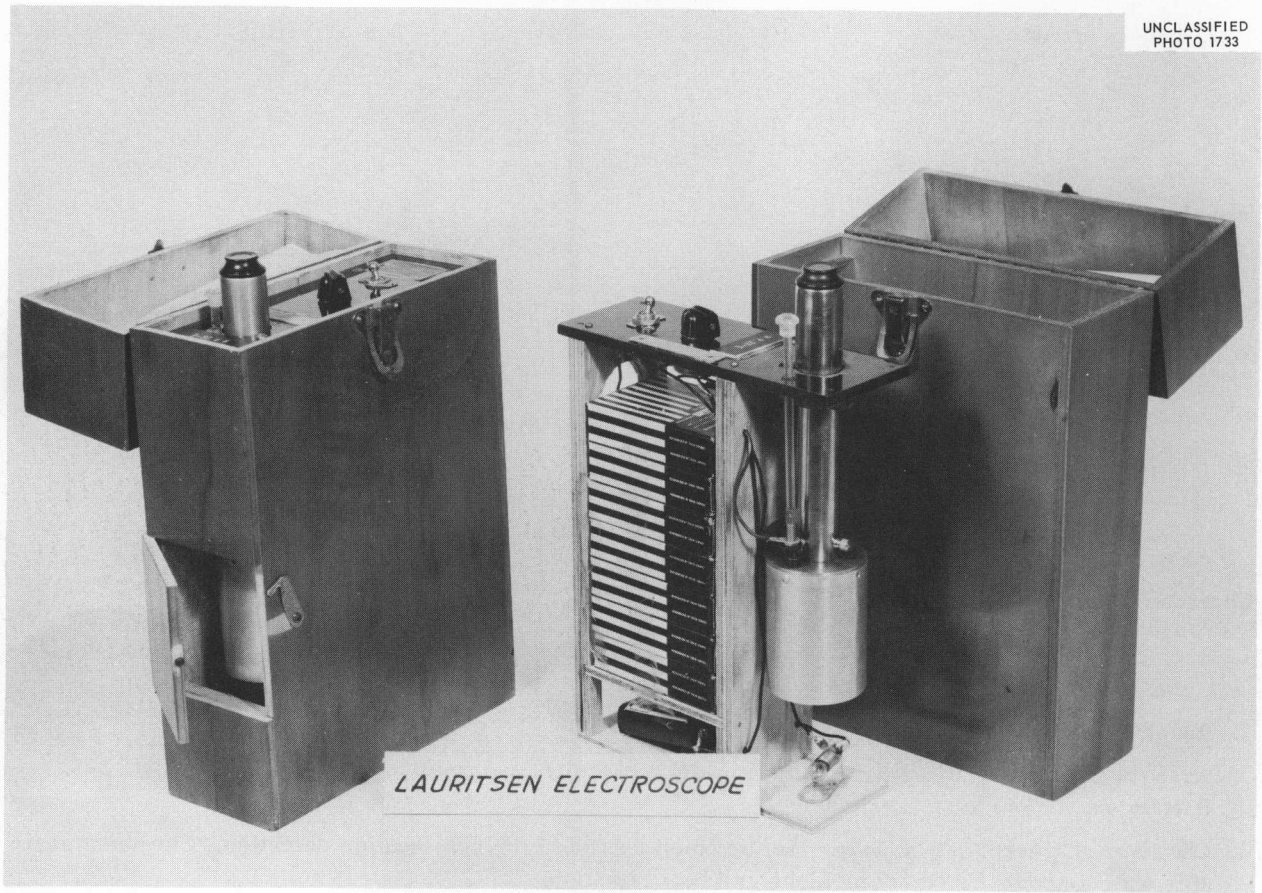

Electroscope (Lauritsen)

This electroscope is a medium-sized, portable survey instrument used for measuring gamma and indicating beta radiation. The instrument consists of an ion chamber and a quartz-fiber suspension system charged by means of a power supply which is a part of the unit. After the instrument is charged, the fiber is displaced at a rate proportional to the radiation dose rate. The inner surface of the ionization chamber, when coated with enriched boron, can be used for the measurement of thermal-neutron fluxes.

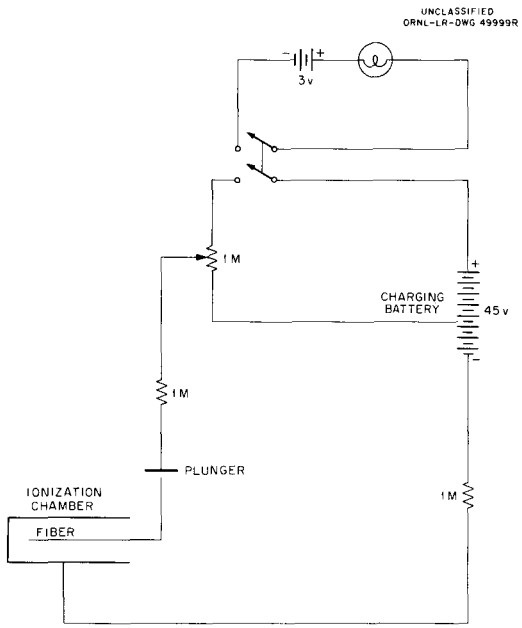

Circuit Diagram of Lauritsen Electroscope

ELECTROSCOPE (LAURITSEN)

Characteristics

1. Radiation measured: Gamma radiation and ionization due to beta radiation; also thermal neutrons if a boron-coated chamber is used.
2. Range: 1 to 1000 mr/hr.
3. Assembly: Consists of Fred C. Henson model 1 electroscope mounted in a portable plywood box. Battery supply and lamp are included.
4. Chamber: $2\frac{1}{4}$ deep, $2\frac{3}{4}$ in. long. May be boron-coated for thermal-neutron detection. Chambers available with windows for detecting alpha and beta radiation.
5. Accuracy: Measures hard gamma radiation to within ±5% in the range 1 to 1000 mr/hr.
6. Power: Batteries.
7. Dimensions: 8 in. long, 3 in. wide, 14 in. high.
8. Weight: 8 lb.

Application

1. With plywood window open, it is sensitive to hard beta radiation.
2. Calibrated for gamma radiation only, unless supplied with boron-coated chamber.
3. Instrument supplied with boron-coated chamber is calibrated in terms of thermal-neutron tolerance.
4. The instrument should be used only over the portion of the scale for which it is calibrated.
5. When applicable, the instrument should be charged for several minutes before use.
6. An accurate timer is necessary for proper use.
7. Distance from the source to the instrument is important in interpreting results.

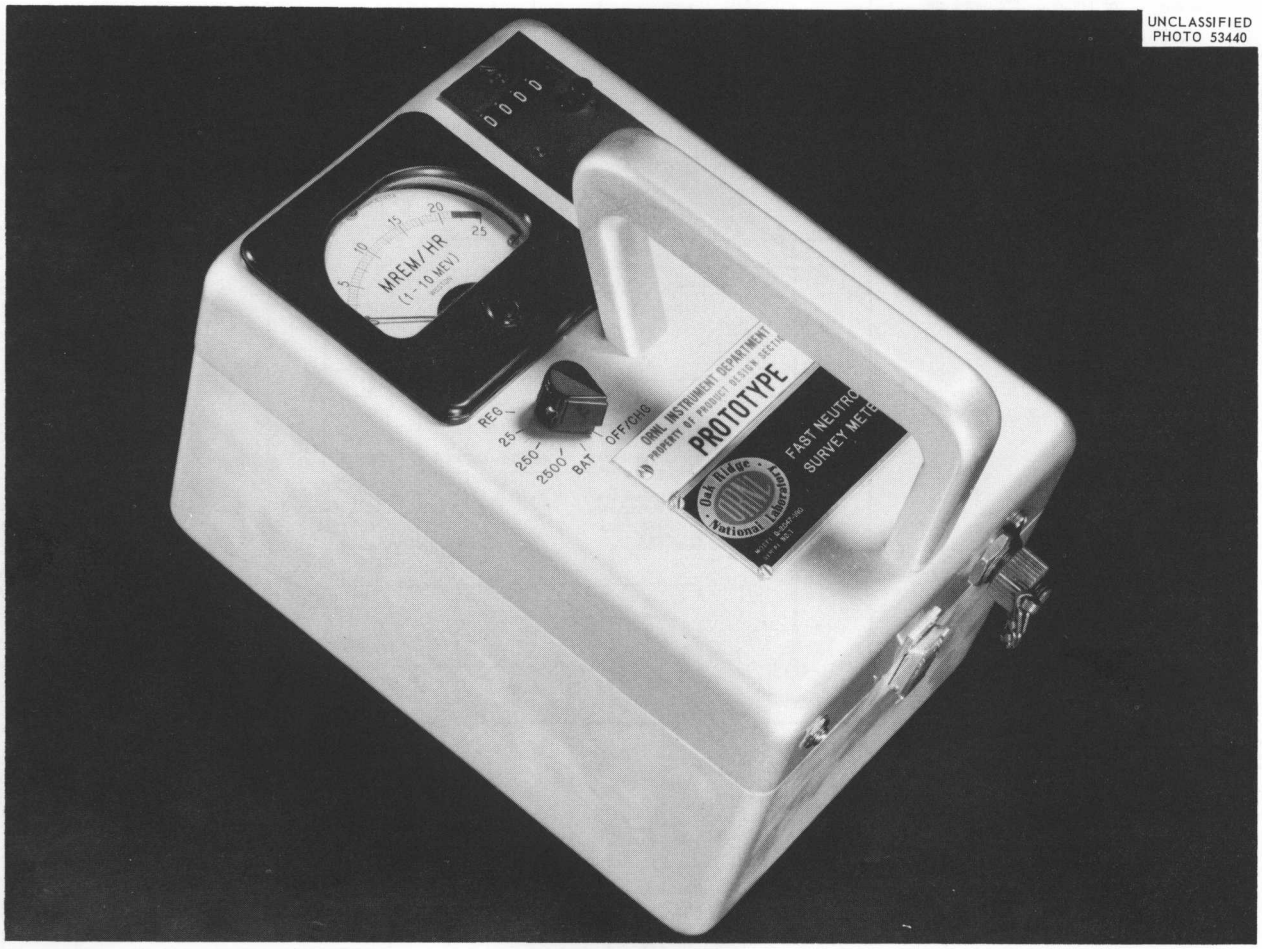

Fast-Neutron Survey Meter

This survey meter is an all-transistorized count-rate meter calibrated in terms of millirems per hour. The detector is a tissue-equivalent proportional counter. A register is provided for very low dose-rate measurement. Unique circuitry provides excellent discrimination against gamma radiation.

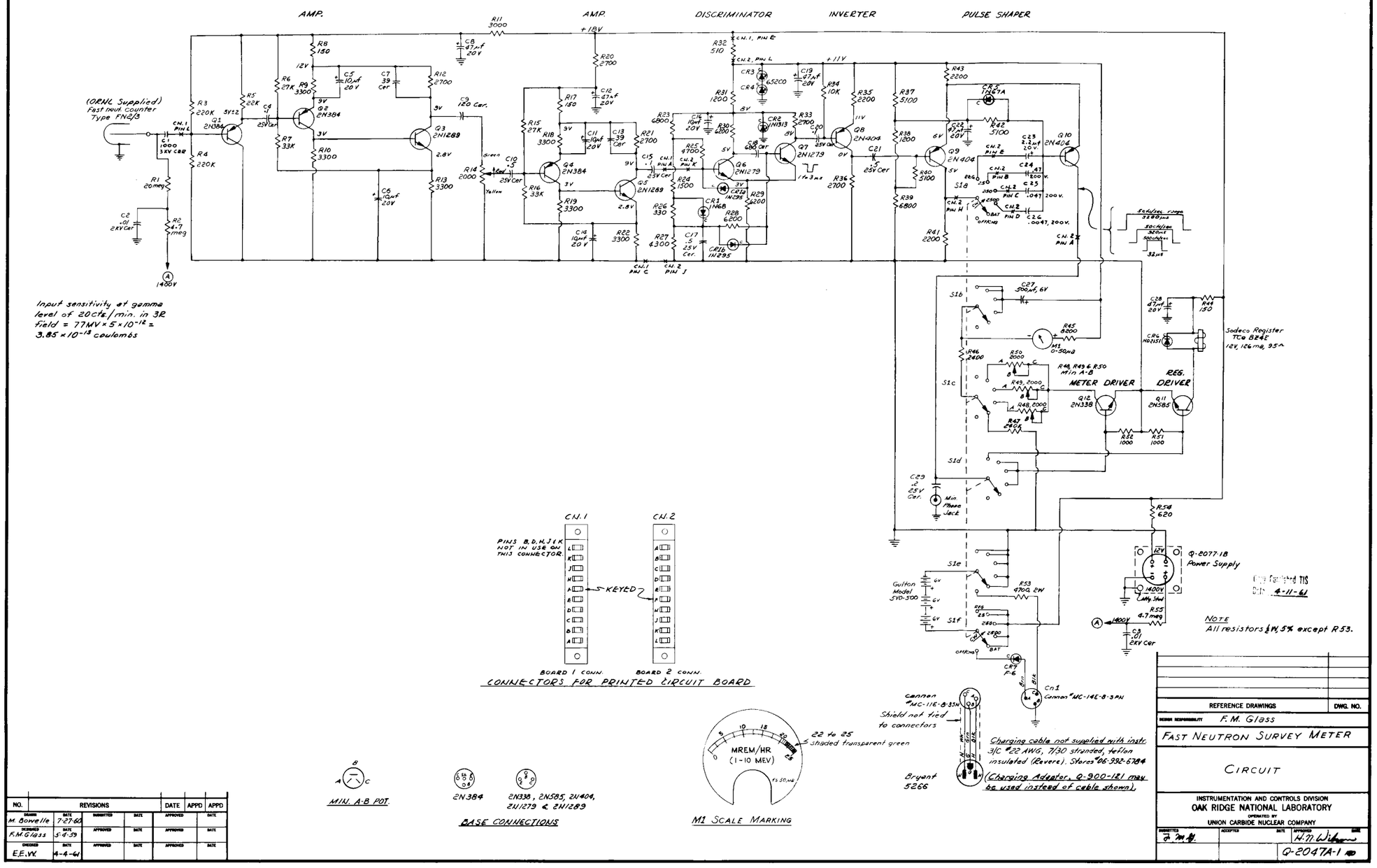

NO.	REVISIONS	DATE	APPD	APPD
DRAWN M. Bonnelle	DATE 7-27-60	SUBMITTED	DATE	APPROVED DATE
DESIGNED F.M.Glass	DATE 5-4-59	APPROVED	DATE	APPROVED DATE
CHECKED E.E.W.	DATE 4-4-61	APPROVED	DATE	APPROVED DATE

Schematic Circuit Diagram

FAST-NEUTRON SURVEY METER

Characteristics

1. Radiation detected: Fast neutrons.
2. Ranges: 25, 250, and 2500 mrem/hr, plus count register.
3. Energy response: ±20%, 0.2 to 10 Mev.
4. Directional response: None through the front, sides, or bottom of instrument.
5. Indicating device: Rate meter, register, and earphone.
6. Warmup time: 5 sec.
7. Power: Nickel-cadmium cells, with plug connector for charging from a 110-v circuit.
8. Dimensions: $8\frac{1}{2}$ in. long, 5 in. wide, $7\frac{1}{2}$ in. high.
9. Weight: $6\frac{3}{4}$ lb.

Application

1. When properly adjusted, it is sensitive only to fast neutrons.
2. Should be charged 3 hr for each hour of operation. Overcharging is not a problem.
3. Battery check should be made prior to use.
4. Register range may be used for integrating the dose.

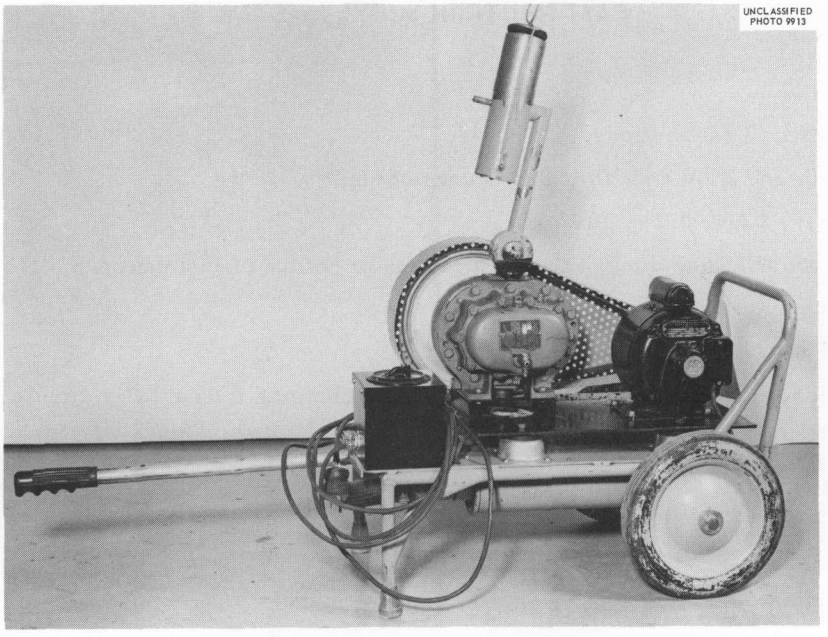

Filtron (Air-Sample Collector)

The Filtron is a semiportable, ac-operated device for collecting particulate matter in air samples with a paper filter. The principal components are an electric motor-blower unit, a filter holder, and a timer. The samples are analyzed with alpha and beta-gamma counting equipment.

FILTRON (AIR-SAMPLE COLLECTOR)

Characteristics

1. Radiation detected: Alpha, beta, and gamma from particulate matter in air.
2. Range: Limit of counting equipment.
3. Air flow rate: 3 to 5 ft^3/min.
4. Sample size: $9 \times 5\frac{1}{2}$ in.
5. Collection efficiency: 75% or greater for particles larger than 0.1 μ.
6. Timer: 5 to 60 min; may be operated for longer period without timer.
7. Duty cycle: Continuous.
8. Power: 110 v, 60 cycles, 3 amp.
9. Dimensions: 30 in. long, 18 in. wide, 24 in. high.
10. Weight: 90 lb.

Application

1. May be used wherever 110-v ac power is available.
2. Filter holder assembly should be snugly seated before operation.
3. Automatic timer, if supplied, should be used.
4. Not recommended for collection of alpha-contaminated particles.
5. Accuracy of the assay depends on accurate timing and proper air-flow rate.

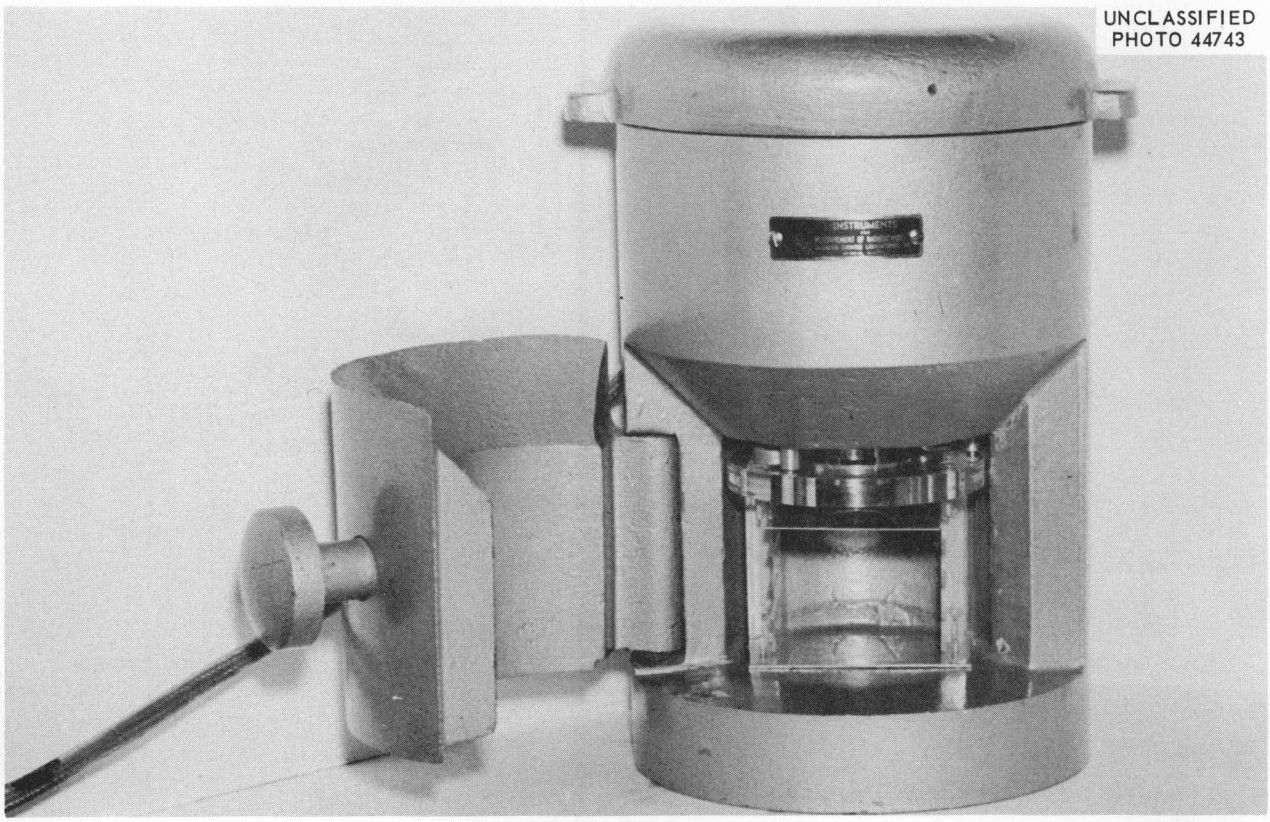

G-M Counter (End-Window Type)

This G-M counter has a thin mica window at one end. A cylindrical lead or iron shield houses the counter, which is usually mounted in the upper part of the cylinder, and the mica window is aimed downward. Located under the counter window is a slotted sample carrier, accessible through a hinged door. An absorber can be interposed in the slot between the sample and the counter window.

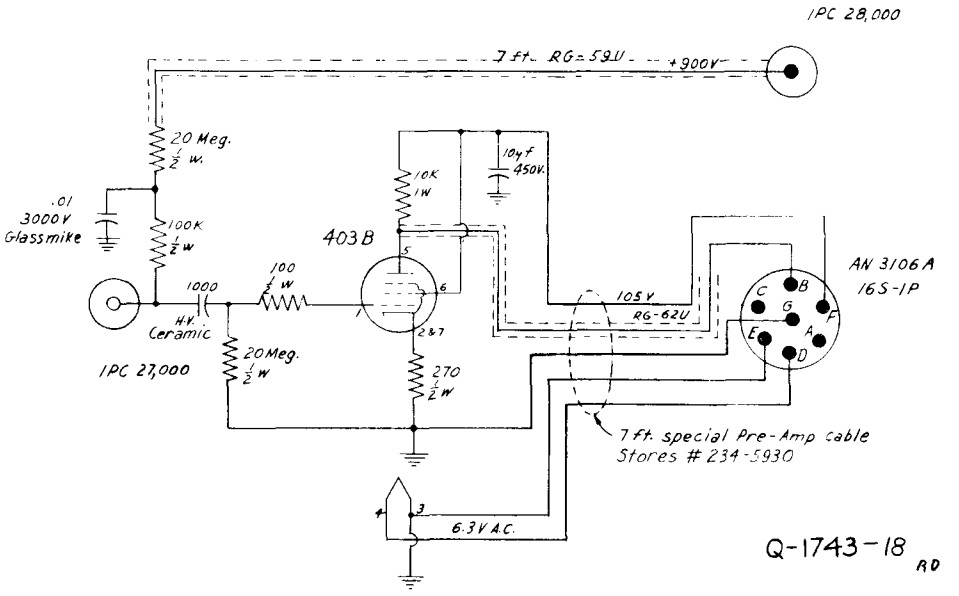

Circuit Diagram of Preamplifier for G-M Counter

G-M COUNTER (END-WINDOW) TYPE

Characteristics

1. Radiation detected: High-energy alpha, medium- and high-energy beta, and gamma.
2. Efficiency: 100% for beta and alpha radiation entering the counter; approximately 1% for gamma.
3. Geometry: Varies with shelf position and window thickness.
4. Shielding: Approximately 2 in. of lead and/or iron.
5. Preamplifier: Usually included within the shield.
6. Power requirements: 1000 to 1500 v at 50 ma for the counter; 150 v at 10 ma, and 6.3 v at 0.3 amp for the preamplifier.
7. Dimensions: 15 in. high, 9 ½ in. in diameter.
8. Weight: 180 to 250 lb.
9. Mica window: 1 to 1 ½ in. in diameter, 1.5 to 4.0 mg/cm^2 in thickness.

Application

1. For detecting and counting beta radiation of energies above 0.03 Mev.
2. It has less than 1% efficiency for gamma radiation.
3. It is a convenient counter to use for making beta-absorption studies.
4. The resolving time is about 100 to 200 μsec.
5. For accuracy, the sample diameters should be small compared with window diameter.
6. The geometry is from 6 to 10%, and the background is approximately 20 counts/min in a 2-in. lead shield.

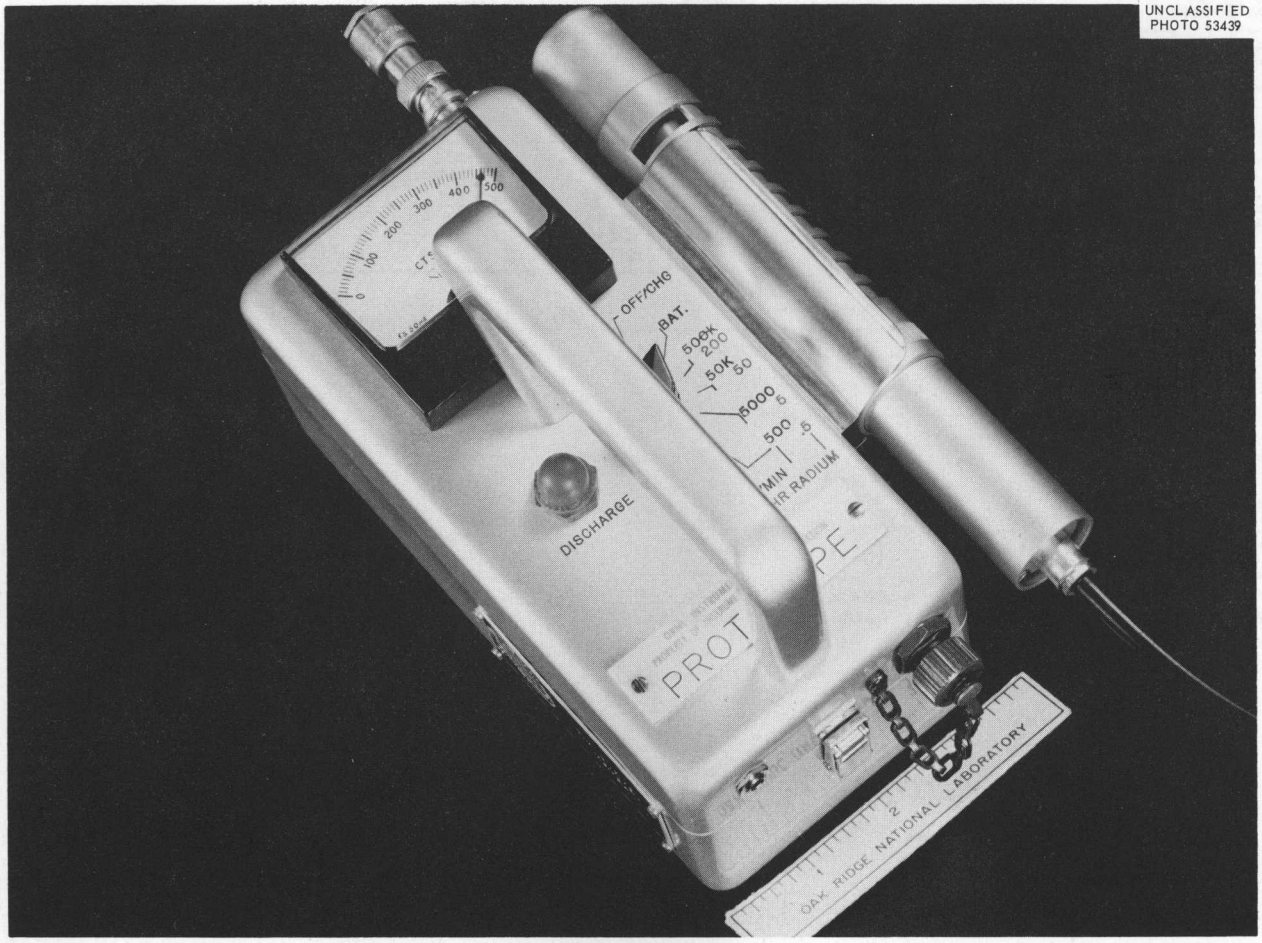

G-M Survey Meter

This survey meter is a medium-weight, portable, beta-gamma indicating survey instrument. Audible or visible indication of radiation is afforded by means of earphones and a count rate meter. The Q2092A survey meter (shown above) was designed to work in gamma-ray intensities up to and exceeding 500 r/hr.

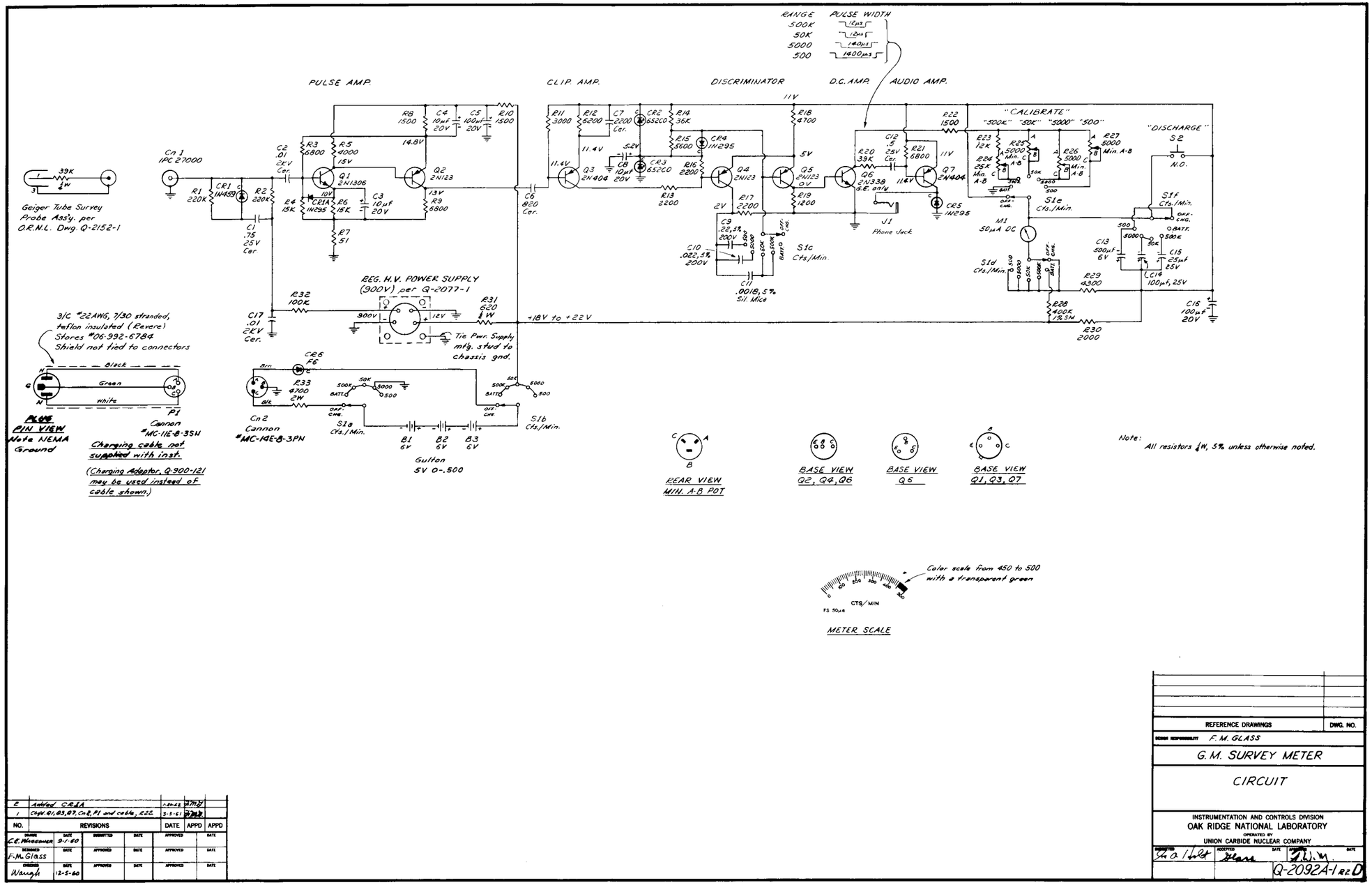

METER SCALE

NO.	REVISIONS	DATE	APPD	APPD
2	Added CR6A	1-20-61	[illegible]	
1	Chgd. R1, R3, R7, Cn2, P1 and cable, R22.	5-3-61	[illegible]	

DRAWN C.E. Wasson	DATE 9-1-60	SUBMITTED	DATE	APPROVED	DATE		
DESIGNED F.M. Glass	DATE	APPROVED	DATE	APPROVED	DATE		
CHECKED Waugh	DATE 12-5-60	APPROVED	DATE	APPROVED	DATE		

REFERENCE DRAWINGS	DWG. NO.
DESIGN RESPONSIBILITY F. M. GLASS	
G. M. SURVEY METER	
CIRCUIT	
INSTRUMENTATION AND CONTROLS DIVISION OAK RIDGE NATIONAL LABORATORY OPERATED BY UNION CARBIDE NUCLEAR COMPANY	
SUBMITTED G. A. Hurst DATE	ACCEPTED F. M. Glass DATE
APPROVED [illegible] DATE	Q-2092A-1 REV D

Circuit Diagram of G-M Survey Meter

G-M SURVEY METER

Characteristics

1. Radiation detected: Beta of energy greater than 0.2 Mev and gamma.
2. Ranges: There are four ranges providing full-scale calibrations of 500, 5,000, 50,000, and 500,000 counts/min. This corresponds roughly to 0.2, 2, 20, and 200 mr/hr.
3. Accuracy: The overall accuracy, considering accumulation effects of battery voltage, temperature, and nonlinearity, should be within ±7%.
4. Sensitivity: The sensitivity is adequate to detect gamma pulses in a field of 500 r/hr.
5. Probe: Connected to main instrument with 2 to 5 ft of cable. Sliding shield for beta-gamma differentiation.
6. Phone jack: Supplied for use with earphones.
7. High-voltage supply: Permanent-type battery with a built-in charger.

Application

1. Should not be used in measuring dosage rates, but rather as a detection instrument.
2. With shield open, the meter indicates beta radiation above approximately 0.2 Mev.
3. Indicates approximately the magnitude of gamma radiation between intensities of 0.05 and 200 mr/hr.
4. Should be used in conjunction with earphones, since they respond more quickly to pulses than the count-rate meter does.
5. Care should be exercised to prevent contamination of the probe.
6. Instrument is adjusted to read 10 mr/hr with shield closed in a radium gamma radiation field of 10 mr/hr.

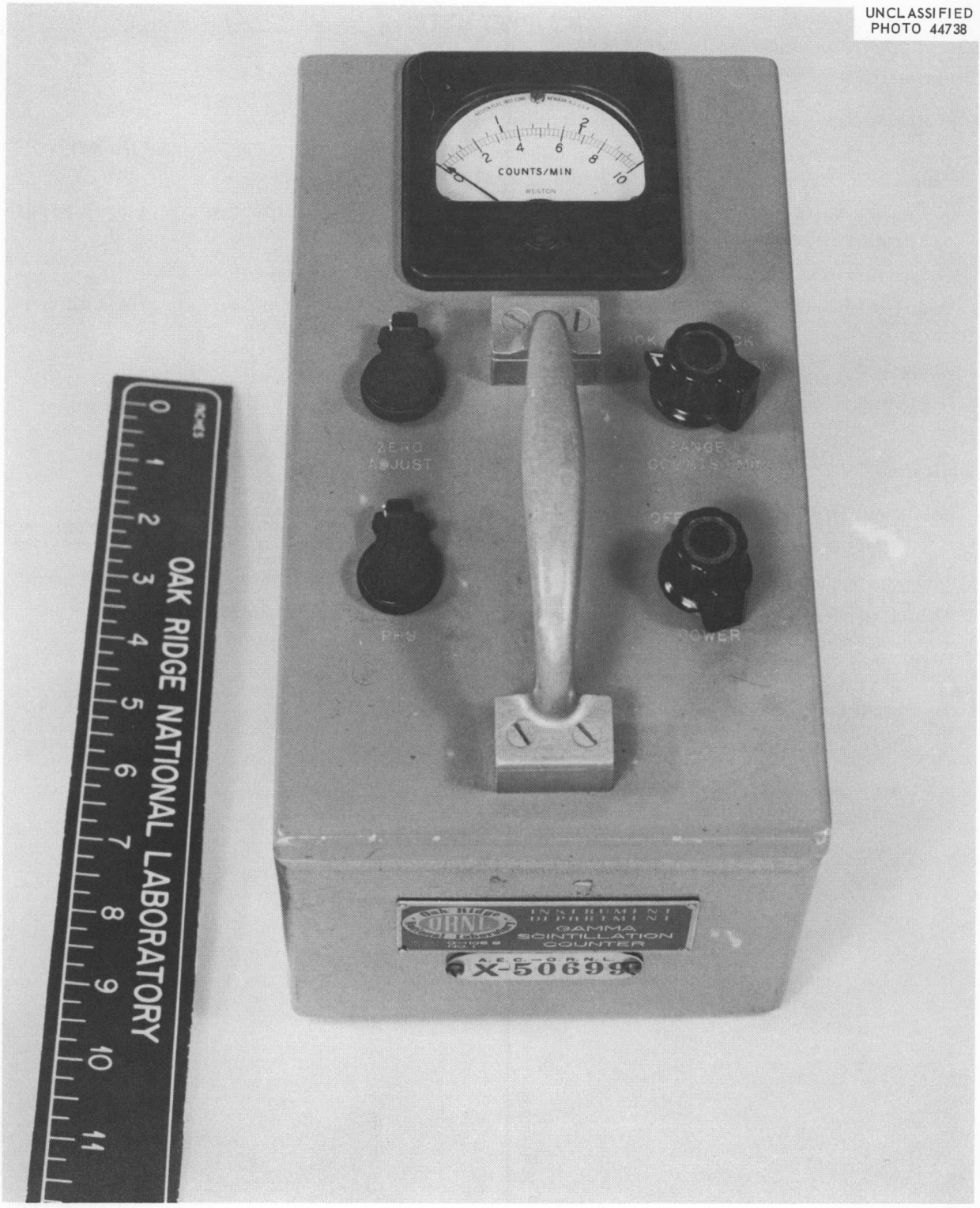

Gamma-Scintillation Counter (Portable)

The portable scintillation counter for gamma radiation incorporates a sodium iodide crystal, a photomultiplier, an amplifier, a high-voltage supply, and a rate meter. It detects and measures very low-level gamma radiation (0.001 mrad/hr). Sensitivity is a function of crystal size and photomultiplier gain.

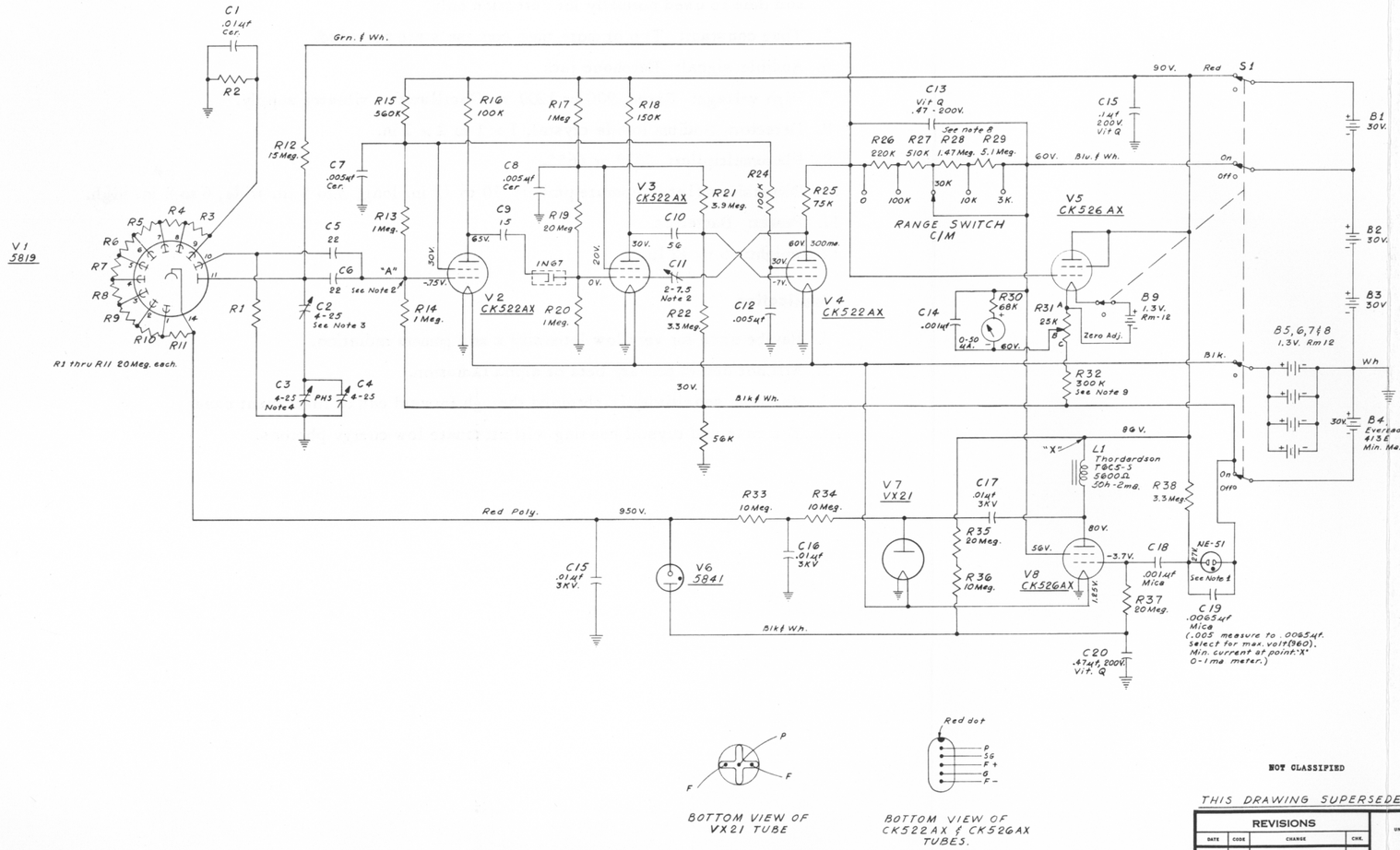

Circuit Diagram of Portable Scintillation Counter, Gamma

GAMMA-SCINTILLATION COUNTER (PORTABLE)

Characteristics

1. Radiation detected: Gamma.
2. Ranges: Mininum 0.001 mr/hr to maximum 5 mr/hr, full scale.
3. Accuracy: Maximum error is ±5% of full scale.
4. Energy dependence: Energy dependent for all gamma energies, particularly for those below 0.1 Mev, and thus is used normally for detection only.
5. Time constant: Two or more time constants are provided.
6. Audible signal: Earphone jack.
7. High voltage: Fixed, 900 or 1200 v. Oscillator or vibrator supply.
8. Detector: Sodium iodide crystal, 1 × 1 to 2 × 2 in.
9. Photomultiplier: 5819 or 6655.
10. Dimensions (less separate probe): 10 to 12 in. long, 3 to 5 in. wide, 6 to 8 in. high.
11. Power: Batteries.
12. Weight: 6 to 12 lb.

Application

1. May be used for very low intensity x and gamma radiation.
2. Will not detect primary beta or alpha radiation.
3. Maximum sensitivity is obtained through forward end of instrument case.
4. The case and crystal housing will attenuate low-energy photons.

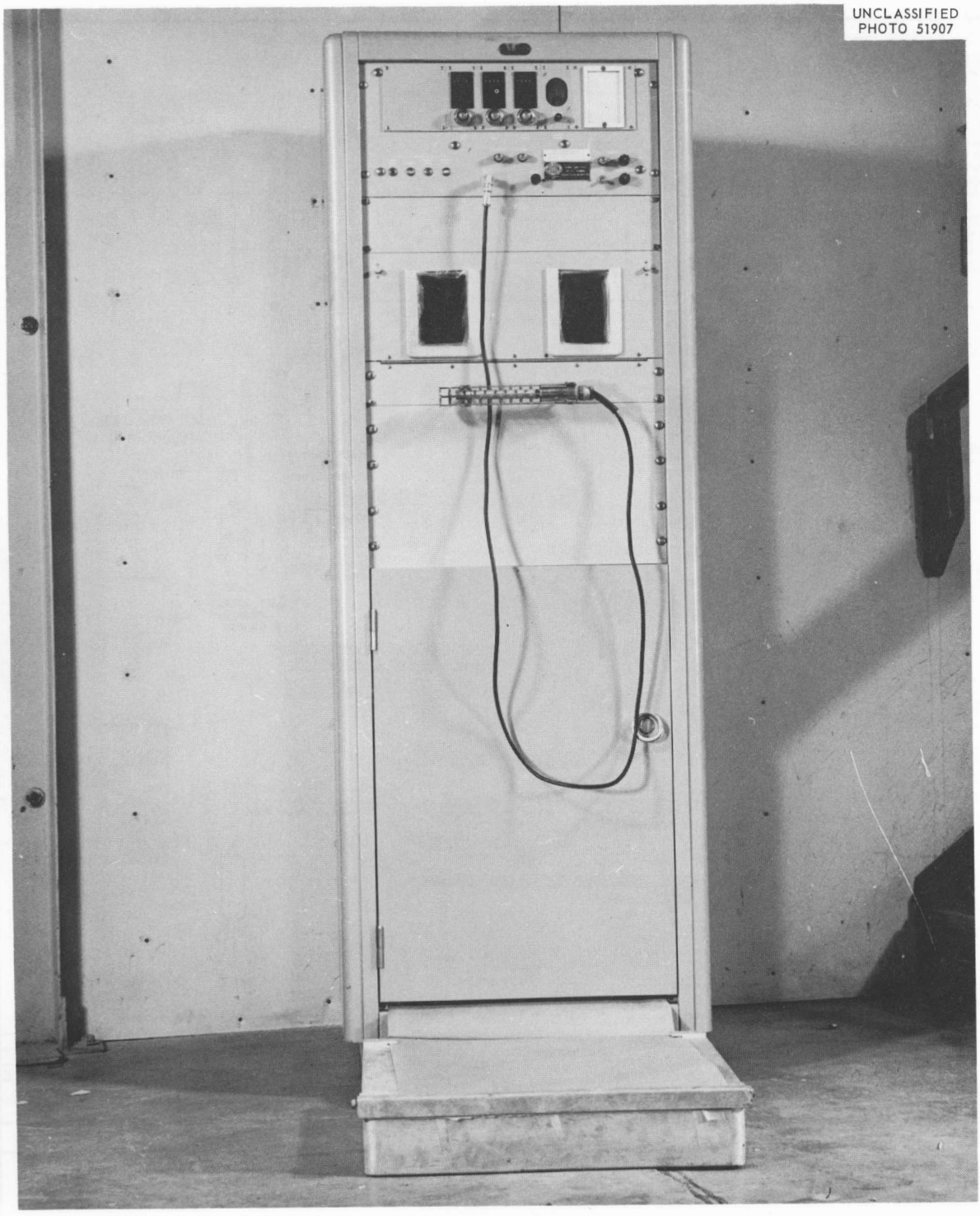

Hand and Foot Counter

This is a semiautomatic device for detecting beta-gamma contamination of shoes and hands, simultaneously. For most models, counts obtained by G-M tubes during an automatically timed interval are indicated by lights and registers. One model has a multichannel rate meter with adjustable relays for operating signals if preset counting rates are exceeded. Some models have an auxiliary probe for monitoring other areas of the body or clothing.

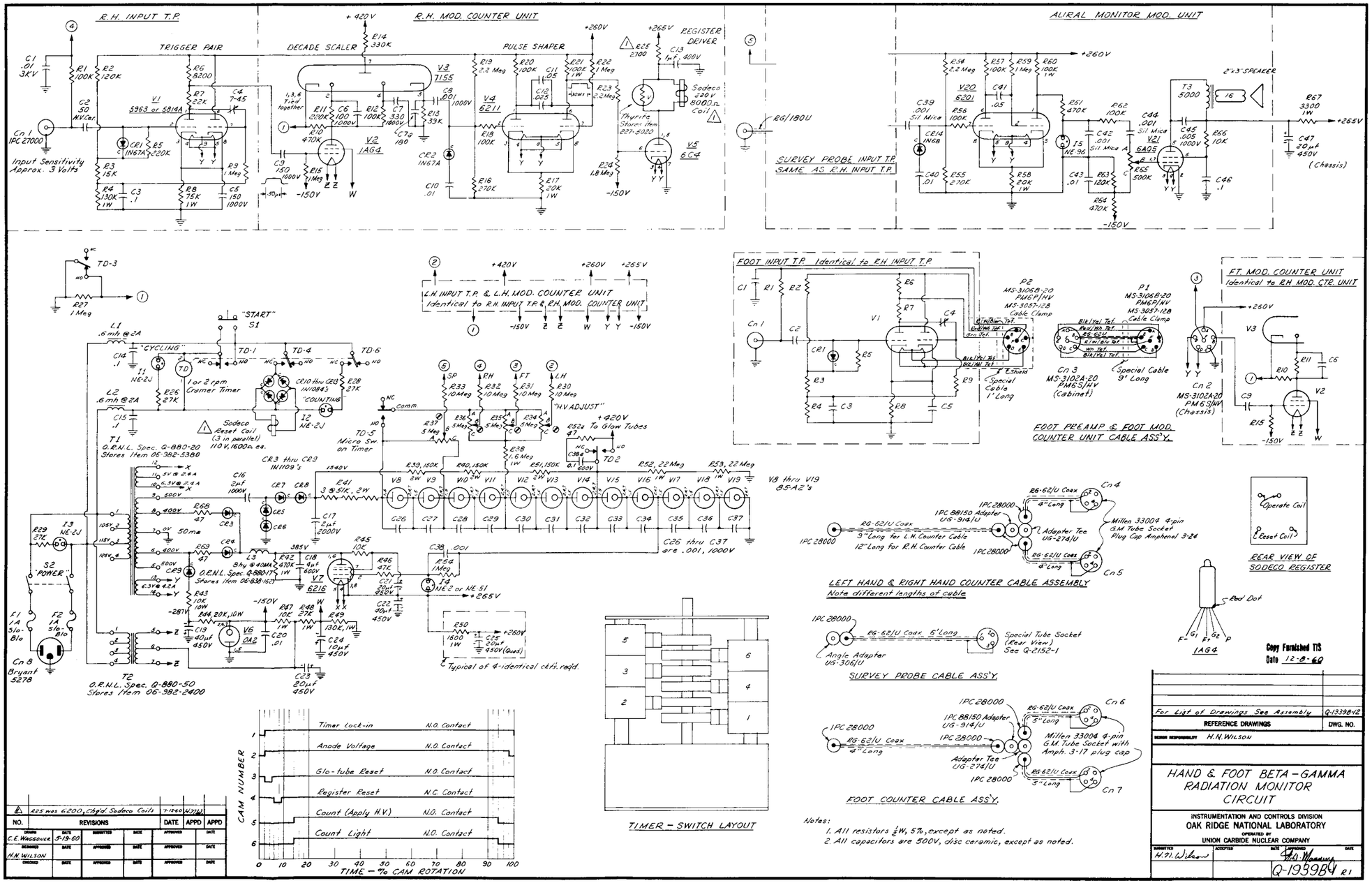

Circuit Diagram of Hand and Foot Counter

HAND AND FOOT COUNTER

Characteristics

1. Radiation detected: Beta and gamma.
2. Range: That determined by saturation of counters and counting equipment. *This is not a limitation,* because low levels of contamination are significant.
3. Counters: Halogen-quenched G-M. 1 to 4 may be provided for each hand and foot area.
4. Beta sensitivity: Minimum beta energy detected is 0.2 Mev.
5. Counting interval: Adjustable, usually 24 sec. Hand-pressure start; push-button reset.
6. High voltage: Adjustable, 600 to 1000 v.
7. Power: 110 v, 60 cycles.
8. Dimensions: 76 in. high, 32 in. wide, 24 in. deep.
9. Weight: 600 lb.

Application

1. Background should be noted and recorded on board daily.
2. Should be calibrated, and calibration count should be noted on the board daily.
3. To prevent contamination of paper bags, hands should be washed before countings.
4. Hands, with fingers extended, should be inserted as far as possible into the opening before counting.
5. Will not detect alpha contamination.
6. Hands and feet should not be moved from the time of start of count until count has been completed (24 sec).

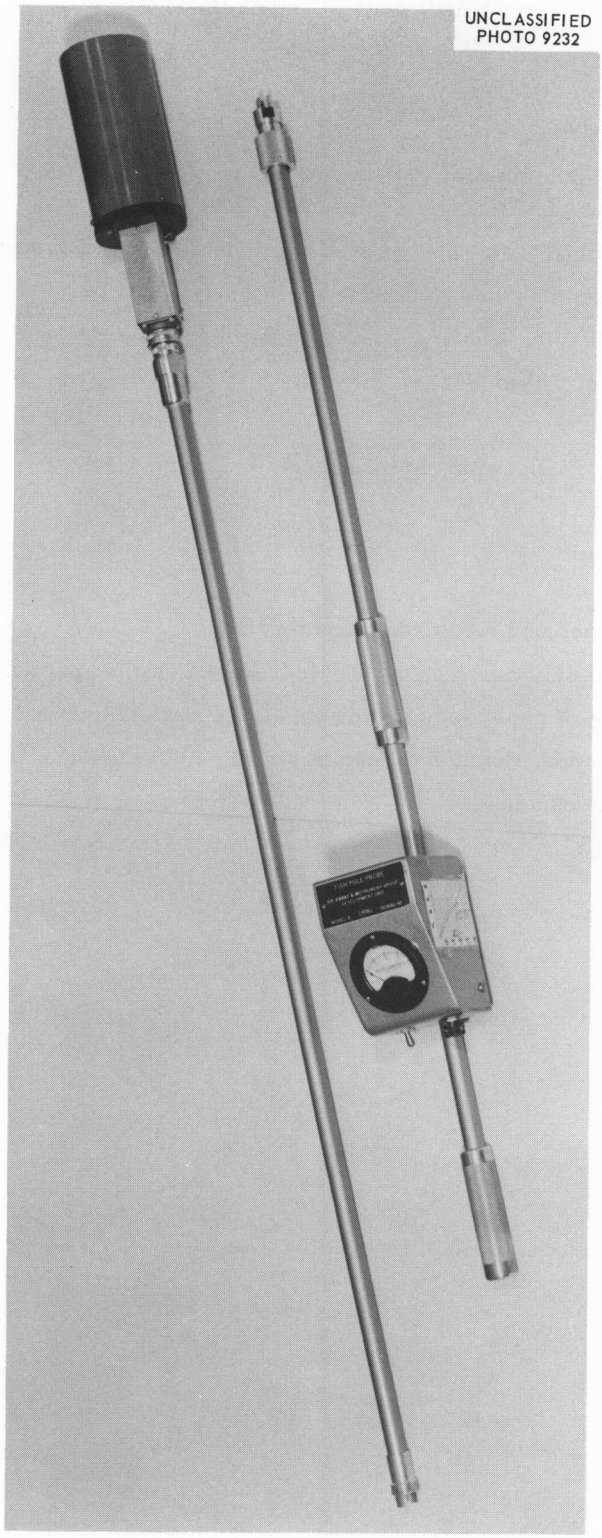

High-Range Survey Meter (Fish Pole Probe)

This probe is used for detection and measurement of high-level x and gamma radiation. The ion chamber is mounted 60 in. from the meter and handle.

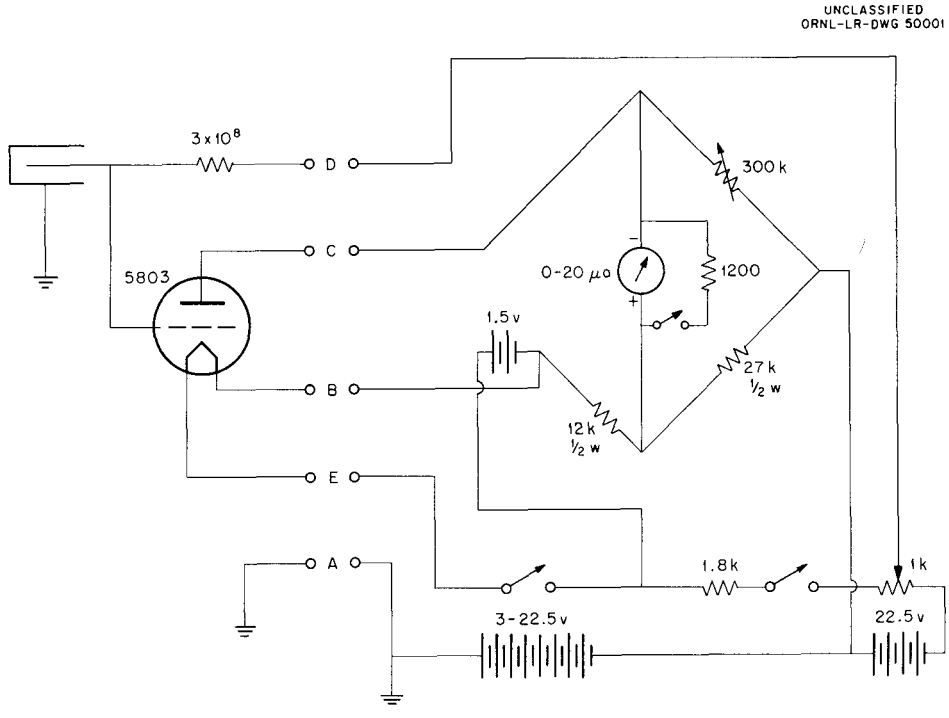

Circuit Diagram of Fish Pole Probe.

HIGH-RANGE SURVEY METER (FISH POLE PROBE)

Characteristics

1. Measures gamma intensities to 100 r/hr. Will indicate, depending upon sensitivity of instrument and construction of ion chamber, relative levels of gamma and beta radiation to several hundred rads per hour.
2. Affords protective distance to operator.
3. Ranges: "Lo" and "Hi." The "Hi" range has approximately one-half the sensitivity of the "Lo" range.
4. May be "zeroed" in field of radiation.
5. Power: Batteries.
6. Length: 7 ft.
7. Weight: 5 lb.

Application

1. Will measure within ±10% the gamma radiation in the range 1 to 100 r/hr.
2. Should be used only to compare relative intensities if the dose rate exceeds 100 r/hr.
3. The instrument is calibrated through 100 r/hr.
4. Should be turned on at least 2 min before use.
5. Check switch and meter functions before using.
6. The chamber should not be placed in contact with surfaces that may be contaminated.

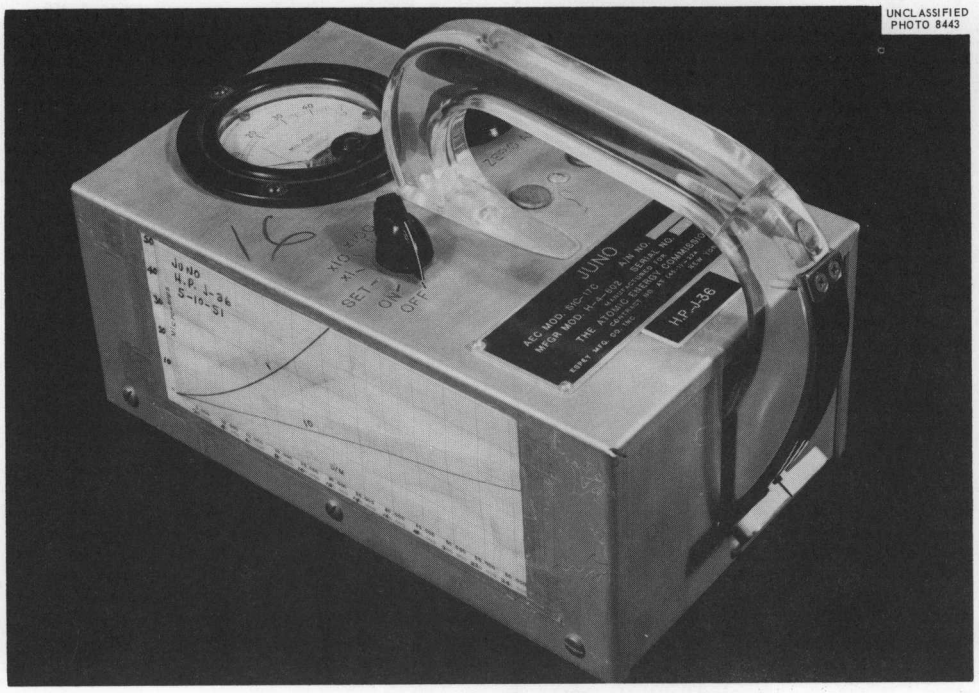

Juno (Alpha, Beta, Gamma Survey Meter)

This instrument utilizes an ionization chamber with a rate meter to measure the intensity of gamma radiation and alpha-particle emission and to indicate the relative intensity of beta-particle dose rates. Two manually positioned shields are incorporated to aid in determining types of radiation measured.

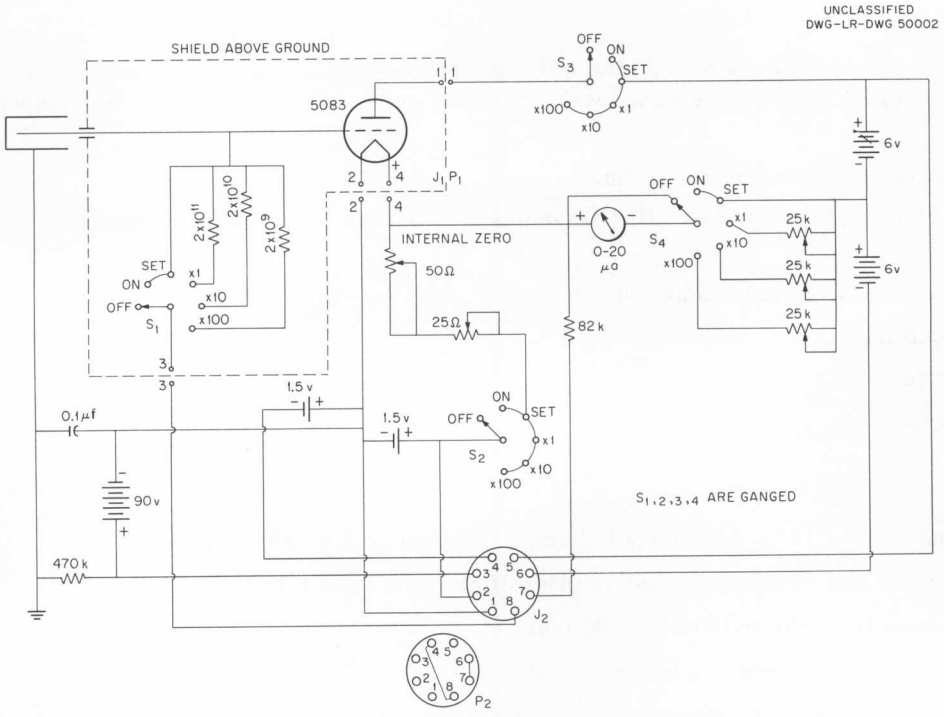

Circuit Diagram of Juno Survey Meter

JUNO (ALPHA, BETA, GAMMA SURVEY METER)

Characteristics

1. Radiation detected: Alpha, beta, and gamma.
2. Absorbers: Alpha, 1 mg/cm^2; beta, 50 mg/cm^2; gamma, $\frac{3}{32}$-in.-thick aluminum.
3. Ranges: Gamma (50, 500, and 50,000 mr/hr); alpha (approximately 10,000, 100,000, and 1,000,000 dis/min).
4. Zero: Zero may be adjusted in high-radiation fields.
5. Accuracy: Maximum error is ±10% of full scale.
6. Warmup time: 1 min.
7. Power: Batteries.
8. Dimensions: 10 in. long, 5 $\frac{1}{2}$ in. wide, 6 $\frac{1}{2}$ in. high.
9. Weight: 4 $\frac{1}{2}$ lb.

Application

1. With shields closed, the Juno will measure (within 10%) gamma radiation between the intensities of 5 mr/hr and 5 r/hr.
2. By using shields, differentiation between alpha, beta, and gamma radiation may be facilitated.
3. The instrument is calibrated for gamma radiation, for full-scale readings of 50 mr/hr on the X1 scale, 500 mr/hr on the X10 scale, and 5000 mr/hr on the X100 scale.
4. The instrument is calibrated for alpha radiation on the X1 and X10 scales through 250,000 dis/min.
5. Should be turned on 1 min before using.
6. Should be carefully zeroed.
7. For accurate gamma measurement, the instrument should be oriented with respect to the source as in the calibration procedure.

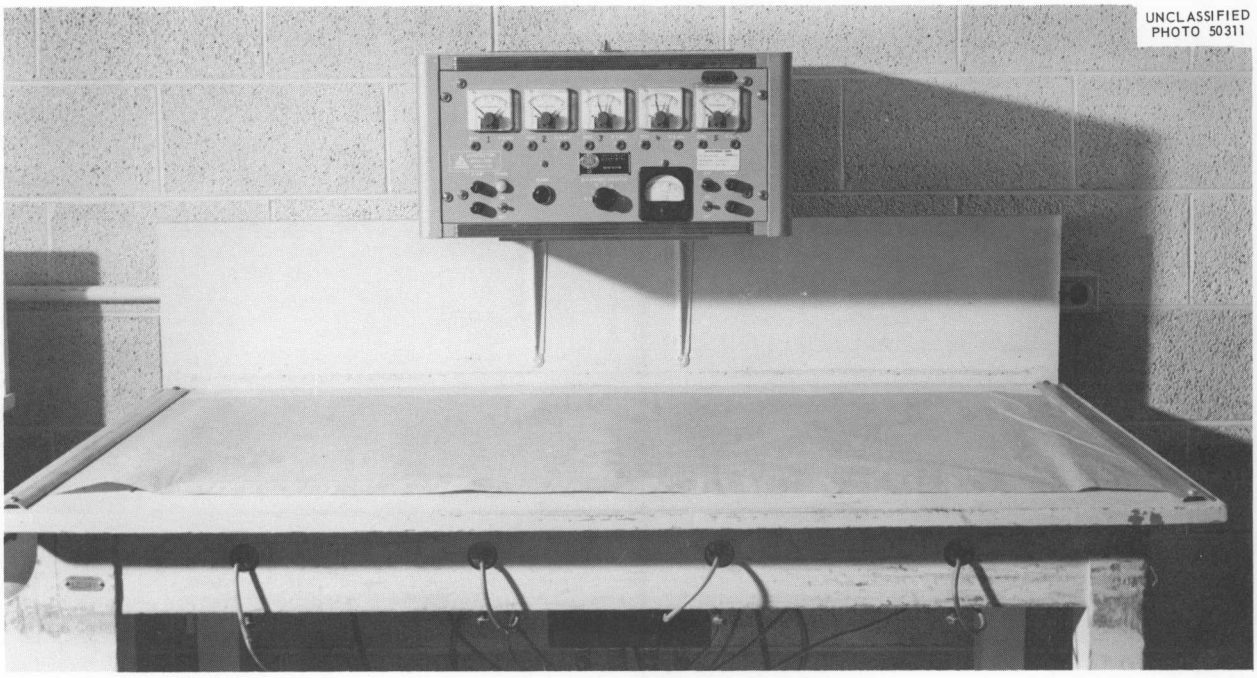

Laundry Monitor (Beta-Gamma)

This instrument is used for beta-gamma detection and consists of a modified Quintector with four G-M tubes feeding into each channel. The tubes are arranged over a lead-lined table and covered with a wire mesh screen on which clothing is placed for counting. See next photo for arrangement.

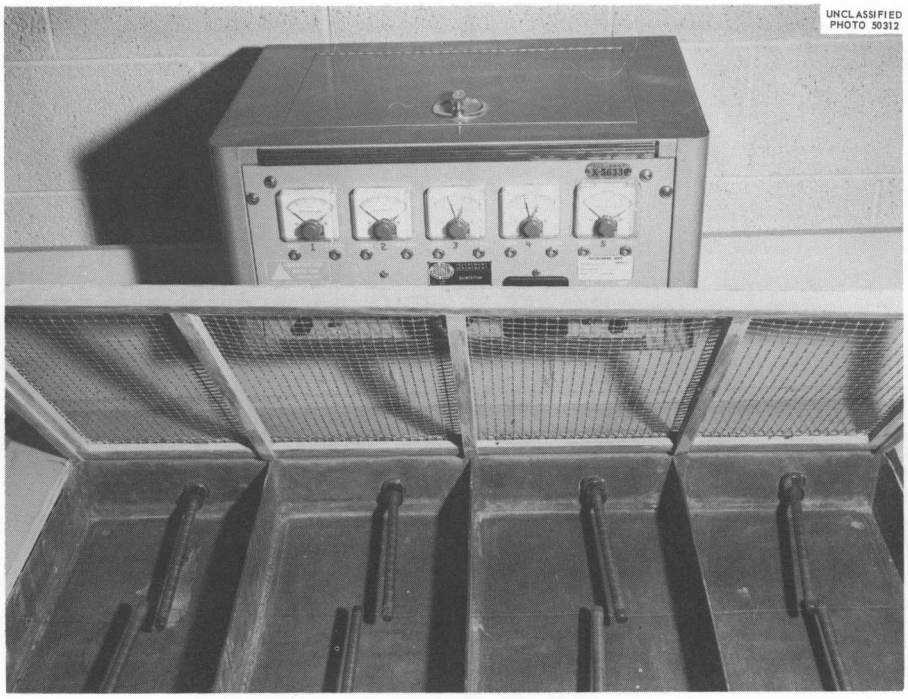

Tube Arrangement of the Laundry Monitor

LAUNDRY MONITOR (BETA-GAMMA)

Characteristics

1. Radiation detected: Beta and gamma.
2. Power required: 100 to 130 v ac.
3. Counters: Four G-M tubes feed into each of two rate meters.
4. Signal: Each rate meter has an adjustable alarm level.
5. High Voltage: High voltage to each G-M tube is individually adjustable.
6. Sensitive area: 20 × 20 in. table-top sensitive area opening over each set of four G-M tubes. Total sensitive area is 800 $in.^2$.
7. Shielding: G-M tube mounted in lead-lined cavity.
8. Dimensions: 6 × 3 × 3 ft.

Application

1. Will detect beta-gamma contamination on clothing when the radioactivity is above an average of about 0.1 mrad/hr per 100 $in.^2$.
2. Will not detect alpha contamination.
3. All tubes should be checked for proper operation before use.
4. Clothing should be arranged so that as much surface as possible is exposed to the tubes.
5. Clothing should not be moved during the counting interval.
6. Background check should be made before initial operation and after each movement of clothing in the immediate area.

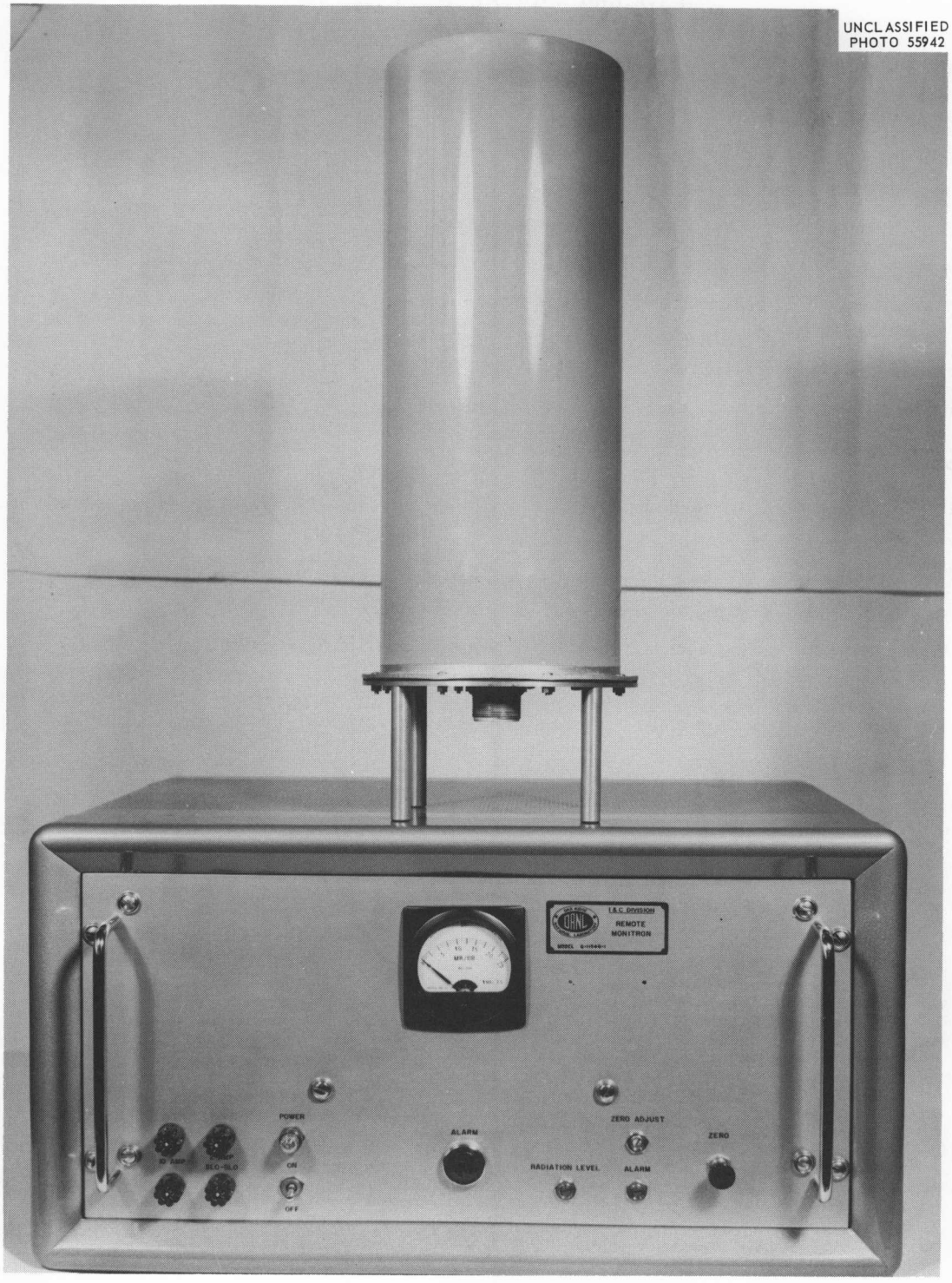

Monitron

The monitron employs a large ionization chamber which is coated on the inside with enriched boron. It is used for the detection of gamma and thermal-neutron radiation. The ionization chamber is connected with an amplifier circuit and a count rate meter which reads directly in milliroentgens per hour. A relay circuit, actuating an alarm, may be set to go off at any predetermined gamma-radiation level.

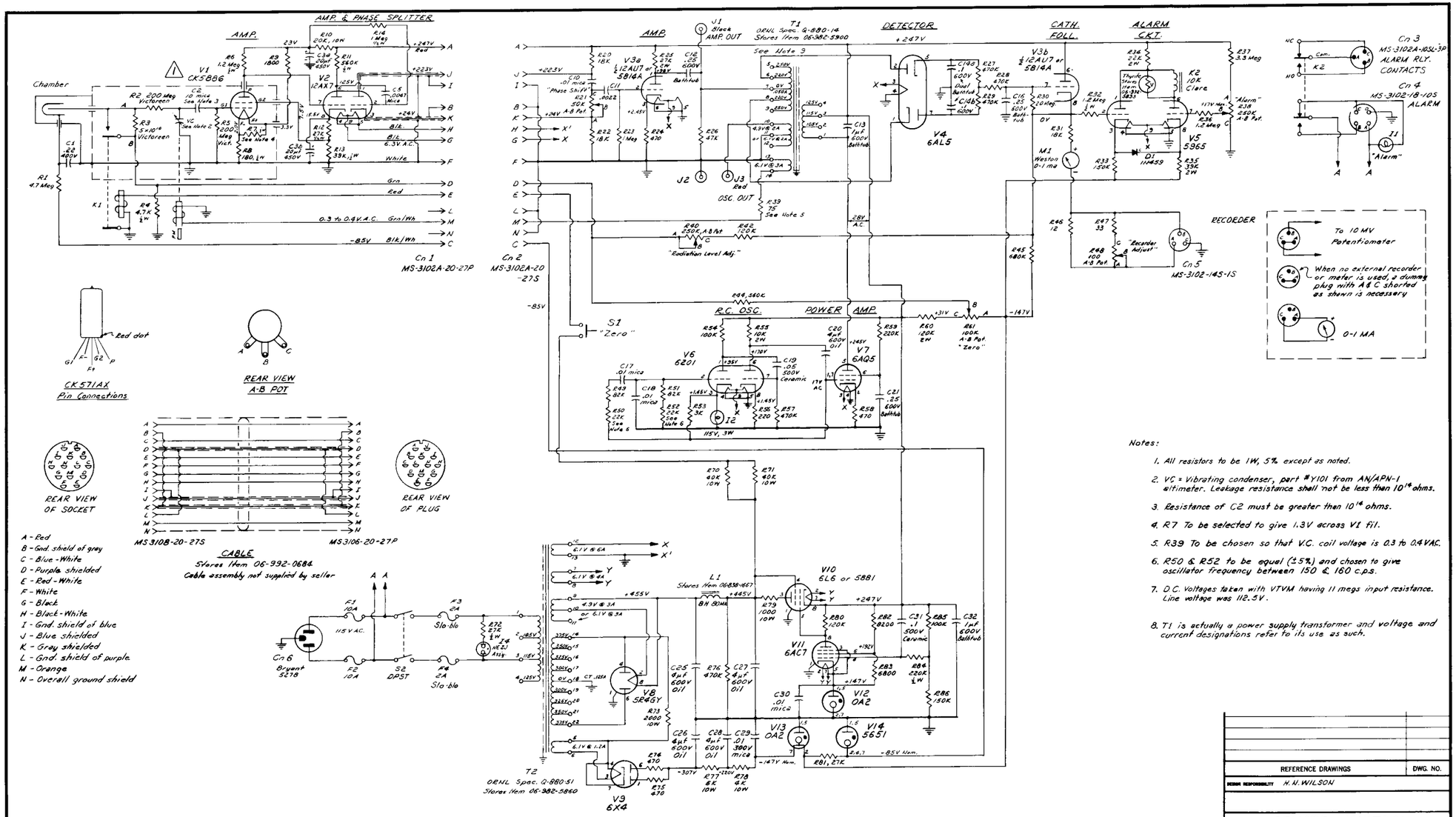

NO.	REVISIONS	DATE	APPD	APPD
1	V1 WAS CK571AX	2463	H.N.W.	

DRAWN	DATE	SUBMITTED	DATE	APPROVED	DATE
C.E. McGONIGLE	8-9-61				
DESIGNED	DATE	APPROVED	DATE	APPROVED	DATE
H.N. Wilson					
CHECKED	DATE	APPROVED	DATE	APPROVED	DATE

REFERENCE DRAWINGS — DWG. NO.

DESIGN RESPONSIBILITY H. N. WILSON

REMOTE MONITRON CIRCUIT

INSTRUMENTATION AND CONTROLS DIVISION
OAK RIDGE NATIONAL LABORATORY
OPERATED BY
UNION CARBIDE NUCLEAR COMPANY

SUBMITTED	ACCEPTED	DATE	APPROVED	DATE
H.N. Wilson			E.D. Harmon	

Q-1154B-1 R1 0

Circuit Diagram of Monitron

MONITRON

Characteristics

1. Radiation detected: Chamber may be coated with carbon for gamma detection only, or with boron for gamma and neutron detection.
2. Range: Full-scale reading of 25 and 125 mr/hr on 3-in. meter.
3. Components: Consists of control chassis and a 4000 cm^3 ion chamber which can be located 150 ft or more from the control unit.
4. Alarms: Adjustable rate alarm indicator and an external connection for additional alarms.
5. Power required: 110 v, 60 cycle operation; no batteries.
6. Reliable condenser modulator with phase-sensitive demodulator.
7. Recorder: External connection for strip-chart recorder.
8. Dimensions: Control chassis $21 \times 10\frac{1}{2} \times 14$ in.); chamber (20 in. high, $6\frac{1}{2}$ in. in diameter).
9. Weight: 70 lb.

Application

1. Useful for monitoring background levels of gamma and thermal-neutron radiation.
2. Will indicate gamma radiation levels in terms of milliroentgens per hour.
3. Does not measure thermal-neutron intensities but will indicate relative levels.
4. Should be checked daily for zero setting.
5. Should operate only on high-sensitivity setting. Persons concerned should be notified if instrument is set on low-sensitivity setting.
6. For monitoring radiation levels for Health Physics purposes, the alarm setting, where background permits, should be such that the alarm will respond at 2.5 mr/hr (20 mr per 8-hr day; 5 r per 250-day working year).
7. Instruments are calibrated with a radium source in terms of milliroentgens per hour.

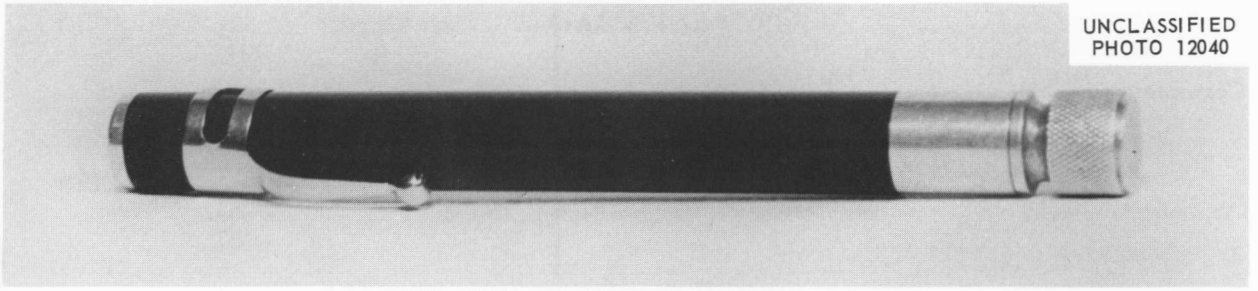

Pocket Ionization Chamber

The pocket ionization chamber is an indirect-reading gamma dosimeter for the measurement of low-level personnel exposures in the 5- to 200-mrem range. The principal components are a cylindrical outer wall, a central-rod electrode, insulators, and a protective cap. The chamber is used in conjunction with a charger-reader (Minometer) for dose measurement.

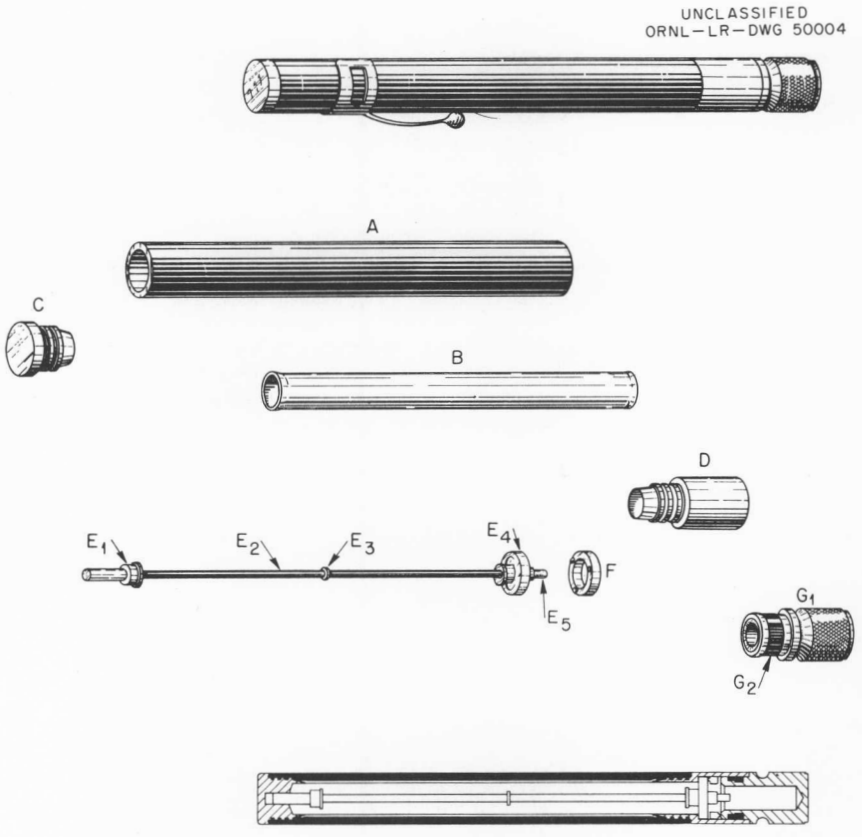

VICTOREEN POCKET METER, MODEL 352

A. LOW ATOMIC NUMBER WALL
B. GRAPHITE-COATED PAPER SHELL
C. ALUMINUM TERMINAL HEAD
D. ALUMINUM TERMINAL SLEEVE
E_1 POLYSTYRENE SUPPORT BUSHING
E_2 CENTRAL ELECTRODE, GRAPHITE COATED
E_3 POLYETHYLENE INSULATING WASHER
E_4 POLYSTYRENE FIXED BUSHING
E_5 ELECTRODE CONTACT
F. RETAINING RING
G_1 ALUMINUM BASE CAP
G_2 POLYETHYLENE FRICTION BUSHING

Victoreen Pocket Meter, Model 352

POCKET IONIZATION CHAMBER

Characteristics

1. Radiation detected: Gamma (also thermal neutrons if chamber is coated with boron).
2. Ranges: 200 mr. Other ranges (0–1, 0–5, 0–10 roentgens, etc.) are available.
3. Accuracy: Within ±10% of full scale.
4. Energy response: Between 0.1 and 3 Mev. The readings will be correct to within ±5% of minometer meter reading.
5. Indicating device: Associated charger-reader.
6. Power: Same as that for the associated charger-reader.
7. Dimensions: ½ in. in diameter, 5½ in. long.
8. Weight: ½ oz.

Application

1. Will measure x or gamma-radiation exposures between 0 and 200 mr/hr. (See 2 above).
2. Is insensitive to beta radiation below 1 Mev.
3. Will not differentiate between beta radiation above 1 Mev and gamma or x radiation.
4. For accurate comparison of film-badge-meter readings, the pocket meters should be worn near the film-badge meter.
5. Orientation of the meter with respect to the source may greatly affect the results.
6. The knowledge of Minometer techniques is necessary to properly interpret pocket-meter results.
7. These meters are calibrated with a radium source, and those which deviate more than ±10% are rejected.

Precipitron

This is a device for sampling air by the electrostatic precipitation of radioactive particles onto a thin aluminum foil. The principal components of the instrument are a collection head, a small blower unit (to draw air through the filter), and a high-voltage power supply.

PRECIPITRON

Characteristics

1. Sampling application: Collects particles which are subsequently counted for alpha, beta, and gamma.
2. Collection efficiency: >90% for particles between 0.1 and 10 μ.
3. Sampling time: Zero to 60-min timer incorporated.
4. Power: Operates on 100 to 120 v ac.
5. Operating voltage: Adjustable high-voltage supply.
6. Sampling rate: Blower unit draws 3 ft^3 of air per minute through collector.
7. Dimensions: $12 \times 8 \times 24$ in.
8. Weight: 25 lb.

Application

1. May be used wherever 110-v ac power is available.
2. Extreme caution should be exercised in operating this instrument, because 10,000 to 20,000 v are available from the high-voltage supply.
3. Shut off power before inserting or removing collector.
4. When inserting collector, adjust so that electrode wire is centrally located.
5. Collection time is governed by attached timer if in "Auto" position.
6. Adjust high voltage to a point just below arc discharge.
7. Air flow rate should be checked routinely.
8. Recommended for collection of particles which emit alpha radiation.

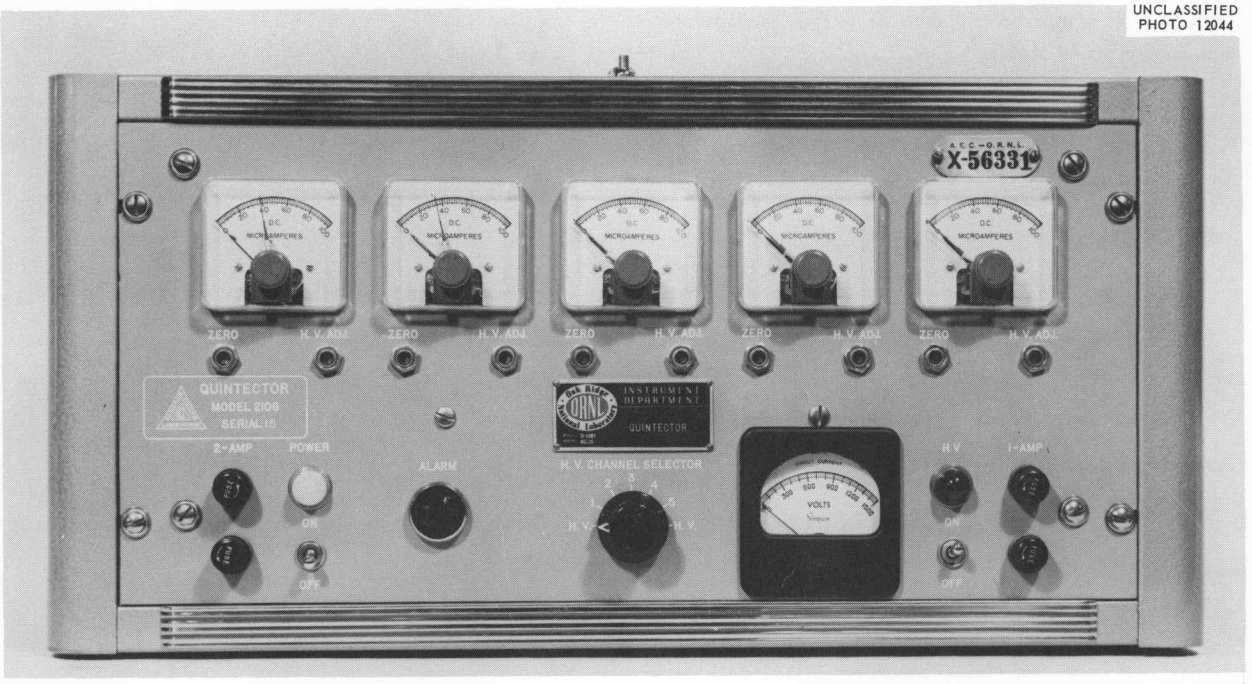

Quintector

This is a five-channel rate meter with integral high-voltage supply for operation of five G-M counters. Separate ammeters and adjustable alarms are provided for each channel. This instrument was designed for monitoring beta-gamma radiation at doorways.

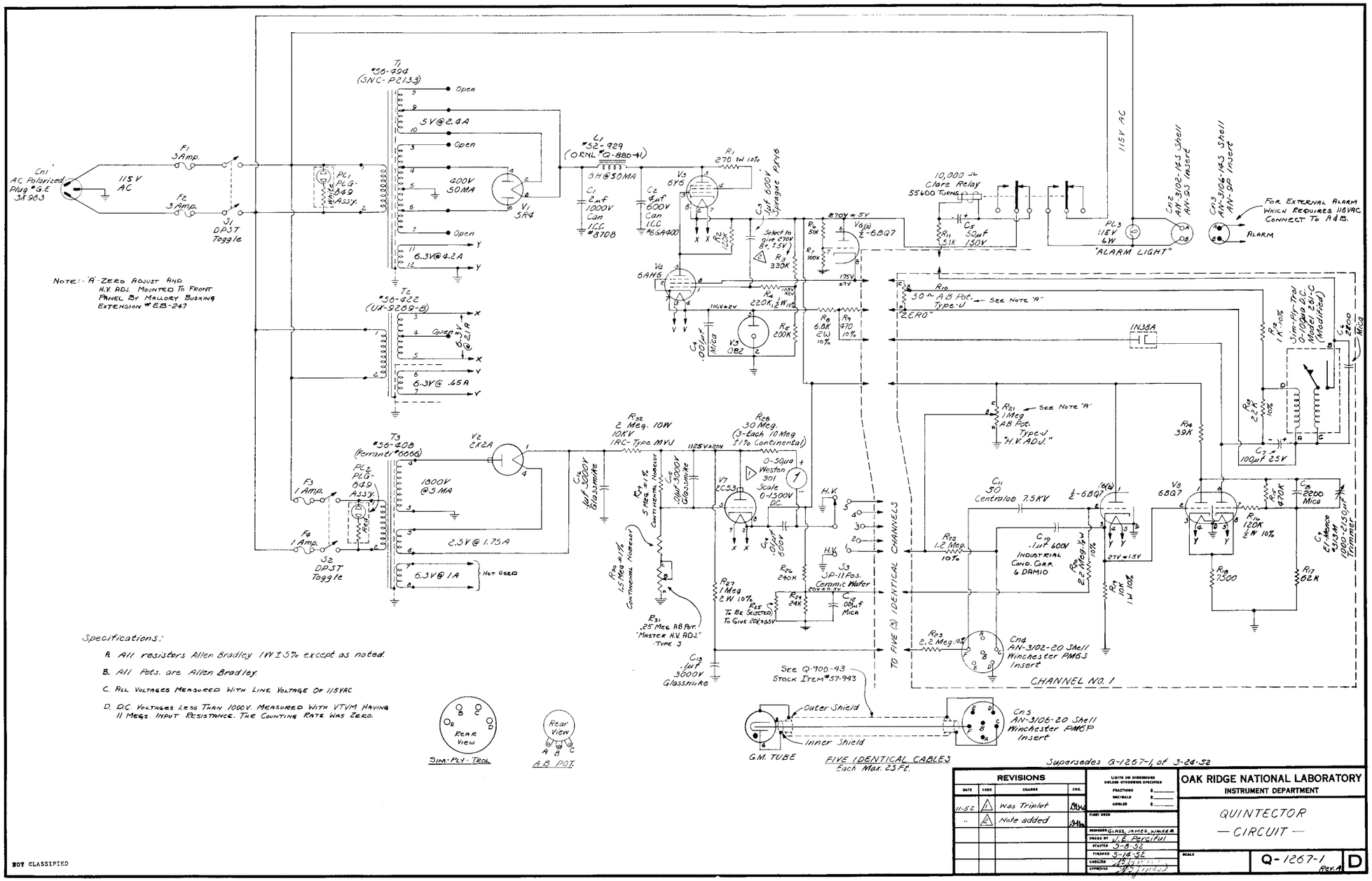

Circuit Diagram of Quintector

QUINTECTOR

Characteristics

1. Radiation detected: Beta and gamma.
2. Range: 0 to 2000 counts/min.
3. Accuracy: Maximum error is within ±5% of full scale.
4. Alarm setting: Adjustable for each channel. Operates light on panel and power to 110-v outlet for external alarm.
5. Input sensitivity: Adequate for G-M counter.
6. High voltage: 800 to 1150 v. Adjustable separately for each counter.
7. Power: 110 v, 60 cycles.
8. Dimensions: 20 ½ in. wide, 15 in. deep, 11 ½ in. high.
9. Weight: 60 lb.

Application

1. Alarm contact on meter relay should be set sufficiently above background (about two times higher) to reduce the number of spurious alarms.
2. A beta-gamma source should be used to check each tube to determine whether it is operating properly.
3. Will not detect alpha radiation.
4. For indicating relative beta-gamma radiation intensity above background level.

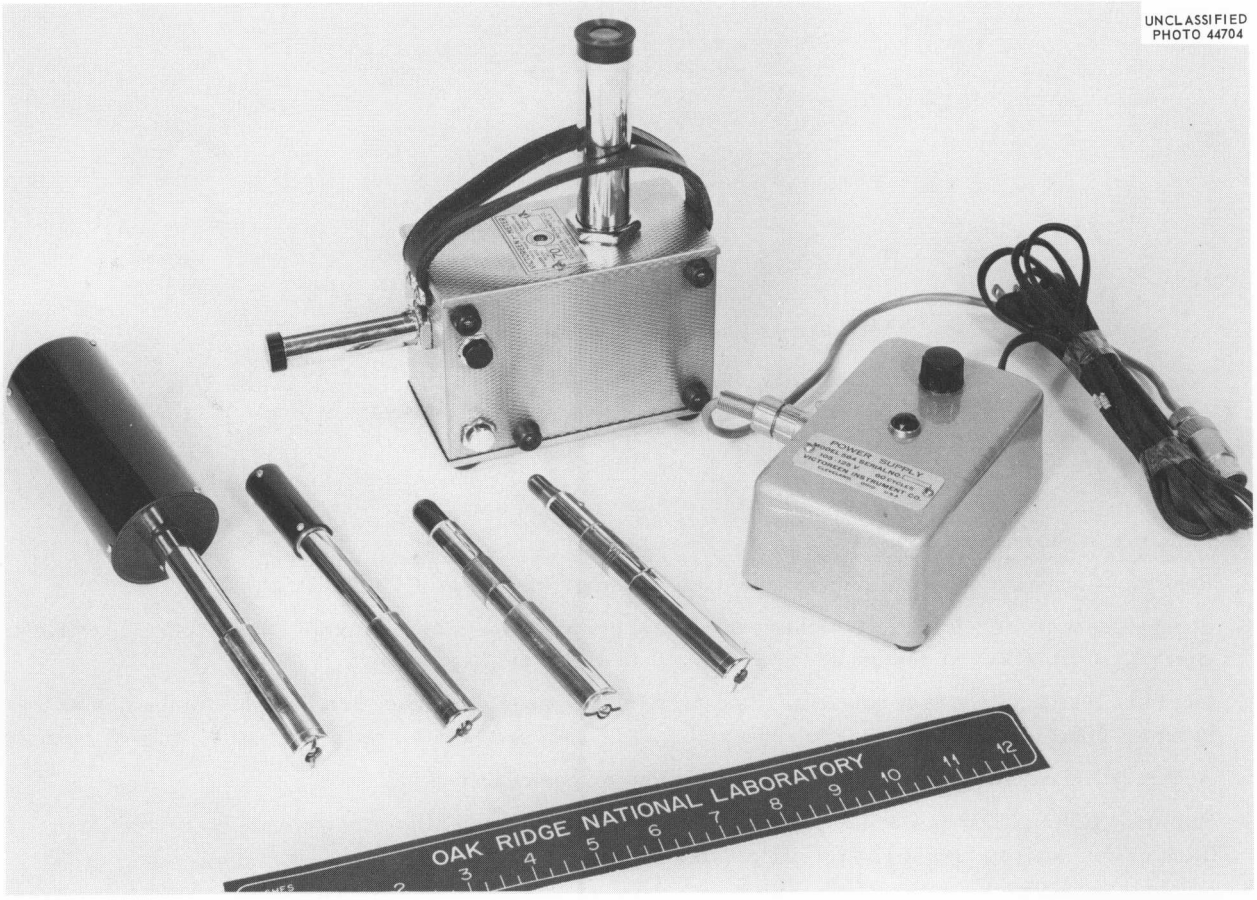

R-Meter (Condenser)

This meter is used for measuring roentgen doses of x and gamma radiation. Components include a charger-reader and an exchangeable condenser ion chamber. It is used for air-dose measurements as secondary to the standard air chamber.

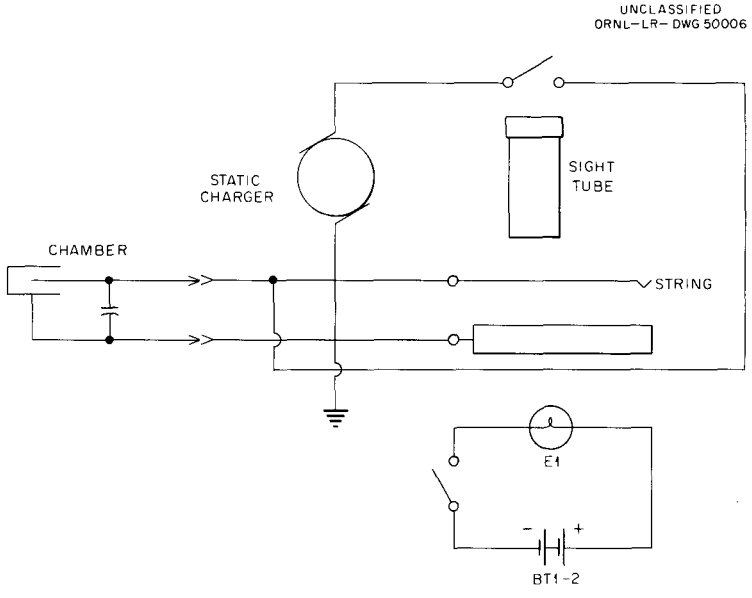

Circuit Diagram of Condenser R-Meter

R-METER (CONDENSER)

Characteristics

1. Radiation measured: x and gamma.
2. Ranges: Chambers are available for full-scale readings of 0.25 to 2500 r.
3. Energy dependence: Function of chamber. Chambers are available for energy ranges 6 to 35 kev (low energy), 30 to 400 kev (medium energy), and 400 to 1300 kev (high energy).
4. Intensity limits: Vary with chamber. Examples for medium-energy chamber: the 10-r probe has an intensity limit of 1.7 r/sec; for the 100-r probe, it is 25 r/sec; and for the 250-r probe, it is 40 r/sec.
5. Accuracy: Maximum error is 2 and 10%, depending on the chamber.
6. Power: With auxiliary power supply (110 v, 60 cycles), without auxiliary power supply (battery for illumination lamp and twist-knob friction charger).
7. Dimensions: 8 in. long, 3 in. wide, 8 ½ in. high.
8. Weight: 10 lb, without power supply.

Application

1. Most practical instrument for rapid determination of x-ray dose in roentgens.
2. The detachable chamber tube which this instrument features is valuable for measuring directly in small cavities or phantoms.
3. The ionization chamber tube is nonionizable and, therefore, is not affected by radiation.
4. The ionization chamber is made of Bakelite, and since the walls are rather thin, care must be taken that the chamber is not broken.
5. The ionization chambers may be considered as "air-wall" chambers, inasmuch as their atomic number closely approximates that of air.
6. All readings taken on the instrument must be started from the zero division of the scale.

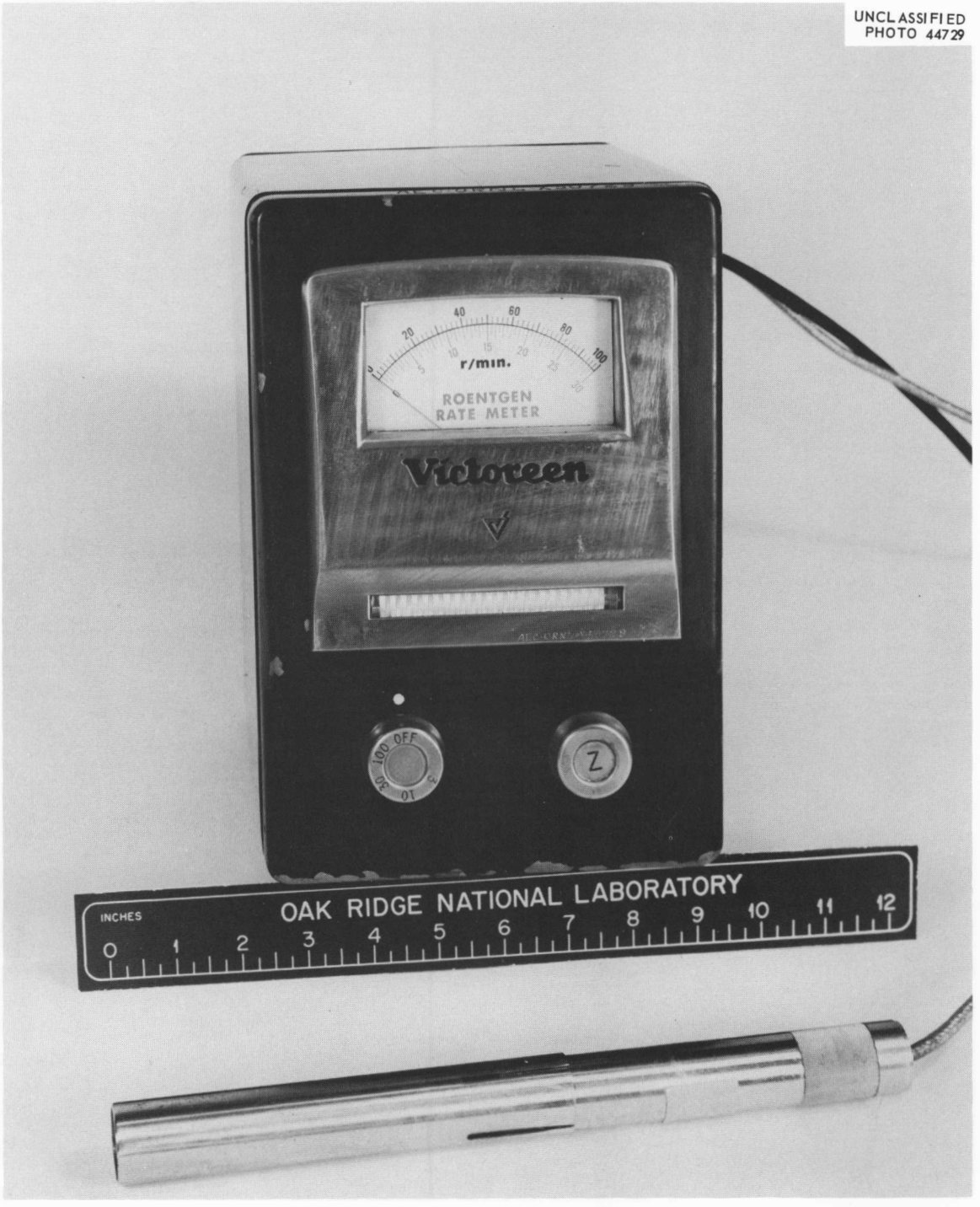

Roentgen Rate Meter (Victoreen Model 510)

The roentgen rate meter is an accurate, high-range instrument for obtaining direct readings of the dose rates from x and gamma radiation. It consists of a control unit, including meter, cable, and probes. Probes are available in a wide variety of dose-rate and energy ranges.

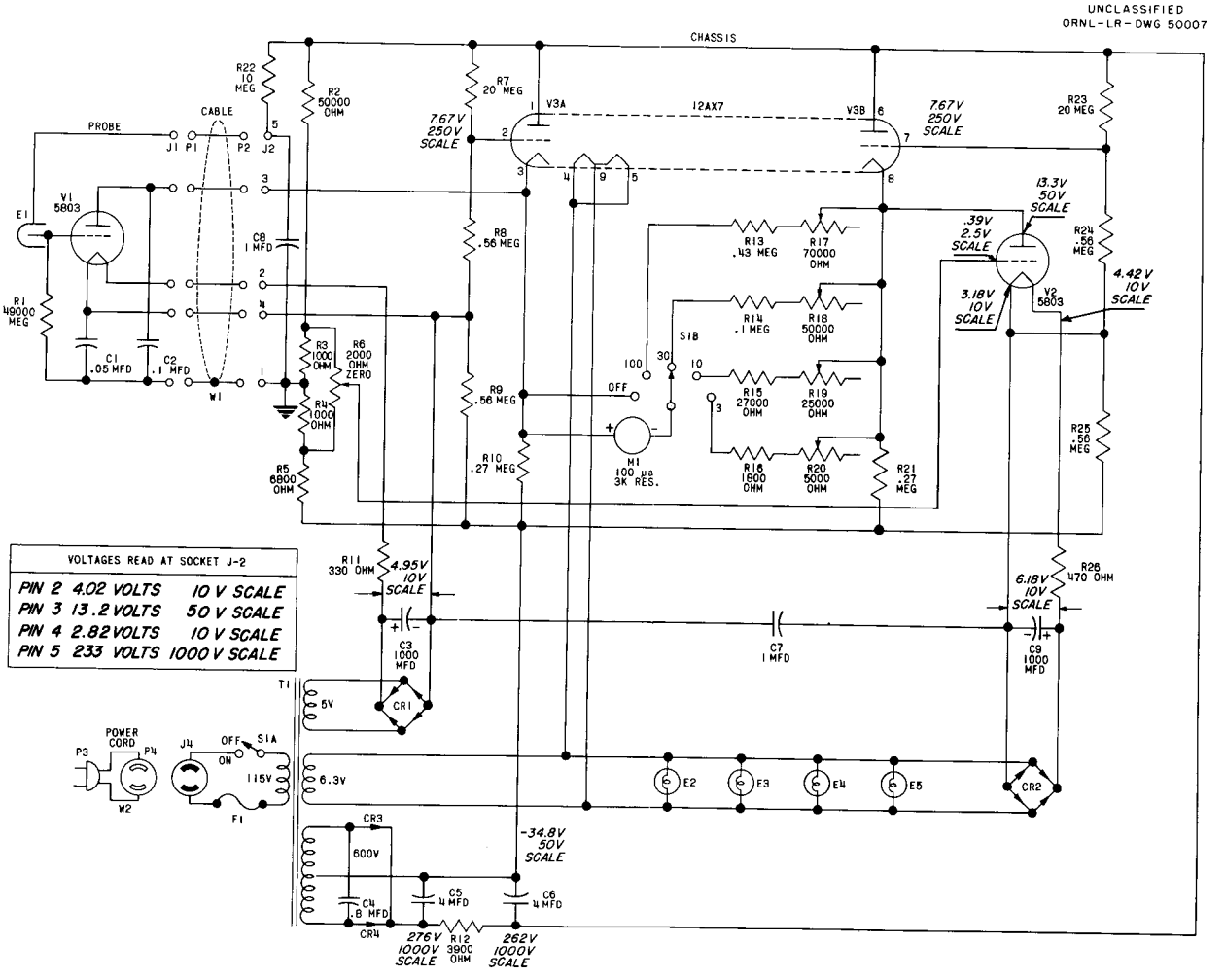

VOLTAGES ARE MEASURED FROM GROUND WITH A 20,000 OHMS PER VOLT VOLTMETER, EXCEPT AS INDICATED. THESE MEASUREMENTS ARE AVERAGE READINGS AND MUST BE INTERPRETED WITH DISCRETION.

Circuit Diagram of Roentgen Rate Meter

ROENTGEN RATE METER (VICTOREEN MODEL 510)

Characteristics

1. Radiation measured: x and gamma.
2. Ranges: Vary with probe. Four rate-meter ranges for each probe. Typical range is 3, 10, 30, and 100 r/min.
3. Accuracy: Maximum error is ±5 to ±15%, depending upon probe type.
4. Warmup time: 30 min for minimum drift.
5. Power: 110 v, 60 cycles, 30 w.
6. Dimensions: 8 in. long, 7 in. wide, 10 in. high.
7. Weight: 20 lb.

Application

1. This is an accurate instrument for the continuous monitoring of the intensity of an x-ray beam in roentgens per minute.
2. The probe is a compact unit with an air-equivalent ionization chamber wall.
3. The most accurate zeroing is obtained on the most sensitive range.
4. Calibration is performed by the manufacturer at 22°C and 760 mm Hg. When conditions of temperature and pressure differ appreciably (±5°C or ±20 mm Hg) from these conditions, correction factors (see *Instruction Manual for Roentgen Rate Meter*) must be applied.

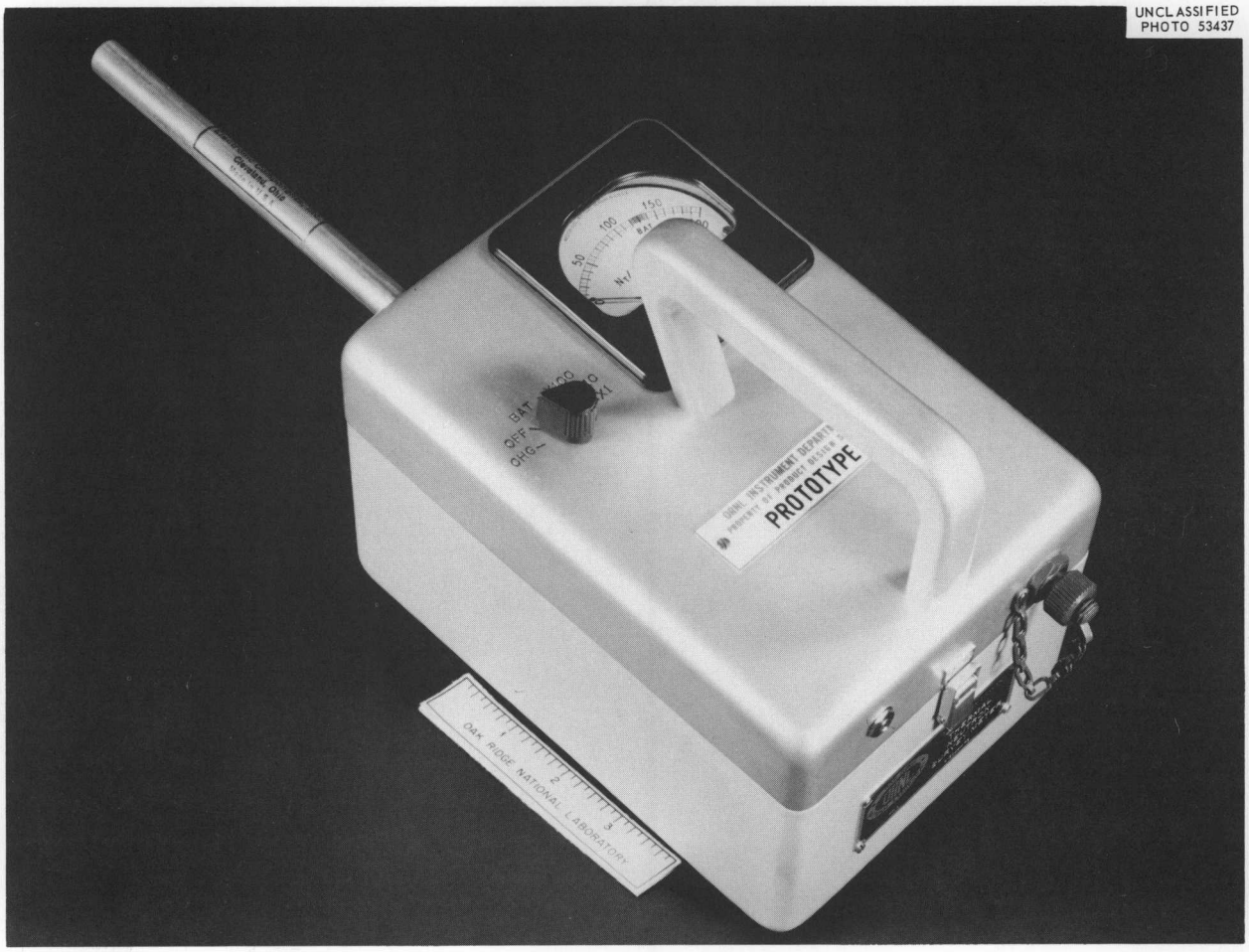

Thermal-Neutron Counter (Portable)

The portable thermal-neutron counter is a lightweight instrument for measuring thermal-neutron flux rates. All circuitry is transistorized, and power is provided by rechargeable nickel-cadmium cells. The detector is relatively insensitive to gamma radiation.

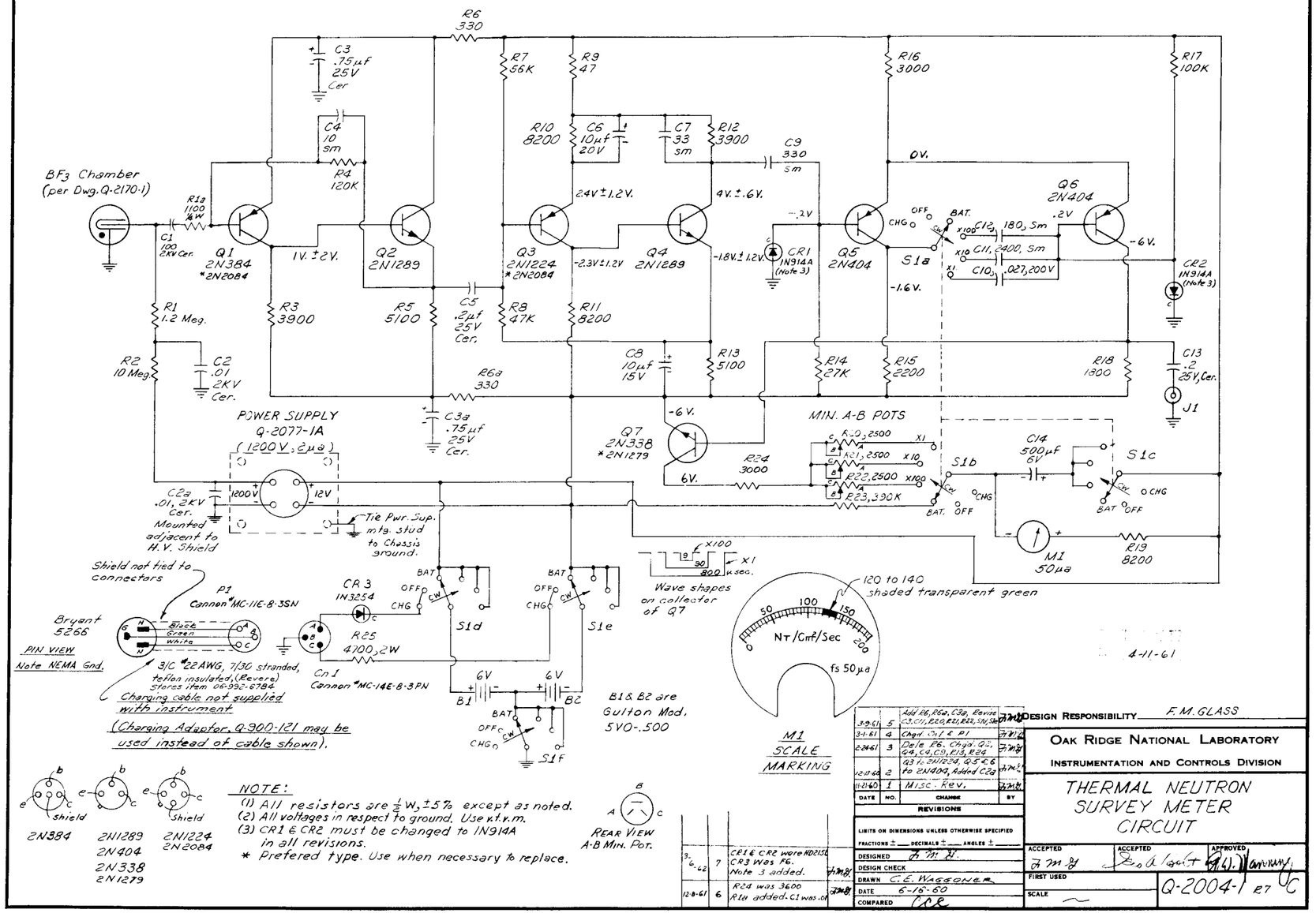

Circuit Diagram of Portable Thermal-Neutron Counter

THERMAL-NEUTRON COUNTER (PORTABLE)

Characteristics

1. Radiation detected: Thermal neutrons. Relatively insensitive to gamma radiation.
2. Ranges: 1,000, 5,000, and 20,000 counts/min.
3. Detector: PF_3, low-pressure-filled counter.
4. Indicating devices: Rate meter and earphone.
5. Warmup time: 30 sec.
6. Power: Nickel-cadmium cells, with built-in trickle charger. Rechargeable from 110-v, 60-cycle line.
7. Dimensions: Main compartment, $8 \times 5\frac{1}{2} \times 5$ in.; counter, $6 \times \frac{1}{2}$ in.
8. Weight: About 4 lb.

Application

1. Instrument responds only to thermal neutrons.
2. Measures flux values less than 50 neutrons cm^{-2} sec^{-1}.
3. Instrument is calibrated with a polonium-beryllium source.

Part 2

Sources, Procedures, and Calibration Devices

2.1 GAMMA SOURCES

2.1.1 Radium

1. Radium, in equilibrium with its decay products, is used as a standard in the gamma calibration of survey and monitoring instruments.

2. The half-life of radium is approximately 1600 yr, so that a source may be used for several years after standardization without the necessity for correction of the dosage rate due to radioactive decay.

3. The unit most commonly used in expressing the strengths of radium sources is the curie. The curie was originally defined as that quantity of radon in radioactive equilibrium with 1 g of radium. This definition has been extended such that a curie of any radioactive material is that quantity which has a disintegration rate of 3.700×10^{10} dis/sec, since this is the presently accepted value of the disintegration rate of 1 g of radium.

4. The gamma radiation from a radium source is almost entirely from its equilibrium products, Ra *B* and Ra *C*. The approximate gamma-ray spectrum of radium and its equilibrium decay products is shown in Table 2.1. The effective average energy of the radiation is approximately 0.7 Mev.

5. The principal decay scheme of radium is as follows:

$$\mathrm{Ra}^{226}(1590\ \mathrm{yr}) \xrightarrow{\alpha} \underset{(\mathrm{Ra}\ A)}{\mathrm{Rn}^{222}(3.825\ \mathrm{days})} \xrightarrow{\alpha} \mathrm{Po}^{218}(3.05\ \mathrm{min}) \xrightarrow{\alpha}$$

$$\underset{(\mathrm{Ra}\ B)}{\mathrm{Pb}^{214}(26.8\ \mathrm{min})} \xrightarrow{\beta} \underset{(\mathrm{Ra}\ C)}{\mathrm{Bi}^{214}(19.7\ \mathrm{min})} \xrightarrow{\beta} \underset{(\mathrm{Ra}\ C')}{\mathrm{Po}^{214}(1.5 \times 10^{-4}\ \mathrm{sec})} \xrightarrow{\alpha}$$

$$\underset{(\mathrm{Ra}\ D)}{\mathrm{Pb}^{210}(22\ \mathrm{yr})} \xrightarrow{\beta} \underset{(\mathrm{Ra}\ E)}{\mathrm{Bi}^{210}(5\ \mathrm{days})} \xrightarrow{\beta} \underset{(\mathrm{Ra}\ F)}{\mathrm{Po}^{210}(140\ \mathrm{days})} \xrightarrow{\alpha} \underset{(\mathrm{Ra}\ G)}{\mathrm{Pb}^{206}(\mathrm{stable})}.$$

It may be noted from the transitions giving gamma radiation that the daughters, Ra *C* and Ra *C'*, reach equilibrium as the radon reaches equilibrium, since their half-lives are appreciably less than that of radon. The transitions beyond Ra *D* are of negligible importance in the production of gamma rays.

6. Due to the heterogeneity of the gamma-ray energies obtained from radium, in attenuation and/or shielding calculations involving radium, each gamma ray must be treated separately or the attenuation must be experimentally determined. For example, if a given thickness of some material reduces the dosage rate from a radium source to one-half the original value, addition of a second layer of the same material of the same thickness will not again reduce the dosage rate by one-half. With each addition of absorber the effective energy of the transmitted radiation is increased, thereby increasing the thickness required for an additional "half-value layer."

7. Radium sources are, most commonly, radium salt solutions in glass ampules or, solid radium salts (usually RaBr) sealed in small, hollow needles or cylinders of platinum, Monel, brass, or glass.

8. These sources may be calibrated by the National Bureau of Standards in the United States or by the Canadian National Research Laboratories. A sample certification of a calibration is shown as Fig. 2.1.

Table 2.1. Approximate Gamma-Ray Spectrum of Radium and Its Equilibrium Decay Products

Transition	Quanta per Radium Disintegration	Energy per Photon (Mev)
Ra Rn	0.012	0.184
Ra *B* Ra *C*	0.115	0.241
	0.258	0.294
	0.450	0.350
Ra *C* Ra *C′*	0.658	0.607
	0.065	0.766
	0.067	0.933
	0.206	1.120
	0.063	1.238
	0.064	1.379
	0.258	1.761
	0.074	2.198
Total	2.3	

9. Amounts of radium are determined by comparing the gamma radiation of the unknown sample with that of a carefully weighed standard; conditions of filtration, the instrumentation, and the geometry must not vary from sample to sample.

10. The equivalent value in milligrams of radium, given in Fig. 2.1, is that amount of radium which, if contained in a tube of Thuringian (soft) glass 0.27 mm thick, would give a gamma radiation equivalent to that of the source being measured.

11. In applying the formulas for determining dose rates obtained at various distances from the source, this equivalent value must be increased by the amount designated in the note at the bottom of the figure. This increased value is the absolute radium content (within the errors specified in the report) of the source.

12. The absolute value in milligrams of the radium in the source is to be used for M in the following:

$$R = \frac{9.3Me^{-ux}}{d^2}, \tag{2.1}$$

where R = roentgens per hour, u = 1.9 per cm for platinum, x = platinum wall thickness in centimeters, and d = distance from source in centimeters or

$$\text{mr/hr} = \frac{KM}{d^2}, \tag{2.2}$$

Form 301—M

UNITED STATES DEPARTMENT OF COMMERCE
WASHINGTON

National Bureau of Standards

Certificate

FOR

ONE SPECIMEN OF RADIUM SALT
NBS No. 26947

SUBMITTED BY

Eldorado Mining and Refining (1944) Ltd.,

Port Hope, Ontario, Canada.

DESCRIPTION.—The material is contained in a metal cell 11.2 mm long and 1.20 mm in external diameter. The specimen and container weigh 193.2 mg . The Bureau is informed that the material is a compound of *radium*. After the measurements had been completed the specimen with a card bearing the number of this certificate was enclosed in a package suitably inscribed and secured by a seal of this Bureau.

THIS CERTIFIES that the specimen described in the preceding paragraph has been compared with the Radium Standard of this Bureau and has been found to have a gamma radiation equivalent to that from

9.78 *milligrams of radium*

in radioactive equilibrium and contained in a tube of Thüringian glass 0.27 mm thick. The uncertainty in this value does not exceed 0.5 percent. Observations extending over 49 days indicate that the radium contained in the specimen is in radioactive equilibrium.

For the Director,
by

J. F. Curtiss

Test No. 118618 -7
November 18, 1948.

L. F. Curtiss, Chief,
Radioactivity Section,
Division of Atomic and Molecular Physics.

NOTE.—The Bureau is informed that the cell is of 10% iridium platinum and has walls 0.2 mm thick. On this basis if the radioactive material were contained in a glass tube of the kind specified above, the gamma radiation from the specimen when in equilibrium would be approximately 1.5 percent greater than the value named in the body of this certificate.

The observations upon which this certificate is based do not serve to distinguish between radium preparations and those containing mesothorium or radiothorium.

GPO 16—48087-3

Fig. 2.1. Sample Certification of Calibration by the National Bureau of Standards.

where d = distance from source in centimeters and K = factor as follows.

Material of Source Container	Thickness (mm)	K
Platinum	0.2	8900
Platinum	0.5	8400
Platinum	1.0	7800
Monel	1.0	8800
Monel	1.5	8500

For calibration purposes, Eq. (2.2) is more flexible.

13. At the ORNL Health Physics Calibration Unit, all standard sources used for gamma calibration consist of the radium salt in platinum, iridium, or Monel cylinders. These have been placed in an additional cylinder of aluminum which has a wall thickness of $\frac{1}{8}$ in. To facilitate handling (by means of an electromagnet), thin inserts of iron have been placed in the ends of these cylinders.

14. To prepare information for calibration purposes:

1. Increase the value named in the body of the report by the amount designated in the note at the end of the report.
2. Calculate the dosage rate, using Eq. (2.2), at not less than three convenient distances.
3. If the radium source is enclosed in an additional container, reduce the dosage rates obtained in (2) by the percentage attenuation of the cylinder. (The $\frac{1}{8}$-in.-wall aluminum cylinder attenuates, through the side wall, approximately 4% for sources contained in 0.5 or 1 mm of platinum, or 1 to 1.5 mm of Monel.)
4. Plot a curve, which should be a straight line, on logarithmic paper in milliroentgens per hour vs centimeters.

15. Example: First, refer to Fig. 2.1 to obtain corrected value of M:

$$M = 9.78 \text{ mg} - \frac{1.5}{100}(9.78 \text{ mg}) = 9.78 - 0.147 = 9.93 \text{ mg of radium} .$$

Second, calculate the dosage rate at 10, 30, and 100 cm, using Eq. 2.2. Note that the source, E-859, is contained in a platinum cell of wall thickness 0.2 mm; K for this wall is 8900. At 10 cm,

$$\text{mr/hr} = \frac{(8900)(9.93)}{10^2} = 884 \text{ mr/hr} ;$$

at 30 cm,

$$\text{mr/hr} = \frac{(8900)(9.93)}{30^2} = 98.3 \text{ mr/hr} ;$$

at 100 cm,

$$\text{mr/hr} = \frac{(8900)(9.93)}{100^2} = 8.84 \text{ mr/hr} .$$

Third, plot the values as indicated in the example shown in Fig. 2.2.

16. Any discussion of radium should include a warning about the serious hazards to health and property if the radium should leak or spill from the container. Every precaution should be taken in order to prevent breaking the container.

The $\frac{1}{8}$-in.-thick-walled aluminum cylinder is employed to reduce the potential hazards due to leakage.

Surgical cotton is placed in contact with each radium source once each week for at least 24 hr; it is then removed and placed near an alpha counter. If any radon has leaked from the source, a significant count will be obtained due to the radon and its decay products that have been trapped in the cotton.

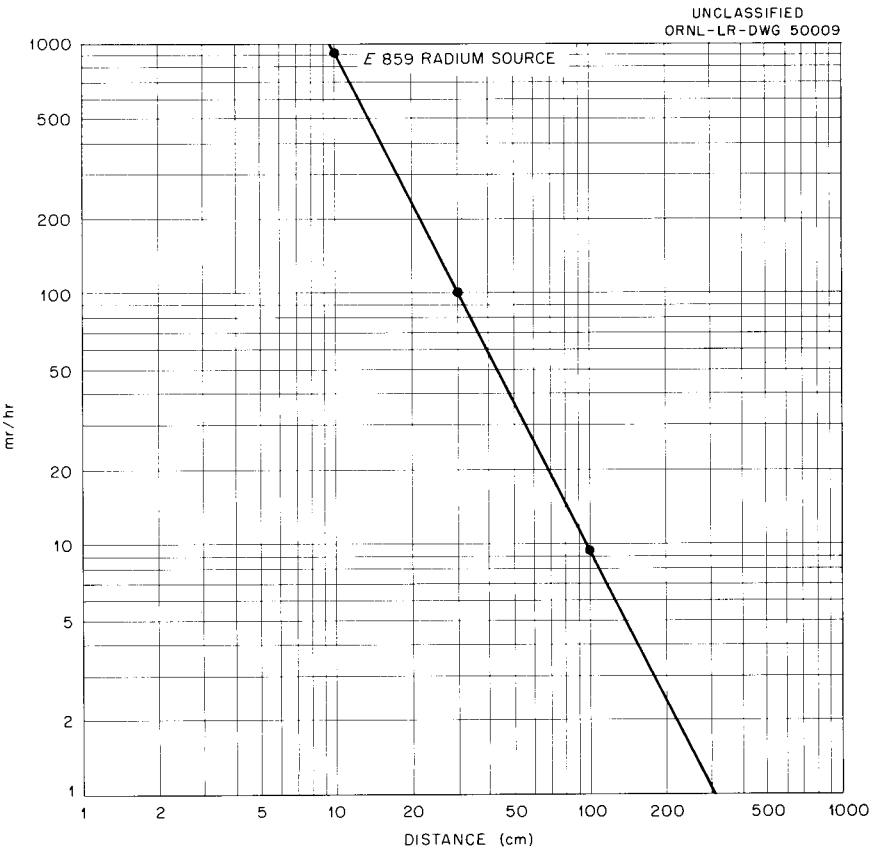

Fig. 2.2. A Typical Dose Rate vs Distance Curve for a Gamma Ray, Point Source.

2.1.2 Artificially Produced Radioisotopes

Source Material

Any gamma-ray emitter may be used for gamma calibration, particularly if it has the following properties:

1. A relatively long half-life, so that too-frequent decay corrections are not necessary.
2. Photon energies within the range 0.1 to 2 Mev, so that simplified calculations may be used.
3. A simple, accurately known decay scheme.

4. High specific activity. This permits the use of small sources.
5. Relatively short activation time in available fluxes.

Source Production

Artificially produced radioisotopes most commonly used as gamma sources are produced either by exposure to the neutron flux in a nuclear reactor or as products of nuclear fission.

For those materials produced by neutron activation, the curie content is a function of:

1. The amount of the stable isotope (target material) present before irradiation.
2. The neutron flux.
3. The time during which the material was exposed to the neutron flux.
4. The activation cross section of the target material.
5. The amount of contaminant in the target material, either as part of chemical compound or as an impurity. These may greatly decrease the effective activation cross section by "soaking up" neutrons which might otherwise activate the target material.
6. The time elapsed since exposure.

The specific activity of a radioisotope is usually expressed in terms of disintegrations per second per gram of target material or separated element. For a target irradiated in a neutron flux, there may be very few of the total atoms which are radioactive.

The specific activity of an element irradiated in a nuclear reactor is given, approximately, by the equation

$$S = \frac{1.64\sigma F}{10^{11}\ A}\ (1 - e^{-0.693t/T}),$$

where

S = the specific activity in curies per gram of the target element on removal from the reactor,

F = the neutron flux in neutrons cm^{-2} sec^{-1},

A = atomic weight of the element,

σ = activation cross section in barns (1 barn = 10^{-24} cm^2),

t = irradiation time,

T = half-life of isotope formed (same units as t).

After irradiation for approximately seven half-lives of the isotope formed, the decay rate approaches equilibrium with the production rate, and further irradiation is of little value in increasing the yield.

For an isotope whose half-life is long compared with the irradiation time (t less than $0.15T$), the following simplified equation may be used:

$$S = \frac{1.136\sigma Ft}{10^{11}\ AT},$$

where the units are the same as those above.

Dosage-Rate Determinations

1. Geometry considerations which apply to radium sources apply also to other gamma-ray sources.

2. By neglecting scattering, shielding, and self-absorption, the approximate dosage rate produced by gamma rays from a point source may be estimated.

3. For gamma-ray energies between 0.1 and 2 Mev, the air-absorption coefficient is approximately 3.5×10^{-5} per centimeter. Therefore, within this range of energies, the dosage rate is given approximately by the equation

$$R_f = 6CE ,$$

where R_f = roentgens per hour at 1 ft, C = curies of activity, and E = total energy of photons.

This equation is derived as follows: Let d = distance in centimeters, F = gamma flux in photons per square centimeter per second, and K = fraction of incident energy absorbed per centimeter in air (the absorption coefficient).

The gamma flux in photons per square centimeter per second is

$$F = \frac{3.7 \times 10^{10} C}{4\pi d^2} .$$

The energy absorbed per cubic centimeter is

$$KFE = \frac{K \times 3.7 \times 10^{10}}{4\pi d^2} CE,$$

where K is a function of E. In the range 0.1 to 1.5 Mev, the value is relatively constant and averages about 3.5×10^{-5} cm^{-1}.

The energy required to produce an ion pair in air is about 32.5 ev, and the number of ion pairs in 1 esu is 2.08×10^9.

By substituting these values, the dosage rate, in roentgens per hour, is

$$R_f = \frac{3.5 \times 10^{-5} \text{ cm}^{-1} \times 3.7 \times 10^{10} \text{ dis sec}^{-1} \text{ curie}^{-1} \times 10^6 \text{ ev/Mev} \times 3600 \text{ sec/hr} \times CE}{32.5 \text{ ev/ion pair} \times 2.08 \times 10^9 \text{ ion pair per cm}^3\text{/roentgen} \times 4\pi \times 929 \text{ cm}^2\text{/ft}^2},$$

$$R_f = 6CE ,$$

where R_f = roentgens per hour at a distance of 1 ft, C = curie content of the source, and E = total gamma-ray energy per disintegration, in million electron volts.

Or, if it is desired to use distances in meters,

$$R_m = 0.56CE ,$$

where R_m = roentgens per hour at 1 m, and C and E are the same as above.

4. Applications of these formulas are given as follows:

(1) To determine the gamma dose rate at a distance of 1 m from a 1-curie source of Co^{60}:

(*a*) Refer to Fig. 2.3 and note that the decay scheme of Co^{60} indicates that for each disintegration of Co^{60} there are emitted two gamma rays of 1.1 and 1.3 Mev respectively.

(*b*) Apply the formula:

$$R_m = 0.56CE ,$$

where C = 1 curie, E = (1.1 + 1.3), and R_m = (0.56)(1)(2.4) = 1.3 r/hr at 1 m.

(2) To determine the gamma dose rate at a distance of 1 ft from a 2.6-curie Au^{198} source:

(*a*) Refer to Fig. 2.4, the decay scheme of Au^{198}. The gamma spectrum, per disintegration, consists of 100% 0.41 Mev, 15% 0.16 Mev, and 15% 0.21 Mev photons.

(*b*) Apply the formula:

$$R_f = 6CE ,$$

where C = 2.6 curies, E = (100/100) (0.41) + (15/100) (0.16) + (15/100) (0.21), and R_f = 6 (2.6) (0.41 + 0.024 + 0.0315), R_f = 6 (2.6) (0.466), R_f = 7.3 r/hr at 1 ft.

5. If the curie content of the source is not known, and/or if the attenuation of the source container or other shielding agent is not known, the dosage rate may be determined by comparison with a standard source under "open-air" conditions.

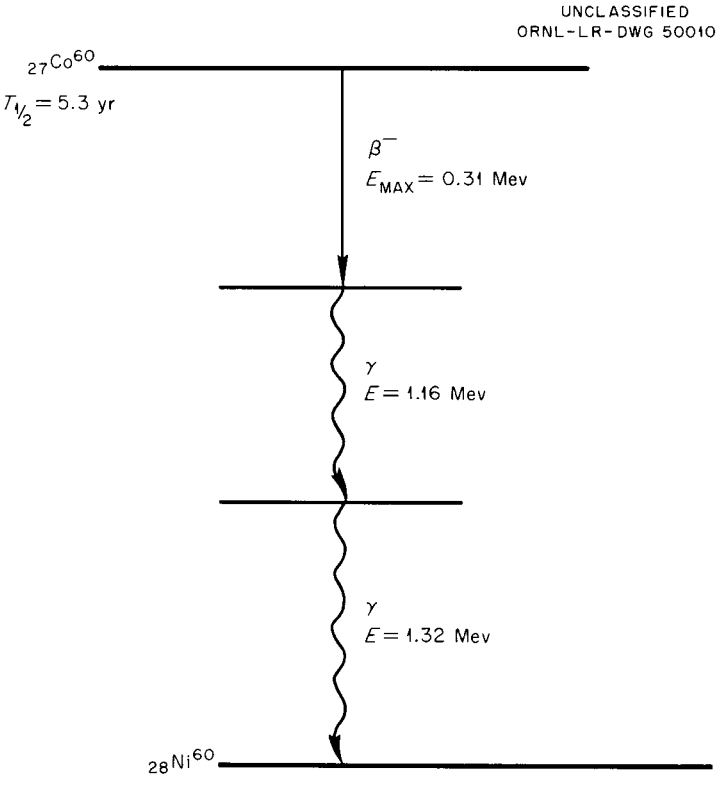

Fig. 2.3. Co^{60} Decay Scheme.

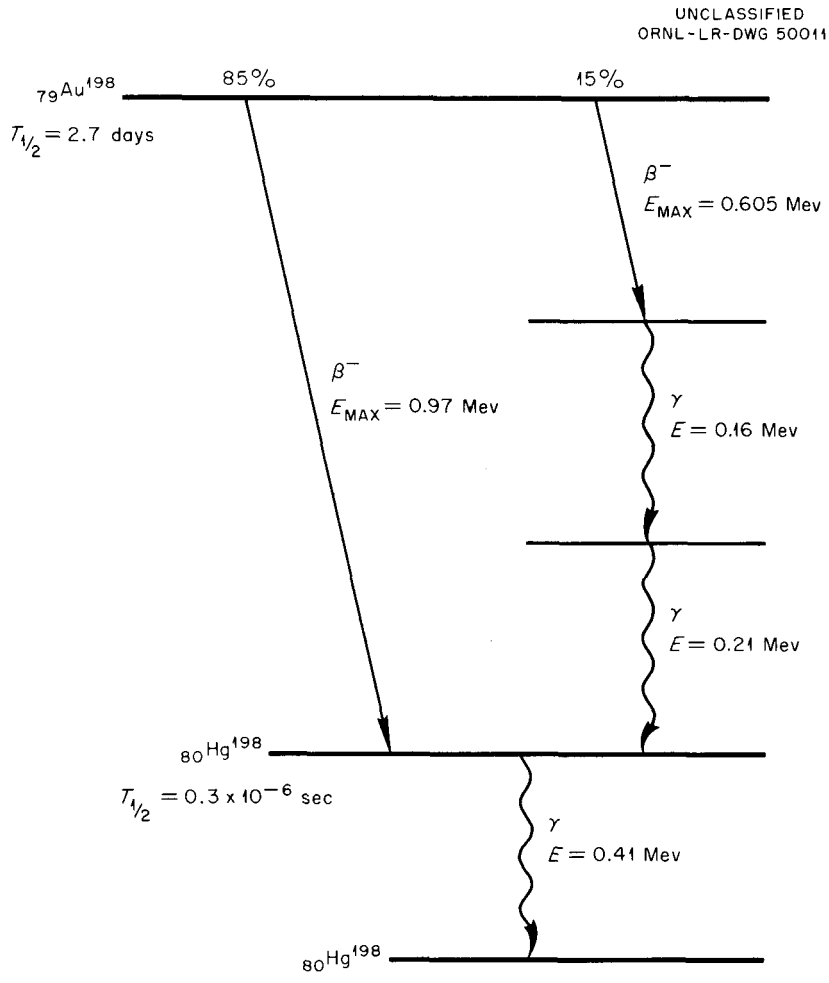

Fig. 2.4. Au^{198} Decay Scheme.

Computation of Dosage Rate When One Distance Is Known

Dosage rates at any distance may be calculated if the dosage rate at one distance is known and if the proper geometric conditions exist.

1. The law used to calculate the dosage rates is referred to as the "inverse-square law" and is written

$$\frac{R_1}{R_2} = \frac{d_2^2}{d_1^2},$$

where R_1 and R_2 are the dosage rates as a function of distances d_1 and d_2, respectively, from a point source.

2. The inverse-square law applies if R is in roentgens; only where the absorber between R_1, R_2, and the source is a uniform layer of air; where the photon energies from the source have approximately the same absorption coefficients in air; and where the distance from the source is such that the proper geometry is obtained (approximation to a point source).

3. A straight line is obtained if dose rate vs distance from the source is plotted on logarithmic paper. To plot such a calibration curve, do the following: (1) calculate or measure the dosage rate at one distance from the source, (2) calculate the dosage rate at a second convenient distance, and (3) plot a curve as shown in Fig. 2.2.

Decay of the Source

Radioactive decay of the source must be taken into account when it is used at some time after the initial curie-content determination.

The decline of the dose rate at a fixed distance varies with time as follows:

$$R = R_0 e^{-\lambda t} = R_0 \exp - [(0.693t/T)] ,$$

where

R = dose rate at time t,

R_0 = initial dose rate at $t = 0$,

t = time since initial dose rate determination,

λ = decay constant,

T = half-life, in same units as t.

A 2% reduction in dose rate is obtained when $t = T/35$; thus there is a 2% reduction in the dose rate from radium in $1600/35 \approx 46$ yr; Co^{60} in $60/35 \approx 2$ months; and Au^{198} in $2.7 \times 24/35 \approx 2$ hr.

A curve of relative dose rate vs time may be plotted as a straight line on semilogarithmic paper by letting the slope equal $(50\%/T)$. Figure 2.5 is the curve for Co^{60}.

Contributions by Scattering and Buildup Factors

Scattering and buildup factors may contribute significantly to the radiation dose from a point source under certain conditions. The formulas in Secs. 2.1.1 (12) and 2.1.2 (4,5) should be used only if the distance between the source and the detector is not less than six times the maximum dimension of either, if any scattering agent is not closer to the source or the detector than the distance between the source and the detector, and if the air buildup factor is insignificant.

2.2 BETA SOURCES

Beta-emitting isotopes may be used for calibration purposes if: (1) the dose rate from the beta emitter is known, (2) the source and the indicating device have the same geometry in all cases, (3) the beta emitter is used only as a secondary standard, and (4) the radioactive decay rate is taken into account.

2.3 ALPHA SOURCES

2.3.1 Preparation

Alpha sources are prepared by electroplating a metallic alpha emitter, usually uranium or plutonium, onto a disk of silver or platinum.

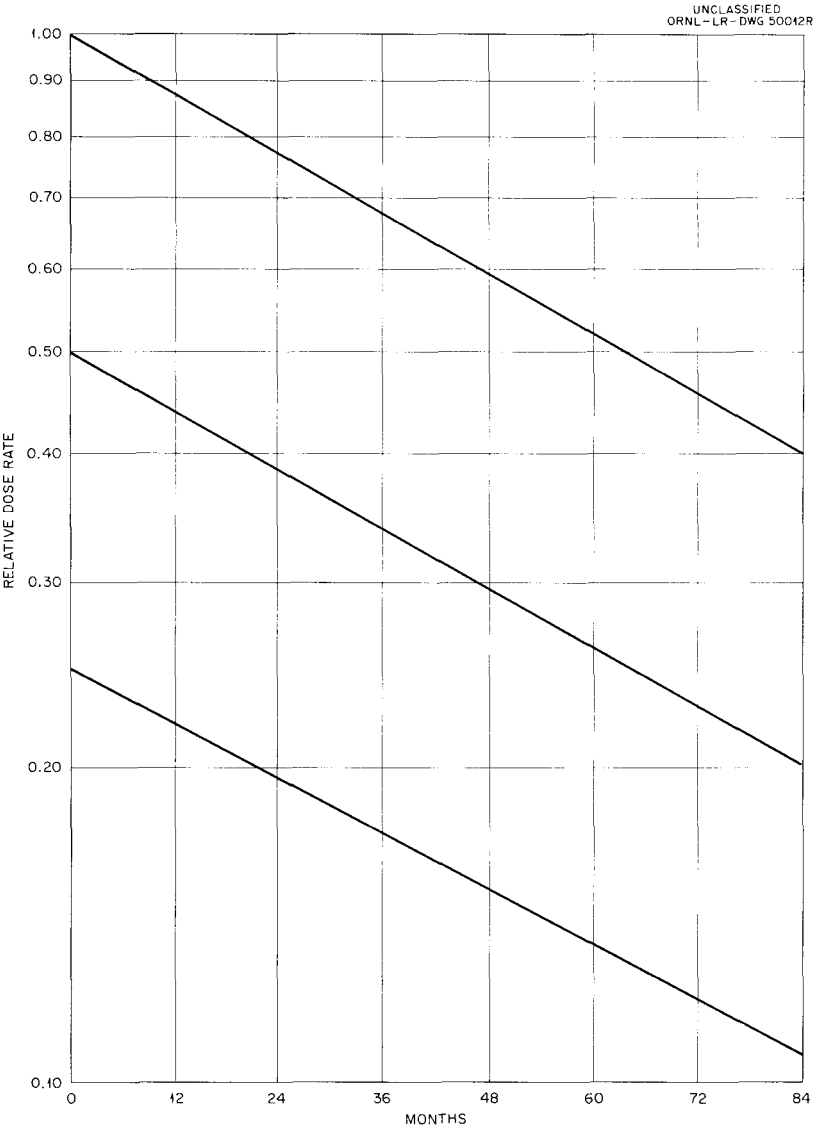

Fig. 2.5. Relative Dose Rate vs Time for a Co^{60} Source.

2.3.2 Assay

The prepared source is assayed, in terms of disintegrations per minute, using a standard alpha counter.

2.4 NEUTRON SOURCES

2.4.1 Types of Sources

Neutron sources may be the following types: polonium-beryllium, radium-beryllium, polonium-boron, and others.

The first three sources emit neutrons due to nuclear reactions between the beryllium or boron and the alpha particles emitted by the polonium or radium.

2.4.2 Neutron-Flux Calibration

The source activity, in terms of total neutron flux, is usually given in the information accompanying the source. If such information is not available, a comparison with a source of known activity may be performed.

2.4.3 Allowance for Gamma Radiation During Flux Calibration

The principal radiation from neutron sources consists of fast, intermediate and thermal neutrons, and gamma rays – particularly in the cases where radium is the source of the alpha particles. In calibration, allowance should be made for this gamma radiation. Shielding must be provided, also, for the gamma as well as the neutron radiation.

2.4.4 Determination of Fast-Neutron Flux

Fast-neutron fluxes at a distance r from the source may be determined from the source-activity data as follows:

$$N_f \text{ cm}^{-2} \text{ sec}^{-1} = N(\text{total flux})/4\pi r^2 .$$

2.4.5 Fast-Neutron Energies and Their Effect on Calculations of Dose Rates

Fast-neutron dosage rates are a nonlinear function of the energies of the fast neutrons, so that the neutron energy must be known in order to calculate the dose rate.

2.4.6 Optimal Thickness of Paraffin Used to Thermalize Neutrons

Thermal neutrons may be obtained by placing the neutron source within a layer of paraffin.

1. If the neutron source is of small dimensions, it may be placed at the center of a cylinder of paraffin such that the source is surrounded by a minimum of 4 in. of paraffin. If the paraffin thickness is much less than 4 in., the ratio of thermal to fast neutrons decreases. If the paraffin thickness is increased beyond 4 in., there is no increase in the ratio of thermal to fast neutrons.

2. By means of the indium-foil method, it has been determined that 4 in. of paraffin thermalizes the fast flux such that the thermal flux, at any point within a range of 2 m from the source, is 40% ($\pm$3%) of the fast flux which would be obtained if the paraffin were removed.

2.5 SPECIAL SOURCES

2.5.1 Hand and Foot Counter Calibration Sources

Hand-Counter Calibration Source

Figure 2.6 is a photograph of a hand-counter calibration source. The construction of the hand-counter source is based on a tolerance value of 50 mrad per week per square inch to an average hand (21 in.^{2}) and a dose rate of 240 mrad/hr at the surface of normal uranium.

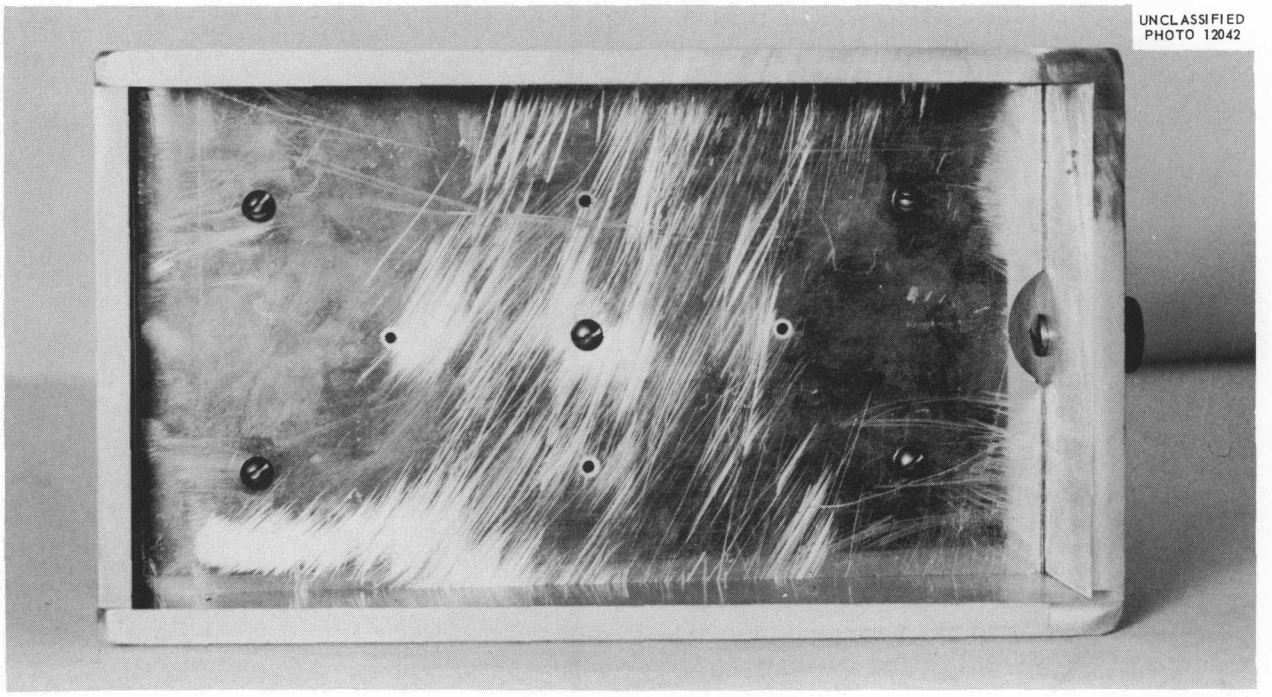

Fig. 2.6. Source for Hand Monitor.

If 1 in.^{2} of uranium gives a dose of 240 mrad in 1 hr to 1 in.^{2} of a surface with which it is in contact, then

$$\frac{50}{240 \times 168}\left(\frac{\dfrac{\text{mrad}}{\text{week} \times \text{in.}^2}}{\dfrac{\text{mrad}}{\text{hr} \times \text{in.}^2 \times \text{in.}^2 \text{ of U}} \times \dfrac{\text{hr}}{\text{week}}}\right) = 1.24 \times 10^{-3} \text{ in.}^2 \text{ uranium .}$$

Therefore, a dose of 50 mrad/week will be received by 1 in.^{2} of area exposed to 1.24×10^{-3} in.^{2} of uranium.

An area of 21 in.^{2} will receive an average dose of 50 mrad per week per square inch if exposed to 2.625×10^{-2} in.^{2} of uranium. Thus, an area of 0.02625 in.^{2} of uranium would give, at contact, the maximum permissible dosage to the hand. The hand-counter sources have exposed an area of 0.02625 in.^{2} of normal uranium 0.020 in. thick.

Foot-Counter Calibration Source

Figure 2.7 is a photograph of a foot-counter calibration source. The source for the foot counter is constructed similarly to the hand-counter source as follows:

1. Maximum permissible exposure is taken as 0.6 mrad/hr = 100 mrad/week.
2. The area of a shoe bottom is assumed to be 40 in.^{2}.

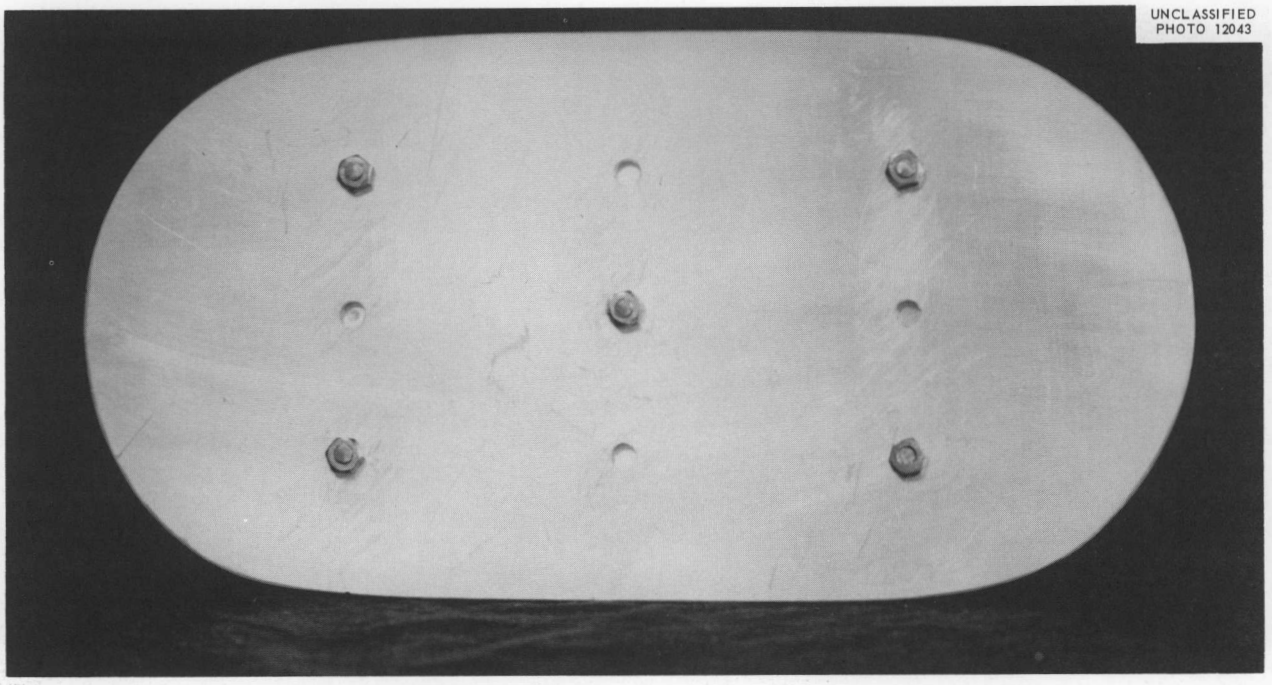

Fig. 2.7. Source for Foot Monitor.

3. The area of uranium exposed in each foot source is:

$$A = \frac{100 \text{ mrad/week} \times 40 \text{ in.}^2}{240 \text{ mrad/hr/in.}^2 \times 168 \text{ hr/week}} = 9.9 \times 10^{-2} \text{ in.}^2 .$$

2.5.2 CAM Calibration Source

Figure 2.8 is a photograph of a CAM calibration source. The preparation of the source is based on the following factors: (1) collection of air containing 3×10^{-9} $\mu c/cm^3$ of particulate beta-gamma activity, (2) a collection period of 30 min, (3) an air-flow rate of 5 ft^3/min, and (4) a collection efficiency of 70%. These factors may be used to obtain the following: 70% × 28,320 cm^3/ft^3 × 5 ft^3/min × 30 min/sample × 3×10^{-9} $\mu c/cm^3$ × 3.7×10^{-4} dis/sec/μc = 332 dis/sec per sample.

The preparation of the source consists in adjusting the area of a portion of sheet uranium such that the counting rate when mounted within the plastic holder is equivalent to 332 dis/sec.

The plastic holder is machined to fit within a slot of the CAM filter-paper holder.

2.5.3 Laundry Monitor Calibration Source

Figure 2.9 is a photograph of the source used for checking the laundry monitors. The source assembly is similar to that for the hand and foot counter and is based on the following factors: (1) area of source face = 100 $in.^2$ (10 × 10 in.), (2) maximum permissible exposure value of 0.75 mrad/hr/100 $in.^2$, and (3) beta

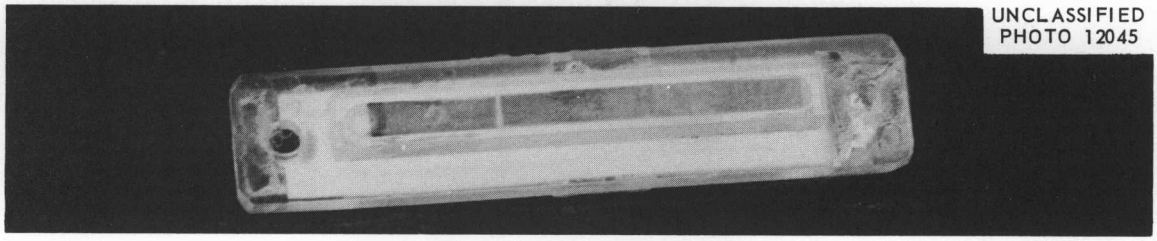

Fig. 2.8. Source for Beta-Gamma Air Monitor.

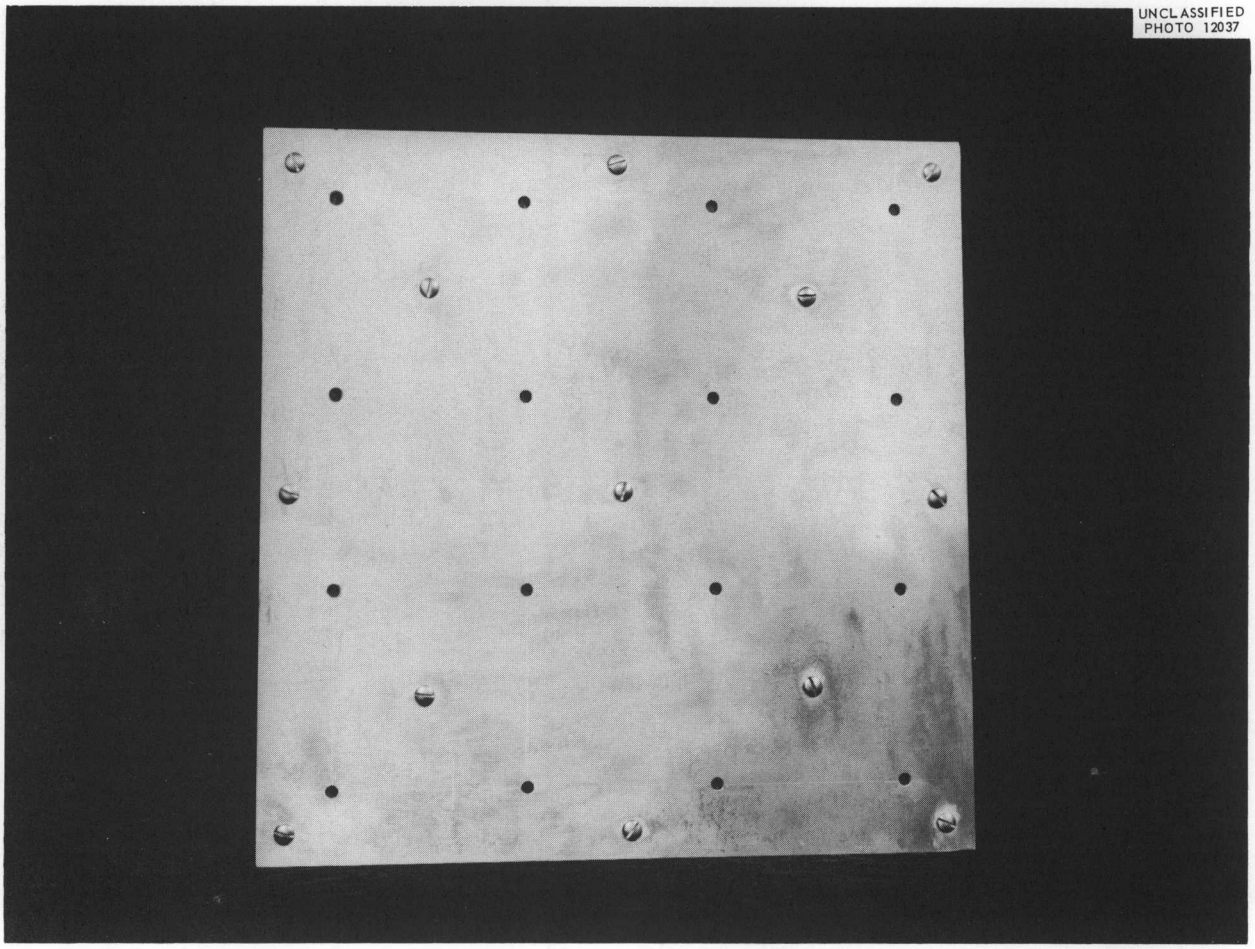

Fig. 2.9. Source for Laundry Monitor.

dosage rate at the surface of normal uranium = 240 mrad/hr/in.^{2}. The area of uranium exposed is

$$\frac{75 \text{ mrad}}{240 \text{ mrad/in.}^2} = 0.313 \text{ in.}^2.$$

The source exposes 16 uranium circles, each of 0.160 in. diameter.

2.6 GAMMA CALIBRATION DEVICE FOR MONITORING FILM

Figure 2.10 is a photograph of the film-badge mounting ring, source tube, and source-storage shield. Figure 2.11 is a photograph of the operating console. Figure 2.12 is a block diagram of the functional parts.

When not in operation, the source is situated within the lead shield. The source is raised from the shield to the stop at the top of the plastic tube when the vacuum pump is switched on. The timers may be set for exposure periods ranging from 1 min to 24 hr. At the end of the exposure period, the vacuum pump is shut off automatically, and the source drops into the shield.

The exhaust gas from the pump is filtered through two oil and wool-fiber filters and then passes through a paper filter which is located at the window of a G-M tube. This tube is connected with a counting-rate meter. A relay connected with the counting-rate meter will actuate an alarm if the counting rate exceeds a preset level.

The source shield will accommodate two sources, either of which may be selected by a switching device. The sources normally used are 100 and 500 mc of radium.

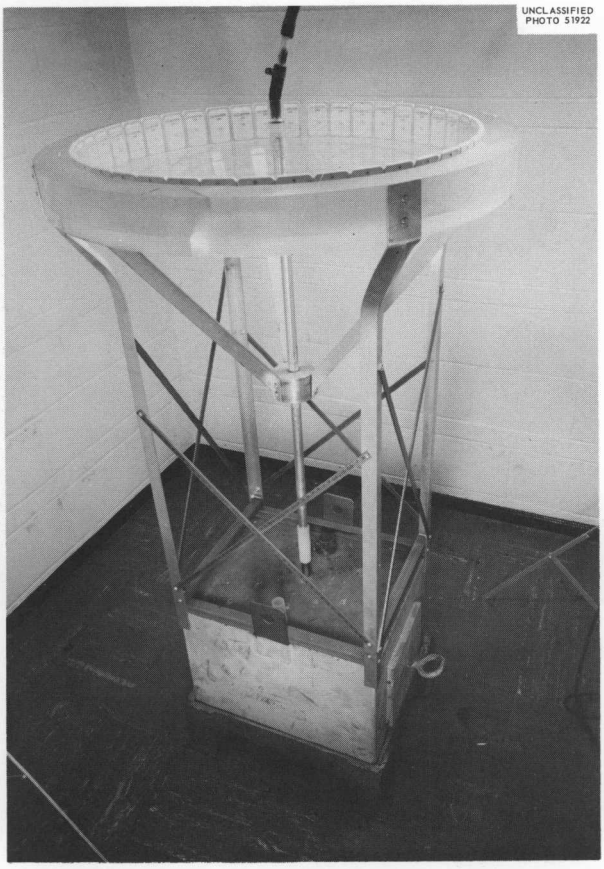

Fig. 2.10. Device for Gamma Calibration of Films and Pocket Chambers.

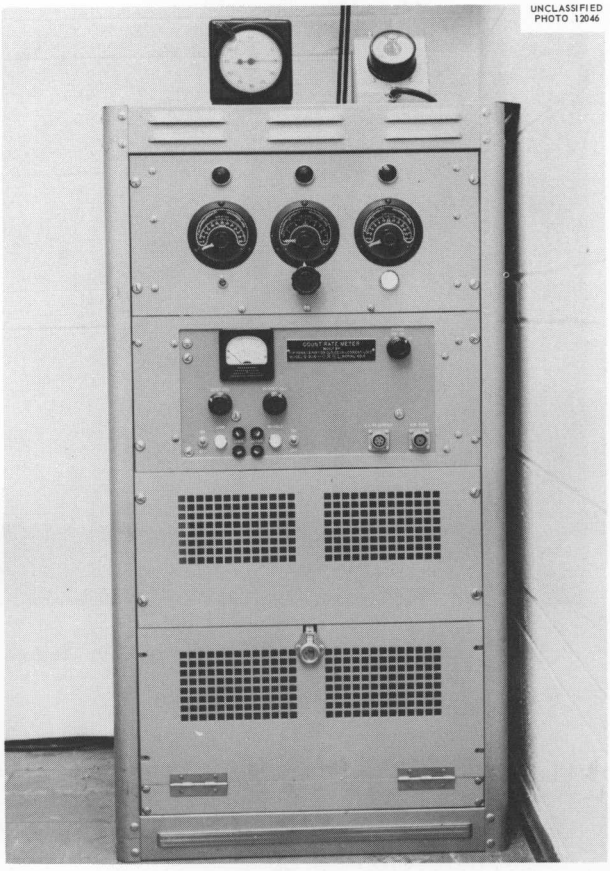

Fig. 2.11. Monitoring and Operating Console for Gamma Calibration Device for Films.

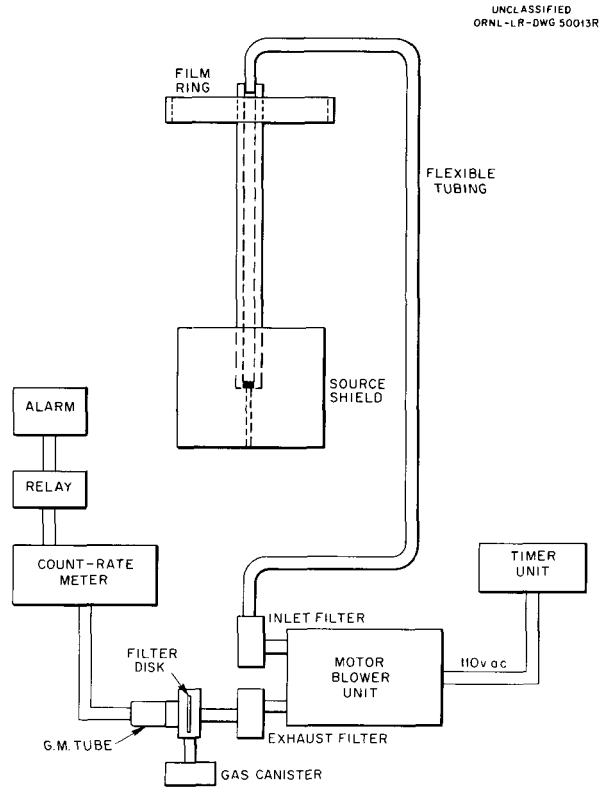

Fig. 2.12. Diagram of Gamma Calibration Device for Films.

2.7 CALIBRATION DEVICE FOR IONIZATION CHAMBERS ("WELL")

Figure 2.13 is a photograph of the device (termed the "well") used for gamma calibration of ionization chambers. The radiation dose rate at the position occupied by the ionization chamber is determined by a primary calibration. Due to the collimation and filtration applied, close agreement with the inverse-square law is obtained. The plastic platform serves three functions: (1) as a support for the ionization chamber, (2) as a means of transporting instruments between the operator and the proper position over the well, and (3) as the prescribed thickness of air-equivalent material necessary for assuring that the secondary radiation is in equilibrium with the medium (air) in which it is being measured.

The movable lead filter may be used to reduce the radiation by a factor of approximately 5.

By means of the controls on the operator's panel, the source may be adjusted to ±1 mm as read from the indicating register. Controls are supplied, also, for moving the plastic platform to and from the operator and for inserting or removing the lead absorber.

The well, which is 15 ft deep, serves to minimize the time required for calibration and to reduce the radiation exposure to personnel.

A 1-g radium capsule is normally used as a source in the well.

Signal lights indicate the relative level of the source in the well.

The source is contained in a holder mounted on a rider which travels up and down along a track mounted to the side of the well (Fig. 2.14).

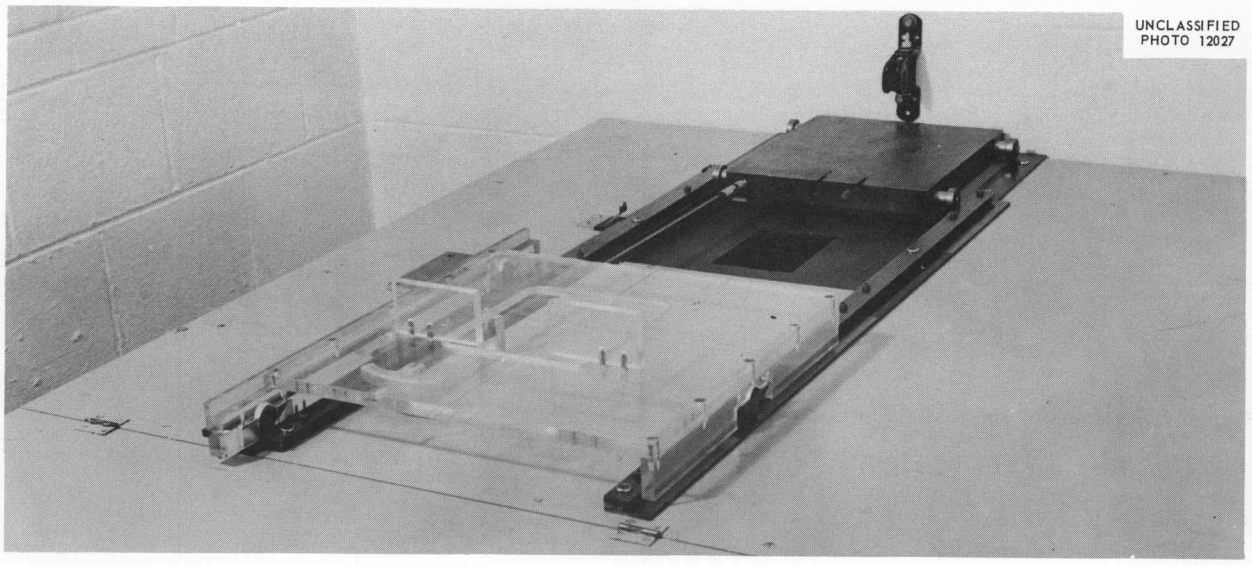

Fig. 2.13. Operator Controls and Exposure Platform of "Well" Gamma Calibration Device.

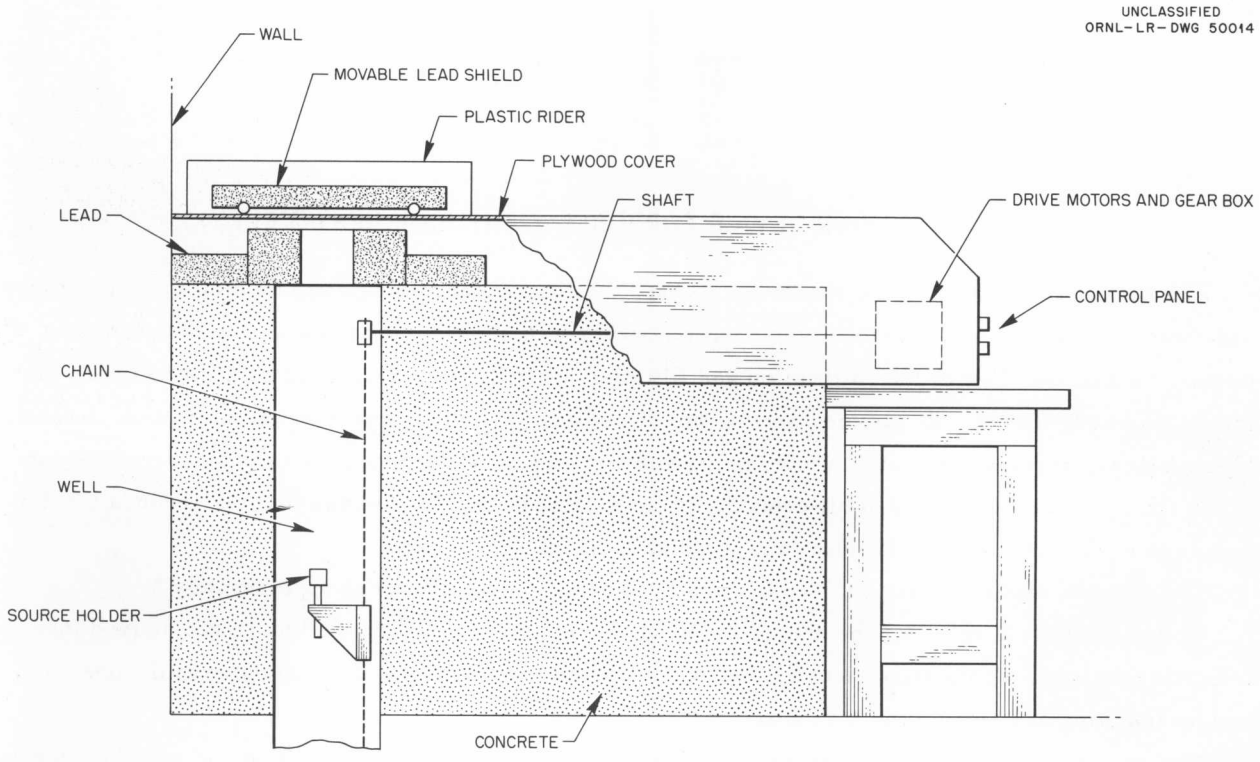

Fig. 2.14. Sectional View of "Well" Gamma Calibration Device.

An electric motor, gears, and chain drive are employed to raise and lower the source. Limit switches prevent overrunning at top and bottom.

An additional motor is used for positioning the plastic platform.

2.8 CALIBRATION DEVICE FOR G-M SURVEY METERS

Figure 2.15 shows the calibration setup for G-M survey meters. Distance vs dosage rate is determined by a primary calibration. The source used is 1 mc of radium. The distances are indicated for dosage rates of 1, 2, 5, 10, 15, and 20 mr/hr.

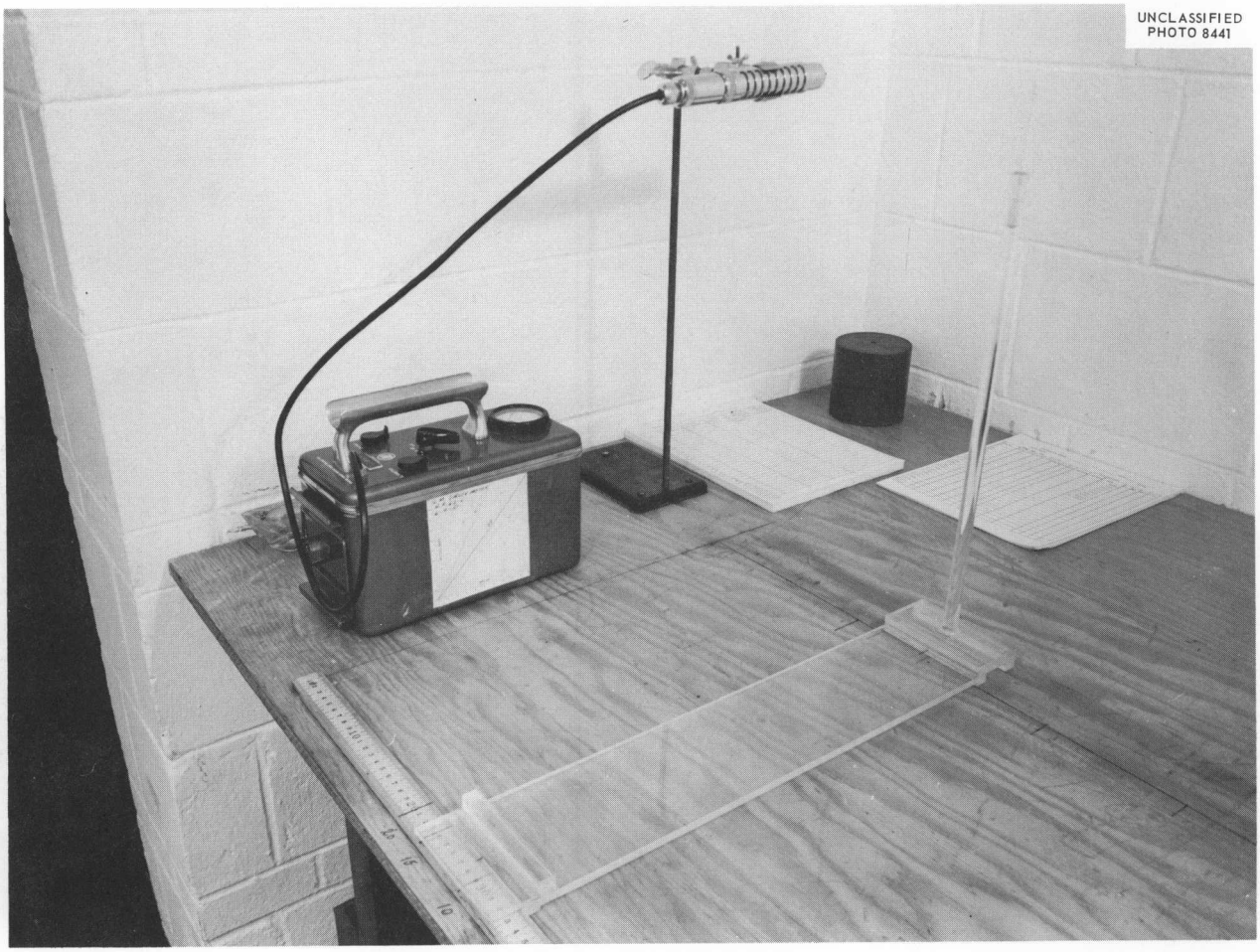

Fig. 2.15. Calibration Setup for G-M Survey Meters.

2.9 CALIBRATION DEVICE FOR ELECTROSCOPES

Figure 2.16 shows the calibration setup for electroscopes. Distance vs dosage rate is determined by a primary calibration. The lead door serves both to reduce the dosage rate for calibration purposes and to shield the source when not in use. Dosage rates within the range from 1 to 1000 mr/hr are obtained within the 5-ft length of the table, and there is a 25-mc radium source mounted in the lead box.

Fig. 2.16. Setup for Gamma Calibration of Electroscopes.

2.10 ALPHA CALIBRATION SOURCE

Figure 2.17 shows one of the sources used for alpha-particle calibration. The source is prepared by electrodepositing plutonium on a stainless steel disk. The disk is mounted on a Bakelite plaque to facilitate handling. The sources cover the range 250 to 250,000 dis/min.

2.11 CALIBRATION OF THERMAL-NEUTRON SURVEY METER

Figure 2.18 shows the paraffin-filled container used for the thermalization of neutrons from a Po-Be source. In use, the source is situated at the center of the paraffin cylinder such that at least 4 in. of paraffin are interposed between the source and the point of measurement. Thermalization is approximately 40% for the distances used.

The instrument shown is a developmental model.

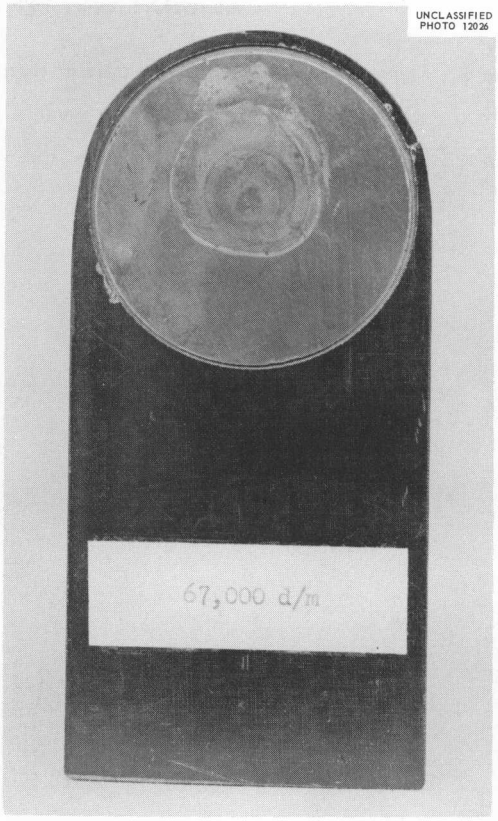

Fig. 2.17. Typical Alpha Calibration Source.

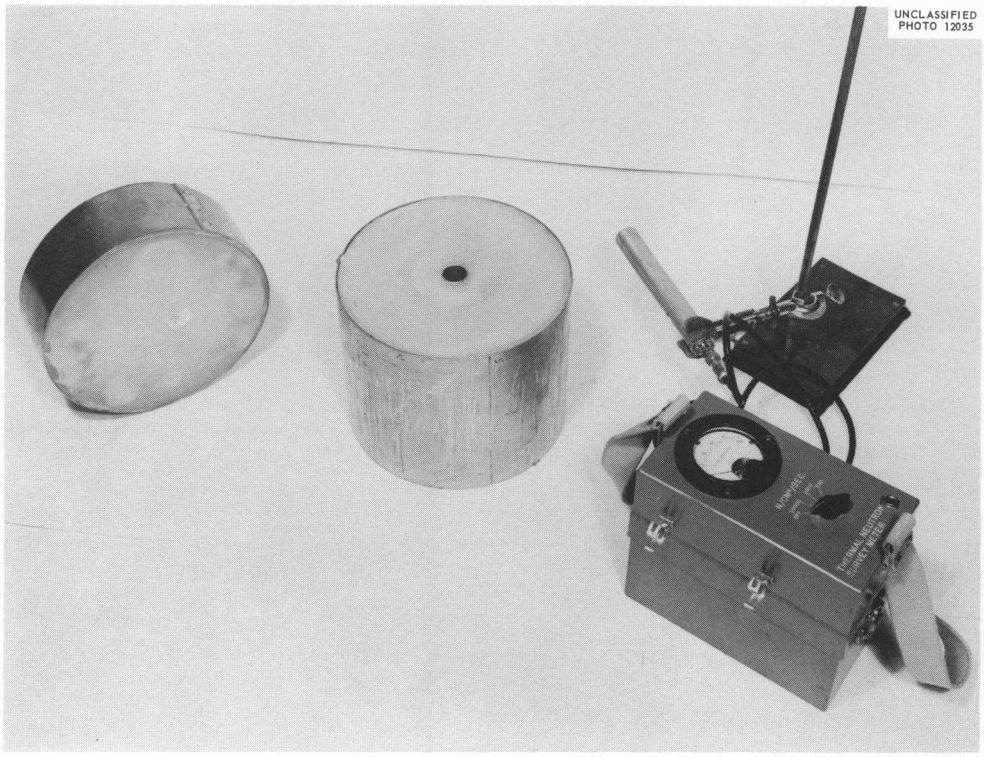

Fig. 2.18. Setup for Thermal-Neutron Calibration.

2.12 CALIBRATION OF FAST-NEUTRON SURVEY METER

Figure 2.19 shows the setup for the calibration of fast-neutron dosimeters. The dosimeter probe is mounted in the jig provided at one end; the gamma or neutron source is seated on the source mount, which may be moved along the track. The distance from the center of the source to the center of the counter is read directly from the attached metric scale.

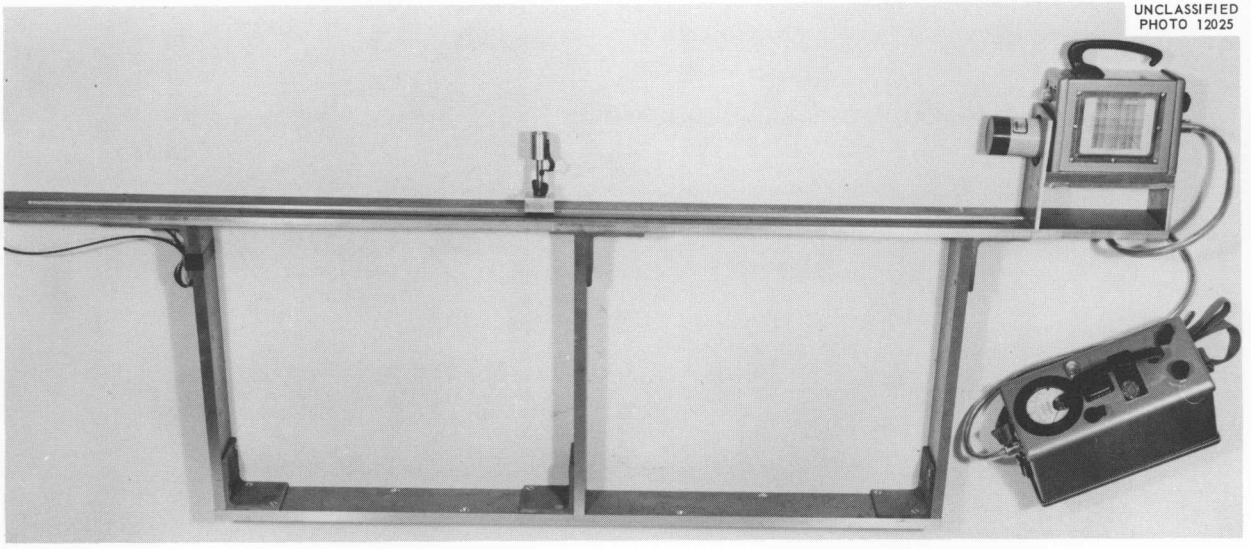

Fig. 2.19. Device for Fast-Neutron Calibration.

Part 3

The ORNL Badge Dosimeter and Its Application to Personnel Monitoring

3.1 INTRODUCTION

The film dosimeter in a variety of forms has been used since the beginning of the Atomic Energy Program by nearly all installations handling significant quantities of radioactive materials. Methods for overcoming or circumventing most of the disadvantages of film dosimetry, such as the photon-energy dependence, have been achieved mainly by placing the film in a properly designed package or badge.

Pardue, Goldstein, and Wollan[1] stated, as early as 1944, that a good pocket dosimeter should have the following qualifications:

1. It should have response for equal exposures in roentgens, as far as possible, that is independent of the quantum energy of radiation.
2. It should provide a means for accurately measuring doses within the range 0.1 to 20 r.
3. The response should be producible by ionizing radiation only.
4. The dosimeter should be small and light and should be adapted to routine processing in large numbers.

These fundamental requirements are still met in a properly designed and engineered film dosimeter, but they have been greatly extended to provide a method to differentiate between beta radiation and soft x or gamma radiation and to provide for emergency monitoring in case of high gamma and/or neutron exposures, particularly after or during criticality accidents.

3.2 HISTORICAL DEVELOPMENT OF ORNL DOSIMETER

A film badge using a 1-mm cadmium filter was made from tinplate on the basis of the pioneer work by Pardue, Goldstein, and Wollan. This badge was first used on the Manhattan Project at the University of Chicago. Later, it was adopted at some of the national laboratories, including the Oak Ridge National Laboratory (ORNL), and for a few years was widely used. Since the introduction of this "tin" badge at ORNL, there have been five basic changes in the design. Figure 3.1 shows these badges, including the "tin" model (No. 1). Badges 4 are identical, except for color, as are 5 and 6.

Basic design criteria for badge meters at ORNL always included attempts to develop badges that would permit dose interpretation according to the current recommendations of the National and International Committee on Radiation Protection. However, changes in badge design were not always a direct result of the evolution of rules governing the maximum permissible dose. Table 3.1 lists the types of badges, including the present badge, ORNL meter, model II, and dose measurement methods used at ORNL during the past 17 years.

3.3 DESCRIPTION OF THE ORNL BADGE METER, MODEL II

In July 1960, the ORNL badge meter, model II, was put into service at five AEC sites. Figure 3.2 shows the components in exploded view.

---

[1] L. A. Pardue, N. Goldstein, and E. O. Wollan, *Photographic Film as a Pocket Radiation Dosimeter*, CH-1553 (1944).

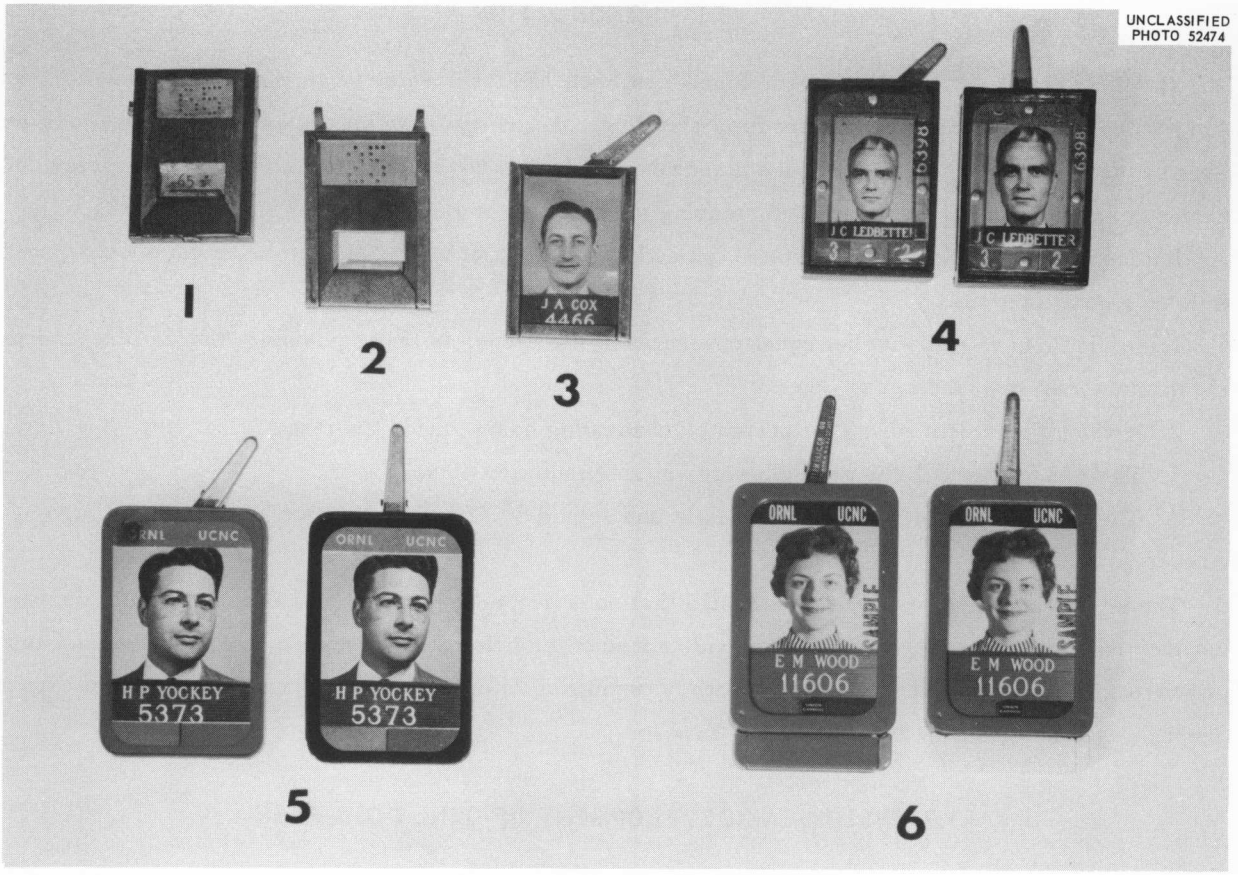

Fig. 3.1. Film Badges That Have Been Used at ORNL.

Model II is composed of four basic parts: (1) a laminated identification insert, (2) a front frame, (3) a filter assembly (slide), and (4) the badge back. All these parts, except the laminated photo, are molded from high-impact styrene.

The laminated photo consists of the following: (1) two sheets of polyester photo ID, each of which is 0.005 in. thick; (2) a paper insert (12- to 16-lb paper), 0.003 in. thick; and (3) a photo on coated printing paper. When laminated, the badge front is approximately 0.017 in. thick and represents an absorber of approximately 52 mg/cm^2. It is held in place by the front frame.

The slide provides for different absorbers which are essential to the system in the determination of doses from various energies of mixed radiations. The system requires that the radiation incident on the face of the badge be filtered in at least four areas over the usable portion of the photographic emulsions used in the badge. The four filtered areas include (1) a gold foil 0.005 mil thick placed between two pieces of cadmium, each 0.017 in. thick, and this combination represents an absorber of approximately 1000 mg/cm^2; (2) an aluminum filter 0.040 in. thick, which is an absorber of approximately 275 mg/cm^2; (3) a "thick" (0.070 in.) plastic area, which is an absorber of approximately 215 mg/cm^2; and (4) a "window" position where the only absorbers between the photographic emulsion and the front of the badge are the paper wrapper around the film (approximately 28 mg/cm^2) and the badge front (approximately 52

Table 3.1. Types of Badges and Dose Measurements at ORNL from 1944 to 1961[a]

Year[b]	Type of Badge (see Fig. 3.1)	Material Used	Filters	Maximum Permissible Dose	Doses Reported	Method of Determining Dose[c]	Films Used
1944	1	Tin	Cd W	0.1 rem/day	mrep mr	W Cd	552
1949	2	Stainless steel	Cd W	0.3 rem/week	mrep mr	W Cd	552 and fine-grained particle
1951	3	Stainless steel	Cd W	0.3 rem/week, penetrating + 0.2 rem/week, "soft" 1.5 rem/week (hands, feet)	mrep (PTR) mr	W-Cd Cd	552 NTA
1953	4	Plastic	Pb Cd Cu Pl W	0.3 rem/week, penetrating + 0.2 rem/week, "soft" 1.5 rem/week (hands, feet)	mrep (PTR) mr (Special analysis of films indicating x-ray exposures)	W-Cd Cd	552 NTA
1954	4	Plastic	Pb Cd Cu Pl W	Blood-forming organs, gonads – 300 mrem/week Lens of eyes – 300 mrem/week Skin – 600 mrem/week Soft radiation – 1500 mrem/week[d]	mrep (PTR) mr (Special analysis of films indicating x-ray exposures)	W-Cd Cd	553 NTA
1956	4	Plastic	Pb Cd Cu Pl W	Blood-forming organs, gonads – 300 mrem/week Lens of eyes – 300 mrem/week Skin – 600 mrem/week Soft radiation – 1500 rmem/week	D_p, >1000 mg/cm^2 D_m, 130 mg/cm^2 D_l, 300 mg/cm^2 D_s, 7 mg/cm^2	Cd (W-Pl) + Cd Cd or $\frac{1}{2}$ of (W-Pl) + Cd, whichever was greater Not determined from film	552 Type B

Table 3.1 (continued)

Year[a]	Type of Badge (see Fig. 3.1)	Material Used	Filters	Maximum Permissible Dose	Doses Reported	Method of Determining Dose[c]	Films Used
1958	5	Plastic	Cd Al Pl W	Blood-forming organs, gonads – 300 mrem/week >5(*N*-18)[e] Skin – 600 mrem/week >10(*N*-18) Hands and feet – 1500 mrem/week Soft radiation – 1500 mrem/week	D_p D_m D_l D_s	Cd (W-P) + Cd Cd or ½ [(W-Pl) + Cd], whichever was greater. Not determined from film	552 Type B-2
1959	6	Plastic	Cd Al Pl W	Critical organs: 3 rem/qtr >5(*N*-18). Other organs: Skin – 6 rem/qtr >10(*N*-18). Hands, etc. – 25 rem/qtr, 75 rem/yr	D_p D_m D_l D_s	Cd (W-P) + Cd. Cd or ½ [(W-Pl) + Cd], whichever was greater. Not determined from film	552 Type A
1961	6	Plastic	Cd Al Pl W	Critical organs: 3 rem/qtr, >(*N*-18)[e], Skin – 10 rem/qtr, 30 rem/yr	D_c (critical organs) D_s (skin)[f]	Cd 2.5 (W-Pl) + Cd	544 Type A

[a]Symbols: Cd, cadmium (after 1958, Cd-Au-Cd); W, window; Pb, lead; Cu, copper; Pl, plastic; and PTR, probable total reading.

[b]Changes in badges, maximum permissible dose, and methods of reporting dose did not normally occur at the same time. Hence, the year does not necessarily indicate that this was the date of a given change.

[c]Density behind the particular shield referred to a standard calibration curve.

[d]See Rule III, *NBS Handbook 59*.

[e]*N* is age in years of employee.

[f]This dose based on beta energies equivalent to those from uranium metal.

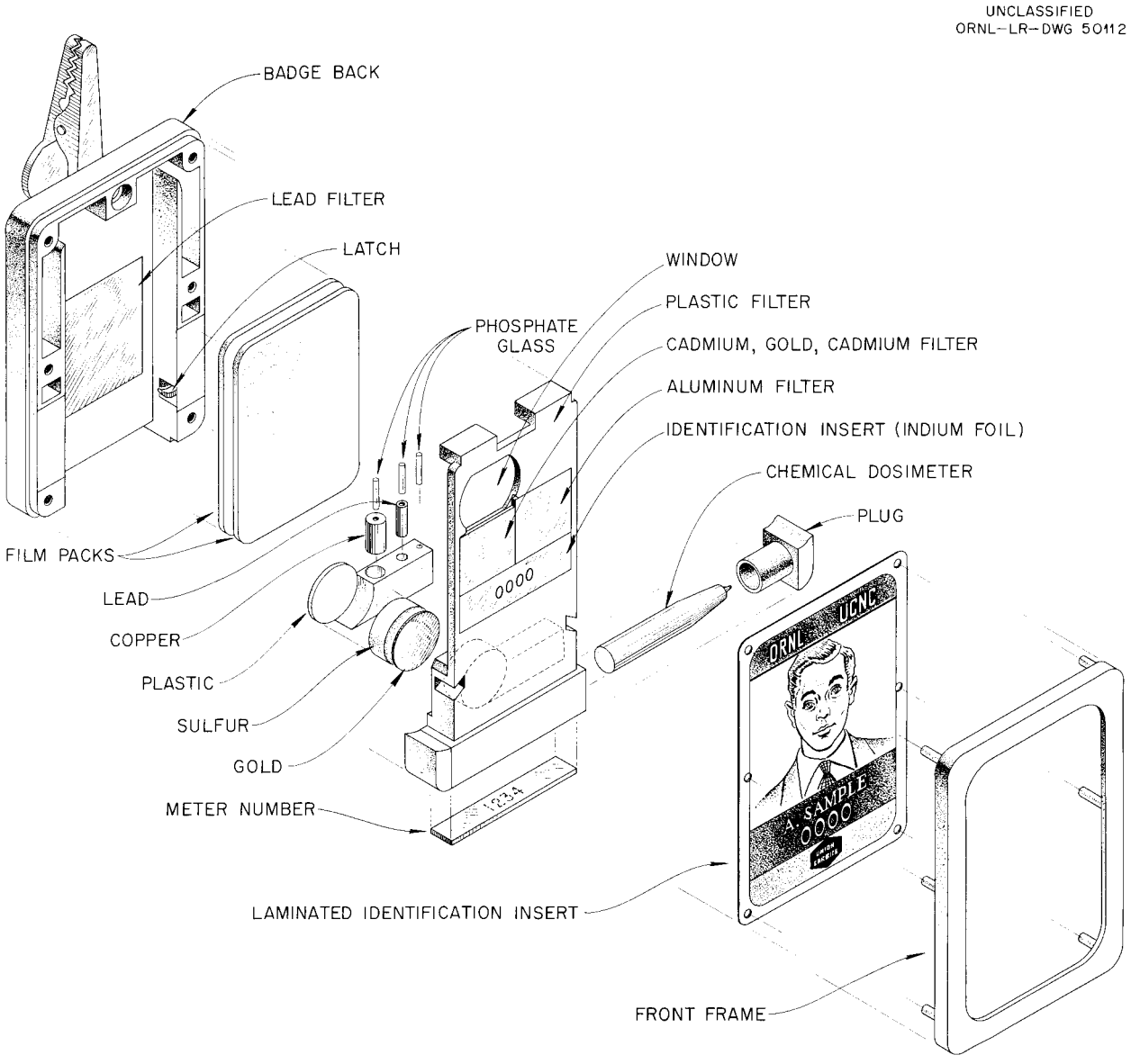

Fig. 3.2. ORNL Badge Meter, Model II.

mg/cm^2), which, taken together, represent a total absorber of approximately 80 mg/cm^2. Other components used in the slide include (5) an indium foil, (6) a sulfur pellet, (7) a "bare" gold foil, and (8) three metaphosphate glass rods with associate filters and plastic holder.

Applications of the model II badge-meter include (1) routine beta-gamma and neutron dosimetry, (2) criticality applications, (3) high doses resulting from accidents involving gamma radiation only, and (4) security identification.

3.4 BETA-GAMMA DOSIMETRY TECHNIQUES

3.4.1 Film Dosimetry

Beta-gamma film has the characteristics of an absorbed energy dosimeter, and, within the useful range, the density produced in the film is proportional to the rad dose of ionizing radiation absorbed in the film emulsion. Because of the *K* absorption and the emission of silver and bromine, which are constituents of the film emulsion, photon radiation with energy slightly above these *K*-absorption frequencies will be absorbed to a degree much greater than that if only Compton scattering were involved. This photoelectric absorption, with the attendant emission of accelerated orbital electrons and *K* and *L* x rays, produces secondary radiations within the emulsion far out of proportion to those which exist in air or soft tissue; thus, relative to air or tissue, the film is "energy-dependent" at these energies.

In order to determine the energy absorbed from an unknown dose of radiation in a given film emulsion, it is necessary to determine the quantity of free silver (converted from AgBr) per unit volume of the emulsion, and to compare this quantity with that produced by known doses of radiation. This is generally done by developing the film and comparing transmission densities of the unknowns with those of calibrated films. It should be emphasized, however, that direct comparison of densities in order to determine exposure should be performed only with films of the same production "lot," stored and handled under similar conditions, developed concurrently in the same solutions, and read with a single densitometer. Under these conditions 95% of the films will yield readings that are within ±10% of the actual value.

The density produced in the film emulsion by a calibrated roentgen dose is a function of (1) the manufacturer's emulsion type; (2) the production lot; (3) the base fog in the emulsion prior to development; (4) the energy of the radiation to which the film was exposed; (5) the type of developing solution; (6) the concentration and age of the developing solution; (7) the developing time; (8) the amount of agitation during developing; and (9) the rinse, stop bath, and fixing processes. The density determination is also subject to the accuracy of (10) the densitometer and (11) the capability of the operator. Of these 11 factors, none can be considered constant or controllable over long periods of time. For example, manufacturers modify or discontinue film and developer types; there may be differences of ±10% in the dose-vs-density response within a production lot; the base fog varies with the age and environmental history of the film, etc. Therefore, systems of dosimetry which are based on calculations involving comparative densities and which are evolved from studies of density vs dose under a given set of conditions at a given time are subject to considerable error in interpretation at later times. This is because the emulsions most used for dosimetry do not have produced in them a density which is a linear function of the dose which produced the density, and the degree of nonlinearity for a given emulsion type varies with the production lot, the base fog, and the total density. All the foregoing factors except (3) and (4) may be obviated by using calibrated films of the same type and lot as the monitoring films. The monitoring and calibrated films should be developed concurrently and read by a single operator on a single densitometer.

The base fog, item (3), is difficult to control or predict for films which are subjected to elevated temperatures, certain chemical vapors, and excessive aging. Every reasonable effort should be made to use films that are well within the manufacturer's expiration date and to avoid unnecessary exposure to heat.

With reference to item (4), one of the more difficult problems with film as a dosimeter for determining air or tissue dose involves the difference in photon energy dependence between the emulsion and air. If the film were to be exposed only to photon radiation of energies 200 to 5000 kev, the bare film packet would suffice as a dosimeter, or, if the film were exposed only to photon radiation of energies 20 to 5000 kev, a simple system of metallic filters would permit conversion to tissue dose. If beta (or electron) radiation were the only source of exposure, or, if it accompanied photon radiation of energies 200 to 5000 kev, the film dose may be compared directly with the absorbed dose in tissue, because the film is not energy dependent relative to tissue for these radiations. (However, for beta radiation one must consider the quantity of absorber and the consequent attenuation of the beta radiation prior to penetration to the emulsion and then interpret the tissue depth dose accordingly.) If the exposure is to an unknown mixture of beta and photon radiation, the dose may be difficult to interpret. Much of the work in film dosimetry at ORNL during the past few years has been directed toward this problem. Based on this work, techniques have been developed which permit us to determine, within limits, the dose in rads from mixed beta and photon radiation at various assumed depths in tissue.

NBS Handbook 59 (and supplements) contain recommendations for permissible doses to persons from external sources of radiation. These doses are functions of the type of radiation, the portion of the body exposed to the radiation, the age and previous exposure history of the person, and whether or not the person is occupationally exposed. Owing to the differences in biological importance and radiosensitivity among the organs and tissues of the body, they are divided into groups for dosimetry. Group I includes the whole body, the blood-forming organs at an average tissue depth of 5 cm, the lens of the eye at a depth of 3 mm, and the gonads at an average tissue depth of 1 cm (for the male); Group II includes all other organs, including the skin.

Since the permissible dose to a large volume of the body (organs of Group I) is no less than that for the male gonads, which are at an assumed depth of 1 cm in wet tissue, the dose for Group I may be determined at an equivalent tissue depth of 1 cm. The lens of the eye, at a tissue depth of 3 mm, may become the limiting organ in Group I under certain circumstances which, in practice, occur rarely. Where the exposure is primarily to beta rays, the limiting organ will normally be the skin. To quote from the recommendations of the ICRP, *Recommendations of the International Commission on Radiological Protection*, paragraph 51(*f*), "Where work involves exposure to β-rays of $E_{max} > 2.5$ Mev, eye shields or other suitable shielding may be necessary to keep the dose to the lens within permissible limits. In the case of exposure to β-rays of lower energy, if the provision of such shielding is impracticable, the small additional β-ray dose in the lens over the dose already permitted for more penetrating radiation, such as γ-rays and neutrons, is permissible, provided the dose in the skin is limited to the level recommended in paragraph 52(*a*)." Paragraph 52(*a*) specifies the recommended maximum permissible skin dose.

The methods for determining the doses at ORNL are as follows:

Step 1. – Calibration curves for the film types to be analyzed are based on the doses for which the films are calibrated (using a radium source) and the net densities obtained at the Cd(Cd-Au-Cd) filter area (Fig. 3.2).

Step 2. – The densities of the dosimetry films are determined for the window (W), plastic (Pl), aluminum (Al), and cadmium filter areas. These densities are denoted by the symbols W_D, Pl_D, Al_D, and Cd_D respectively. (At present no use is routinely made of the aluminum reading.)

Step 3. – The densities found according to Step 2 for each filter are converted to readings by reference to the calibration curve (the term "reading" is preferable, at this stage, to the term "dose," because the dose is yet to be calculated). These readings are denoted by W_R, Pl_R, Al_R, and Cd_R respectively.

Step 4. – The readings obtained in Step 3 are used to calculate the Group I dose D_c and the Group II dose D_s:

$$D_c = Cd_R \ , \tag{1}$$

$$D_s = 2.5\ (W_R - Pl_R) + D_c \ . \tag{2}$$

The skin dose D_s is the dose at 7 mg/cm^2 of tissue. The first factor in the D_s formula represents the beta radiation contribution to the total dose and presents the main problem in determining D_s. The 80 mg/cm^2 minimum absorber preceding the film emulsion in the radiation path does not allow an interpretation of film density or dose for all energies of beta rays. The constant (2.5) represents the compensation required by the difference in beta transmission through the 80 mg/cm^2 window and the 300 mg/cm^2 plastic filter when the beta radiation is from a slab of normal uranium. D_s is routinely determined making this assumption; however, if there is evidence that the exposure was to beta radiation of another energy, adjustment of the constant may be made by referring to beta absorption curves (Fig. 3.3). Permissible doses for employees at ORNL are summarized in Table 3.2.

3.4.2 Glass Dosimetry

Silver metaphosphate glass rods are used in the ORNL badge dosimeter to measure gamma radiation doses above 100 rads. The components of the glass system and their orientation in the badge have been described earlier in this report. There is a dual reason for having a three-rod system: First, the approximate effective energy of the radiation may be determined by comparing the relative responses of the lead, copper, and plastic shielded rods; and second, the possibility of losing dose information as a result of damaging a rod is greatly decreased.

The glass has been studied by Schulman[2,3] and others[4–6] with regard to its dosimetry characteristics, and its response is found to depend on the energy of the incident photons. Figure 3.4 shows the calculated

---

[2] J. H. Schulman, R. J. Ginther, and C. C. Klick, *J. Appl. Phys.* **22**, 1479 (1951).

[3] J. H. Schulman and H. W. Etzel, *Science* **118**, 184 (1953).

[4] N. J. Kriedl and G. E. Blair, *Nucleonics* **14**(3), 82 (1955).

[5] H. W. Etzel, R. D. Kirk, and J. H. Schulman, *Ra-Det* **8**(2), 49 (1955).

[6] A. L. Riegart, H. E. Johns, and J. W. T. Spinks, *Nucleonics* **14**(11), 134 (1956).

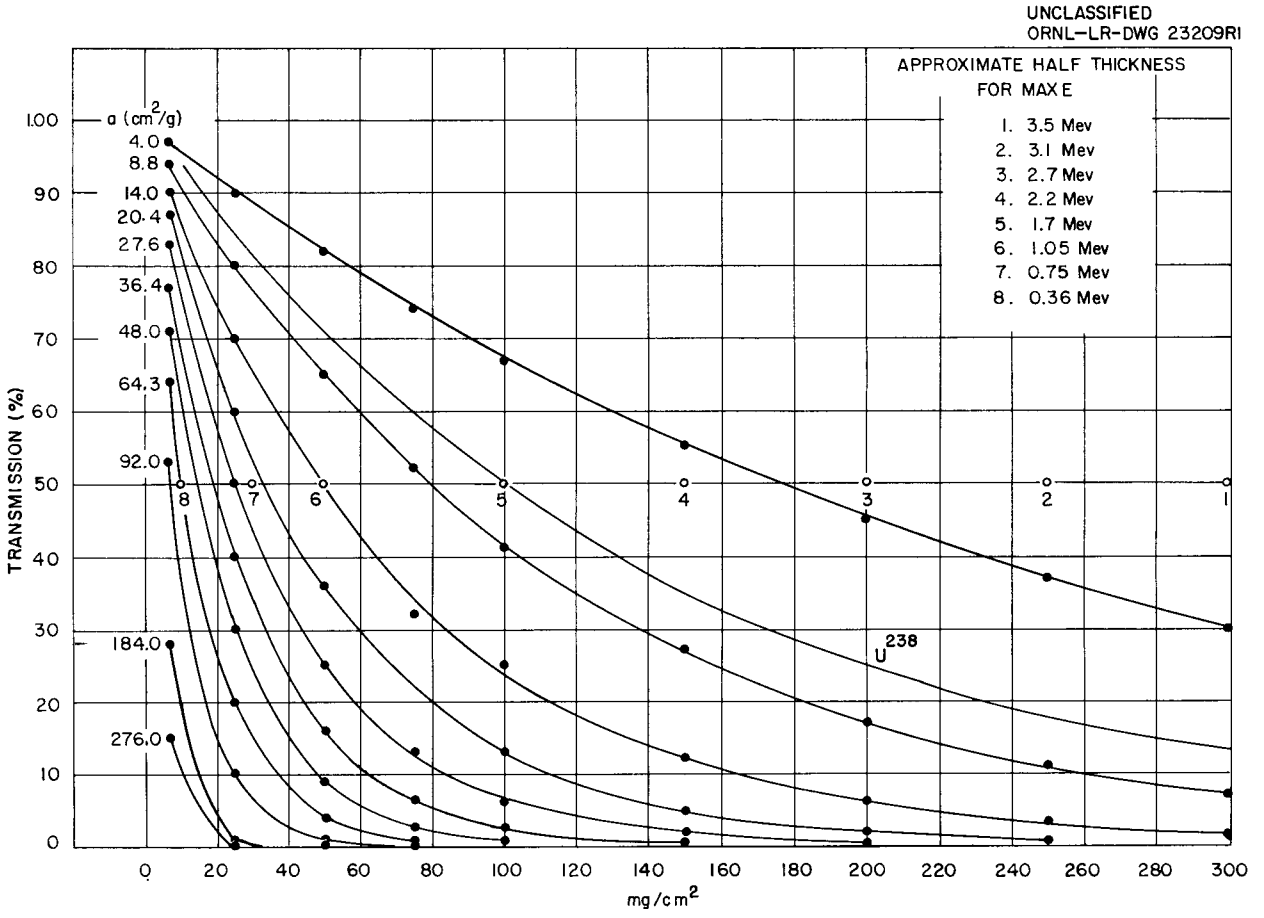

Fig. 3.3. Beta Absorption Data – Typical Curves.

Table 3.2. Maximum Permissible Doses for Employees at ORNL

Group	Limiting Tissue or Organ	Age Proration Formula (rem)	Maximum Yearly Dose (rem)	Maximum Quarterly Dose (rem)	Tissue Depth (absorber)	Dose Symbol
I	Male gonad	$5(N-18)^a$	12	3	1 cm (1000 mg/cm^2)	D_c
II	Skin	$30(N-18)$	30	10	0.07 mm (7 mg/cm^2)	D_s

[a] N is the age in years of the employee.

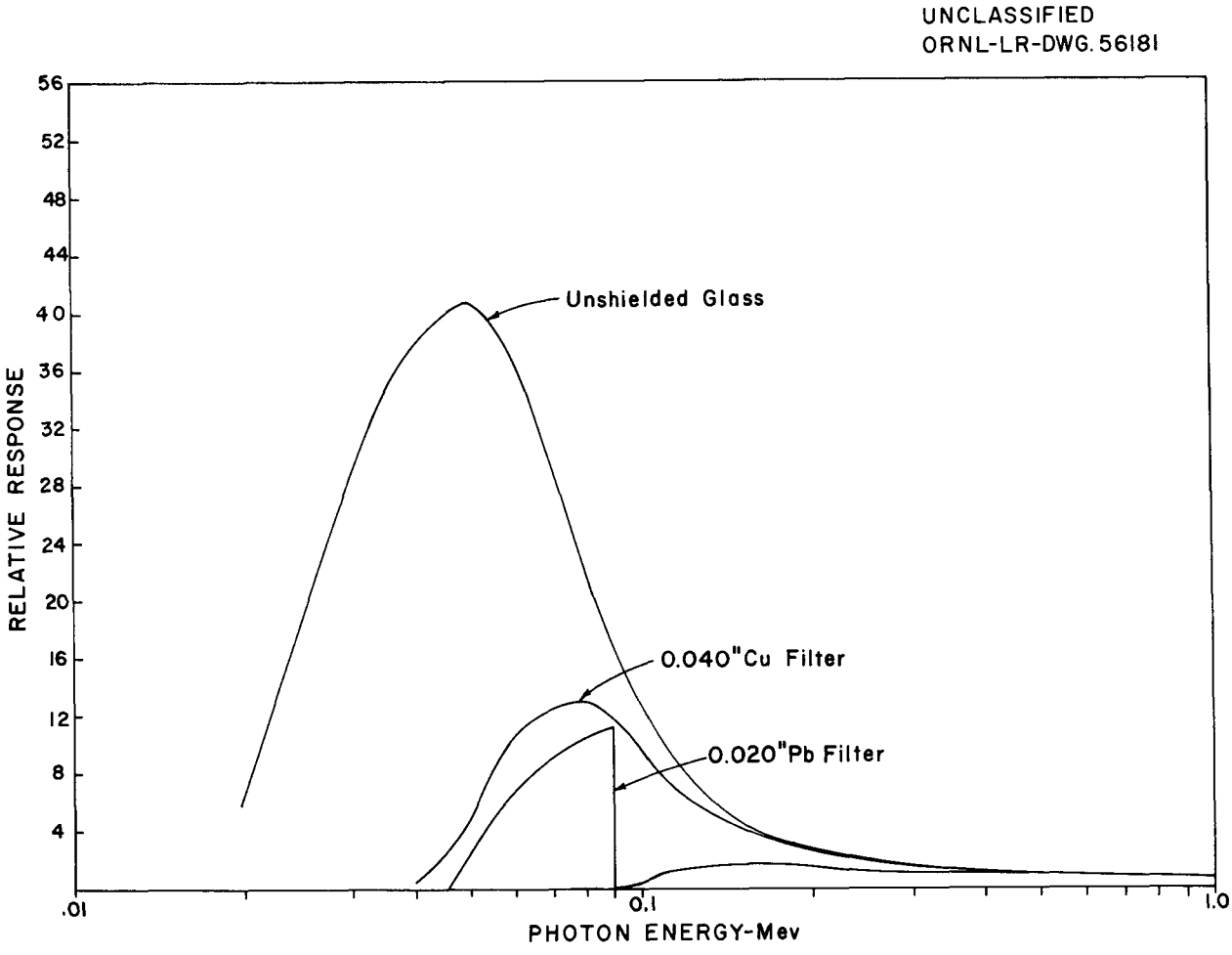

Fig. 3.4. Calculated Relative Response of Silver Metaphosphate Glass.

relative energy response of the shielded and unshielded glass based on energy absorbed.[7] Figure 3.5 is a plot of the ratios of unshielded to copper- and lead-shielded glass respectively. With these ratios a good estimate of the effective photon energy may be made, and the dose may be determined by correcting for energy dependence. To evaluate the dose received by a glass rod, a comparison of its fluorescence reading with those of a set of rods whose responses have been calibrated is made. Both the standards and the samples are read by using the same instrument.

The thermal-neutron sensitivity of the glass has been reported.[8] One roentgen-equivalent gamma response is produced by 3×10^9 thermal neutrons/cm^2. Therefore, for the determination of a gamma dose in a mixed neutron-gamma field, the thermal component as measured by the cadmium-shielded and unshielded

[7]W. T. Thornton and J. A. Auxier, *Some X-Ray and Fast Neutron Responses Characteristic of Silver Metaphosphate Glass Dosimeters*, ORNL-2912 (1960).

[8]S. Kondo, *Health Phys.* 4(1), 21 (1960).

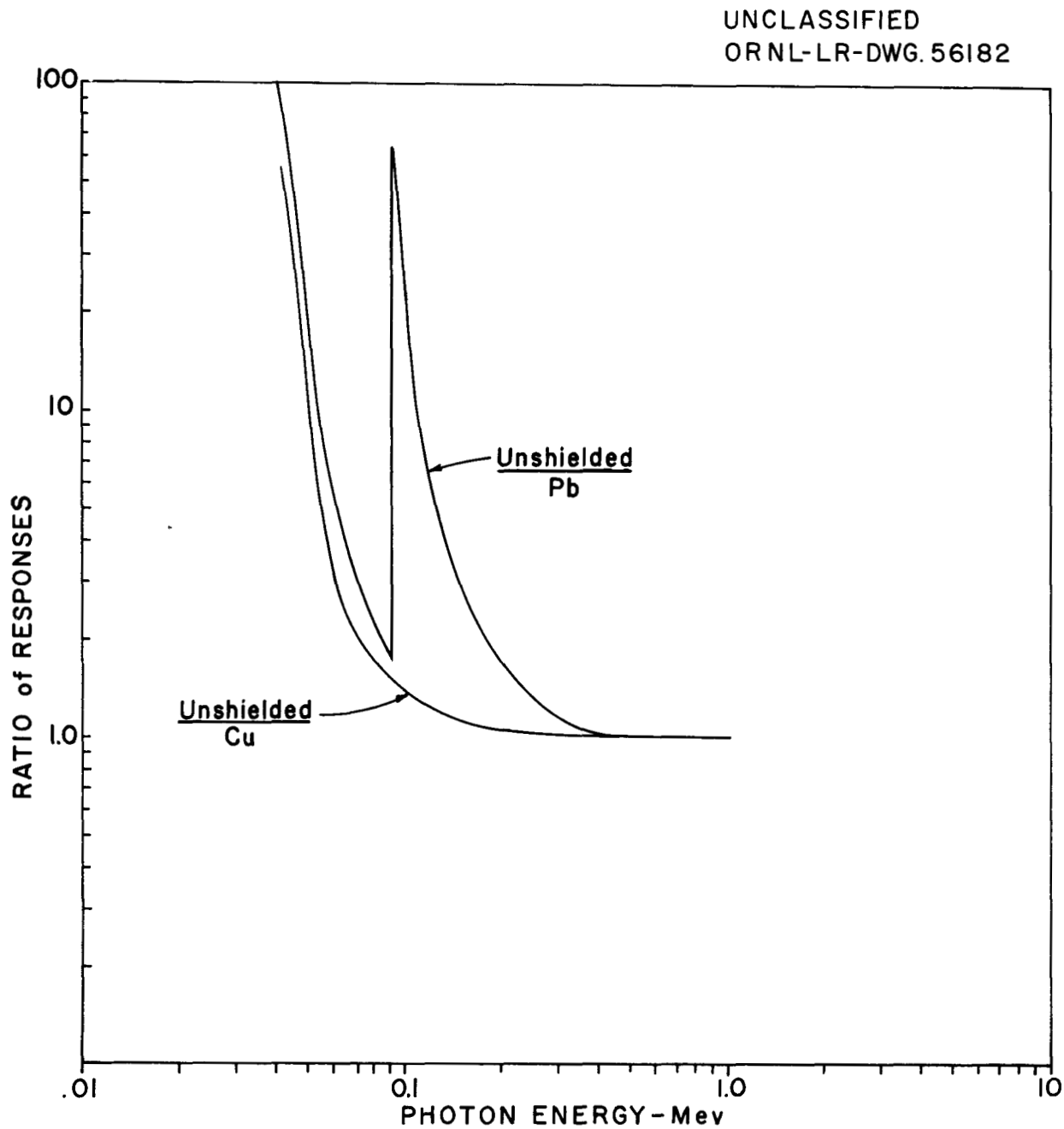

Fig. 3.5. Ratios of the Response of Unshielded Glass to Lead and Copper Filters in Badge Dosimeter.

gold foils must be subtracted. No significant reading is induced in the glass by fast neutrons of the energies most prevalent in a criticality event. The response of the glass per rad of fast neutrons relative to a rad of Co^{60} gamma rays is less than 0.7%.[7]

Presently, at ORNL, each employee has three rods in each of two badges, which are worn alternately for 13-week periods. A survey of about 600 rods worn for one quarter shows no detectable damage due to

installation, wearing, or removal. Figures 3.6 and 3.7 show the Bausch & Lomb microdosimeter reader and handling equipment.

3.4.3 Chemical Dosimeter

Chemical dosimetry continues to be considered as a potentially important adjunct to personnel monitoring. An acceptable chemical dosimeter would perform the very useful function of allowing a quick visual indication of the exposed persons following an incident involving gamma radiation and/or thermal neutrons.

3.5 NEUTRON-DOSIMETRY TECHNIQUES

3.5.1 Routine

Routine neutron dosimetry is accomplished through the use of the NTA neutron-sensitive emulsions manufactured by the Eastman Kodak Company. When exposed to fast neutrons, proton recoil tracks are produced in this film because of the elastic collisions of neutron and hydrogen nuclei in the film base, the emulsion, and the film wrapper, as shown in Fig. 3.8. The emulsion at the "window" position of model II is sensitive to thermal neutrons which are captured by elemental nitrogen in the film, resulting in the production of C^{14} and a recoil proton, according to the reaction ${}_7N^{14}(n,p){}_6C^{14}$. Thus the fast-neutron flux is

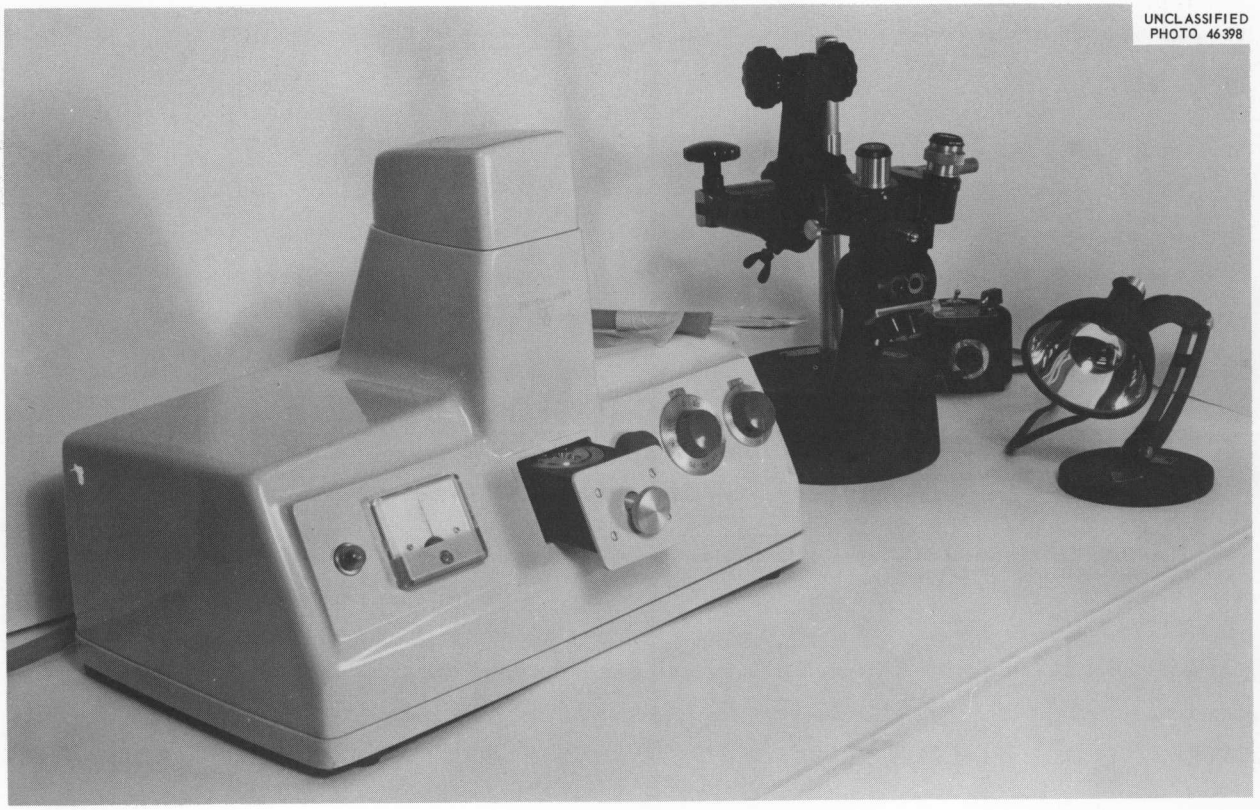

Fig. 3.6. Bausch & Lomb Microdosimeter Reader and Glass-Rod-Inspection Equipment.

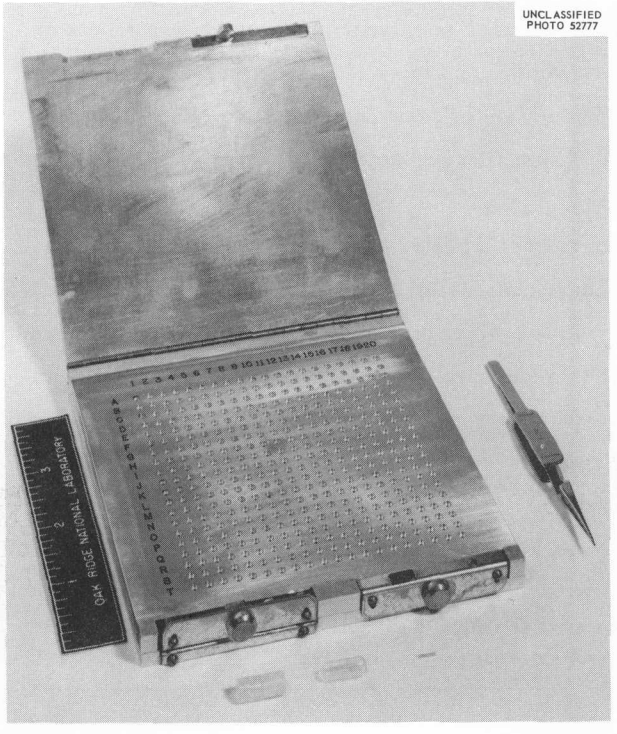

Fig. 3.7. Silver Metaphosphate Glass Handling Equipment.

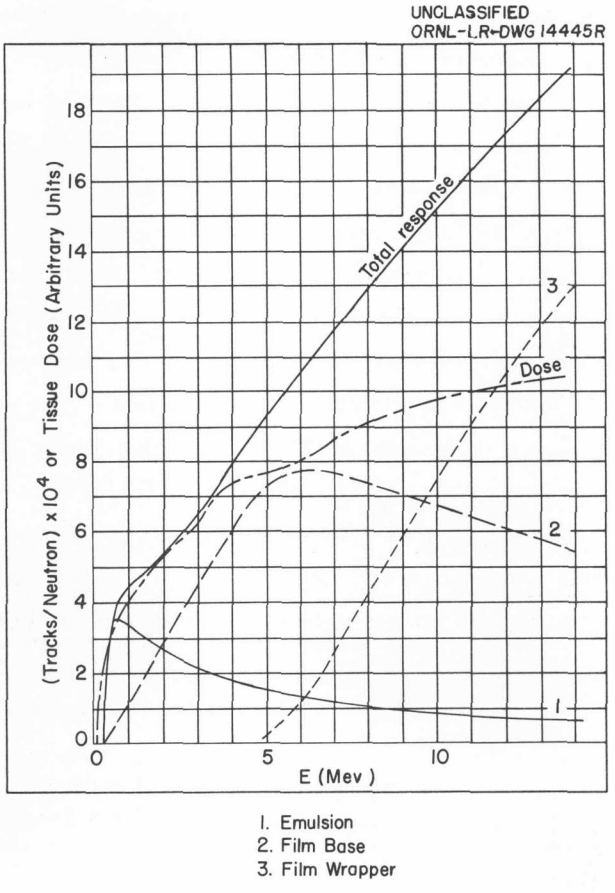

Fig. 3.8. Response of Eastman NTA Film to Neutrons.

proportional to the number of proton tracks in the film behind the cadmium-gold-cadmium shield, and the thermal-neutron flux is proportional to the difference in the number of proton tracks in the portion of the film at the open window and the portion behind the cadmium-gold-cadmium shield.

The measurement of neutron flux is not a measure of dose since dose per neutron is a function of energy. Based on tissue composition and the probable histories of neutrons of several specific energies, Snyder and Neufeld[9] of ORNL have calculated total or multiple collision dose per neutron incident normally on a body. The values obtained by Snyder and Neufeld are used to determine Maximum Permissible Exposure (MPE). However, since a film badge meter is worn next to the body so that reflected neutrons again impinge on the film, a first-collision dose curve will give a better measure of the body dose. Such a curve was calculated on the basis of published cross sections, and, in general, its magnitude is about two-thirds the total dose.

As observed in the Eastman type A packet (Fig. 3.8), the total-response curve corresponds to the dose curve up to about 4 Mev, beyond which it becomes increasingly too high until at 14 Mev it is approximately

[9] "Protection Against Neutron Radiation Up to 30 Million Electron Volts," *NBS Handbook 63.*

twice as high as the dose curve. Cheka[10] demonstrated that by replacing the black paper between the film and wrapper with a 85 mg/cm^2 aluminum foil (Table 3.3), the film response will be proportional to the dose up to approximately 14 Mev (Fig. 3.9).

Whereas the fading of the latent image is very slight for beta-gamma monitoring films, the NTA emulsions are fairly unstable unless they are packaged in a moisture-proof wrapper. The rate of deterioration is a function of temperature and humidity. The effect on track population of three different sets of storage conditions between exposure and development is shown in Fig. 3.10. As indicated by line II of Fig. 3.11, film sealed in "pouch paper" (a three-layer lamination of paper, aluminum foil, and plastic) shows a loss of only about 5% of the tracks in 60 days. Thus, film packaged this way may be processed on a monthly (or longer) cycle with no appreciable track loss.

The average permissible exposure rate to fast neutrons over a period of one week, 100 mrem/week, produces approximately 1000 recognizable tracks per square centimeter. The figure for thermal neutrons is almost the same. Considering the small size of the developed silver grains (a few tenths of a micron) and the fact that tracks down to three grains are counted, it is necessary to use high magnification and dark-field illumination. At 950× the area of one field is 2×10^{-4} cm^2, and consequently a maximum permissible exposure rate for one week produces approximately 0.2 track per field.

---

[10] J. S. Cheka, *Neutron Monitoring by Means of Nuclear Track Film (NTA)*, ORNL-547 (1950).

Table 3.3. Laminations of Hydrogenous Material and Aluminum Foil Around NTA Film to Adjust Track Response to Fast-Neutron Tissue Dose

Material	Thickness (mg/cm^2)	Energy of Proton Whose Range Equals Cumulative Thickness of Material to Emulsion (Mev)
Cellulose (or front film)	≧76	≧14
Aluminum	85	11.05
Cellulose	24.2	8.0
Cellulose (film wrapper)[a]	10.3	6.6
Aluminum[a]	27	5.9
Film Base[a]	28.5	4.37
Emulsion[a]		
Blank Film[a]	28.5	4.37
Aluminum[a]	27	5.9
Cellulose (film wrapper)[a]	10.3	6.6
Cellulose	24.2	8.0
Aluminum	85	11.05
Cellulose	≧76	≧14

[a] These constituents are present in the packet as supplied by the manufacturer.

ORNL-LR-DWG. 14447
UNCLASSIFIED

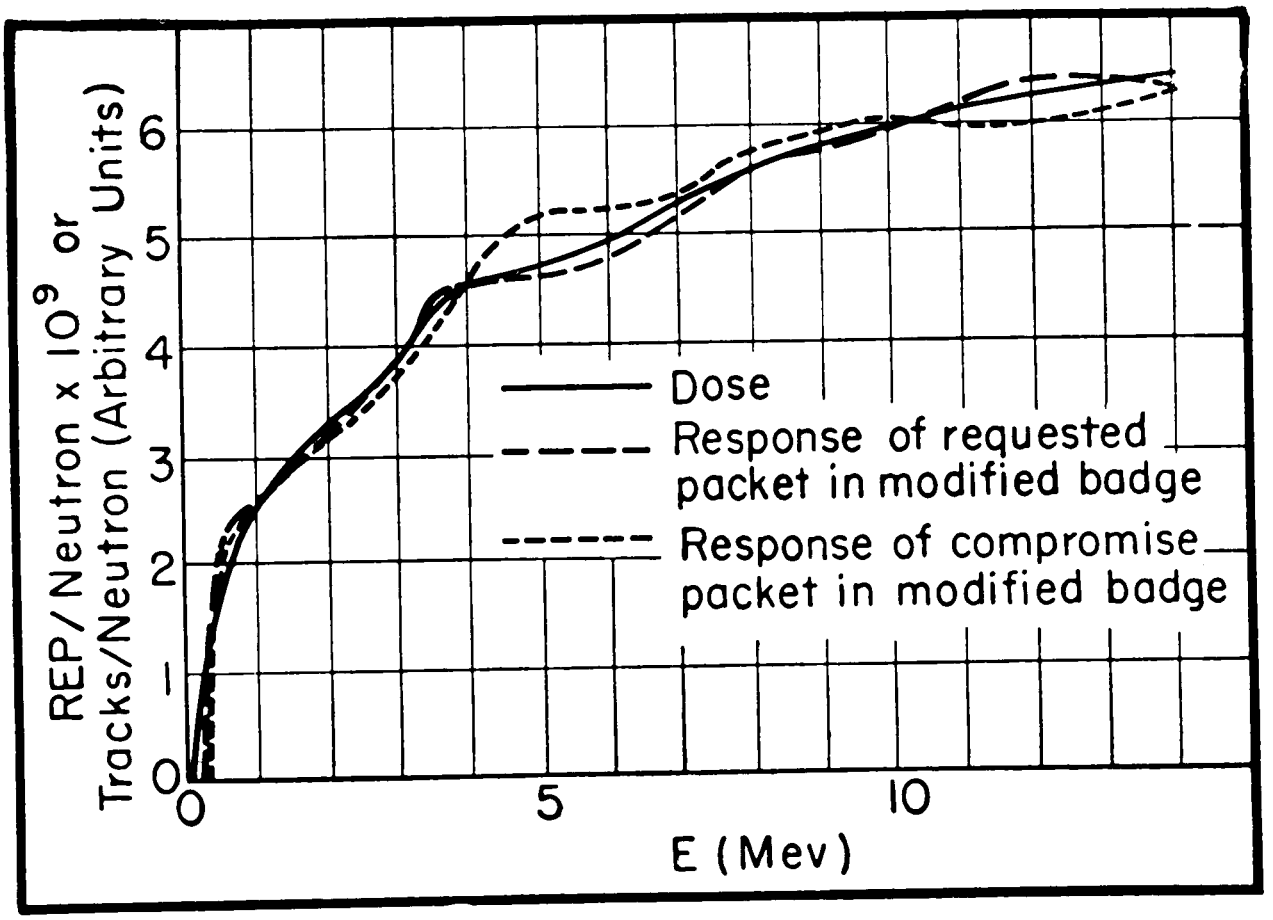

Fig. 3.9. Film Response to Calculated First-Collision Dose.

3.5.2 Criticality

The use of elemental "foils" in model II of the ORNL badge meter depends for accurate dosimetry on concurrent use with the Hurst threshold detector system.[11] As shown in Fig. 3.2, these "foils" include a 0.5-g pellet of sulfur and two 0.005-in.-thick by $\frac{7}{16}$-in.-diam gold foils. The so-called bare gold foil is inserted in the cavity behind the sulfur. The other gold foil is the gold component of the cadmium-gold-cadmium sandwich filter described previously. When bombarded by neutrons, the foils show a response which can be related to dose through the use of relatively simple counting techniques.[11] Thermal-neutron response is determined from the gold foils; high-energy (> 2.5 Mev) neutron response is determined from the sulfur. Exposure to intermediate-energy neutrons is determined by referring the data from the badge to that from dosimeter stations in the vicinity of the badge wearer or by fitting the data from the badge to the

---

[11] G. S. Hurst and R. H. Ritchie, *Radiation Accidents: Dosimetric Aspects of Neutron and Gamma-Ray Exposures*, ORNL-2748 (1959).

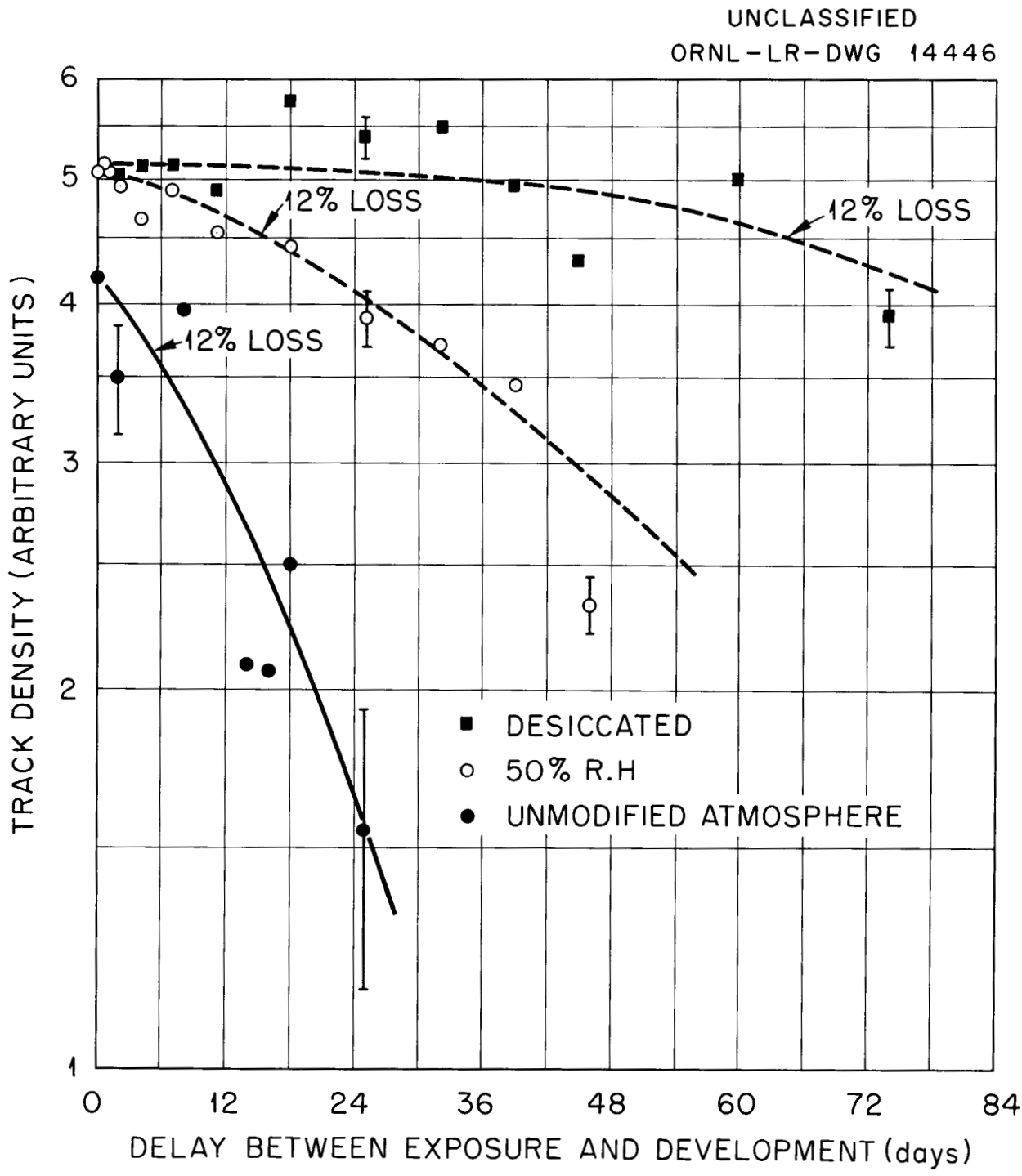

Fig. 3.10. Effect of Relative Humidity on Latent-Image Stability.

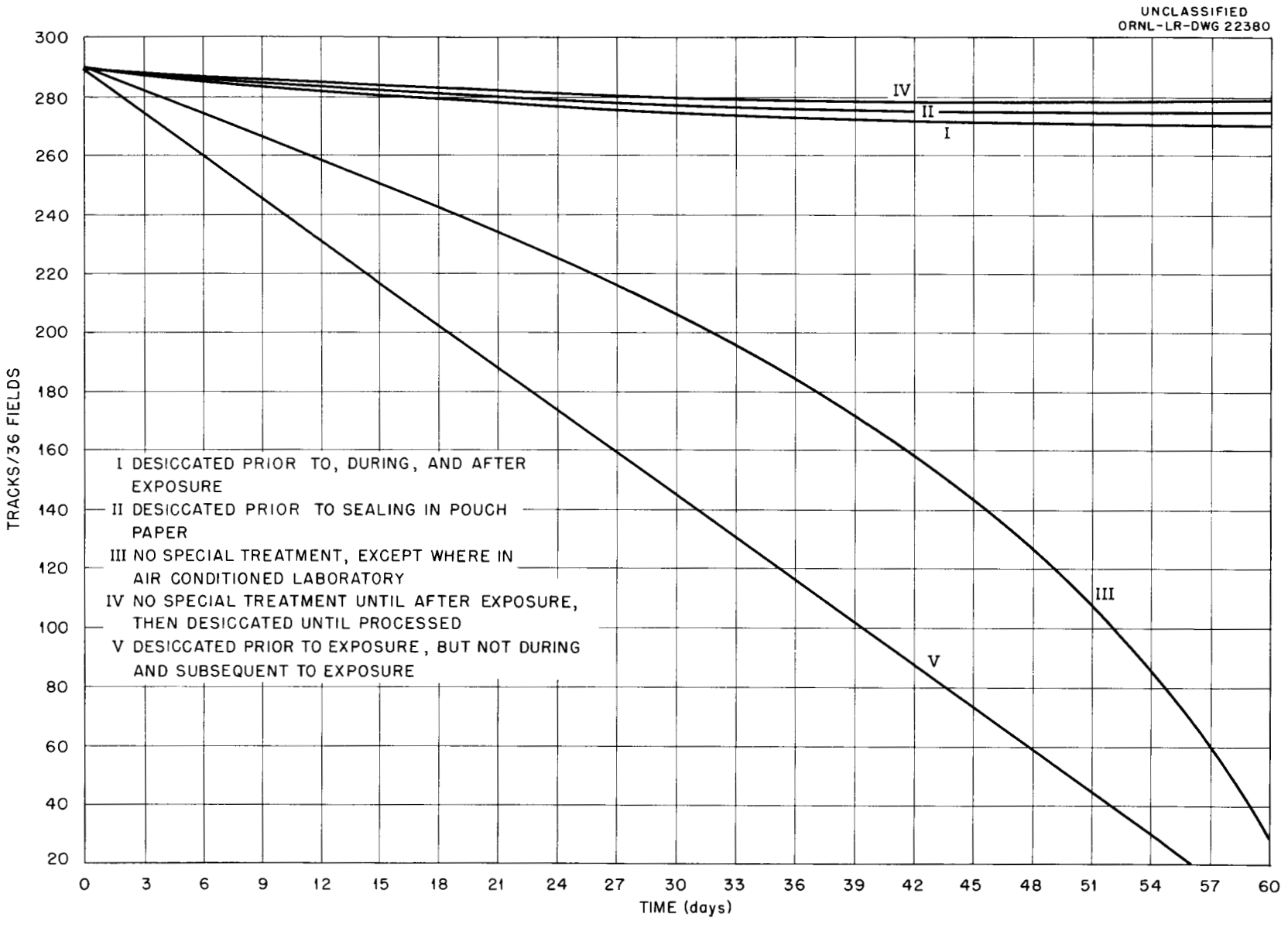

Fig. 3.11. Effect of Sealing Neutron Film in Moisture-Proof Paper.

spectrum at the point of exposure, if such is known. In effect, the badge allows for a determination of a "point-in-space" dose, where the point in space represents the "effective" position of the person wearing the badge. The dose to the person can then be calculated when the orientation of the badge and the person is known with respect to the source of radiation. Thus, if orientation factors are resolved, and if the badge accompanies the person throughout the exposure interval, the dose received by the badge is indicative of that received by the person. One solution to the orientation problem includes the use of a dosimeter belt which contains a series of beta, gamma, and neutron detectors spaced at intervals about the midsection of the wearer. Other methods include techniques involving activation analysis of samples of hair removed from portions of the body, pieces of jewelry, buttons, pencil clips, and other substances which might be carried by the exposed individual. Even though these latter techniques are useful and in many cases adequate, the resolution of the orientation problem, where the gamma dose is a prominent factor, lies with the use of multiple detectors spaced over the body, as is provided in the dosimeter-belt concept.

Immediately after a nuclear accident those persons who may have received significant exposure to neutrons may be identified easily by a simple measurement of the radiation which has been induced in the indium foil in the badge. (Indium-115, which constitutes 96% of that occurring naturally in nature, has a thermal-neutron activation cross section of 155 barns with a half-life of 54 min for the resultant In^{166}.)[12] Table 3.4 is a listing of resultant dose-rate readings obtained after exposing badges to fast and thermal neutrons in the west animal tunnel of the ORNL Graphite Reactor and to thermal neutrons in the thermal column of the same reactor. The activated gold foil also serves to identify the persons exposed to neutrons. Although gold is less sensitive than indium to neutron activation, it is a valuable complement since it has a much longer half-life than the indium.

[12] *Neutron Cross Section*, AECU-2040 (1952).

Table 3.4. Neutron Activation of the ORNL Film Badge

Neutron Exposure	Instrument Reading in Radium Equivalent mr/hr When in "Contact" with Badge (hours after exposure as indicated)			
	0.5	2	3	6
10^{11} thermal neutrons/cm^2 (thermal column of ORNL Graphite Reactor)	150[a]	40[a]	20[b]	3[b]
100 rads fast-neutron dose + 10^{11} thermal neutrons/cm^2 (west animal tunnel of ORNL Graphite Reactor)	220[a]	70[a]	20[b]	5[b]
10^{9} thermal neutrons/cm^2 (thermal column of ORNL Graphite Reactor)	12[b]	3[b]		

[a] Readings taken with ORNL Cutie Pie in "contact" with badge.

[b] Readings taken with Victoreen 389C probe in "contact" with badge, shield closed. The shield open to shield closed reading ratio was 2 to 1.

3.6 SUMMARY OF ORNL FILM-DOSIMETRY EXPERIMENTS

3.6.1 Dose Range of Film

The sensitivity of several commercial emulsions was measured using the film-calibration apparatus (Fig. 3.12) which contains two radium-gamma sources, one containing 98 mg and the other 500 mg. The sources are rapidly positioned by means of a vacuum pump. Each source is contained in an aluminum can and is enclosed in a plastic tube at the time of exposure. One-half centimeter of plastic in front of the film ensures electronic equilibrium for the radium exposure. Behind the film, 5 cm of plastic simulates back-scatter conditions that would prevail in a personal exposure being monitored by the film badge.

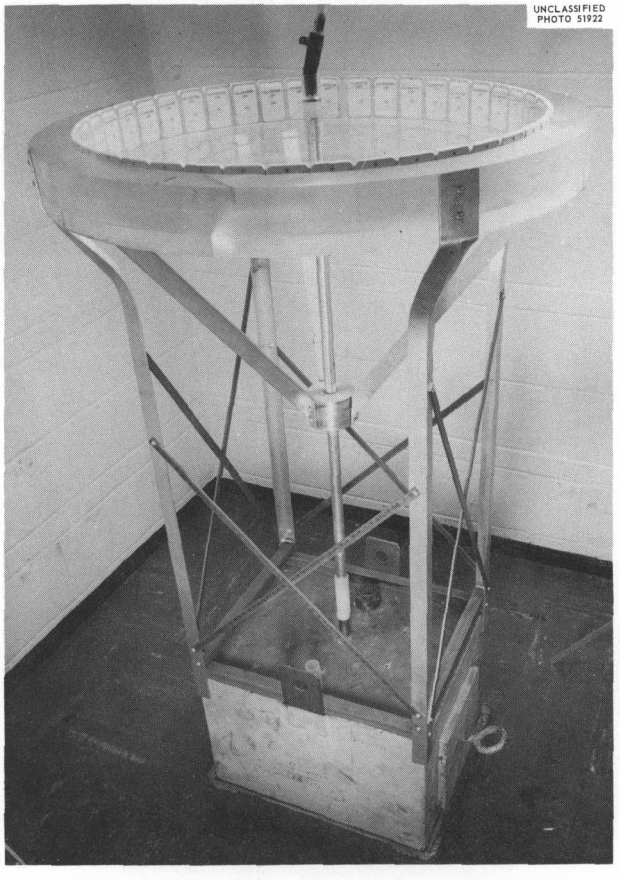

Fig. 3.12. Radium-Gamma Calibration Ring.

A comparison of sensitivity of the low-range emulsions considered is offered in Fig. 3.13 and of the high-range emulsions in Fig. 3.14. The upper limit of an emulsion range is determined by the dose at which a density of 2.0 is produced. At this density the film transmits only 1% of the incident visible light. The emulsions for the ORNL film dosimeter, Du Pont 555 and 834, were chosen to cover the desired range of doses without exceeding a density of 2.0. The 555 emulsion range covers 50 mrads to 5 rads between density limits of 0.04 and 2.0. The range of the 834 emulsion is 5 to 150 rads for densities of 0.10 and 2.0

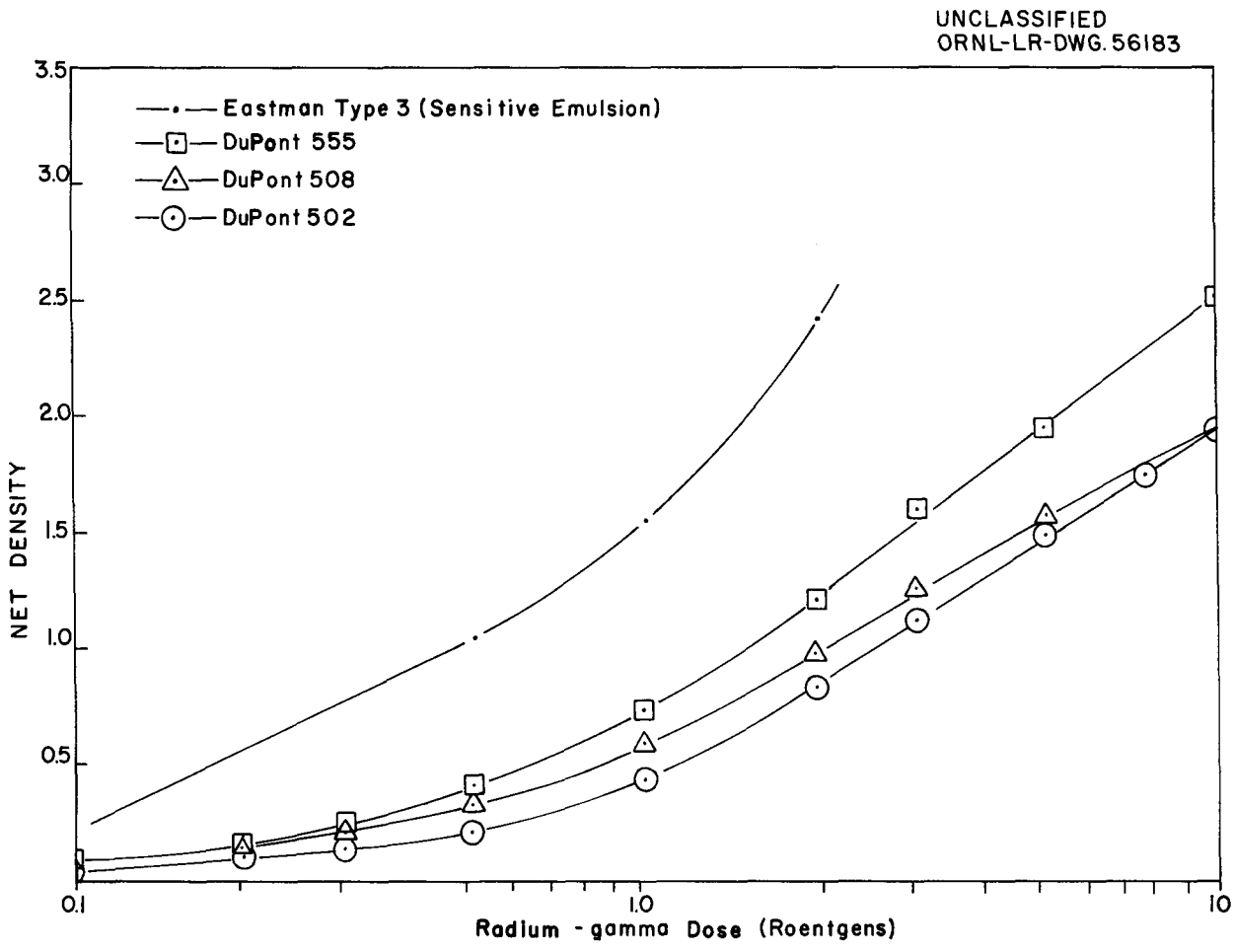

Fig. 3.13. Radium Calibration of Low-Range Emulsions.

respectively. Customarily the film is not used as the primary dosimeter above 100 rads; the silver metaphosphate glass is considered primary above 100 rads.

3.6.2 Photon-Energy Response of Film

The response of the aforementioned emulsions to x rays in the 20- to 200-kev range was determined by using a modified Westinghouse Quadrocondex x-ray machine. By using standard NBS filters, the energy spectrum of the x rays was narrowed, and the exposure energies reported are effective energies as determined by Villforth *et al.*,[13] who described the filtered spectrum for this machine. (The effective energy of a heterochromatic x-ray beam is the energy of a monochromatic beam which has the same absorption coefficient as a given beam in an incremental thickness of standard filter material.) It was impractical to narrow

[13] J. C. Villforth, R. D. Birkhoff, and H. H. Hubbell, Jr., *Comparison of Theoretical and Experimental Filtered X-Ray Spectra*, ORNL-2529 (1958).

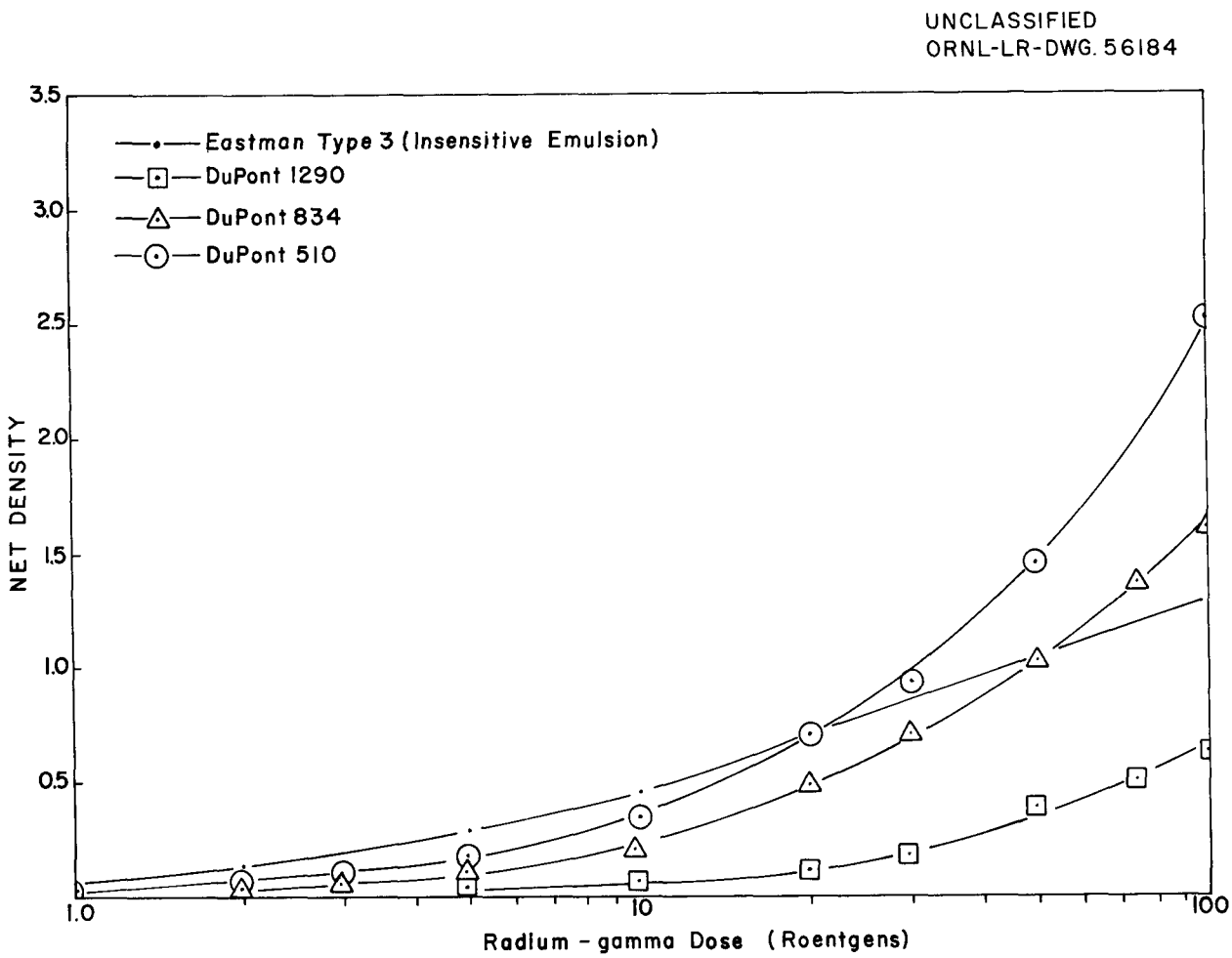

Fig. 3.14. Radium Calibration of High-Range Emulsions.

the x-ray spectrum sufficiently to produce ideal monoenergetic conditions because of the long exposure time that would be required to expose the large number of films involved. Therefore, this information should not be construed as the real energy response of an emulsion, but it gives the comparative relative energy responses of the emulsion tested. Exposure field mapping showed a uniformity within ±2% over an area sufficient to expose four badges simultaneously. Two similar emulsions were used per exposure. The exposure dose rates were measured with a 25-r Victoreen condenser r-meter. Figures 3.15 through 3.22 show the results of these exposures for the various filters in the badge when normalized to the response for Co^{60} gamma rays. The nonlinearity of the dose-vs-density curve for film was taken into account by comparing each density to a Co^{60} calibration curve to get the apparent dose, and then a ratio of the apparent dose to the exposure dose gave the relative response.

In the case of Du Pont 555 emulsion, measurements were made to verify the energy response to more nearly monoenergetic radiation. This was done using the 250-kev x-ray machine and radiators to produce

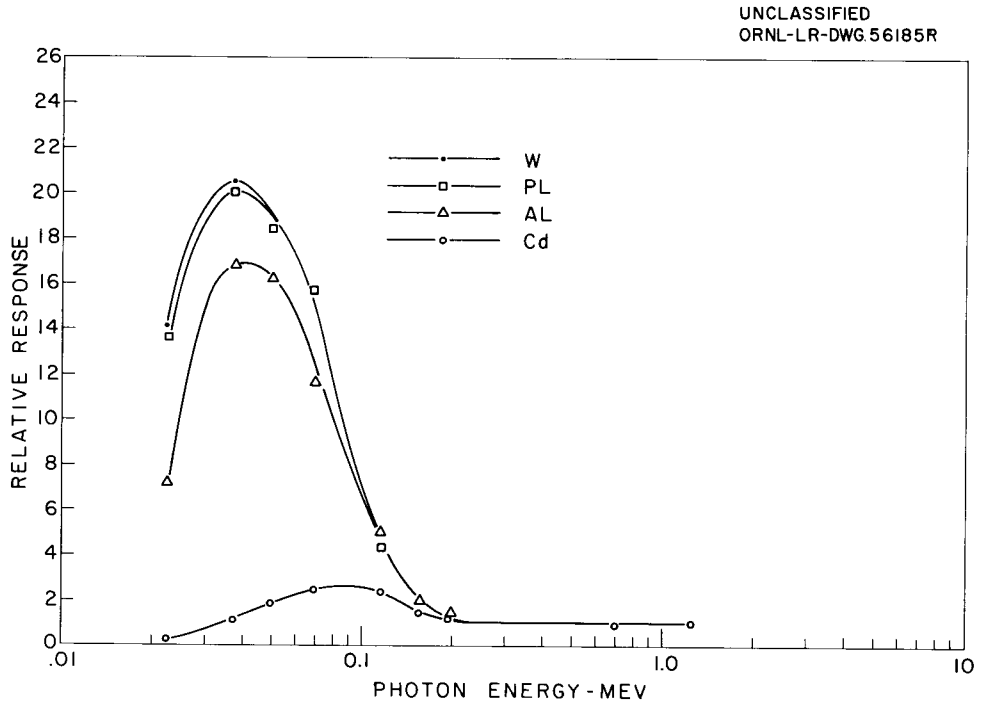

Fig. 3.15. Relative Response of the Du Pont 502 Emulsion Irradiated in the Badge Dosimeter.

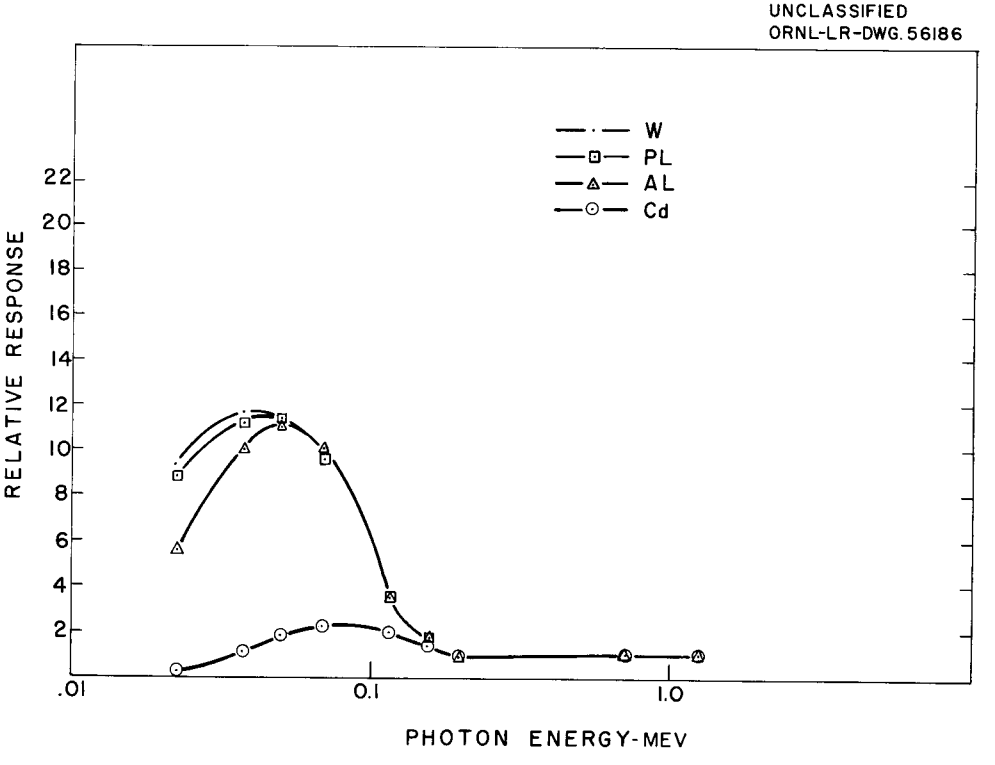

Fig. 3.16. Relative Response of the Du Pont 508 Emulsion Irradiated in the Badge Dosimeter.

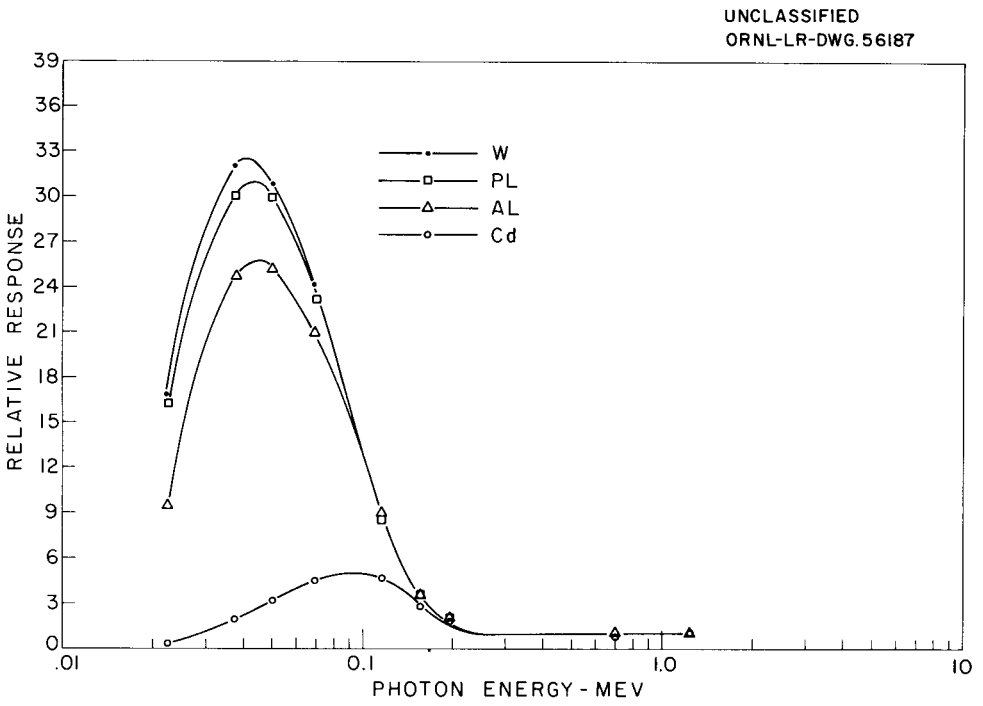

Fig. 3.17. Relative Response of the Du Pont 510 Emulsion Irradiated in the Badge Dosimeter.

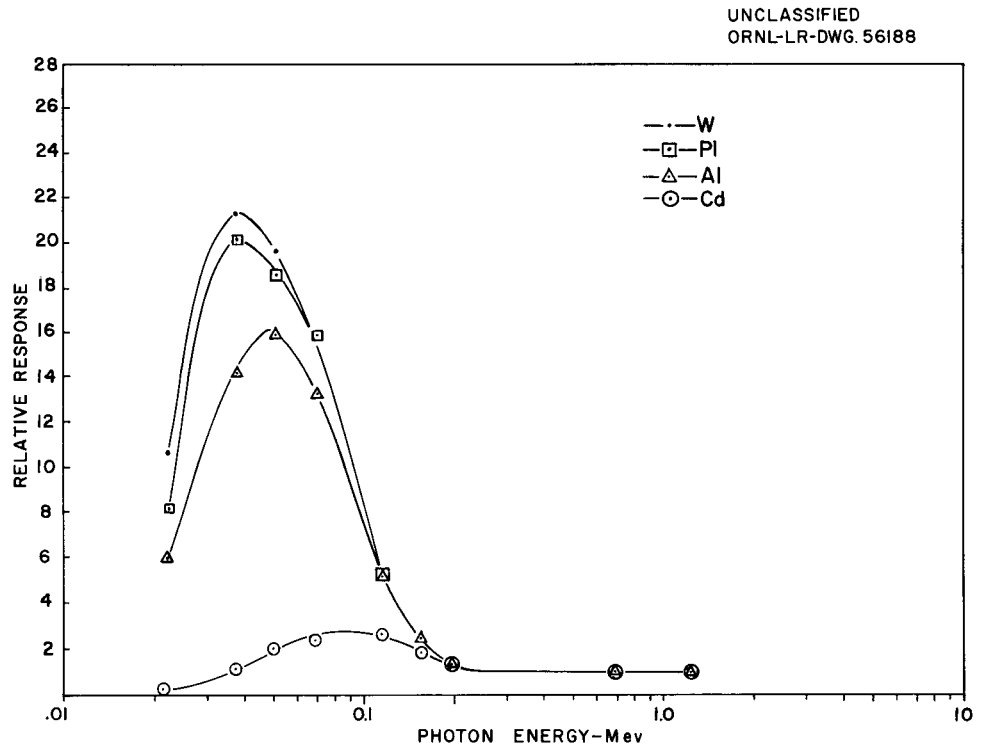

Fig. 3.18. Relative Response of the Du Pont 555 Emulsion Irradiated in the Badge Dosimeter.

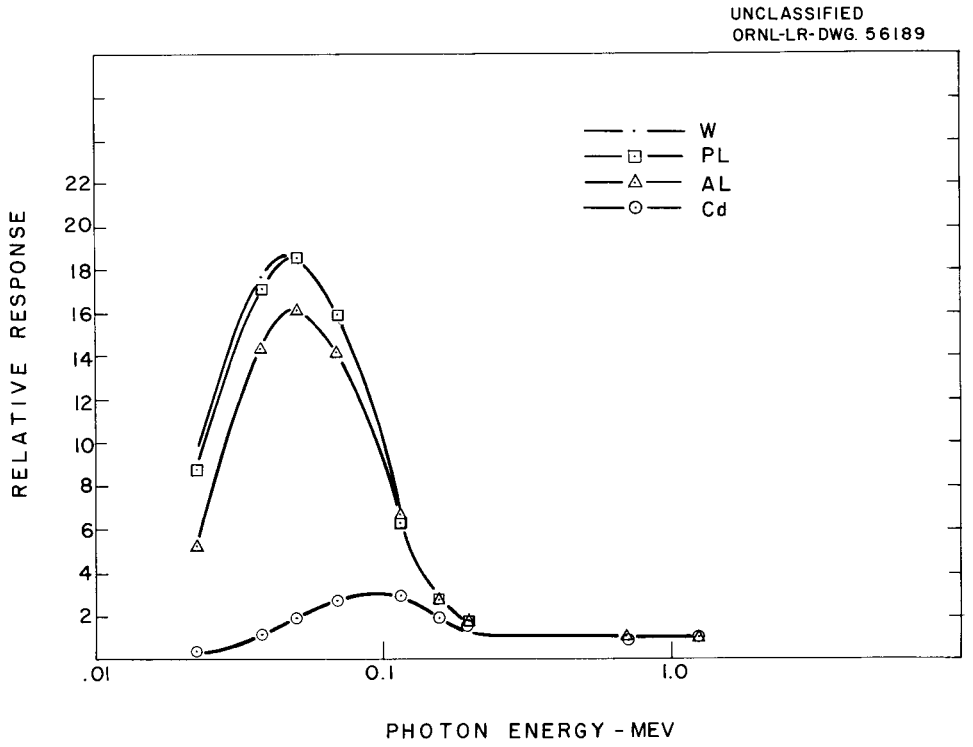

Fig. 3.19. Relative Response of the Du Pont 834 Emulsion Irradiated in the Badge Dosimeter.

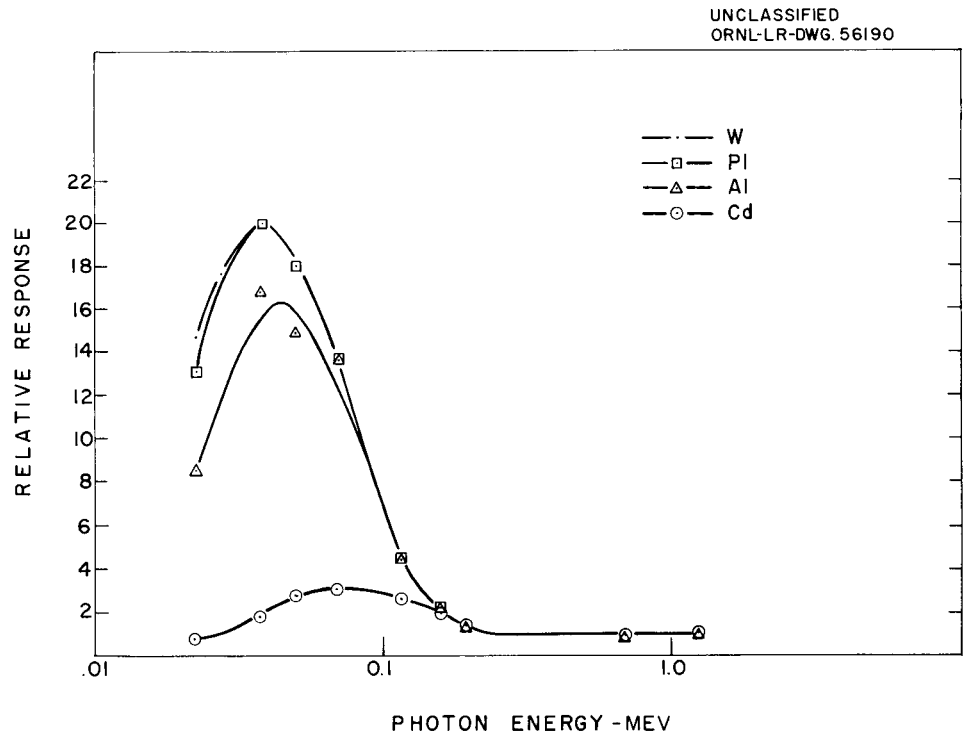

Fig. 3.20. Relative Response of the Du Pont 1290 Emulsion Irradiated in the Badge Dosimeter.

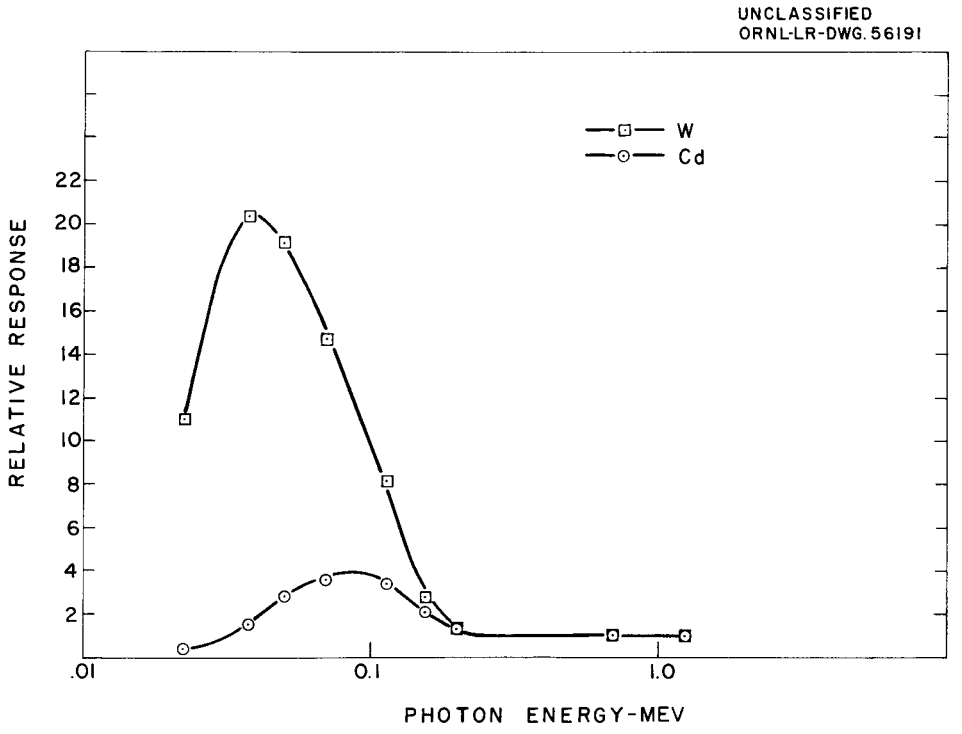

Fig. 3.21. Relative Response of the Eastman Type 3 Emulsion (Sensitive) Irradiated in the Badge Dosimeter.

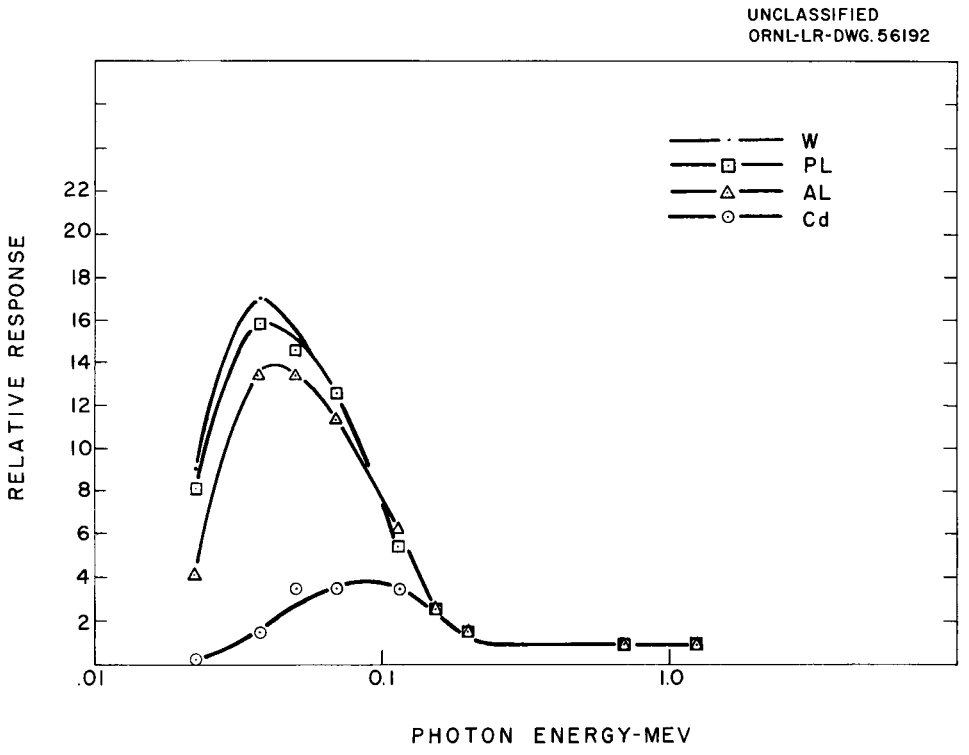

Fig. 3.22. Relative Response of the Eastman Type 3 Emulsion (Insensitive) Irradiated in the Badge Dosimeter.

fluorescence radiation in a manner similar to that described by Seemann.[14] The choice of radiators was made so as to provide fluorescence of an energy which would bracket the energy where the film emulsion was most sensitive. This energy was assumed to be the *K*-absorption edge of silver, 25.5 kev. Table 3.5 shows the radiators and filters used and the photon energies achieved. Villforth *et al.*[13] describe the fluorescence spectra of these radiators in greater detail. The filters were chosen to attenuate the K_β emission to 10% of its original intensity, while attenuating the K_α component relatively little. The response of the 555 emulsion at the fluorescence x-ray energies was normalized to that for Co^{60} in the manner previously described. Exposure to Co^{60} was made by using an NBS calibrated source and geometry similar to that for the x-ray exposures. All exposures were monitored by a 250-mr Victoreen condenser r-meter to which all film doses were related. The doses as measured by the Victoreen were corrected for the attenuation by the film packet. This varied from 48% at 17.4 kv to 7% at 66.2 kv. No correction was made for the energy dependence of the 250-mr Victoreen. The relative response of the 555 emulsion is illustrated in Fig. 3.23. The choice of x-ray energies showed the marked effect of the *K*-edge of silver on the film sensitivity. Extrapolation of the response to the discontinuity at 25.5 kev puts the peak response at 35 times the Co^{60} response. The extrapolated portions of the curve are shown as broken lines.

3.6.3 Beta-to-Gamma Response

For many years uranium-beta as well as radium-gamma calibration curves were used at ORNL to interpret densities. It was noticed that the ratio of the open-window uranium beta response to the cadmium-shielded radium-gamma response was a constant within the linear range of the film. The ratio of beta to gamma response was tested by the following experiments: (1) film wrapped in a 7 mg/cm^2 absorber and placed in contact with a slab of normal uranium produced a density of 0.52 per rad, compared with 0.50 per rad of radium gamma measured behind the cadmium filter, and (2) a stack of film packets was given a dose of 5 rads from a normal uranium surface, and the densities produced at various depths were used to extrapolate to a "surface" (7 mg/cm^2) density value of 1.68. A corresponding 5-rad dose from radium produced a density of 1.71 under the cadmium filter. It appears, therefore, that for betas from normal uranium, the density produced per rad in film is equal to the density produced under the cadmium filter per rad in film by radium gamma.

Poddar[15] has reported that the density per unit dose produced by various beta emitters is a function of the specific ionization and the average energy of the betas, that is,

$$\text{Density} = \frac{Q(\text{electrons/cm})}{E(\text{Mev})},$$

and that the density per unit dose varies slowly with the average beta energy over a fairly wide range. Hence, in its application for routine personnel dosimetry, film is considered equally sensitive for beta and gamma radiations.

---

[14] H. E. Seemann, *Rev. Sci. Instr.* **21**(4), 314 (1950).

[15] R. K. Poddar, *Indian J. Phys.* **29**(4), (1955).

Table 3.5. Parameters for Measurement of Response of Du Pont 555 Emulsion

Applied Voltage (kv)	Radiator	Filter	Photon Energy (kev)	Dose Rate (mr/min)
50	Mo	Zr, 31 mg/cm^2	17.4	20.1
50	Sn	Cd, 65 mg/cm^2	25.2	10.5
50	$Ce(NO_3)_3$	$BaCO_3$, 100 mg/cm^2	34.6	1.83
150	Pt	W, 287 mg/cm^2	66.2	7.6
Co^{60}			1250	14.5

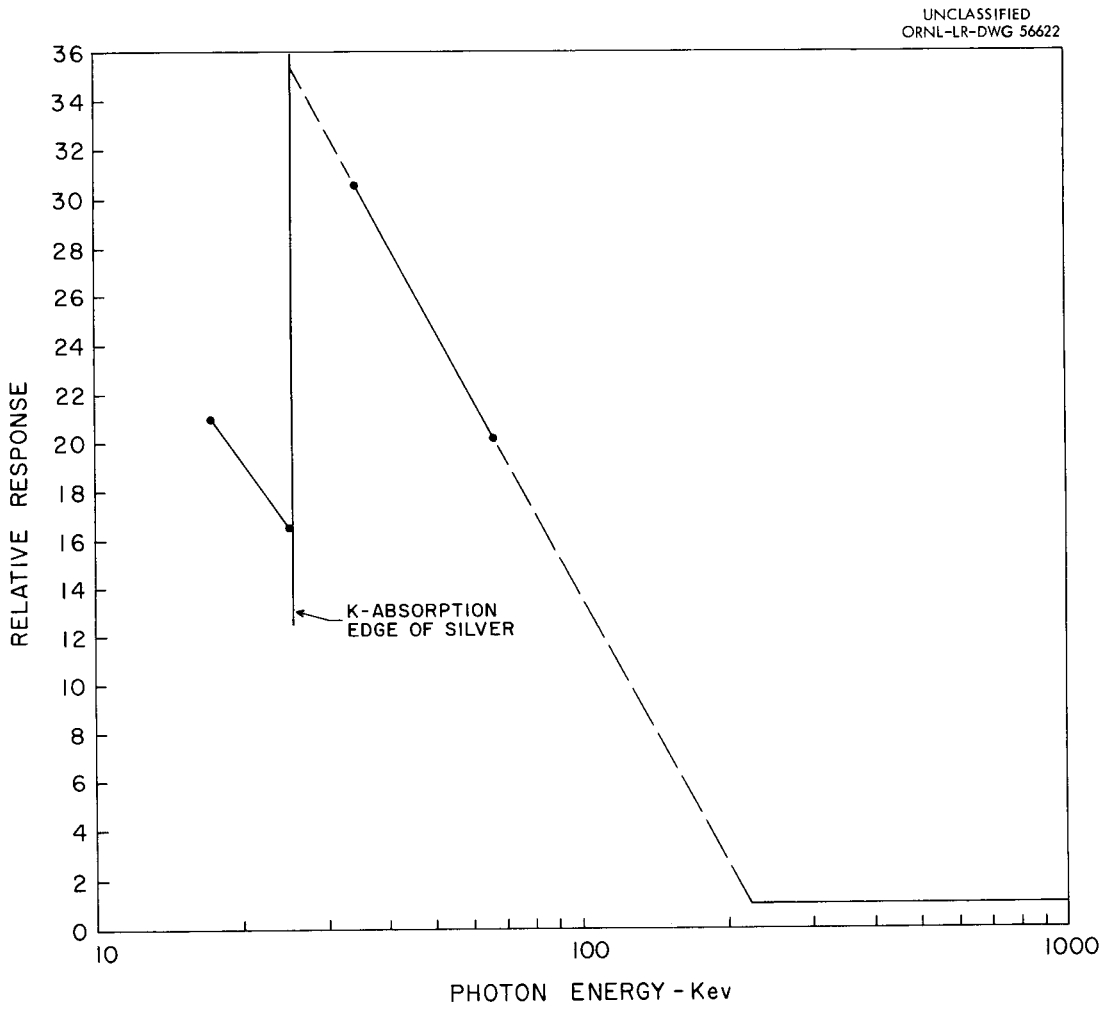

Fig. 3.23. Relative Response of the Du Pont 555 Emulsion When Irradiated with Fluorescence X Rays.

3.6.4 Intensification of Film Blackening with Metallic Filters

Since the meaning of blackening on a film is ambiguous without a knowledge of the type and approximate energy of the radiation producing it, one must have a system of filters in a film dosimeter. The necessary proximity of these filters gives rise to blackening on the film which does not always signify an exposure dose.

With the use of radiation sources, as described above, and metallic filters representing a wide range of atomic numbers, film was exposed in order to study this effect. The cases shown in Fig. 3.24 illustrate the experimental arrangements used to demonstrate these effects. The radium-gamma source used was enclosed in 860 mg/cm^2 of aluminum and 300 mg/cm^2 of lucite. Table 3.6 shows the densities found using various filters. The following information should be considered in applying heavy-metal filters in film dosimetry:

Case IA. – The metal filters reduce the gamma radiation by functioning as absorbers. Most if not all the electrons forescattered from the metals are absorbed in the 110 mg/cm^2 of plastic and film wrapper between the metal and the film.

Case IB. – The absorbing effect of the filters is the same as for Case I*A*, but the electrons backscattered from the metals are not all absorbed in the 30 mg/cm^2 film wrapper, with the result that the effect of backscatter is equal to or greater than that of the incident filtration. Such exposures with only cadmium filters could be misinterpreted to involve thermal neutrons.

Case IIA. – This case is similar to Case I*A*, except that the absorber between the metals and the film is 30 instead of 110 mg/cm^2. The 5% increase in film density under the lead filter over that for Case I*A* is probably a real indication of the effect of forescattered electrons. Since the plastic between the cadmium or the copper and film makes no difference in the film density, it would appear that these lower-atomic-number metals do not contribute significant electron forescatter capable of penetrating the 30 mg/cm^2 wrapper.

Case IIB. – The differences in the film densities of the respective filters in Cases I*B* and II*B* indicate the increase in backscatter with the atomic number of the backscatterer.

Case III. – With no incident filtration and only 30 mg/cm^2 of absorber between the metal and the film, the backscatter increases the dose to the film up to 33% for a lead backscatterer.

Case IV. – Almost all backscatter is absorbed in the 110 mg/cm^2 layer of plastic and wrapper between the backscatterer and the film.

3.6.5 Latent Image Stability of Beta-Gamma Film

Three tests have been devised to determine the stability of the beta-gamma emulsions which are commercially available. A description of these and a summary of the results follow.

Sensitive Emulsions. – Exposures of the Du Pont 502, 508, and 555 and the Eastman type 3 (sensitive) emulsions were made for four months. The magnitude of the exposures was 1 r of radium gamma radiation, and the frequency of exposure increased as the time for development approached. All films were developed simultaneously and read on the same Ansco densitometer. Figure 3.25 shows the results obtained. The

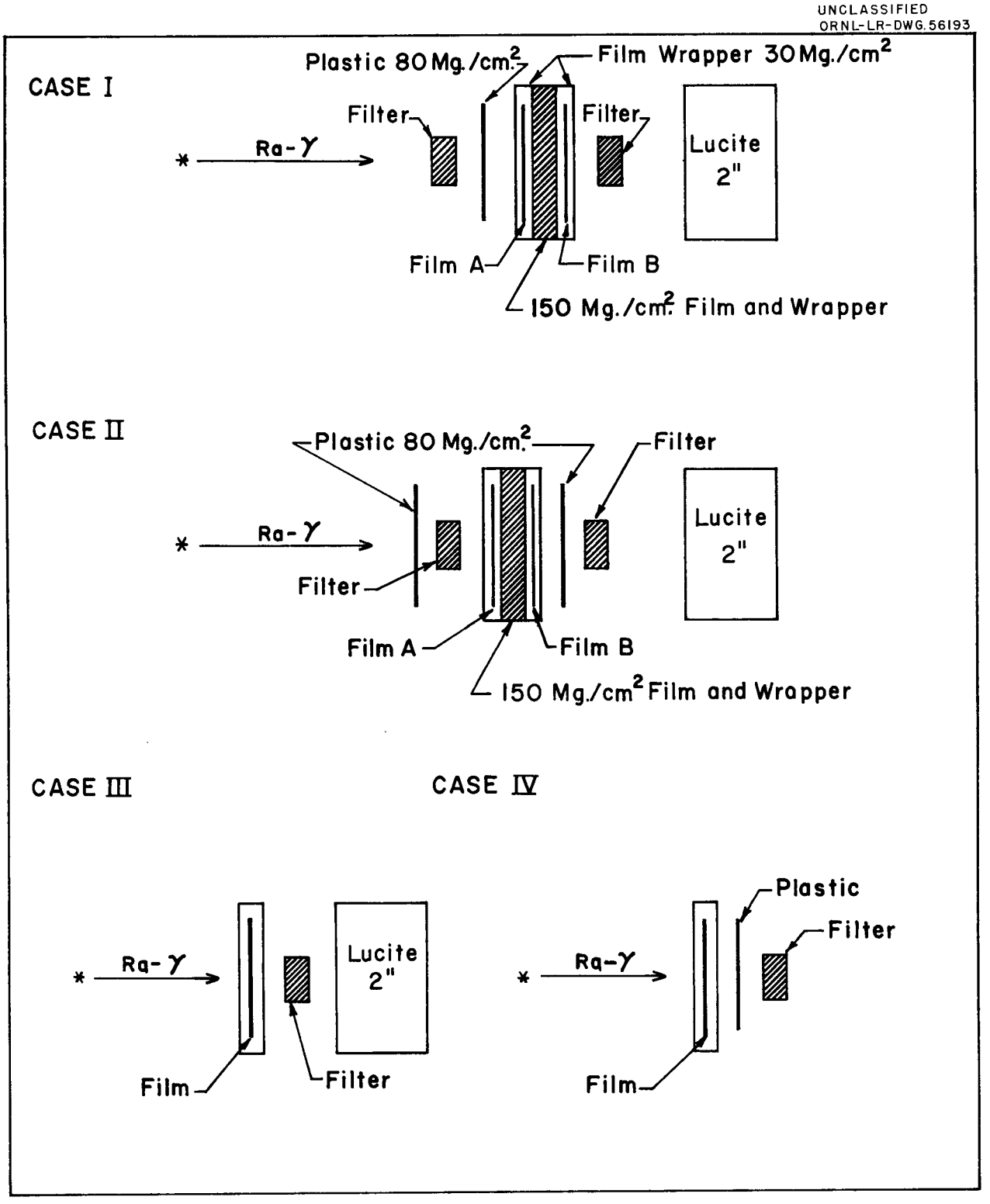

Fig. 3.24. Film and Filter Orientations.

Table 3.6. Relative Photographic Densitities of Emulsions When Various Filters are Used

Film No.	Filter			
	None	Lead, 0.020 in.	Cadmium, 0.030 in.	Copper, 0.040 in.
IA	1.00	0.75	0.71	0.75
IB	1.00	1.12	1.04	1.00
IIA	1.00	0.79	0.71	0.75
IIB	1.00	0.91	0.86	0.91
III	1.00	1.33	1.19	1.09
IV	1.00	1.00	1.00	1.00

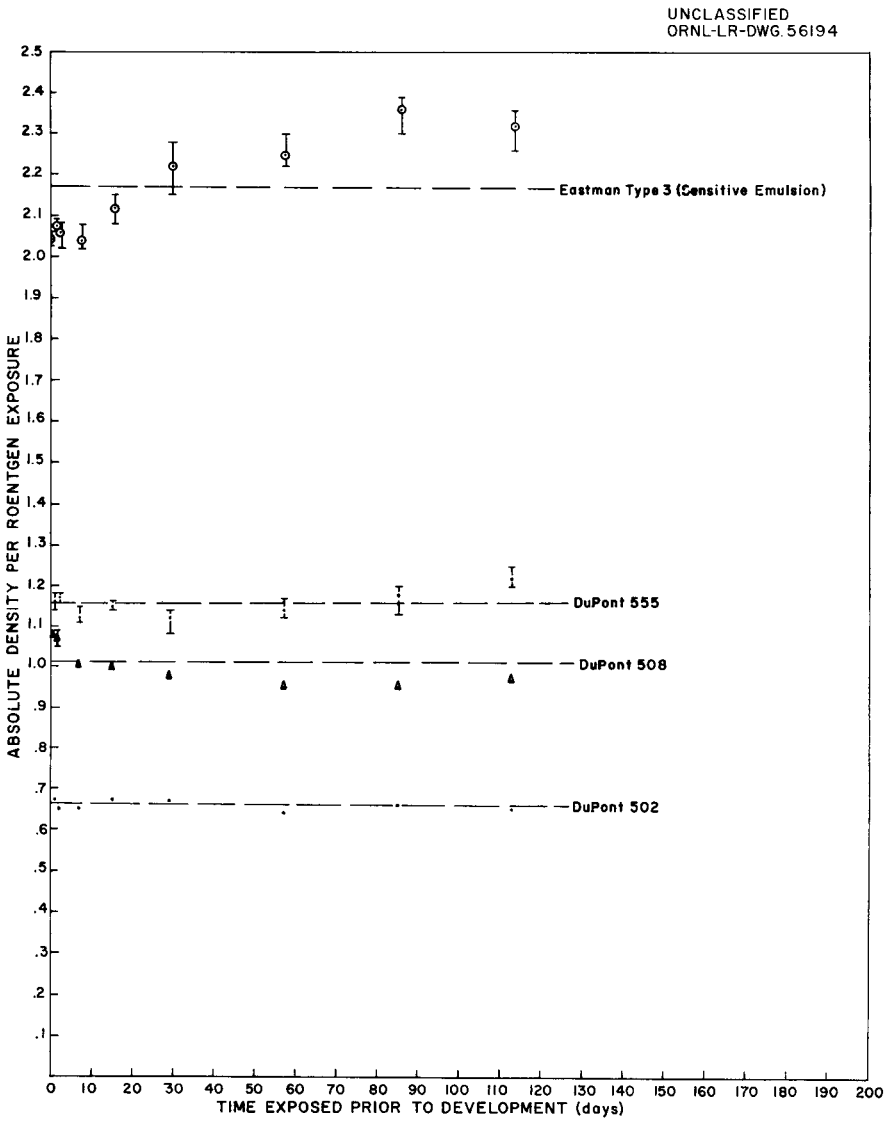

Fig. 3.25. Latent Image Stability of Various Sensitive Emulsions.

dashed line associated with each emulsion represents the average density of all its exposures. The total variation in the density per roentgen over this period will be assumed to be due to emulsion instability and reproduction of the exposure on the film ring (Fig. 3.12). The error limits represented show the spread in the readings of the four films used at each exposure.

For the Du Pont 502, 508, and 555 emulsions, the maximum variations from the average densities are 5, 15, and 9% respectively. For the Eastman type 3 emulsion (sensitive) the maximum variation is 15%. Of this about 2% is due to the nonreproducibility in the exposures. It will be noted from Fig. 3.25 that the density per exposure for the Eastman type 3 increased rather than faded with time. In the other emulsions, the fogging and fading effects seem to offset each other so that no obvious trend is seen.

Insensitive Emulsions. – This test is similar to the one mentioned above except that a 100-r exposure was given, and the duration of the test was one month instead of four months. Figure 3.26 shows the Eastman type 3 (insensitive) and the Du Pont 834 and 1290 to be very stable over this period of time. No emulsion showed greater than 2% variation.

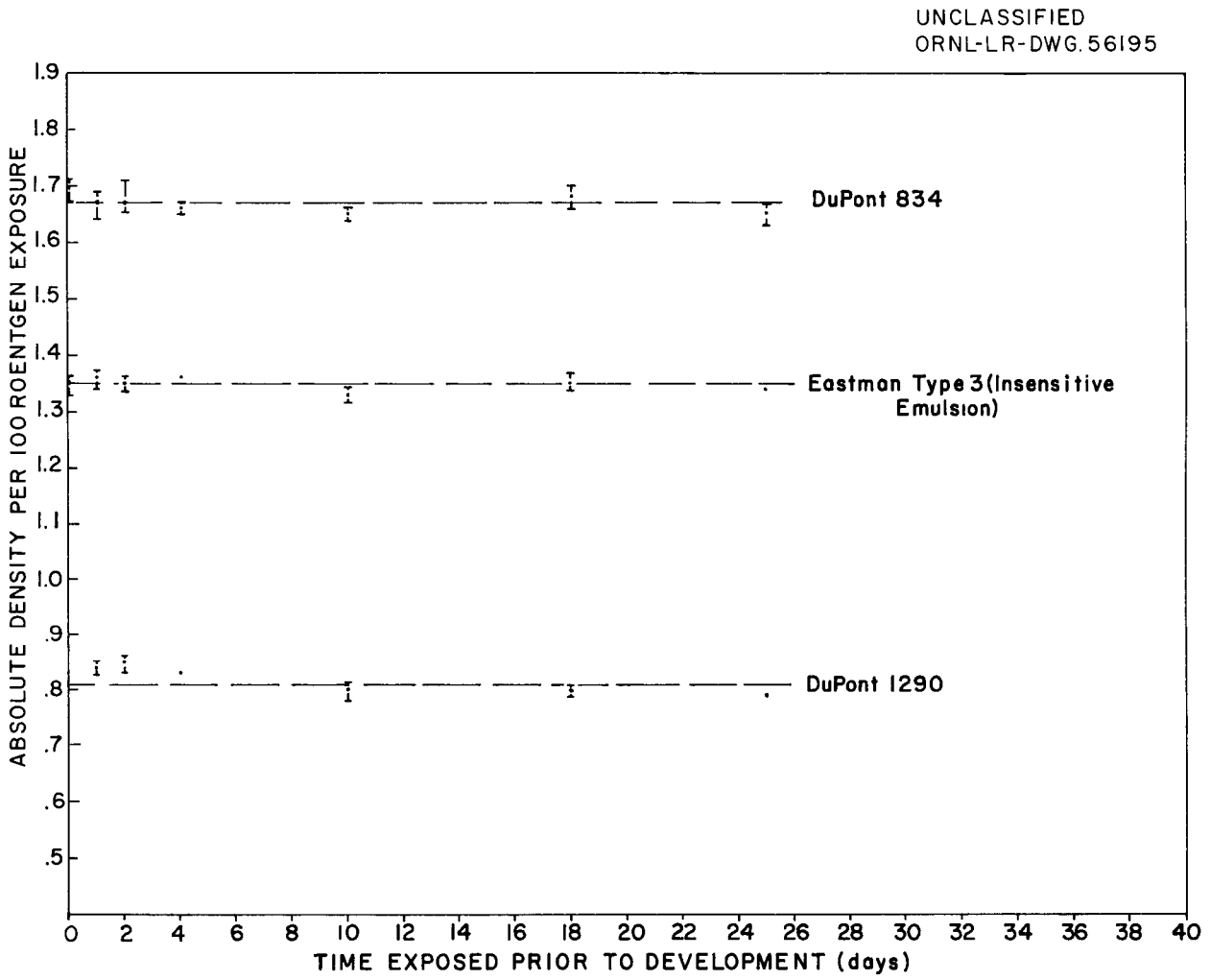

Fig. 3.26. Latent Image Stability of Various Insensitive Emulsions.

Integration Consistency. – The Du Pont 502 and 555 emulsions were each exposed to 10 mr/day for three months, and in each case the accumulated dose read from the film density agreed with the exposure dose within 5%. This experiment is continuing, and included in the study are 10 mr/day exposures of the glass rods to evaluate their use as a long-term integrator.

ORNL-332 (Third Edition)
UC-41 – Health and Safety
TID-4500 (19th ed. Rev.)

INTERNAL DISTRIBUTION

1. C. E. Larson
2. A. M. Weinberg
3. J. A. Swartout
4. W. H. Jordan
5–104. D. M. Davis
105. G. M. Fair (consultant)
106. J. C. Frye (consultant)
107. W. H. Langham (consultant)
108. E. P. Odum (consultant)
109. R. L. Platzman (consultant)
110. L. S. Taylor (consultant)
111–112. Central Research Library
113. Biology Library
114–115. ORNL – Y-12 Technical Library, Document Reference Section
116. Reactor Division Library
117–166. Laboratory Records Department
167. Laboratory Records, ORNL RC

EXTERNAL DISTRIBUTION

168. Research and Development Division, AEC, ORO
169–847. Given distribution as shown in TID-4500 under Health and Safety category (100 copies – OTS)