28

# OAK RIDGE NATIONAL LABORATORY

operated by

UNION CARBIDE CORPORATION

for the

U. S. ATOMIC ENERGY COMMISSION

ORNL-TM-546

# SPECIFICATIONS FOR FUEL ASSEMBLIES FOR CORE I OF THE EXPERIMENTAL GAS-COOLED REACTOR


**NOTICE**

This document contains information of a preliminary nature and was prepared primarily for internal use at the Oak Ridge National Laboratory. It is subject to revision or correction and therefore does not represent a final report. The information is not to be abstracted, reprinted or otherwise given public dissemination without the approval of the ORNL patent branch, Legal and Information Control Department.

LEGAL NOTICE

This report was prepared as an account of Government sponsored work. Neither the United States, nor the Commission, nor any person acting on behalf of the Commission:

A. Makes any warranty or representation, expressed or implied, with respect to the accuracy, completeness, or usefulness of the information contained in this report, or that the use of any information, apparatus, method, or process disclosed in this report may not infringe privately owned rights; or

B. Assumes any liabilities with respect to the use of, or for damages resulting from the use of any information, apparatus, method, or process disclosed in this report.

As used in the above, "person acting on behalf of the Commission" includes any employee or contractor of the Commission, or employee of such contractor, to the extent that such employee or contractor of the Commission, or employee of such contractor prepares, disseminates, or provides access to, any information pursuant to his employment or contract with the Commission, or his employment with such contractor.

ORNL-TM-546

Contract No. W-7405-eng-26

METALS AND CERAMICS DIVISION

# SPECIFICATIONS FOR FUEL ASSEMBLIES FOR CORE I OF THE EXPERIMENTAL GAS-COOLED REACTOR

Originally issued as ORNL-CF-60-11-90 (Dec. 9, 1960)

Changes denoted by "R" in right margin.

Additions denoted by "N" in right margin.

DATE ISSUED

**MAY 29 1963**

OAK RIDGE NATIONAL LABORATORY
Oak Ridge, Tennessee
operated by
UNION CARBIDE CORPORATION
for the
U. S. ATOMIC ENERGY COMMISSION

CONTENTS


| | Page |
|---|---|
| ABSTRACT | v |
| INTRODUCTION | 1 |
| MASTER SPECIFICATION FOR FUEL ASSEMBLY FOR CORE I OF THE EXPERIMENTAL GAS-COOLED REACTOR, Spec. No. EGCR-2 | 3 |
| SPECIFICATION FOR FUEL ELEMENTS FOR CORE I FUEL ASSEMBLIES FOR THE EXPERIMENTAL GAS-COOLED REACTOR, Spec. No. EGCR-2-1 | 9 |
| SPECIFICATION FOR FUEL ELEMENT TUBES FOR CORE I FUEL ASSEMBLIES FOR THE EXPERIMENTAL GAS-COOLED REACTOR, Spec. No. EGCR-2-1-1 | 25 |
| SPECIFICATION FOR TOP AND BOTTOM END CAPS FOR CORE I FUEL ASSEMBLIES FOR THE EXPERIMENTAL GAS-COOLED REACTOR, Spec. No. EGCR-2-1-2 | 35 |
| SPECIFICATION FOR URANIUM DIOXIDE FUEL PELLETS FOR CORE I FUEL ASSEMBLIES FOR THE EXPERIMENTAL GAS-COOLED REACTOR, Spec. No. EGCR-2-1-3 | 39 |
| SPECIFICATION FOR MAGNESIUM OXIDE PELLETS FOR CORE I FUEL ASSEMBLIES FOR THE EXPERIMENTAL GAS-COOLED REACTOR, Spec. No. EGCR-2-1-4 | 49 |
| SPECIFICATION FOR FUEL ELEMENT SPACERS FOR CORE I FUEL ASSEMBLIES FOR THE EXPERIMENTAL GAS-COOLED REACTOR, Spec. No. EGCR-2-1-5 | 51 |
| SPECIFICATION FOR TOP SPIDERS AND LOWER SPIDERS FOR CORE I FUEL ASSEMBLIES FOR THE EXPERIMENTAL GAS-COOLED REACTOR, Spec. No. EGCR-2-2 | 55 |
| SPECIFICATION FOR GRAPHITE SUPPORT SLEEVES FOR CORE I FUEL ASSEMBLIES FOR THE EXPERIMENTAL GAS-COOLED REACTOR, Spec. No. EGCR-2-3 | 61 |
| SPECIFICATION FOR RECORDS TO BE KEPT ON CORE I FUEL ASSEMBLIES FOR THE EXPERIMENTAL GAS-COOLED REACTOR, Spec. No. EGCR-2-4 | 67 |

CONTENTS (continued)


| | Page |
|---|---|
| EGCR FUEL ELEMENT DRAWINGS | |
| Fuel Assembly, Fuel Element and Support Sleeve, Dwg. D-2-02-054-9822-E | 73 |
| Fuel Element, Dwg. C-2-02-054-9821-E | 75 |
| Flanged Bushing and Screw, Dwg. B-2-02-054-9813-E | 77 |
| Top Spider, Type I and Type II, Dwg. B-2-02-054-9814-E | 79 |
| Lower Spider, Type I and Type II, Dwg. B-2-02-054-9816-C | 81 |
| Type I and Type II Support Sleeve, Dwg. D-2-02-054-9812-H | 83 |
| Fuel Element Tube, Dwg. B-2-02-054-9818-B | 85 |
| Fuel Element Spacers, Dwg. B-2-02-054-9817-E | 87 |
| Top and Bottom End Caps, Dwg. B-2-02-054-9815-D | 89 |
| Magnesium Oxide Pellet, Dwg. B-2-02-054-9819-B | 91 |
| $UO_2$ Pellet, Dwg. B-2-02-054-9820-B | 93 |
| Fuel Element Tube Subassembly, C-47967 | 95 |
| BIBLIOGRAPHY | 97 |

# SPECIFICATIONS FOR FUEL ASSEMBLIES FOR CORE I OF THE EXPERIMENTAL GAS-COOLED REACTOR

J. H. Coobs
E. A. Wick*
R. M. Evans
G. M. Tolson**

## ABSTRACT

These are as-built specifications for the fuel assemblies for Core I of the Experimental Gas-Cooled Reactor (EGCR) and were developed for R
use in procuring the first core loading. A fuel assembly for the EGCR consists of a cluster of seven cylindrical fuel elements spaced and supported within a graphite sleeve. Each fuel element consists of a stainless steel tube containing a column of hollow $UO_2$ pellets with a spacer brazed at the midsection to control the spacing between fuel elements. A master specification for the fuel assembly, a supplementary specification for each of the components, a specification for record N
keeping during manufacture, a set of drawings, and a list of references are included.

*Allis-Chalmers Manufacturing Company, Nuclear Power Department, Greendale, Wisconsin.

**Author of revision.

# SPECIFICATIONS FOR FUEL ASSEMBLIES FOR CORE I OF THE EXPERIMENTAL GAS-COOLED REACTOR

## INTRODUCTION

The Experimental Gas-Cooled Reactor (EGCR) is a combined experimental and power demonstration reactor now under construction at Oak Ridge, Tennessee. It is fueled with 2.46% enriched uranium dioxide ($UO_2$), clad R in stainless steel, moderated with graphite, and cooled with helium. The plant is designed to produce 84.3 Mw(t) and 22 Mw(e) with the reactor coolant outlet temperature of 1050°F.

The reactor portion of the plant consists of a pressure vessel which contains a temperature barrier, a graphite core, fuel assemblies, and control rods. The reactor power of 84.3 Mw(t) is extracted by a helium flow of 427,000 lb/hr at 315 psia. The coolant enters the reactor at 510°F and exits at 1050°F.

The core is a vertical cylinder constructed of monolithic columns of graphite. Vertical channels are provided through the graphite for the fuel assemblies, control rods, experimental loops, and flux plotters.

Each fuel assembly consists of a cluster of seven cylindrical stainless steel tubes spaced and supported within a graphite sleeve. A stack of six assemblies plus one dummy each at the top and bottom fill a fuel R channel.

The reactor is designed for fuel charging and discharging under load. These fuel-handling operations are accomplished by a charge machine located beneath the reactor and a service machine located above the reactor. The charge machine is used for normal loading and unloading of reactor fuel assemblies. The service machine was designed to handle control rod assemblies, flux-plotting devices, fuel assemblies, special fuel assemblies, and other special devices.

The specifications are intended to define the product and are not intended to define the manufacturing process or procedures, except in a few instances where the quality of the product cannot be controlled by a product specification alone.

A master specification for the fuel assembly, a supplementary specification for each component, a record keeping specification, a set of drawings, and a bibliography are included. These define the fuel R assembly in detail and enable the seller to solicit bids from seller's subcontractors by merely extracting the required component specification and forwarding it to the subcontractor.

The specification for $UO_2$ fuel pellets is written so that the pellets are in specified stack lengths and weights; the stacks are loaded into the fuel element tubes and shipped or moved to the location where the final closure weld is made. While this arrangement appears to offer an economical advantage, it is merely a suggestion and is not a requirement.

The specifications presented in this document reflect, in general, the quality of the first core loading for the EGCR. However, there were some instances where the specifications were not followed to the letter. These were instances where slight deviations from the specification were not considered to affect the overall performance of the fuel assemblies. N

Two examples are presented as follows: N

1. A number of penetrant indications were noted in the heat-affected zone on the tube side of the fuel element closure weld. These indications were in an area where molten metal had formed a small pocket which trapped the penetrant. According to the specification, the vendor was required to remove the indication by grinding the excess weld metal away. This was done on elements for more than one third of the core loading and no defective conditions were found. The remaining portion of the core elements which showed this penetrant indication was accepted without removal of weld metal. N

2. Graphite sleeves were accepted which were out of specification for the following reasons: N

(a) Pits larger than those allowed by the specification in noncritical areas. N

(b) Localized dimensional deviations where they would not affect the flow of the coolant gas or the structural integrity of the sleeve. N

In all cases these deviations were approved by personnel concerned with the performance of the elements. In general, the same personnel had established the original requirements. Records have been retained on these deviations and on where they occur. N

Subject: MASTER SPECIFICATION FOR FUEL ASSEMBLY FOR CORE I OF THE EXPERIMENTAL GAS-COOLED REACTOR

I. SCOPE:

This specification defines the fuel assembly which consists of a cluster of seven cylindrical stainless steel-clad elements within a graphite support sleeve. The fuel elements are loaded with cored $UO_2$ pellets. Top and lower spiders are used to position the fuel elements in the graphite sleeve. R

II. MANUFACTURING REQUIREMENTS:

The fuel assemblies shall be manufactured in accordance with Dwg. D-2-02-054-9822-E, "Fuel Assembly, Fuel Element and Support Sleeve" and in accordance with this specification. R

The seller shall qualify his procedure for welding fuel elements to top spiders as described in Section XI-A of this specification. All fuel element-to-spider welds shall be made by this procedure.

III. REFERENCES:

A. Specifications

1. EGCR-2-1, "Specification for Fuel Elements for Core I Fuel Assemblies for the Experimental Gas-Cooled Reactor"
2. EGCR-2-2, "Specification for Top Spiders and Lower Spiders for Core I Fuel Assemblies for the Experimental Gas-Cooled Reactor"
3. EGCR-2-3, "Specification for Graphite Support Sleeves for Core I Fuel Assemblies for the Experimental Gas-Cooled Reactor"
4. EGCR-2-4, "Specification for Records To Be Kept on Fuel Assemblies for the Experimental Gas-Cooled Reactor"
5. ASTM Designation: A 371 – 53 T, "Specification for Corrosion-Resisting Chromium and Chromium-Nickel Steel Welding Rods and Base Electrodes"

Subject: MASTER SPECIFICATION FOR FUEL ASSEMBLY FOR CORE I OF THE EXPERIMENTAL GAS-COOLED REACTOR

III. REFERENCES (continued):

B. Drawings

1. D-2-02-054-9822-E, "Fuel Assembly, Fuel Element and Support Sleeve" R
2. C-2-02-054-9821-E, "Fuel Element" R
3. B-2-02-054-9813-E, "Flanged Bushing and Screw" R
4. B-2-02-054-9814-E, "Top Spider, Type I and Type II" R
5. B-2-02-054-9816-C, "Lower Spider, Type I and Type II" R
6. D-2-02-054-9812-H, "Type I and Type II Support Sleeve" R

IV. MATERIALS:

Each fuel assembly shall consist of the following components:

| Component | Quantity | Dwg. No. | Spec. No. | |
|---|---|---|---|---|
| Peripheral Fuel Element | 6 | C-2-02-054-9821-E | EGCR-2-1 | R |
| Central Fuel Element* | 1 | C-2-02-054-9821-E | EGCR-2-1 | R |
| Flanged Bushing and Screw | 2 | B-2-02-054-9813-E | None | R |
| Top Spider | 1 | B-2-02-054-9814-E | EGCR-2-2 | R |
| Lower Spider | 1 | B-2-02-054-9816-C | EGCR-2-2 | R |
| Support Sleeve | 1 | D-2-02-054-9812-H | EGCR-2-3 | R |

After assembly the components shall conform to the requirements in the referenced specifications.

V. WELDS:

A. Fuel Elements to Spiders

Each of the seven fuel elements shall be joined to the top spider by welding the top end cap projection to the top spider; only three fuel elements shall be welded to the bottom spider and these three shall be alternate peripheral fuel elements. Each of the welds between the end cap projections and the spiders shall have a minimum penetration of 0.040 in. at the original interface and shall be a continuous 360-deg weld. The weld shall contain no roll over (i.e., weld metal shall not be present on the sides of the truncated cones of the spiders). The welds shall be bright and free of cracks as determined by visual inspection. The welds shall be made by the inert-gas shielded, tungsten-arc (TIG) method. Filler rod, if used, shall conform with ASTM Designation: A 371 – 53 T, grade ER 308.

*A central fuel element has a mid-plane spacer without fins. A peripheral fuel element has a mid-plane spacer with fins.

Subject: MASTER SPECIFICATION FOR FUEL ASSEMBLY FOR CORE I OF THE EXPERIMENTAL GAS-COOLED REACTOR

V. WELDS (continued):

B. Screws to Spiders

The screws shall be joined to the top spider by welding on the inside surface of the spider ring. The welds shall be bright and free of contamination and shall be made by the TIG method.

C. Flanged Bushing

Upon completion of the welds joining the screws to the top spider, the flanged bushing shall make contact with the outside surface of the ring of the top spider.

VI. CLEARANCE:

There shall be a minimum axial end play of 0.004 in. between the cluster of seven fuel elements and the graphite support sleeve. Thus, when the fuel assembly is upright with the cluster supported and the sleeve unsupported, a minimum clearance of 0.004 in. shall exist between the bottom of the top spider ring and the shoulder of the counterbore in the graphite sleeve.

There shall be a minimum clearance of 0.020 in. between the bottom end of each fuel element and the lower spider. The clearance shall be measured from the surface of the closure weld of each fuel element.

VII. ALIGNMENT:

The alignment of the peripheral fuel elements must provide for positioning of mid-plane spacers within 1 deg of true position as shown in Dwg. D-2-02-054-9822-E. R

VIII. SPACING:

Minimum spacing between peripheral fuel elements and the bore of the graphite sleeve shall be 0.110 in. at each end of the fuel elements and for a distance of 4 in. toward the center from the ends of the fuel elements. R

Minimum spacing between any adjacent fuel elements shall be 0.233 in. at each end of the fuel elements and for a distance of 4 in. toward the center from the ends of the fuel elements. R

IX. CLEANLINESS:

The fuel assembly shall be free of oil, grease, dirt, or other foreign material as determined by visual inspection.

Subject: MASTER SPECIFICATION FOR FUEL ASSEMBLY FOR CORE I OF THE EXPERIMENTAL GAS-COOLED REACTOR

X. IDENTIFICATION:

Each fuel assembly shall exhibit an identification number located on the top surface of the central web of the top spider between an outside cone and the tip of a positioning projection. The identification shall be engraved Arabic numbers, starting with 1 and progressing through 1660. Each digit and letter shall be approximately 1/16 in. wide, 1/8 in. long, and have a minimum depth of 0.005 in. R

XI. ACCEPTANCE TESTS:

A. Qualification of Welding Procedure

Prior to the start of manufacture of fuel assemblies, the seller shall be required to demonstrate the capability of his welding procedure to consistently achieve weld penetration in compliance with Section V-A of this specification.

Qualification of the welding procedure shall consist of welding five evaluation samples according to a written procedure. The five evaluation samples shall be welded consecutively. An evaluation sample shall consist of seven end caps welded to a top spider. Each of the seven welds in all five evaluation samples shall have a minimum penetration of 0.040 in. as determined by metallographic examination.

B. Visual

Examinations shall be made under direct daylight-type fluorescent illumination of at least 100 footcandles.

1. Welds. - All welds on each fuel assembly shall be examined visually to determine weld-surface compliance with requirements of Section V of this specification. If the weld is determined by visual examination to be of questionable quality, it shall be subjected to liquid-penetrant examination. Cracked welds may be repaired a maximum of two times.

2. Cleanliness. - Each fuel assembly shall be examined visually to determine compliance with requirements of Section IX of this specification.

3. Identification. - Each fuel assembly shall be examined visually to determine compliance with Section X of the specification.

4. Bushing-Spider Ring Fit. - Each fuel assembly shall be examined visually to determine that the flanged bushing is located against the spider ring as required in Section V of this specification.

Subject: MASTER SPECIFICATION FOR FUEL ASSEMBLY FOR CORE I OF THE EXPERIMENTAL GAS-COOLED REACTOR

XI. ACCEPTANCE TESTS (continued):

C. Alignment

Alignment jigs capable of ensuring correct alignment as specified in Section VII of this specification shall be fabricated by the seller. Such jigs shall be acceptable only after the ability to consistently ensure correct alignment is demonstrated to the company representative. The jigs will be rechecked after the assembly of the first 50 fuel assemblies and after the assembly of each 100 thereafter. R

D. Dimensional

Dimensional inspection of each fuel assembly shall be conducted to determine compliance with tolerances specified in this specification, Sections VI and VIII. Go gages shall be used whenever possible to determine acceptability.

XII. PACKING:

The procedure for packing and crating the fuel assemblies shall be as follows:

1. Wrap assembly with 1/4-in.-thick corrugated cardboard.
2. Place a 3/4-in.-thick by 4-3/4-in.-diam ethafoam disk in the bottom of a 6-in.-ID cardboard mailing tube. The mailing tube shall have a minimum wall thickness of 1/4 in. and shall have a metal bottom and a screw-on type metal cap. The minimum length of the tube shall be 34 in. R
3. Insert wrapped fuel assembly into tube with the top spider at the top of the tube.
4. Pour granulated cork between the assembly and tube and into the center of the sleeve around the stainless steel tubes. Vibrate slightly to pack cork during filling. Fill to within 1/2 in. of top of tube.
5. Place a 3/4-in.-thick by 5-3/4-in.-diam ethafoam disk over top of cork. R
6. Tape on cap of mailing tube and record the fuel assembly number on top of the mailing tube. R
7. Place seven of the mailing tubes in a 55-gal drum (with clamp-on lid) lined with ethafoam. N
8. Pack the drums with cork. Place an ethafoam layer over the top of the mailing tubes and clamp the lid in place. N

Subject: MASTER SPECIFICATION FOR FUEL ASSEMBLY FOR CORE I OF THE EXPERIMENTAL GAS-COOLED REACTOR

XII. PACKING (continued):

9. Record the fuel assembly numbers on the lid of the drum. N

10. Band four drums to a pallet. N

XIII. CERTIFICATION:

The seller shall certify that all requirements of this specification have been met and that all fuel assemblies were subjected to and passed all the acceptance tests required by this specification. Four copies of this certification shall be furnished to the company at the time of shipment.

Subject: SPECIFICATION FOR FUEL ELEMENTS FOR CORE I FUEL ASSEMBLIES FOR THE EXPERIMENTAL GAS-COOLED REACTOR

I. SCOPE:

This specification defines fuel elements consisting of a column of uranium dioxide pellets encased in type 304 stainless steel tubing fitted with top and bottom end caps. The uranium dioxide pellets shall be separated from each end cap by a magnesium oxide pellet. For convenience, the magnesium oxide pellets are in varying thicknesses to minimize, by selection, the clearance beneath the top end cap. The top and bottom end caps shall be joined to the tubing by closure welds. The fuel element shall contain an inert environment of helium. A spacer shall be attached at the axial midpoint of each fuel element to maintain adequate spacing for coolant flow.

II. MANUFACTURING REQUIREMENTS:

The fuel elements shall be manufactured in accordance with Dwg. C-2-02-054-9821-E, "Fuel Element," and in accordance with this specification. R

The final closure weld shall be made in an atmosphere that contains a minimum of 90% helium by volume.

The pressure of the atmosphere in which the final closure weld is made shall not vary from atmospheric pressure by more than 2 psi at room temperature. The equipment in which the final closure weld is made shall contain pressure relief valves adequate to ensure maintaining the required pressure within the welding chamber.

All completed fuel elements shall be cleaned to remove traces of nuclear contamination.

III. REFERENCES:

A. Specifications

1. EGCR-2-1-1, "Specification for Fuel Element Tubes for Core I Fuel Assemblies for the Experimental Gas-Cooled Reactor"
2. EGCR-2-1-2, "Specification for Top and Bottom End Caps for Core I Fuel Assemblies for the Experimental Gas-Cooled Reactor"
3. EGCR-2-1-3, Specification for Uranium Dioxide Fuel Pellets for Core I Fuel Assemblies for the Experimental Gas-Cooled Reactor"
4. EGCR-2-1-4, "Specification for Magnesium Oxide Pellets for Core I Fuel Assemblies for the Experimental Gas-Cooled Reactor"

Subject: SPECIFICATION FOR FUEL ELEMENTS FOR CORE I FUEL ASSEMBLIES FOR THE EXPERIMENTAL GAS-COOLED REACTOR

III. REFERENCES (continued):

5. EGCR-2-1-5, "Specification for Fuel Element Spacers for Core I Fuel Assemblies for the Experimental Gas-Cooled Reactor"
6. ASTM Designation: E 142 – 57 T, "Tentative Method for Controlling Quality of Radiographic Testing"
7. ASTM Designation: E 2 – 49 T, "Methods of Preparation of Micrographs of Metals and Alloys"
8. ASTM Designation: E 3 – 58 T, "Methods of Preparation of Metallographic Specimens"
9. ASTM Designation: E 165 – 60 T, "Methods for Liquid Penetrant Inspection"

B. Drawings

1. C-2-02-054-9821-E, "Fuel Element" R
2. B-2-02-054-9818-B, "Fuel Element Tube"
3. B-2-02-054-9817-E, "Fuel Element Spacers" R
4. B-2-02-054-9815-D, "Top and Bottom End Caps" R
5. B-2-02-054-9819-B, "Magnesium Oxide Pellet"
6. B-2-02-054-9820-B, "$UO_2$ Pellet" R
7. C-47967, "Fuel Element Tube Subassembly" N

IV. MATERIALS:

Each fuel element shall consist of the following components:

| Component | Quantity | Dwg. No. | Spec. No. | |
|---|---|---|---|---|
| $UO_2$ Pellet | 36 | B-2-02-054-9820-B | EGCR-2-1-3 | R |
| Fuel Element Tube | 1 | B-2-02-054-9818-B | EGCR-2-1-1 | |
| Top End Cap | 1 | B-2-02-054-9815-D | EGCR-2-1-2 | R |
| Bottom End Cap | 1 | B-2-02-054-9815-D | EGCR-2-1-2 | R |
| Magnesium Oxide Pellet | 2 | B-2-02-054-9819-B | EGCR-2-1-4 | |
| Fuel Element Spacer for Central Fuel Element | 1 | B-2-02-054-9817-E | EGCR-2-1-5 | R |
| or | | | | |
| Fuel Element Spacer for Peripheral Fuel Element | 1 | B-2-02-054-9817-E | EGCR-2-1-5 | R |

After completion of the fuel element, the condition of the components shall conform to the requirements specified in the referenced specifications.

Subject: SPECIFICATION FOR FUEL ELEMENTS FOR CORE I FUEL ASSEMBLIES FOR THE EXPERIMENTAL GAS-COOLED REACTOR

V. SPACER-TO-TUBE JOINT:

1. The spacer shall be joined to the fuel element tube by copper brazing. Tubing from each manufacturer must be qualified by submitting to the company for approval a sample of their tubing which has been processed through a brazing cycle. This sample shall be processed twice if a rebraze cycle is used. N

2. The brazed joint shall be a continuous uniform fill joint extending completely around the spacer except that a skip of 15 deg will be allowed on one side only as determined by visual examination described in Section XIII-A-5 of this specification. N

3. Copper runoff onto the tube will be acceptable if it is less than 0.001 in. thick. An additional amount of runoff will be allowable to a distance of 3/32 in. on either side of the spacer to a depth not to exceed an imaginary line which connects the top of the spacer ring and the tube at a distance of 3/32 in. from the spacer. N

4. To minimize grain growth, the brazing temperature shall not exceed 2035°F and the material shall not be heated for longer than 20 min above 1800°F. Any change in the final annealing or amount of cold work after the final annealing operation by the tubing manufacturer will require that a sample tubing which has been processed through the brazing cycle be submitted to the company for approval. This sample shall be processed twice if a rebraze cycle is to be used. N

5. A sample of 1% of each brazing batch shall be selected by the company's inspector and shall be examined metallographically by the seller in accordance with Section XIII-B-2 of this specification. N

6. Records shall be provided in accordance with Section XIII-A-7 of this specification. N

7. If time above 1800°F exceeds 20 min or the furnace temperature exceeds 2035°F as determined by an increase in temperature of the furnace control or as determined by a furnace survey, four additional samples (selected by company's inspector) will be sectioned in accordance with Section XIII-B-2 of this specification. The tubes in question will be accepted if they meet the requirements of the specifications and if the grain size is such that in no area on any section are there less than five grains across the wall of the tube. No additional heating will be allowed on these tubes. N

8. No copper is allowed on those areas of the spacers which could be in contact with adjacent spacers. N

Subject: SPECIFICATION FOR FUEL ELEMENTS FOR CORE I FUEL ASSEMBLIES FOR THE EXPERIMENTAL GAS-COOLED REACTOR

VI. FUEL LOADING:

The total length of the column of uranium dioxide fuel pellets shall be 26.625 in. $^{+0.000}_{-0.060}$.

The total weight of uranium dioxide shall be 1411 g ± 33.

The total length of the column of uranium dioxide fuel pellets and the magnesium oxide pellets shall be 27.000 in. ± 0.010.

VII. INTERNAL ATMOSPHERE:

The pressure of the atmosphere within the welded fuel element shall not vary from atmospheric pressure by more than 2 psi at room temperature. R

VIII. DRYNESS:

The column of fuel pellets, the magnesium oxide pellets, and the tube shall not contain more than 14 mg of moisture as determined by the dryness test in Section XIII-A-1 of this specification. R

IX. END CAP WELDS:

A. The end caps shall be joined to the tubing by fusion closure welds. The welds shall be made by the TIG method.

B. The welds shall be sufficiently tight so that no leak will be detected by a mass spectrometer calibrated to detect a standard leak of $7 \times 10^{-9}$ standard cc He/sec at room temperature, as specified in Section XIII-A-3 of this specification.

C. Each closure weld shall have a minimum penetration of 0.020 in. which shall be determined according to Section XIII-B-1 of this specification. R

D. Each weld shall be free of surface cracks, surface porosity, or craters that can be detected visually or with the aid of dye penetrants as specified in Section XIII-A-5 of this specification.

E. Each weld shall be free of internal cracks, voids, porosity, or inclusions that can be detected by the radiographic examination specified in Section XIII-A-2 of this specification.

F. Each weld shall be smooth, bright, and free of contamination as determined by visual inspection.

G. The outside diameter of the fuel element shall not be increased by more than 0.004 in. due to weld roll-over.

Subject: SPECIFICATION FOR FUEL ELEMENTS FOR CORE I FUEL ASSEMBLIES FOR THE EXPERIMENTAL GAS-COOLED REACTOR

X. DIMENSIONAL TOLERANCES:

The fuel element shall conform to the dimensional tolerances specified on Dwg. C-2-02-054-9821-E, "Fuel Element," Dwg C-47967, "Fuel Element Tube Subassembly," and as outlined in this specification. R

XI. SURFACE FINISH AND CONDITION:

The surface finish of the fuel element shall be as specified on Dwg. C-2-02-054-9821-E, "Fuel Element." R

All surfaces shall be bright and free of oil, grease, dirt, or other foreign materials as determined by visual inspection.

XII. DIAMETRAL CLEARANCE:

The diametral clearance between fuel pellet and the capsule tubing shall not exceed 0.006 in.

XIII. ACCEPTANCE TESTS:

A. Nondestructive

1. Dryness Test. - Every one-hundredth fuel element shall be selected for dryness tests just prior to performing the final closure weld. The dryness test shall consist of removing the fuel pellets and magnesium oxide pellets from the tube. The fuel pellets, magnesium oxide pellets, and tube shall then be heated for 4 hr at 250°C at a pressure not exceeding 1000 μ. If the total weight loss of the above components exceeds 14 mg after drying, the remaining 99 fuel elements shall be rejected.

2. Radiographic Examination of Closure Welds. - A sampling as specified in Section XIII-C of this specification shall be 100% radiographed. Selected welds shall be examined using a radiographic technique* that is consistently capable of detecting discontinuities of 0.005-in.-max dimension. Radiographic technique shall be capable of allowing a complete evaluation of the entire weld area.

   A minimum acceptable demonstration will be the visible image of a 0.005-in.-diam hole in a 0.005-in.-thick penetrameter. In addition, the penetrameter shall contain holes of 0.010 and 0.0025-in. diam. The 0.010-in. hole shall be used as the reject criterion.

*See "Radiography Techniques for End-Plug-to-Tube Welds," Section XIV of this specification for two techniques that might be employed.

XIII. ACCEPTANCE TESTS (continued):

The penetrameter is to be placed in every exposure so that its projected image will be visible through the same metal thickness as is the image of the inspected weld. The penetrameter shall not be in a more favorable orientation than that portion of the weld having the most unfavorable orientation.

All other radiographic requirements shall be in accordance with the recommendations of ASTM Designation: E 142 – 59 T, "Controlling Quality of Radiographic Testing."

3. Helium-Leak Test of Closure Welds. - Each fuel element shall be helium-leak tested before penetrant inspection is performed. Helium-leak testing shall be carried out in accordance with the following procedure:

a. Scope: This section applies to the bell jar method of testing the assembled, helium-containing fuel elements after the final closure weld has been accomplished.

b. Reference: The manufacturer's operating manual for the particular instrument used in the inspection.

c. Equipment:

(1) A mass-spectrograph type, helium-sensitive instrument, similar to the Veeco Type MS-9 or Consolidated Engineering Corporation Type 24-110, which includes the following as incorporated in the instrument or as additions or modifications:

A cold trap (liquid nitrogen or liquid air).

A helium-leak source of $7 \times 10^{-9}$ std cc/sec.

An external or auxiliary roughing vacuum pump connected to the instrument manifold and to the specimen or test chamber through a vacuum valve.

A throttling or modulating valve between the instrument manifold and the instrument.

(2) A low-pressure supply of helium with a nozzle less than 1/16 in. in diameter for use in checking for leaktight connections.

Subject: SPECIFICATION FOR FUEL ELEMENTS FOR CORE I FUEL ASSEMBLIES FOR THE EXPERIMENTAL GAS-COOLED REACTOR

XIII. ACCEPTANCE TESTS (continued):

(3) One or more leaktight chambers, each of which is capable of accommodating a fuel element for the final closure weld inspection and having no less than 3/8-in.-diametral clearance between the fuel element and the wall of the chamber.

d. Technical Requirements:

(1) The instrument sensitivity shall be such that the stable signal from the standard leak, as determined in Section XIII-A-3-e(3) of this specification, is at least twice as large as the signals produced by background noise. R

(2) The inspection shall be performed in an area of low helium background. R

(3) The connecting lines between the test chamber and the instrument manifold shall be as short as is practical and should have a minimum inside diameter of 1/2 in. All connections shall be leaktight.

(4) Care shall be exercised to avoid plugging leaks with any sealant prior to attempted detection with helium.

(5) All assembled fuel elements shall be either helium-leak tested within 24 hr after the final closure weld is completed or stored in a helium atmosphere of pressure equal to or greater than the internal pressure of the fuel element until such time as they can be helium-leak tested. If a fuel element is to be retested or if the testing procedure is interrupted, as in Section XIII-A-3-e(1), -e(6), and -e(7) of this specification, the fuel element shall be stored in a helium atmosphere as described until such time as testing can be completed. No assembled fuel element shall be allowed to remain in a nonhelium atmosphere for more than 48 hr between the time of its assembly and the completion of helium-leak testing unless it is placed in helium at 45 psia for a minimum of 45 min before leak testing. R

e. Testing Procedure:

(1) The performance of the leak-detector equipment shall be verified after each inspection. If at any time this equipment fails to function properly, as described in the manufacturer's operating manual, and/or if the

Subject: SPECIFICATION FOR FUEL ELEMENTS FOR CORE I FUEL ASSEMBLIES FOR THE EXPERIMENTAL GAS-COOLED REACTOR

XIII. ACCEPTANCE TESTS (continued):

sensitivity as determined in Section XIII-A-3-d(1) of this specification decreases below the minimum level prescribed in Section XIII-A-3-d(1), the equipment shall be readjusted to function properly and re-calibrated, and all fuel elements which have been inspected during the interim since the last satisfactory performance verification of the equipment shall be inspected again.

(2) The closure welds shall be inspected as follows: The assembled, helium-containing fuel elements shall be inspected after the final closure weld has been accomplished by placing the fuel element in the inspection chamber, evacuating the chamber, and searching for helium leaks as prescribed in the instrument manufacturer's operating manual.

(3) The instrument shall be calibrated as follows: The standard leak source ($7 \times 10^{-9}$ std cc/sec) shall be connected to one end of the test chamber. The opposite end of the test chamber shall be connected to the manifold, and the time which is required to produce a signal two times as large as the background noise shall be measured. This measurement shall be accomplished while examining a 100% sample from the test chamber and with all valves between the standard leak source and the helium-sensing device completely open. This portion of the calibration shall be continued until the signal from the standard leak reaches a stable amplitude. The signal amplitude and manifold pressure shall be measured at this point.

(4) The inspection shall be made taking a sample from the test chamber. All valves between the fuel element and the helium-sensing device shall be completely open and the time of inspection shall be no less than one minute and at least twice as long as the time, as determined in Section XIII-A-3-e(3) of this specification for that particular method, required for the standard leak to produce a signal two times as large as the background noise.

XIII. ACCEPTANCE TESTS (continued):

(5) The manifold pressure at which the inspection is made shall be the same as the pressure at which the instrument is calibrated, as measured in Section XIII-A-3-e(3) of this specification.

(6) Excessive pump-down time shall be indicative of an external leak. The leak shall be located and corrected before further testing is accomplished.

(7) During the inspection, any signal which produces an indication two times as large as the background noise level shall be indicative of a through path or leak in the fuel element being inspected and that fuel element shall be rejected. If more than one assembled fuel element is being inspected at the time a leak is detected, the fuel elements shall be inspected again such that the leaking fuel element or elements are identified and rejected.

(8) All rejected, assembled fuel elements shall be disassembled. Any salvageable parts of the rejected fuel elements may be reused in the assembly of other elements. A salvageable item is an item that is reinspected and found to conform to the specification.

4. Penetrant Inspection of Closure Welds. - Each weld shall be 100% examined for discontinuities in accordance with ASTM Designation: E 165 – 60 T, "Methods for Liquid Penetrant Inspection," except as follows:

a. "Method A, Procedure A-2" shall be followed except as modified by paragraphs b through h below.

b. Precleaning shall be accomplished by vapor degreasing.

c. Minimum penetrant soak time shall be 30 min.

d. Emulsification time shall be held to a minimum required to permit removal of excess penetrant and shall not exceed 3 min.

e. Drying shall be accomplished by circulating air of 170°F or less for a period of time that will not cause evaporation of penetrant.

Subject: SPECIFICATION FOR FUEL ELEMENTS FOR CORE I FUEL ASSEMBLIES FOR THE EXPERIMENTAL GAS-COOLED REACTOR

XIII. ACCEPTANCE TESTS (continued):

f. Dry-powder developer shall be used. The powder shall remain on the part for a minimum of ten minutes prior to inspection.

g. Magnaflux ZL 22 penetrant or equivalent shall be used. "Equivalents" shall be approved by the company.

h. If the first closure weld is inspected prior to performance of the second closure weld, no penetrant shall be allowed inside the tube.

i. All penetrant indications shall be evaluated visually in accordance with Paragraph A-5 below. If, after removal of the penetrant, there is no visual evidence of a discontinuity, the weld shall be reprocessed through penetrant inspection. Reappearance of the penetrant indication shall cause the piece to be rejected. R

5. Visual Examination. - All end closure welds and heat-affected zones shall be visually examined for evidence of folds, cracks, surface porosity, and surface inclusions, using optical magnification of 3X to 6X. Discontinuities having depths in excess of 0.0025 in. shall cause the fuel element to be rejected.

All spacer-to-tube joint brazing shall be visually examined to determine conformance with Section V of this specification.

Visual examinations shall be made under direct daylight-type fluorescent illumination of at least 100 footcandles.

6. Dimensional Inspection. - A sampling of the completed fuel elements selected as specified in Section XIII-C of this specification shall be dimensionally inspected for conformance with the dimensional tolerances specified on Dwg. C-2-02-054-9821-E, "Fuel Element," and with this specification. This inspection applies to overall length from weld-to-weld, rod diameter at each weld, and axial location of spacer. R

7. Brazing Process Records. - The seller shall provide a thermal trace for each brazing furnace lot of tubes to determine conformation with Section V of this specification. Tubes from furnace brazing lots on which the thermal trace does not show conformance to Section V shall be rejected. Each tube shall be identified by its brazing furnace lot number. N

Subject: SPECIFICATION FOR FUEL ELEMENTS FOR CORE I FUEL ASSEMBLIES FOR THE EXPERIMENTAL GAS-COOLED REACTOR

XIII. ACCEPTANCE TESTS (continued):

8. Gas Sampling. - The seller shall submit to the company for approval a plan for ensuring that the purity specification for the chamber welding atmosphere as defined in Section II of this specification is met. R

B. Destructive

1. Metallographic Examination to Determine Weld Penetration. -

a. A sample of 1% of the fuel elements shall be selected by the company's inspector for examination. If one or more fuel elements of the 1% random sample are rejected, then twice the original number of fuel elements shall be selected for testing. If one or more of the second group are determined to be rejectable, then the entire lot will be considered rejectable and the manufacturer will be responsible for initiation of corrective action. After initiation of corrective action, sampling will again go into effect as described above. R

b. The fuel element shall be sectioned longitudinally through the weld area at approximately 90 deg intervals, thus permitting four penetration measurements on each weld. (One section shall be made at the location where welding was stopped.) One half of the sample fuel elements shall be sectioned at the initial closure weld and the remainder at the final weld. (Editor's note: Vendor sectioned both welds on all samples.) N

c. The sections shall be prepared for examination, metallographically measured, and photographed as specified in ASTM Designations: E 2 – 49 T and E 3 – 58 T unless otherwise specified in this specification. The photographs shall become the property of the company and shall be delivered with or prior to final shipment.

2. Metallographic Examination of Spacer-to-Tube Braze. - A sample of 1% of each brazing batch shall be selected by the company's inspector. These samples shall be sectioned transversely through the spacer and the section metallographically examined and photographed as specified in ASTM Designations: E 2 – 49 T and E 3 – 58 T. The grain size shall be reported in accordance with ASTM Designations: E 112 – 58 T and E 19 – 46 and the minimum number of grains R

XIII. ACCEPTANCE TESTS (continued):

across the wall of the tube shall be reported. The photographs shall show an area of maximum grain size and shall become the property of the company. If in any area there are less than five grains across the wall of the tube, the company will be notified by wire that day. It will not be required to report any unbrazed areas in the samples.

C. Statistical Sampling Plan

A modified, one-sided sequential sampling plan for radiographic and dimensional acceptability will be employed until an acceptable quality level (AQL) of 0.0001 is demonstrated; thereupon, a single sampling plan will be used. The sequential sampling plan is based on an AQL of 0.0001, a lot tolerance fraction defective of 0.01, and $\alpha = \beta = 0.01$.

One hundred percent inspection will be performed until the number of defective fuel elements satisfies the following equation:

$$C = 0.002156N - 0.995666$$

where N is the number inspected and C is the number rejected. This equation is shown in Fig. 1; for example, if there are no defective elements among the first 462 inspected, then the single sampling plan will thereafter be used.

The single sampling plan is to be used as follows: From each group of 50 fuel elements, 10 will be inspected. If there are no defective elements, the group will be accepted; if one or more defective elements are detected, the group must be 100% inspected. R

XIV. RADIOGRAPHY TECHNIQUES FOR END-PLUG-TO-TUBE WELDS:

One technique (illustrated in Fig. 2) involves radiographing directly through the 0.200-in.-diam pin of the end cap. The type 304 stainless steel mask that fits snugly around the cap configuration increases the total thickness of the metal to 0.250 in. between the radiation source and the weld. The minimum detectable defect size is approximately 0.004 in. to 0.006 in., as limited by the film and other considerations exclusive of the specimen thickness. This minimum size is still attainable through the 0.250-in. mask even though the available subject contrast is decreased. The principal advantage of the mask is that undercut and scatter from the pin are eliminated and a uniform exposure is attained over the portion

Subject: SPECIFICATION FOR FUEL ELEMENTS FOR CORE I FUEL ASSEMBLIES FOR THE EXPERIMENTAL GAS-COOLED REACTOR

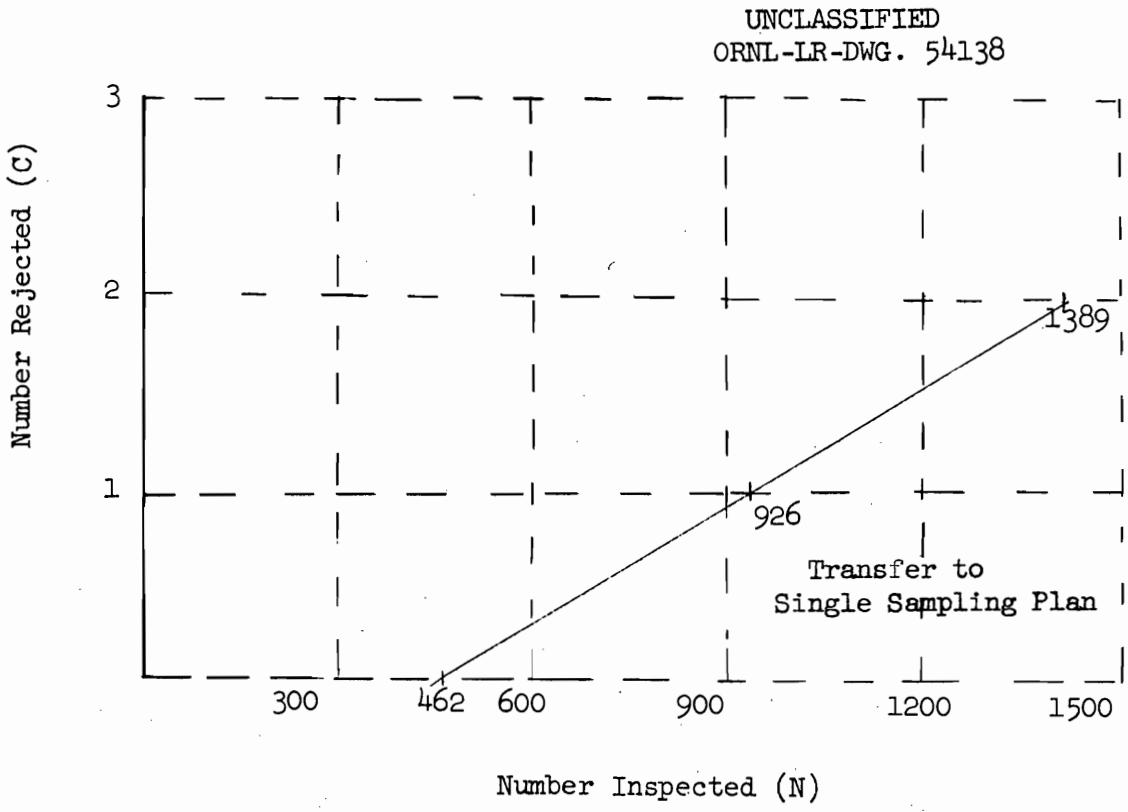


Fig. 1. Sampling Plan for Radiographic and Dimensional Inspection of Fuel Elements.

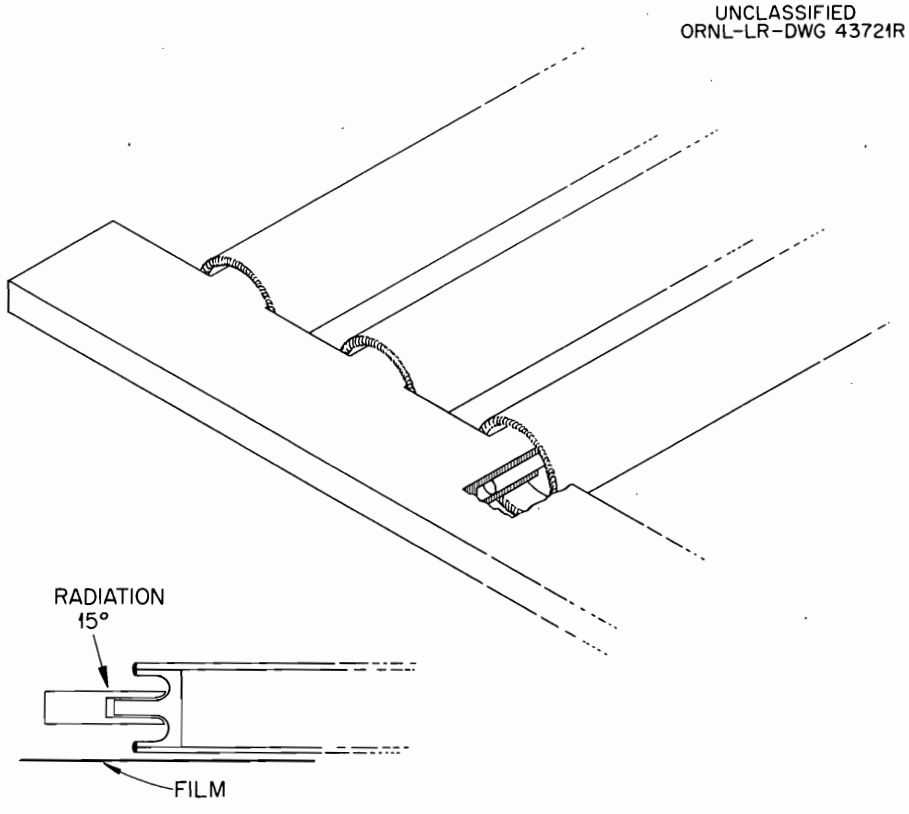


Fig. 2. One of Two Suggested Techniques for Radiographic Examination of Fuel Element Closure Welds. This technique involves radiographing directly through the end cap pin. The type 304 stainless steel mask which fits over the pin increases the total thickness of the metal to 0.250 in. The mask eliminates undercut and scatter from the pin so that a uniform exposure is attained over the portion of the weld being examined.

Subject: SPECIFICATION FOR FUEL ELEMENTS FOR CORE I FUEL ASSEMBLIES FOR THE EXPERIMENTAL GAS-COOLED REACTOR

XIV. RADIOGRAPHY TECHNIQUES FOR END-PLUG-TO-TUBE WELDS (continued):

of the weld being examined. This technique requires five exposures around the circumferential weld at 72-deg intervals. The penetrameter used is a 0.005-in.-thick shim of type 304 stainless steel containing a 0.005-in.-diam hole. This is placed on the mask and the image of the 0.005-in. hole is plainly visible on all radiographs.

The second radiographic technique is illustrated in Fig. 3. The weld bead is projected slightly and the fuel element is inclined at an angle so as to prevent the pin from interfering with the weld image. This technique achieves better contrast due to the reduced thickness of the specimen; however, the minimum detectable defect size is still essentially the same. Some interpretation difficulties are encountered with this technique due to the very small weld image and the rapidly changing thickness through which the radiation passes immediately adjacent to the weld, (i.e., the thickest portion of the cap).

XV. CERTIFICATION AND TEST REPORTS:

At the time of shipment, the seller shall furnish the company four copies of a certification stating that all requirements of this specification have been met.

The seller shall also furnish four certified copies of dryness test reports. These reports shall include initial weights, final weights, weight loss, and fuel element number.

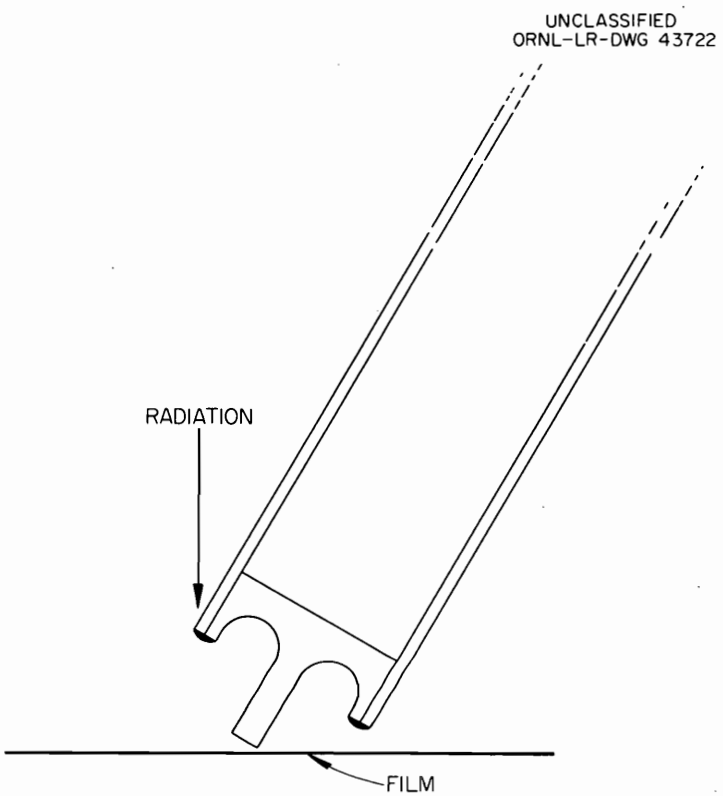


Fig. 3. The Second of Two Suggested Techniques for Performing Radiographic Examination of Fuel Element Closure Welds. The weld head is projected slightly with the fuel element being inclined to prevent the pin from interfering with the weld image.

Subject: SPECIFICATION FOR FUEL ELEMENT TUBES FOR CORE I FUEL ASSEMBLIES FOR THE EXPERIMENTAL GAS-COOLED REACTOR

I. SCOPE:

This specification defines seamless, cold-drawn type 304 stainless steel tubing with an inside diameter of 0.710 in. and a wall thickness of 0.020 in. All requirements of the latest revision of ASTM Designation: A 269 shall apply except as specifically modified in this specification.

II. MANUFACTURING REQUIREMENTS:

Tubes shall be manufactured in conformance with Dwg. B-2-02-054-9818-B and with this specification.

Tubes shall be extruded or pierced, hot-rolled and cold-drawn, or reduced to specific size.

III. REFERENCES:

Dwg. B-2-02-054-9818-B, "Fuel Element Tube"

ASTM Designation: A 269 – 59 T, "Specification for Seamless and Welded Austenitic Stainless Steel Tubing for General Service"

ASTM Designation: E 165 – 60 T, "Methods for Liquid Penetrant Inspection"

AISI, September, 1957, "Steel Tubular Products"

IV. CHEMICAL COMPOSITION:

The chemical composition of the austenitic steel used shall conform to the requirements of the latest revision of ASTM Designation: A 269, grade TP 304. The steel shall also conform to the following requirements:

| | |
|---|---|
| Carbon | 0.04 wt % (min) |
| Cobalt | 0.2 wt % (max) |
| Boron | 10 ppm (max) |

V. PHYSICAL PROPERTIES:

The tubing shall be furnished in the annealed condition and free of intergranular attack. However, a maximum of 10% residual cold work for size control will be allowed. The annealed tubing shall have a maximum Rockwell hardness number of B 90. The tubing shall also conform to the hydrostatic test requirements specified in the latest revision of ASTM Designation: A 269.

Subject: SPECIFICATION FOR FUEL ELEMENT TUBES FOR CORE I FUEL ASSEMBLIES FOR THE EXPERIMENTAL GAS-COOLED REACTOR

VI. DIMENSIONS AND TOLERANCES:

A. The inside diameter shall be 0.710 in. $^{+0.002}_{-0.000}$. "Inside diameter" here does not mean "average inside diameter," but refers to actual diameter at any given plane perpendicular to the axial center line.

B. The wall thickness shall be 0.020 in. ± 0.002. "Wall thickness" does not mean "average wall thickness," but refers to wall thickness in any plane normal to the axial center line. All dimensional tolerance measurements shall be made after the hydrostatic test is performed.

C. The tubing shall be furnished in lengths of 27.500 in. $^{+0.015}_{-0.000}$.

D. The tube ends shall be perpendicular to the outside surface within 0.005 in.

E. Corners formed by ends of tubing and longitudinal surfaces shall be square and deburred with a maximum chamfer of 0.005 in.

F. The tubing shall be straight within 0.030 in. per 3-ft length as stated in AISI, September, 1957, "Steel Tubular Products."

VII. SURFACE FINISH AND CONDITION:

The tubing shall have a bright surface finish on the inside surfaces and shall be free of scale and oxide film or other foreign materials as determined by visual inspection. The outside surface shall be polished using a belt of 320 grit or finer. Tubing shall be furnished free of seams, cracks, laps, and intergranular attack. All inclusions, pits, gouge marks, and score marks in excess of 0.0025 in. shall be cause for rejection. Discontinuities which individually would be considered nonrejectable are to be considered rejectable defects if they occur as multiples around any circumference of the tube or if they are aligned along an element of the tube.

VIII. ACCEPTANCE TESTS:

A. Nondestructive

1. Liquid Penetrant. - A 100% liquid-penetrant inspection shall be performed by the seller on the entire outside diameter surface of the finished tubes in accordance with ASTM Designation: E 165 – 60 T, "Methods for Liquid Penetrant Inspection," except as specifically modified below:

Subject: SPECIFICATION FOR FUEL ELEMENT TUBES FOR CORE I FUEL ASSEMBLIES FOR THE EXPERIMENTAL GAS-COOLED REACTOR

VIII. ACCEPTANCE TESTS (continued):

a. Precleaning to the extent necessary to remove all foreign material that might obscure test results shall be accomplished by vapor degreasing.

b. Only "Method A, Procedure A-2" is considered an acceptable procedure.

c. Penetrant shall remain on the tubes for a minimum of 30 min.

d. Penetrant shall be Magnaflux ZL 22 or equivalent. "Equivalent" shall be approved by the company.

e. Emulsification time shall be held to a minimum required to remove excess penetrant but not to exceed 2 min.

f. Drying shall be accomplished by circulating air at 170°F or less for a time that will not cause evaporation of the penetrant.

g. Dry-powder developer shall be used. The powder shall remain on the tubes a minimum of 10 min prior to inspection.

h. All penetrant indications shall be evaluated to determine if requirements of Section VII of this specification are satisfied.

i. Reinspection after removal of defects is required.

2. Eddy-Current. - Eddy-current or ultrasonic inspection shall be performed on all tubes. If eddy-current is used, the inspection shall be performed as follows: R

a. Technical Requirements:

(1) The tubing shall be inspected in random lengths prior to cutting the tubing to the specified lengths. The uninspected ends (refer to Section VIII-A-2-c of this specification) shall be removed before cutting the acceptable tubing to the specified lengths.

(2) The inspection shall be accomplished by an inspector whose competence is certified by the seller.

(3) The inspection equipment used shall be suitable as described in Section VIII-A-2-b of this specification.

Subject: SPECIFICATION FOR FUEL ELEMENT TUBES FOR CORE I FUEL ASSEMBLIES FOR THE EXPERIMENTAL GAS-COOLED REACTOR

VIII. ACCEPTANCE TESTS (continued):

(4) The defective portion of tubing classified "rejected" according to the provisions of Section VIII-A-2-c of this specification shall be removed prior to cutting the tubing to final length. The defective section shall be marked in such a manner that it is clearly indicated that the defective section has been rejected by the eddy-current inspection.

(5) The inspection procedure shall be in accordance with Section VIII-A-2-c of this specification.

(6) Standardization of the inspection shall be accomplished according to the provisions of Section VIII-A-2-d of this specification.

(7) The tubing shall be inspected at the completion of the manufacturing process or immediately prior to the final anneal and straightening operation. No drawing operation shall be accomplished after the eddy-current examination.

b. Inspection Equipment:

(1) Inspection shall be accomplished using an encircling- (feed-through) coil system.

(2) The mechanism used to drive the tubing through the coil system shall be capable of operating at a constant speed and shall be free from jerking and excessive vibration.

(3) The sensitivity of the instrumentation shall be such that the provisions of Section VIII-A-2-c of this specification can be accomplished.

(4) Signals from the inspection equipment shall be displayed in such a manner that the presence of a defect is clearly indicated.

c. Inspection Procedure:

(1) A standard reference tube fabricated according to Section VIII-A-2-d of this specification shall be used to establish the sensitivity and response of the inspection system.

Subject: SPECIFICATION FOR FUEL ELEMENT TUBES FOR CORE I FUEL ASSEMBLIES FOR THE EXPERIMENTAL GAS-COOLED REACTOR

VIII. ACCEPTANCE TESTS (continued):

(2) The tubing shall be driven through the coil system at a uniform rate of speed. The speed shall be in conformance with the capabilities of the inspection instrumentation and the operator to clearly detect the signal produced by the standard defect in the standard reference tube.

(3) The equipment shall be adjusted in such a manner that a clear indication of the presence of the standard defect in the reference tube is obtained.

(4) The operating frequency of the instrument shall be chosen as low as possible, consistent with the reliable detection of the standard defect, but the frequency shall not exceed the maximum frequency calculated by the following formula:

$$F_{max} = \frac{36.5}{D^2} \text{ kc}$$

where F = Frequency (kc)
D = Nominal Tubing Diameter (in.)

(5) The standard reference tube shall be used periodically to check the performance of the inspection. If at any time the equipment fails to produce a clear indication of the presence of the standard defect, the equipment shall be readjusted to give a clear indication, and all tubing which has been inspected during the interim since the last satisfactory standardization shall be inspected again.

(6) Any portion of the tubing which produces an indication as large or larger than the average indication produced by the standard notches in the standard reference tube as defined in Section VIII-A-2-d of this specification shall be rejected.

(7) If a phase detector is being utilized in the inspection equipment, the phase control shall be adjusted such that a phase shift of 10 deg in either direction from the operational setting will not reduce the size of the indication from the standard defect more than 15%.

Subject: SPECIFICATION FOR FUEL ELEMENT TUBES FOR CORE I FUEL ASSEMBLIES FOR THE EXPERIMENTAL GAS-COOLED REACTOR

VIII. ACCEPTANCE TESTS (continued):

(8) The tubing shall be inspected by feeding it through the coil system in the direction which produces the most sensitive inspection.

(9) A test shall be devised by the seller to determine the length of the uninspected ends of the tubing.

d. Standard Reference Tube:

(1) Standard reference tubes shall be fabricated from tubing taken from the same heat and manufactured by the same processes as the tubing to be inspected.

(2) Standard reference tubes shall be approximately 5 ft long.

(3) Longitudinal notches shall be cut on the outside surface of the tube at approximately 3-in. intervals along the tube beginning 6 in. from each end of the tube. The notches shall be cut with an electrical-spark-discharge machine using a tool 0.004 in. thick and 1/4 in. long having a 1/16-in. radius at each end. The notches shall have a depth equal to 12.5% of the wall thickness. Any alternate method of notch making must have prior approval of the company.

(4) The standard reference tube shall be examined with the eddy-current equipment. The average signal produced by the notches shall be determined and the depth of one of these notches which produces a signal equal to or greater than the average notch signal shall be accurately measured. If the depth of this notch is not greater than 12.5% of the wall thickness, the tube may be used as the standard reference tube for calibrating the eddy-current equipment.

(5) Any defect indication which may be present in the standard reference tube shall not be allowed to interfere with the identity or evaluation of the standard defects.

(6) The standard reference tube shall be examined visually in the region of the standard defect to determine any damage to the tube as a result of the machining operation. The tubing shall be free of scores, dents, burrs, and other marks in the region of the standard defect.

Subject: SPECIFICATION FOR FUEL ELEMENT TUBES FOR CORE I FUEL ASSEMBLIES FOR THE EXPERIMENTAL GAS-COOLED REACTOR

VIII. ACCEPTANCE TESTS (continued):

3. Ultrasonic. - If ultrasonic inspection is used, the inspection shall be performed as follows: N

a. Technical Requirements: the tubing shall be inspected at the completion of the manufacturing process. No drawing operation shall be accomplished after the ultrasonic inspection. N

b. Inspection Equipment: The instruments and accessory equipment shall be of the pulse-reflection type with sufficient sensitivity to distinguish the reference notches as required during calibration. N

The transducer employed shall have no dimension greater than 1 in. N

c. Calibration Standards: A calibration standard shall be prepared from tubing taken from the same heat and manufactured by the same processes as the tubing to be inspected and shall be free of defects; the tubing used for the calibration standard shall be the same size as the tubing to be inspected and shall be in the as-polished condition. A longitudinal reference notch, 1/4 in. long and with a maximum depth of 0.0025 in., (the depth shall include the highest point of the metal due to upset, although "deburring" is permitted) shall be machined on the outside and inside surfaces of the standard. The notch may be made by the electric-arc-discharge method. If both reference notches are on the same end of the standard, they shall be at least 120 deg apart. The included angle of the reference notch shall not exceed 60 deg. N

d. Equipment Calibration: Using the calibration standard specified in Section VIII-A-3-c, the equipment shall be adjusted to produce indications as nearly as possible the same height from both the inside and outside reference notches. The rejection alarm shall be adjusted to signal at the indication of the lesser amplitude. N

The equipment shall be calibrated at the same circumferential speed and rate of translation (feed helix) which will be used for the inspection of the tube. N

Subject: SPECIFICATION FOR FUEL ELEMENT TUBES FOR CORE I FUEL ASSEMBLIES FOR THE EXPERIMENTAL GAS-COOLED REACTOR

VIII. ACCEPTANCE TESTS (continued):

The relative translation (feed helix) of the crystal with respect to the tube shall be the lesser of 3/8 in./revolution or one half the crystal or collimator width or diameter. N

e. Inspection Procedure: The material shall be tested for radial-type defects in both circumferential directions under identical conditions which are used for calibration of the equipment. N

The equipment shall be recalibrated as specified in Section VIII-A-3-d after the inspection of ten lengths of tubing or when any adjustment to the equipment is made. N

When significant adjustment of the equipment is required during the calibration check (any time the inside and outside reference notches do not present a rejectable signal), the preceding ten tubes shall be completely reinspected.

f. Defects and Rejection: All indications of discontinuities equal to or greater than the lesser indication of the reference notches as described in Section VIII-A-3-d shall be considered as defects and shall be rejected. If the defect is reworkable, it may be removed and reinspected ultrasonically. Reworked material shall conform to the dimensional requirements of this specification. N

4. Hydrostatic Test. - Each tube shall be tested at a hydrostatic pressure of 800 psi prior to dimensional inspection.

5. Dimensional Inspection. -

a. Mechanical measurements of the wall thickness shall be made at 90-deg intervals or less on each end of each tube (cut to length) to determine compliance with Section VI-B of this specification.

b. Each finished tube shall be subjected to an air-gage inspection of the inside diameter to determine compliance with Section VI-A of this specification. Diametral measurements shall be made at intervals of approximately 90 deg.

Subject: SPECIFICATION FOR FUEL ELEMENT TUBES FOR CORE I FUEL ASSEMBLIES FOR THE EXPERIMENTAL GAS-COOLED REACTOR

VIII. ACCEPTANCE TESTS (continued):

c. A random 10% sample of the tubes in finished condition and cut to length shall be subjected to an ultrasonic-resonance type inspection for wall-thickness determination. The accuracy of the test equipment for use in this measurement shall be established by taking readings at a point near the end of one or more tubes and checking by measurement with a micrometer.

A continuous helical scan shall be accomplished on the inspected tubing with a pitch not to exceed 1 in. An acceptable alternate will be circumferential scans on 1-in. centers. If one or more tubes of the 10% sampling are determined not to meet the dimensional requirements as stated in this specification, an additional 20% sampling shall be examined in the same manner. A rejection rate of 10% or more of the tubes tested shall be cause for 100% inspection of the entire lot.

Tubes not subjected to ultrasonic resonance tests for wall thickness by the seller are subject to such tests by the company. The tubes are subject to rejection if the tests by the company show that the wall thickness does not conform to the dimensional requirements of this specification.

d. The seller shall perform inspection on each tube for length, end squareness, and straightness to determine compliance with Sections VI-C, VI-D, and VI-F, respectively, of this specification.

6. Visual. - Each tube shall be visually inspected under direct daylight-type fluorescent lighting of at least 100 foot-candles to ensure conformance to Section VII of this specification.

B. Destructive

1. Metallographic examination at 100X of one section of tubing selected at random from each lot shall be prepared to determine compliance with Section V of this specification.

2. Metallographic specimens shall be forwarded by the seller to the company at time of shipment.

Subject: SPECIFICATION FOR FUEL ELEMENT TUBES FOR CORE I FUEL ASSEMBLIES FOR THE EXPERIMENTAL GAS-COOLED REACTOR

IX. MARKING AND PACKING:

A. Each tube shall be marked with a continuously recurring legend using nonmetallic inks (nonsulfur bearing) which are not water soluble. The marking shall include the words "TP 304" and "ASTM A 269" as well as heat number, size, and manufacturer's name or trademark. The marking shall be done after dye-penetrant inspection.

B. Each tube shall be packed in such a manner as to prevent damage and to maintain the cleanliness of the tubing during handling and shipment.

X. TEST REPORTS:

Four certified copies of test reports shall be furnished by the seller to the company at the time of shipment of each lot of material. At the time of shipment, the seller shall also furnish to the company four copies of a certification stating all requirements of this specification have been met.

Subject: SPECIFICATION FOR TOP AND BOTTOM END CAPS FOR CORE I FUEL ASSEMBLIES FOR THE EXPERIMENTAL GAS-COOLED REACTOR

I. SCOPE:

This specification defines type 304 stainless steel end caps, 0.710 in. in diameter.

II. MANUFACTURING REQUIREMENTS:

The top and bottom end caps shall be manufactured in conformance with Dwg. B-2-02-054-9815-D and with this specification. R

The end caps shall be manufactured from wrought bar stock by machining or by forging and machining.

III. REFERENCES:

Dwg. B-2-02-054-9815-D, "Top and Bottom End Caps" R

ASTM Designation: A 276 – 57 T, "Specification for Hot-Rolled and Cold-Finished Corrosion-Resisting Steel Bars"

ASTM Designation: E 165 – 60 T, "Methods for Liquid Penetrant Inspection"

IV. CHEMICAL COMPOSITION:

The chemical composition of the steel used shall conform to the latest revision of ASTM Designation: A 276, type 304 (wrought bar stock). The steel shall also conform to the following impurity content requirements on a weight basis:

| | |
|---|---|
| Cobalt | 0.2% (max) |
| Boron | 10 ppm (max) |

V. PHYSICAL AND MECHANICAL PROPERTIES:

The physical and mechanical properties shall conform to the requirements of the latest revision of ASTM Designation: A 276 (wrought bar stock), type 304 stainless steel.

VI. DIMENSIONAL TOLERANCES:

The top and bottom end caps shall conform to the dimensions and tolerances specified on Dwg. B-2-02-054-9815-D and in this specification. R

Subject: SPECIFICATION FOR TOP AND BOTTOM END CAPS FOR CORE I FUEL ASSEMBLIES FOR THE EXPERIMENTAL GAS-COOLED REACTOR

VI. DIMENSIONAL TOLERANCES (continued):

The critical dimensional tolerances are summarized as follows:

| | | | |
|---|---|---|---|
| End cap diameter | 0.712 in. | $^{+0.002}_{-0.000}$ | R |
| Diameter of end cap projection* | 0.200 in. | $^{+0.000}_{-0.002}$ | R |
| Thickness of lip | 0.020 in. | ± 0.002 | |
| Height of projection above lip | | | |
| Top end cap | 0.510 in. | ± 0.003 | |
| Bottom end cap | 0.300 in. | ± 0.003 | |
| Height of lip | 0.250 in. | $^{+0.000}_{-0.010}$ | |
| Minimum cap thickness dimension | 0.150 in. | $^{+0.005}_{-0.008}$ | R |

VII. SURFACE FINISH AND CONDITION:

Surfaces of the top and bottom end caps shall conform to the finishes specified on Dwg. B-2-02-054-9815-D. R

All surfaces shall be free of cracks, pits, laps, seams, gouges, and intergranular attack.

Surfaces shall be free of scale, oxide film, dirt, oil, grease, or other foreign material.

VIII. ACCEPTANCE TESTS:

A. Nondestructive

1. Visual. - One hundred percent visual inspection shall be performed under direct daylight-type fluorescent lighting of at least 100 footcandles to ensure conformance with the requirements of Section VII of this specification.

2. Dimensional. - One hundred percent dimensional inspection shall be performed to ensure conformance to the requirements of Section VI of this specification. Two diametral measurements, 90 deg apart, shall be made of the end cap diameter and on the diameter of the end cap projection.

*A diameter of 0.195 to 0.206 in. is permitted if it does not extend higher than the lip. N

Subject: SPECIFICATION FOR TOP AND BOTTOM END CAPS FOR CORE I FUEL ASSEMBLIES FOR THE EXPERIMENTAL GAS-COOLED REACTOR

VIII. ACCEPTANCE TESTS (continued):

3. Liquid Penetrant. - One hundred percent liquid-penetrant inspection for discontinuities shall be performed over the entire surface of the finished end caps in accordance with ASTM Designation: E 165 – 60 T, "Methods for Liquid Penetrant Inspection," except as follows:

Precleaning shall be accomplished by vapor degreasing.

"Method A, Procedure A-2" shall be followed except as modified by this specification.

Minimum penetrant soak time shall be 30 min.

Emulsification time shall be held to the minimum required to permit removal of excess penetrant and shall not exceed 3 min.

Drying shall be accomplished by circulating air at 170°F or less for a time that will not cause evaporation of penetrant.

Dry-powder developer shall be used. The powder shall remain on the part for a minimum of 10 min prior to inspection.

Magnaflux ZL 22 penetrant or equivalent shall be used. "Equivalents" shall be approved by the company.

All penetrant indications shall be investigated. All discontinuities detected by penetrant inspection shall be removed. Caps must comply with dimensional tolerances after the indications have been removed.

Reinspection after removal of defects is required.

B. Destructive

The bar stock from which the end caps are fabricated shall be sampled in accordance with the latest revision of ASTM Designation A 276 for use in chemical analysis and physical tests to assure conformance of the finished pieces with Sections IV, V, and VII of this specification.

IX. TEST REPORTS:

Four certified copies of test reports shall be furnished by the seller to the company at the time of shipment. At the time of shipment, the seller shall also furnish to the company four copies of a certification stating that all requirements of this specification have been met.

Subject: SPECIFICATION FOR URANIUM DIOXIDE FUEL PELLETS FOR CORE I FUEL ASSEMBLIES FOR THE EXPERIMENTAL GAS-COOLED REACTOR

I. SCOPE:

This specification defines hollow fuel pellets made of uranium dioxide. The pellets are approximately 3/4 in. long, 0.7-in. OD with an 0.2-in. wall thickness and are dished at each end to a depth of 0.005 in. as shown in the referenced drawing. The pellets shall be furnished in enrichments of 2.46%. A total of approximately 37,850 lb of uranium dioxide pellets is required. R

The uranium dioxide pellets shall be furnished in stacks consisting of 36 uranium dioxide pellets and two magnesia insulators, one at each end of the stack.

II. MATERIALS:

The company shall supply to the seller the uranium hexafluoride to complete the full core loading (approximately 49,300 lb $UF_6$) plus a 10% surplus (4,930 lb $UF_6$). R

The seller shall pay for all uranium metal losses exceeding 1% of the total quantity processed; i.e., any uranium metal losses exceeding approximately 325 lb.

The seller shall pay the cost of reprocessing all scrap material (to $UF_6$) exceeding 1% of the total quantity processed. This cost shall also include the cost of transportation. R

The uranium hexafluoride will be enriched to the specified amounts ± 0.013% by weight in $U^{235}$. The seller's conversion and fabrication processes shall be such that the isotopic composition of the finished uranium dioxide fuel pellets shall not differ from that of the uranium hexafluoride by more than 1.5% of the contained amount.

III. REFERENCE:

Dwg. B-2-02-054-9820-B, "$UO_2$ Pellet" R

TID – 7015, Section I, "ORNL Master Analytical Manual"*

Analytical Chemistry, 32, 610 (1960), "Determination of O/U Ratio in $UO_2$," H. Kubota

*This document is available from the Offices of Technical Services, Department of Commerce, Washington 25, D. C.

Subject: SPECIFICATION FOR URANIUM DIOXIDE FUEL PELLETS FOR CORE I FUEL ASSEMBLIES FOR THE EXPERIMENTAL GAS-COOLED REACTOR

IV. MANUFACTURING REQUIREMENTS:

The uranium dioxide pellets shall be manufactured in accordance with Dwg. B-2-02-054-9820-B, "$UO_2$ Pellet," and with this specification. R

V. CHEMICAL COMPOSITION:

The finished fuel pellets shall conform to the following chemical analysis:

| | |
|---|---|
| Total Uranium | Not less than 88.0 wt % |
| Carbon | 500 ppm (max) |
| Nitrogen | 500 ppm (max) |
| Calcium | 100 ppm (max) |
| Aluminum | 100 ppm (max) |
| Silicon | 100 ppm (max) |

The sum of the following impurities shall not exceed the equivalent thermal-neutron capture cross section of 20 ppm of boron:

| | |
|---|---|
| Boron | Gadolinium |
| Cadmium | Europium |
| Silver | Samarium |

A coefficient of boron equivalent (CBE) may be calculated for the above elements as follows:

$$CBE = \frac{(\text{atomic weight boron}) \times (\sigma_a \text{ impurity})}{(\text{atomic weight impurity}) \times (\sigma_a \text{ boron})}$$

$\sigma_a$ is defined as: thermal-neutron absorption cross section.

The following list contains boron equivalent coefficients for the high cross-section impurities listed above:

| | | | |
|---|---|---|---|
| Boron | 1.0 | Gadolinium | 4.191 |
| Silver | $8.9 \times 10^{-3}$ | Europium | 0.434 |
| Cadmium | 0.325 | Samarium | 0.524 |

The oxygen-to-uranium ratio of the finished fuel pellets shall be within the range 2.00 to 2.02.

VI. DENSITY:

The minimum bulk density of the fuel pellet shall be 94% of theoretical density for uranium dioxide bodies. Using a theoretical density of 10.96 g/cm$^3$, the minimum bulk density of the fuel pellet shall be 10.30 g/cm$^3$.

Subject: SPECIFICATION FOR URANIUM DIOXIDE FUEL PELLETS FOR CORE I FUEL ASSEMBLIES FOR THE EXPERIMENTAL GAS-COOLED REACTOR

VII. DIMENSIONAL:

The fuel pellet shall conform to the following dimensional tolerances:

| | | |
|---|---|---|
| Outside diameter | 0.707 in. ± 0.001 | |
| Inside diameter | 0.323 in. ± 0.005 | |
| Wall thickness | 0.192 in. ± 0.015 | |
| Length | 0.740 in. nominal | |
| Major diameter of dished area | 0.600 in. minimum | R |
| Depth of dished area at inside diameter of pellet | 0.005 in. $^{+0.009}_{-0.002}$ | R |

Each fuel pellet face shall be perpendicular with the fuel pellet outside surface within 0.005 in., except for the dished area on each end of type A pellets; on type B pellets the shape of the ends shall be as shown in Dwg. B-2-02-054-9820-B. R

The total length of the column of uranium dioxide fuel pellets shall be 26.625 in. $^{+0.000}_{-0.060}$.

The total length of the column of uranium dioxide fuel pellets and the two magnesia pellets (one at each end of the stack) shall be 27.000 in. ± 0.010. To achieve the narrower length tolerance, the magnesia pellets shall be in four thicknesses for selectivity.

The seller has the option of cutting one pellet in each stack to a nonstandard length and one dished end on the cut pellet is permissible. N

VIII. DRYNESS:

The finished pellets shall be sufficiently dry so that, when heated for 4 hr under vacuum at 250°C, the weight loss shall not exceed 10 ppm. The pressure inside the oven shall not exceed 1000 μ.

IX. WEIGHT:

The weight of each stacked length of fuel pellets shall be 1411 g ± 33.

X. SURFACE FINISH AND CONDITION:

A. Chipping

Chipping on the outside cylindrical surface shall not exceed 10% of the outside cylindrical surface area. Chipping on each end of the pellet shall not exceed 25% of the surface area of one end of the pellet. No chip shall be greater than 1/8 in. in lateral dimension nor greater than 1/32 in. in depth.

Subject: SPECIFICATION FOR URANIUM DIOXIDE FUEL PELLETS FOR CORE I FUEL ASSEMBLIES FOR THE EXPERIMENTAL GAS-COOLED REACTOR

X. SURFACE FINISH AND CONDITION (continued):

The cylindrical surface on the inside diameter shall not be inspected for chipping.

B. Cracks

Radial cracks exceeding 25% of the wall thickness shall be cause for rejection. One radial crack shall be permitted through the pellet provided it is the only crack on the pellet. Radial cracks are defined as cracks observed at the end or ends of the pellet which are in a radial direction. R

Circumferential cracks shall be cause for rejection if the crack is continuous over an arc of 45 deg or more. A circumferential crack is defined as a crack observed at the end of the pellet or on the circumferential surface and running parallel to the circumference or perpendicular to a radial direction. A circumferential crack of 180 deg shall be allowed provided no more than one crack per pellet exists and that this crack is located in the center one third of the pellet. R

C. Sponginess or Microcracking

Excessive sponginess or microcracking, as illustrated in Fig. 4, shall be cause for rejection.

D. Visual Standards

Two groups of pellets typical of production quality shall be mutually selected by the seller and the company for use as visual standards. The two groups shall be duplicates as nearly as is practical. One group shall be retained by the seller and one by the company. These pellets shall include the types of defects to be expected during manufacture of the core loading and will be labeled "acceptable" or "unacceptable." The seller's group of pellets, or visual standards, shall be used as guides during visual inspection for surface finish and condition.

XI. ACCEPTANCE TESTS:

A. Nondestructive

1. Visual. - The fuel pellets shall be subjected to 100% visual inspection to assure conformance with Section X of this specification. The inspection shall be performed under direct daylight-type fluorescent illumination of at least 100 footcandles.

Subject: SPECIFICATION FOR URANIUM DIOXIDE FUEL PELLETS FOR CORE I FUEL ASSEMBLIES FOR THE EXPERIMENTAL GAS-COOLED REACTOR

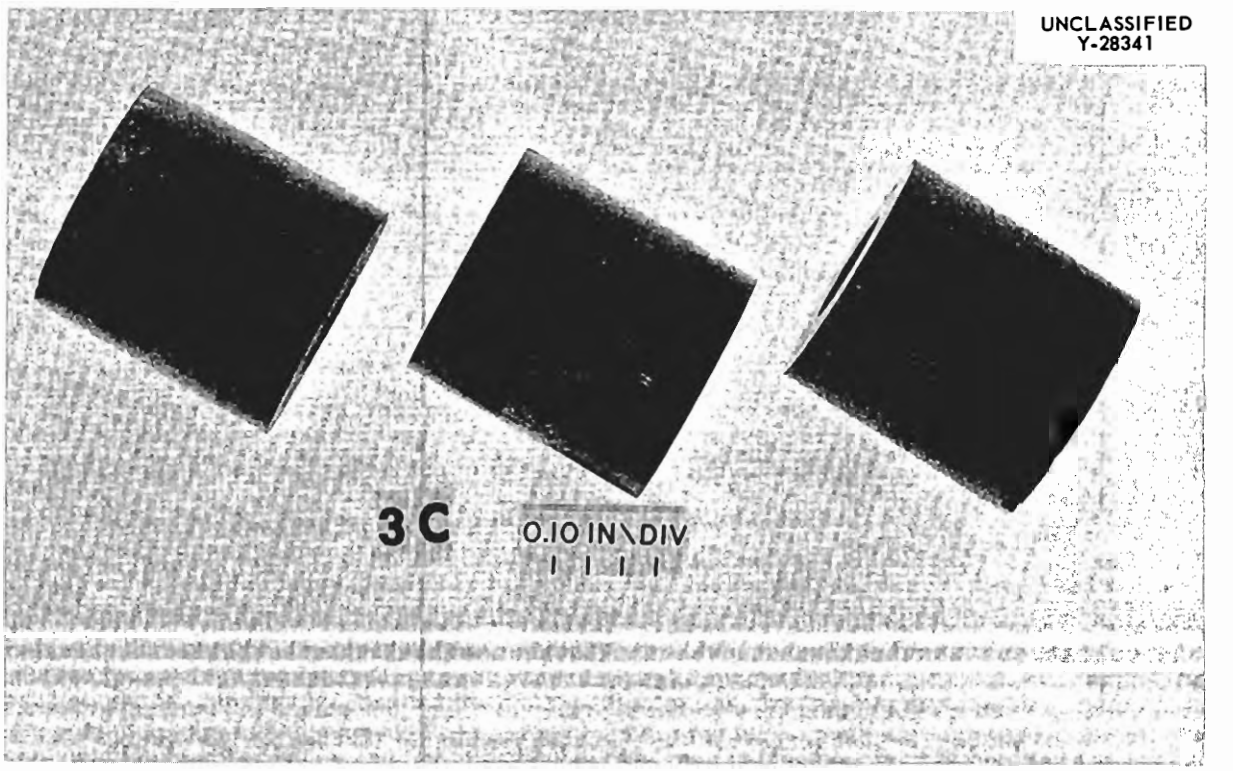


Fig. 4. Photograph of $UO_2$ Fuel Pellets Illustrating Excessive Sponginess and Microcracking. The pellet on the left is acceptable. The pellet on the right in the photograph is unacceptable. The pellet in the center is borderline, but is also unacceptable.

Subject: SPECIFICATION FOR URANIUM DIOXIDE FUEL PELLETS FOR CORE I FUEL ASSEMBLIES FOR THE EXPERIMENTAL GAS-COOLED REACTOR

XI. ACCEPTANCE TESTS (continued):

2. Dimensional. - One percent of each day's production of pellets, randomly selected, shall be dimensionally inspected to assure conformance to Section VII of this specification. If any of these pellets do not meet dimensional tolerances, the entire day's production shall be 100% dimensionally inspected. R

   Each stacked column of uranium dioxide shall be measured for length and weighed to assure conformance to specified stack length and weight as specified in Sections VII and IX, respectively, of this specification.

3. Density. - One pellet from each boat of pellets, selected randomly, shall be measured and weighed to determine bulk density. If any of these pellets do not meet the density as specified in Section VI of this specification, every pellet from that boat load* shall be subjected to density determination and shall be accepted or rejected accordingly. R

4. Dryness. - One percent of the finished pellets shall be selected randomly for dryness tests prior to packaging. The dryness test shall consist of heating the pellets to 250°C for 4 hr under vacuum. The pressure inside the oven shall not exceed 1 mm Hg. The pellets shall be weighed in groups before and after heating. The weighings shall be performed with the pellets at room temperature. The size of each group shall not be less than 10 nor more than 100 pellets.

   If the weight loss for each group of pellets from one dryness testing oven lot does not exceed 10 ppm, all pellets represented by that dryness testing oven lot shall be accepted. If the weight loss of any of the weighing groups in a dryness testing oven lot is greater than 10 ppm, the pellets represented by that dryness testing oven lot shall be rejected unless the seller is able to demonstrate a 95-95% confidence level that the pellets meet the dryness requirements in Section VIII of this specification. The seller shall demonstrate this confidence level by conducting sufficient additional dryness tests.

B. Destructive

1. Oxygen-to-Uranium Ratio, Total Uranium, Carbon, and Nitrogen. -

   a. Sampling: Two pellets shall be selected randomly from each of the first 10 boat loads for determination for R

*A boat load is that quantity of pellets in the sintering zone of the furnace at one time. R

Subject: SPECIFICATION FOR URANIUM DIOXIDE FUEL PELLETS FOR CORE I FUEL ASSEMBLIES FOR THE EXPERIMENTAL GAS-COOLED REACTOR

XI. ACCEPTANCE TESTS (continued):

oxygen-to-uranium ratio, total uranium, carbon, and nitrogen. At least one analysis shall be performed on each of the two pellets.

If the above sampling shows that the pellets meet the specification, the sampling shall be reduced so that three pellets shall be taken from each blending batch.* One pellet each shall be taken from the beginning, middle, and end of each blending batch. Duplicate samples from each of these pellets shall be sent to the company for testing. If any of the three pellets from each blending batch fail to meet the specification, sampling shall revert to the original cycle (i.e., 10 consecutive furnace lots shall be sampled). N

b. Method of Analysis: The oxygen-to-uranium ratio shall be determined by the polarographic method referenced in Section III of this specification or by an approved alternate method.

Total uranium shall be determined by the potentiometric or volumetric methods according to procedures recommended by the company** or by an approved alternate method. R

c. Qualification of Seller's Analytical Procedure: Standard samples will be furnished to the seller by the company for qualification of the seller's analytical procedure. This qualification shall be prerequisite to committing the $UF_6$ to manufacture.

---

*A blending batch is defined as that quantity of uranium dioxide powder that is blended together so that the chemical and isotopic compositions may be assumed to be nearly identical.

**Three suitable methods for the determination of the uranium content of uranium dioxide are found in the ORNL Master Analytical Manual, published as TID-7015, Section I. The methods are:

No. 900719270, Uranium, Volumetric Zinc Amalgam—Potassium Dichromate Method
No. 900719222, Uranium, Potentiometric Ferric Sulfate Method
No. 900719224, Uranium, Automatic Potentiometric Ferric Sulfate Methods

Subject: SPECIFICATION FOR URANIUM DIOXIDE FUEL PELLETS FOR CORE I FUEL ASSEMBLIES FOR THE EXPERIMENTAL GAS-COOLED REACTOR

XI. ACCEPTANCE TESTS (continued):

d. Acceptance or Rejection: If the oxygen-to-uranium ratio and total uranium content do not meet the requirements specified in Section V of this specification, the entire blending batch of sintered pellets shall be rejected unless the seller performs additional analyses sufficient to assure a 95-95% confidence level that the pellets are within the limits specified. R

2. Isotopic and Impurity Analyses. -

a. Sampling: One finished pellet representing each blending batch of uranium dioxide powder shall be selected randomly for isotopic analysis. If the seller so desires, the company shall perform isotopic analyses on a maximum of 50 fuel pellets at no charge to the seller. The company shall advise the seller of the test results within five working days of the time the sample is received in Oak Ridge, Tennessee. If more than 50 isotopic analyses are required (see Paragraph b below), the company shall perform these analyses at a cost to the seller of $25.00 per analysis for each analysis in excess of 50. N

The seller shall perform impurity analyses on one finished pellet selected randomly from each blending batch of uranium dioxide powder. N

An alternate sampling plan may be used in which 5% of the product will be selected for destructive testing. The product to be tested shall be selected so that an equal number of test specimens is selected from each blending batch. N

b. Acceptance or Rejection: If the isotopic and impurity analyses do not conform to the limits specified in Sections II and V, respectively, of this specification, all the pellets fabricated from that entire batch of powder shall be rejected unless the seller performs additional analyses sufficient to assure a 95-95% confidence level that the pellets are within the limits specified.

Subject: SPECIFICATION FOR URANIUM DIOXIDE FUEL PELLETS FOR CORE I FUEL ASSEMBLIES FOR THE EXPERIMENTAL GAS-COOLED REACTOR

XII. TEST REPORTS:

Four certified copies of dryness test reports shall be furnished to the company prior to encapsulation of the pellets. Four copies of certified chemical analyses for oxygen-to-uranium ratio and total uranium and density determinations shall be furnished for each furnace lot of sintered pellets. The analyses and density determinations shall be performed as described in Section XI-B-1 of this specification.

Four copies of certified chemical analyses for impurities and isotopic analysis for $U^{235}$ content shall be furnished to the company prior to shipment for one pellet from each blended batch of uranium dioxide powder.

The seller shall furnish to the company prior to encapsulation of the pellets four copies of a certification stating that all requirements of this specification have been met.

XIII. SAMPLE PELLETS:

Two finished pellets representing each blending batch of material shall be furnished to the company for evaluation purposes.

XIV. PACKING AND SHIPPING:

Each stacked column of fuel along with top and bottom magnesium oxide pellets shall be inserted into a length of type 304 stainless steel fuel capsule tubing with the cap already welded into the bottom end. The top end of the tubing shall be sealed with a plastic cap or a similar device that will prevent contamination of the area to be welded. The entire length of tubing shall be sealed in an individual moisture-proof container containing a desiccant. The tube shall be clearly marked to identify the enrichment of fuel contained therein. The marking shall be temporary such as a nonsulfur-bearing ink or a sticker.

EGCR FUEL ASSEMBLY SPECIFICATION
METALS AND CERAMICS DIVISION
OAK RIDGE NATIONAL LABORATORY

Union Carbide Nuclear Company
A Division of Union Carbide Corporation
Oak Ridge, Tennessee

Spec. No. EGCR-2-1-4
Date: Nov. 1, 1960
Rev. No.
Page: 1 of 2

Subject: SPECIFICATION FOR MAGNESIUM OXIDE PELLETS FOR CORE I FUEL ASSEMBLIES FOR THE EXPERIMENTAL GAS-COOLED REACTOR

I. SCOPE:

This specification defines magnesium oxide pellets 0.7 in. in diameter. The pellets shall be in four thicknesses of approximately 3/16 in.

II. MANUFACTURING REQUIREMENTS:

The magnesium oxide pellets shall be manufactured in accordance with Dwg. B-2-02-054-9819-B and with this specification.

III. REFERENCES:

Dwg. B-2-02-054-9819-B, "Magnesium Oxide Pellet"

IV. CHEMICAL COMPOSITION:

The material shall conform to the following analysis:

| | | | |
|---|---|---|---|
| $SiO_2$ | 0.2 wt % (max) | Fe | 0.1 wt % (max) |
| $Al_2O_3$ | 0.35 wt % (max) | CaO | 0.2 wt % (max) |
| B | 20 ppm (max) | MgO | Remainder |

V. DENSITY:

The pellets shall be sintered to a density of 2.6 g/cm$^3$ ± 0.6.

VI. DIMENSIONAL TOLERANCES:

Diameter 0.705 in. ± 0.003

Thickness (the pellets shall be furnished in four thicknesses).

0.188 in. $^{+0.000}_{-0.005}$

0.198 in. $^{+0.000}_{-0.005}$

0.208 in. $^{+0.000}_{-0.005}$

0.218 in. $^{+0.000}_{-0.005}$

Subject: SPECIFICATION FOR MAGNESIUM OXIDE PELLETS FOR CORE I FUEL ASSEMBLIES FOR THE EXPERIMENTAL GAS-COOLED REACTOR

VII. CLEANLINESS:

The pellets shall be clean and free of moisture, dirt, grease, oil, or fabrication lubricants.

VIII. SURFACE CONDITION:

The surfaces shall be free of cracking or chipping as determined by visual inspection.

IX. TEST REPORTS:

The seller shall furnish to the company four copies of certified chemical analyses of finished pellets. At the time of shipment, the seller shall also furnish to the company four copies of a certification stating that all requirements of this specification have been met.

Subject: SPECIFICATION FOR FUEL ELEMENT SPACERS FOR CORE I FUEL ASSEMBLIES FOR THE EXPERIMENTAL GAS-COOLED REACTOR

I. SCOPE:

This specification defines spacers for fuel elements for the EGCR. The spacers are made of type 304 stainless steel.

II. MANUFACTURING REQUIREMENTS:

The spacers shall be manufactured in accordance with Dwg. B-2-02-054-9817-E and as outlined in this specification. R

The spacers shall be fabricated by machining from a casting, wrought bar stock, or tubing. (Editor's note: spacers were machined from bar and tubing.)

III. REFERENCES:

Dwg. B-2-02-054-9817-E "Fuel Element Spacers" R

ASTM Designation: A 276 – 57 T, "Specification for Hot-Rolled and Cold-Finished Corrosion-Resisting Steel Bars"

ASTM Designation: A 351 – 58 T, "Tentative Specifications for Ferritic and Austenitic Steel Castings for High Temperature Service"

ASTM Designation: E 165 – 60 T, "Methods for Liquid Penetrant Inspection"

ASTM Designation: E 142 – 59 T, "Tentative Method for Controlling Quality of Radiographic Testing"

IV. CHEMICAL COMPOSITION:

The chemical composition shall conform to the latest revision of ASTM Designation: A 276, type 304 (wrought bar stock) or ASTM Designation: A 351, grade CF 8, respectively. The steel shall also conform to the following impurity content requirements on a weight basis:

Cobalt – 0.2% (max)

Boron – 10 ppm (max)

V. PHYSICAL AND MECHANICAL PROPERTIES:

Depending upon the method of fabrication, the physical and mechanical properties shall conform to the requirements of the latest revision of ASTM Designation: A 276 (wrought bar stock), ASTM Designation: A 213 (seamless tubing), or ASTM Designation: A 351, grade CF 8, respectively. R

Subject: SPECIFICATION FOR FUEL ELEMENT SPACERS FOR CORE I FUEL ASSEMBLIES FOR THE EXPERIMENTAL GAS-COOLED REACTOR

VI. DIMENSIONAL TOLERANCES:

The spacer shall conform to the dimensions and tolerances specified on Dwg. B-2-02-054-9817-E except that the functional check given on Dwg. C-47967, "Fuel Element Tube Subassembly," may be used. N

VII. SURFACE FINISH AND CONDITION:

Surfaces of the spacer shall conform to the finishes specified on Dwg. B-2-02-054-9817-E. All surfaces shall be free of scale, oxide film, dirt, oil, grease, or other foreign material. Surfaces shall also be free of cracks, laps, seams, gouges, and intergranular attack. R

VIII. ACCEPTANCE TESTS:

A. Nondestructive

1. Visual. - One hundred percent visual inspection shall be performed under daylight-type fluorescent lighting of at least 100 footcandles to ensure conformance with the requirements of Section VII of this specification.

2. Radiography. - Radiography is not required if the spacers are manufactured from wrought bar stock.

   If the spacers are cast, radiographic inspection shall be performed on each piece in accordance with the latest revision of ASTM Designation: E 142.

   The level of radiography in the pad of the spacer shall be at least equivalent to 2-2T (i.e., a penetrameter providing 2% contrast sensitivity shall be present in each film). Thus, the penetrameter shall be 2% of the spacer thickness (0.005 in.) and shall contain a 2T-diam hole (0.010 in.).

   Multiple parts may be placed on the same film.

3. Dimensional. - One hundred percent dimensional inspection shall be performed to assure conformance with Section VI of this specification.

4. Liquid Penetrant. - A liquid-penetrant inspection for linear-type discontinuities shall be performed over the entire surface of 100% of the finished spacers in accordance with ASTM Designation: E 165 — 60 T, "Methods for Liquid Penetrant Inspection," except as follows:

   Precleaning shall be accomplished by vapor degreasing.

Subject: SPECIFICATION FOR FUEL ELEMENT SPACERS FOR CORE I FUEL ASSEMBLIES FOR THE EXPERIMENTAL GAS-COOLED REACTOR

VIII. ACCEPTANCE TESTS (continued):

"Method A, Procedure A-2" shall be followed except as modified by this specification.

Minimum penetrant soak time shall be 30 min.

Emulsification time shall be held to the minimum required to permit removal of excess penetrant and shall not exceed 3 min.

Drying shall be accomplished by circulating air at 170°F or less for a time that will not cause evaporation of penetrant.

A dry-powder developer shall be used. The powder shall remain on the part for a minimum of 10 min prior to inspection.

Magnaflux ZL 22 penetrant or equivalent shall be used. "Equivalents" shall be approved by the company.

All indications shall be evaluated by visual means in accordance with Section VIII-A-1 of this specification.

B. Destructive

Chemical analysis, physical testing, and metallographic examination shall be performed in accordance with the latest revision of ASTM Designation: A 276 to assure conformance of the finished pieces with Sections IV and V of this specification.

IX. TEST REPORTS:

Four certified copies of the test reports shall be furnished by the seller to the company at time of shipment. At the time of shipment, the seller shall also furnish to the company four copies of a certification stating that all requirements of this specification have been met.

Subject: SPECIFICATION FOR TOP SPIDERS AND LOWER SPIDERS FOR CORE I FUEL ASSEMBLIES FOR THE EXPERIMENTAL GAS-COOLED REACTOR

I. SCOPE:

This specification defines type 304 stainless steel top spiders and lower spiders.

II. MANUFACTURING REQUIREMENTS:

The top spiders and lower spiders shall be manufactured in strict conformance with Dwgs. B-2-02-054-9814-E and B-2-02-054-9816-C, respectively, and with this specification. R

The top spiders and lower spiders shall be manufactured by investment casting and machining where necessary to final dimensions.

III. REFERENCES:

ASTM Designation: A 351 – 58 T, "Tentative Specifications for Ferritic and Austenitic Steel Castings for High Temperature Service"

Dwg. B-2-02-054-9814-E, "Top Spider, Type I and Type II" R

Dwg. B-2-02-054-9816-C, "Lower Spider, Type I and Type II" R

ASTM Designation: A 370 – 61 T, "Methods and Definitions for Mechanical Testing of Steel Products"

ASTM Designation: E 165 – 60 T, "Method for Liquid Penetrant Inspection"

ASTM Designation: E 142 – 59 T, "Tentative Method for Controlling Quality of Radiographic Testing"

IV. CHEMICAL COMPOSITION:

The chemical composition of the austenitic stainless steel used shall conform to the requirements of the latest edition of ASTM Designation: A 351, grade CF 8. The steel shall also conform to the following impurity requirements on a weight basis:

Cobalt – 0.2% (max)

Boron – 10 ppm (max)

V. PHYSICAL PROPERTIES:

The physical properties of the austenitic stainless steel used shall conform to the requirements of the latest edition of ASTM Designation: A 351, grade CF 8.

Subject: SPECIFICATION FOR TOP SPIDERS AND LOWER SPIDERS FOR CORE I FUEL ASSEMBLIES FOR THE EXPERIMENTAL GAS-COOLED REACTOR

VI. MECHANICAL PROPERTIES:

The mechanical properties of the austenitic stainless steel used shall conform to the requirements of the latest edition of ASTM Designation: A 351, grade CF 8.

VII. DIMENSIONAL TOLERANCES:

The top spider shall conform strictly to the dimensions and tolerances specified in Dwg. B-2-02-054-9814-E. The lower spider shall conform strictly to the dimensions and tolerances specified in Dwg. B-2-02-054-9816-C.

A summary of the critical tolerances is presented below:

| | Top | Lower | |
|---|---|---|---|
| Radial Positioning of Holes | 0.993 in. ±0.002 | 0.993 in. ±0.002 | R |
| Diameter of Holes | 0.201 in. $^{+0.001}_{-0.000}$ | 0.201 in. $^{+0.001}_{-0.000}$ | R |
| Perpendicularity of Holes with Respect to Bottom of Casting | 90 deg ±0, 5 min | 90 deg ± 0, 5 min | R |
| Width of Positioning Projections, Type I | 0.115 in. $^{+0.002}_{-0.001}$ | 0.115 in. $^{+0.002}_{-0.001}$ | R |
| Width of Positioning Projections, Type II | 0.119 in. $^{+0.002}_{-0.001}$ | 0.125 in. $^{+0.002}_{-0.001}$ | R |
| Angular Location of Positioning Projections | 90 deg ±0 , 5 min | 60 deg ±0, 5 min | R |

VIII. SURFACE FINISH AND CONDITION:

The surfaces of the top spider and lower spider shall conform to the finishes specified on Dwgs. B-02-054-9814-E and B-2-02-054-9816-C, respectively. R

The surfaces shall be free of cracks. With the exception of the positioning tabs on the bottom spider, discontinuities other than cracks shall reject the spider if their area exceeds 10% of the minimum cross-sectional area. A defect up to 20% of the cross sectional area in the bottom spider position tabs shall be acceptable provided the defect is located no more than 0.075 in. from the outermost end of the tab. If the defect is located less than 0.075 in. from the outermost tab, the spider will be rejected if the defect exceeds 10% of the position tab thickness. R

Subject: SPECIFICATION FOR TOP SPIDERS AND LOWER SPIDERS FOR CORE I FUEL ASSEMBLIES FOR THE EXPERIMENTAL GAS-COOLED REACTOR

VIII. SURFACE FINISH AND CONDITION (continued):

The surface shall be free of scale, oxide film, dirt, oil, grease, or other foreign material as determined by visual inspection.

IX. ACCEPTANCE TESTS:

A. Nondestructive

1. Dimensional. - Each finished top spider and lower spider shall be subjected to dimensional inspection to assure that it conforms dimensionally to the drawing. The method of inspection to the above specified dimensions shall be approved by the company.

2. Visual. - Each finished top spider and lower spider shall be subjected to visual inspection to assure conformance to Section VIII of this specification. Inspection is to be performed under direct daylight-type fluorescent illumination of at least 100 footcandles.

3. Liquid Penetrant. - A liquid-penetrant inspection for linear-type discontinuities shall be performed over the entire surface of 100% of the finished spiders in accordance with recommendations of ASTM Designation: E 165 – 60 T, "Methods for Liquid Penetrant Inspection," except as follows:

a. Precleaning shall be accomplished by vapor degreasing.

b. "Method A, Procedure A-2" of ASTM Designation: E 165 – 60 T shall be followed except as modified by this specification.

c. Minimum penetrant soak time shall be 30 min.

d. Emulsification time shall be held to minimum required to permit removal of excess penetrant and shall not exceed 3 min.

e. Drying shall be accomplished by circulating air at 170°F or less for a period of time that will not cause evaporation of penetrant.

f. Dry-powder developer shall be used. The powder shall remain on the part a minimum of 10 min prior to inspection.

g. Magnaflux ZL 22 penetrant, or equivalent, shall be used. The "equivalents" shall be approved by the company.

Subject: SPECIFICATION FOR TOP SPIDERS AND LOWER SPIDERS FOR CORE I FUEL ASSEMBLIES FOR THE EXPERIMENTAL GAS-COOLED REACTOR

IX. ACCEPTANCE TESTS (continued):

h. Dye-penetrant indications will be evaluated as follows:

(1) All linear indications of dye (indications six times as long as they are wide), exclusive of machine marks, shall be investigated, reworked, and submitted for reinspection. R

(2) All penetrant indications other than linear shall be considered as visual defects. R

4. Radiography. - Radiographic inspection shall be performed according to the following sampling plan:

One hundred percent inspection shall be performed on the first 25 top spider castings and the first 25 lower spider castings. If none of the castings are rejected due to radiographic defects, the sampling shall be reduced to every fourth casting. If one or more of the first 25 castings are rejected due to radiographic examination, the 100% inspection shall be continued until 25 castings have been examined consecutively without rejection. At that time, the sampling shall be reduced to every fourth casting. If radiographic examination then reveals defects in any of these castings, sampling shall revert to the original cycle (i.e., 25 consecutive castings shall be radiographed).

Any spider which contains defects larger than that allowed in Section VIII of the specification shall be rejected. R

Radiographic inspection shall be performed in accordance with ASTM Designation: E 142 – 59 T at a level of 2-2T in the truncated cones of the castings. Multiple parts may be placed on the same film.

All castings which are radiographed shall be identified as shall the radiographic film so that a permanent record of all inspected castings may be kept. Radiographs are to become the property of the company.

B. Destructive

1. Chemical Analysis. - An analysis of each master blend of steel shall be made to determine the percentages of the elements prescribed in Section IV of this specification. This analysis shall be made from drillings taken not less than 1/4 in. beneath the surface of a test ingot obtained during the R

Subject: SPECIFICATION FOR TOP SPIDERS AND LOWER SPIDERS FOR CORE I FUEL ASSEMBLIES FOR THE EXPERIMENTAL GAS-COOLED REACTOR

IX. ACCEPTANCE TESTS (continued):

pouring of the heat. The chemical composition thus determined shall be reported to the company and shall conform to the requirements described in Section IV of this specification.

2. Tensile Tests. - One tension test shall be made from each heat in each heat-treatment charge. Test specimens shall be prepared and tension tests shall be performed in accordance with ASTM Designation: A 370, "Methods and Definitions for Mechanical Testing of Steel Products."

3. Metallographic Examination. - Metallographic examination at 100X shall be made of sections of five top spiders and five lower spiders selected at random. These examinations shall show the structure to be free from intergranular attack. If intergranular attack is present in any of the specimens, the entire lot of spiders shall be rejected unless the seller performs sufficient additional examinations to assure that 95% of the spiders are free of intergranular attack 95% of the time. The metallographic specimens shall be identified as to heat number and furnished to the company at time of shipment of the finished parts.

X. TEST REPORTS:

Four certified copies of test reports and photomicrographs of metallographic sections shall be furnished by the seller to the company at the time of each shipment. At the time of shipment, the seller shall also furnish to the company four copies of a certification stating that all requirements of this specification have been met.

Subject: SPECIFICATION FOR GRAPHITE SUPPORT SLEEVES FOR CORE I FUEL ASSEMBLIES FOR THE EXPERIMENTAL GAS-COOLED REACTOR

I. SCOPE:

This specification defines nuclear-grade, graphite support sleeves. The sleeves are approximately 29 in. long, approximately 5-in. OD, and 3-in. ID. The sleeves are a structural component of the fuel assembly and are used to house a seven-rod fuel element cluster.

II. MANUFACTURING REQUIREMENTS:

The graphite support sleeves shall be manufactured in accordance with Dwg. D-2-02-054-9812-H and with this specification. R

A. Materials

The material used for the sleeves shall be nuclear-grade graphite. The graphite shall be manufactured from a coke having a needle-type structure.

B. Manufacturing Process

The graphitizing temperature shall be not less than 2800°C. No Freon or chlorination treatment is required. Nuclear quality is to be assured by the proper selection of base materials and use of a graphitizing temperature sufficiently high to remove inherent impurities by volatilization.

The manufacturing process shall be such that lamination lines shall not be exposed on the cylindrical surface during subsequent machining.

III. REFERENCES:

Dwg. D-2-02-054-9812-H, "Type I and Type II, Support Sleeve" R

ASTM Designation: C 190 – 58 T, "Tensile Strength of Hydraulic Cement Mortars"

ASTM Designation: C 78 – 57 T, "Test for Flexural Strength of Concrete" (using simple beam with third-point loading)

IV. PHYSICAL PROPERTIES:

A. Graphite Density

Finished machined graphite conforming to this specification shall have a minimum average density for all support sleeves of 1.65 g/cm$^3$. The minimum acceptable density in any one graphite support sleeve shall be 1.60 g/cm$^3$.

Subject: SPECIFICATION FOR GRAPHITE SUPPORT SLEEVES FOR CORE I FUEL ASSEMBLIES FOR THE EXPERIMENTAL GAS-COOLED REACTOR

IV. PHYSICAL PROPERTIES (continued):

B. Nuclear Properties

The nuclear purity shall be measured by the DIH equivalent in the Hanford Test Reactor. For the standard specimen size and standard conditions of the Hanford test, the average DIH value for each graphitizing furnace lot* shall be +0.25 or greater. The samples for this measurement are described in Section VIII-B-3 of this specification.

V. MECHANICAL PROPERTIES:

The material from which the sleeve is fabricated shall comply with the following requirements:

| | | |
|---|---|---|
| A. Average tensile strength at 70°F: | | R |
| Parallel to axis of extrusion | 800 psi | R |
| Perpendicular to axis of extrusion | 600 psi | R |
| B. Average flexural strength at 70°F: | | R |
| Parallel to axis of extrusion | 1800 psi | |

VI. DIMENSIONAL TOLERANCES:

The support sleeve shall conform dimensionally to Dwg. D-2-02-054-9812-H. A summary of the critical tolerances is presented below:

| | | | |
|---|---|---|---|
| Bore Diameter | 3.000 in. | +0.008 −0.005 | R |
| Bore Straightness | 0.024 in. | maximum bow | R |
| Width of Slots, Bottom, Type I | 0.125 in. | +0.003 −0.002 | R |
| Width of Slots, Bottom, Type II | 0.133 in. | +0.005 −0.000 | R |
| Width of Slots, Top, Type I | 0.125 in. | +0.003 −0.000 | R |
| Width of Slots, Top, Type II | 0.125 in. | +0.007 −0.000 | R |
| Circumferential Position of Top and Bottom Slots | Given location with permissible angular variation of ±0 deg, 5 min | | |

*A graphitizing furnace lot is defined as that quantity of graphite contained in the furnace at one time during the graphitization process.

Subject: SPECIFICATION FOR GRAPHITE SUPPORT SLEEVES FOR CORE I FUEL ASSEMBLIES FOR THE EXPERIMENTAL GAS-COOLED REACTOR

VII. SURFACE FINISH AND CONDITION:

All surfaces will have a finish of 125 rms or better as determined by comparison to a standard agreed upon by the company and the seller. N

All surfaces shall be free of oil, grease, dirt, or other foreign materials.

A. Pits

Individual pits shall not exceed 1/8-in. diam or 1/8-in. depth. No pits shall be permitted on the seating area on each end of the sleeve. No pit shall be permitted in the shear pinholes or positioning slot if the functional requirements of the slots or holes are impaired.* R

B. Chips

Individual chips shall not exceed 1/16 in.$^2$ in area (i.e., 1/4 in. × 1/4 in., 1/8 in. × 1/2 in., or 1/16 in. × 1 in.) nor 0.090 in. in depth. No chips shall be permitted on the seating area on each end of the sleeve. Chips shall not be permitted in the shear pinholes or positioning slots if the functional requirements of the slots or holes are impaired.* R

VIII. ACCEPTANCE TESTS:

A. Nondestructive

1. Each support sleeve shall be dimensionally inspected to ensure conformance to Dwg. D-2-02-054-9812-H. R

2. Each support sleeve shall be visually inspected to assure conformance to Section VII of this specification. Visual examinations shall be made under direct daylight-type fluorescent illumination of at least 100 footcandles.

---

*The functional requirements of the shear pinholes shall be considered impaired if chips or pits are present in the inside counterbore of the hole or in the hole itself. Pits or chipping in the outside counterbore of the hole is permissible as defined in Paragraph A and B above. R

The functional requirements of the positioning slots shall be considered impaired if pits or chips reduce a vertical bearing surface by more than 20%. A vertical bearing surface here refers only to the portion of the vertical slot surface on which a positioning projection of a spider will actually bear (This may be determined by referring to Dwg. D-2-02-054-9822-E, "Fuel Assembly, Fuel Element and Support Sleeve." R

Subject: SPECIFICATION FOR GRAPHITE SUPPORT SLEEVES FOR CORE I FUEL ASSEMBLIES FOR THE EXPERIMENTAL GAS-COOLED REACTOR

VIII. ACCEPTANCE TESTS (continued):

3. Each support sleeve shall be weighed to verify density. The minimum acceptable weight for any sleeve is 20.82 lb. The minimum acceptable average weight for all sleeves is 21.46 lb.

4. A record of the graphitizing temperature shall be supplied by the seller for each furnace lot of graphite to determine compliance with the graphitizing temperature requirements of Section II-B of this specification.

B. Destructive

1. Tensile Tests. - A total of 24 specimens from each furnace lot of material shall be selected from different regions of the furnace for tensile tests. Tensile tests shall be performed on 12 specimens taken parallel to the direction of extrusion and on 12 specimens taken perpendicular to the direction of extrusion, except that no more than two pairs of specimens shall be taken from any graphitized piece in the furnace lot. Tensile tests shall be performed in accordance with ASTM Designation: C 190 – 58 T. If the average tensile strength fails to meet the requirements of Section V of this specification, the furnace lot shall be rejected unless the seller performs sufficient additional tests to demonstrate that 95% of the pieces meet the requirements 95% of the time.

2. Flexural Tests. - A total of 24 specimens from each furnace lot of material shall be selected from different regions of the furnace for flexural tests. The flexural strength shall be determined in accordance with ASTM Designation: C 78 – 57 T on specimens taken parallel to the direction of extrusion. Specimens shall be selected as in Section VIII-B-1 of this specification. If the average flexural strength fails to meet the requirements of Section V of this specification, the furnace lot shall be rejected.

3. Nuclear Properties. - The nuclear purity shall be determined in the Hanford Test Reactor equipped for these measurements. Three test specimens shall be taken from each furnace lot of graphite. Each test specimen shall be taken from a different region of the furnace.

Subject: SPECIFICATION FOR GRAPHITE SUPPORT SLEEVES FOR CORE I FUEL ASSEMBLIES FOR THE EXPERIMENTAL GAS-COOLED REACTOR

VIII. ACCEPTANCE TESTS (continued):

The test specimens shall be 4.187 in. ± 0.005 by 4.187 in. ± 0.005 by 49.150 in. ± 0.015. Surfaces shall have a finish of 125 rms or better. The test pieces shall be marked with the furnace lot number and the region of the furnace from which the specimens were taken.

The DIH values shall be measured in the Hanford Test Reactor at no cost to the seller. Results of the measurements on specimens shall be made available to the seller within two weeks after receipt of specimens by the Hanford Operation. Failure of any of the specimens to meet the requirements of Section IV-B of this specification shall cause rejection of the entire furnace lot.

The seller shall ship the DIH specimens to Hanford in accordance with instructions from the company. All transportation costs shall be for the account of the seller.

IX. MARKING AND PACKING:

A. Each sleeve shall be marked with the furnace lot number and a serial number. The size of the digits shall be approximately 1/2 in. × 1/2 in. × 0.040 in. R

B. Each support sleeve shall be packed in such a manner as to prevent damage and to maintain the cleanliness of the sleeve during handling and shipment.

X. TEST REPORTS:

Four certified copies of test reports shall be furnished by the seller to the company with each shipment. The test reports shall include a certification by the seller that all requirements of this specification were met.

Subject: SPECIFICATION FOR RECORDS TO BE KEPT ON CORE I FUEL ASSEMBLIES FOR THE EXPERIMENTAL GAS-COOLED REACTOR

I. SCOPE:

This specification defines the data that shall be recorded concerning fabrication history of the EGCR fuel assemblies and some of the component parts. The information on the records shall not be a condition of acceptance of the fuel assemblies unless otherwise required by the foregoing specifications; however, the keeping of records and the submission of these records to the company shall be a condition of acceptance of the fuel assemblies.

II. RECORDS REQUIRED:

The records to be kept are:

A. Data sheet for each fuel assembly

B. Data sheet for each fuel element

C. Data sheet for each top spider

D. Data sheet for each lower spider

E. Thermal trace for each furnace brazing lot of mid-plane spacers and fuel element tubes

F. Welding current, voltage trace, and travel speed for each bottom end cap weld

G. Welding current, voltage trace, and travel speed for each top end cap weld

III. SPECIFIC INFORMATION REQUIRED:

The information to be provided on each data sheet is tabulated below:

A. Fuel Assembly

1. Serial number of assembly - The serial number already on the top spider will become the serial number of the fuel assembly.

2. Serial number of lower spider

3. Furnace lot number and serial number of graphite sleeve R

4. Serial number of each fuel element and its position in the cluster with respect to the position of the serial number on the top spider

Subject: SPECIFICATION FOR RECORDS TO BE KEPT ON CORE I FUEL ASSEMBLIES FOR THE EXPERIMENTAL GAS-COOLED REACTOR

III. SPECIFIC INFORMATION REQUIRED (continued):

5. Signature and job title of person who recorded data

B. Fuel Element

1. Serial number - This shall be a temporary identification that may be removed after the identity of the fuel element is recorded in Section III-A-4 of this specification, (i.e., tape, nonsulfur-bearing ink, etc.).
2. Heat number and lot number of material from which the tube came
3. Heat number and lot number of material from which the top and bottom end caps were made
4. Heat number of material used for mid-plane spacer
5. Brazing furnace lot number
6. Weight of column of fuel pellets
7. Height of column of fuel pellets
8. Blending batch number of uranium dioxide powder used in pellets
9. Sintering furnace lot number of uranium dioxide pellets
10. Enrichment
11. Signature and job title of person who recorded data
12. Radiographs of end closure welds N
13. Inspection records on the rods (penetrant, leak check, visual, radiographic, and dimensional) N
14. Photograph of section taken for weld penetration N
15. Photographs taken of the brazing sections N

C. Top Spider

1. Serial number
2. Heat number
3. Radiographs N

D. Bottom Spider

1. Serial number
2. Heat number
3. Radiographs N

Subject: SPECIFICATION FOR RECORDS TO BE KEPT ON CORE I FUEL ASSEMBLIES FOR THE EXPERIMENTAL GAS-COOLED REACTOR

IV. RECORD SAMPLES REQUIRED: N

The following record samples will be retained by the seller and shipped to the company at the end of the contract: N

1. Ten tubes from each heat N
2. Ten end caps from each heat N
3. A top and lower spider from each heat N
4. Ten mid-plane spacers from each heat N
5. One graphite sleeve from each heat N
6. Ten flange bushings from each heat N
7. Ten end screws from each heat N
8. Ten MgO pellets from each lot N
9. Fifteen fuel pellets from each lot N
10. Scrap tube after sectioning of 1% of the welds N
11. Metallographic samples on 1% of the brazed tubes N

# EGCR FUEL ELEMENT DRAWINGS

| PARTS LIST | | |
|---|---|---|
| DWG. NO. | QTY. | NAME |

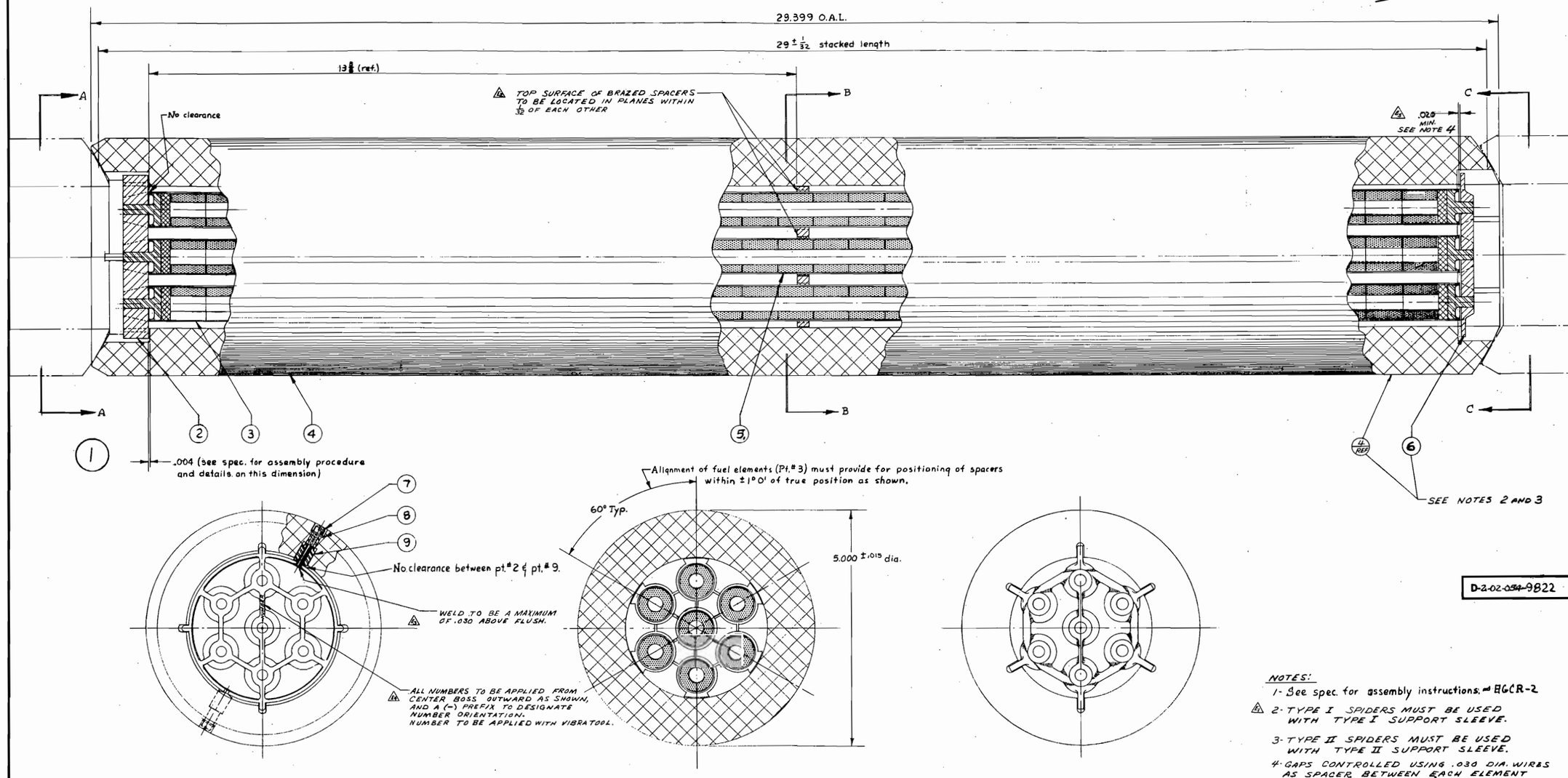


D-2-02-054-9822

NOTES:

1- See spec. for assembly instructions; HGCR-2

2- TYPE I SPIDERS MUST BE USED WITH TYPE I SUPPORT SLEEVE.

3- TYPE II SPIDERS MUST BE USED WITH TYPE II SUPPORT SLEEVE.

4- GAPS CONTROLLED USING .030 DIA. WIRES AS SPACER BETWEEN EACH ELEMENT AND BOTTOM OF SPIDER, PRIOR TO MAKING SPIDER WELDS

| Item | Dwg. No. | Qty. | Name | |
|---|---|---|---|---|
| 9 | B-9813 | 2 | Flanged Bushing | (Pt.#1) |
| 8 | " | 2 | Washer (Pt.#3) | |
| 7 | " | 2 | Screw (Pt.#2) | |
| 6 | B-9816 | 1 | Lower Spider | |
| 5 | C-9821 | 1 | Fuel Element | (Pt.#1) |
| 4 | D-9812 | 1 | Support Sleeve | |
| 3 | B-9821 | 6 | Fuel Element | (Pt.#2) |
| 2 | B-9814 | 1 | Top Spider | |
| 1 | | | Assembly | |

Parts List

| REVISION | | | BY | DATE | APP. |
|---|---|---|---|---|---|
| E. | CHANGE NOTICE 2223 | | GRH | 9/14/63 | [illegible] |
| D | CHANGE NOTICE 1729 | | JJT | 9/16/60 | [illegible] |
| C | change notice 1699 | | JJT | 8/30/60 | [illegible] |
| B | changed 29.000 to 29 ± 1/64 | | JJT | 8/30/60 | [illegible] |
| B | " 5.000 to 5.000 ± .015 dia. | | JJT | 8/30/60 | [illegible] |
| A | added "weld flush" | | JJT | 7/11/60 | [illegible] |
| A | added "no clearance between pt.#2 & pt.#9" | | JJT | 7/11/60 | [illegible] |
| A | added spacer alignment note, sect. B-B | | JJT | 7/11/60 | [illegible] |
| A | added .004 & note | | JJT | 7/11/60 | [illegible] |
| A | added "no clearance" | | JJT | 7/11/60 | [illegible] |
| A | deleted .010 top assy. changed .010 to .020 bottom | | JJT | 7/11/60 | [illegible] |
| A | added gen. note | | JJT | 7/11/60 | [illegible] |

EST WT. = 48.5 LBS.

| | |
|---|---|
| WESTINGHOUSE A.F.D. DWG. | 228-D-240 |
| REFERENCE DRAWINGS | DWG. NO. |

OAK RIDGE NATIONAL LABORATORY

Fuel Assembly
Fuel Element & Support Sleeve

| | | |
|---|---|---|
| ENGR. SUPT. | | |
| PROJECT ENGR. | | |
| DESIGN ENGINEER | | |
| DRAWN J. J. Tudor | 11/6/63 | 5/14/60 |
| CHECKED | | 6/1/60 |

UNLESS ALL SHARP EDGES BROKEN OTHERWISE SPECIFIED.
TOLERANCE UNLESS OTHERWISE SPECIFIED
FRACTIONS ± 1/64
DECIMALS ± .005
ANGLES ± 0°-15'
SCALE 1" = 1"

D-2-02-054-9822-E

| PARTS LIST | | | |
|---|---|---|---|
| ITEM NO. | DWG. NO. | QTY. | NAME |
| 1 | | 1 | Fuel Element |
| 2 | | 6 | " " |
| 3 | B-9819 | 2 | MgO Pellet |
| 4 | B-9820 | 36 | $UO_2$ Pellet |
| 5 | | | |
| 6 | | | |
| 7 | B-9815 | 1 | Bottom End Cap(Pt #2) |
| 8 | " | 1 | Top End Cap (Pt #1) |
| 9 | C-47967 | 1 | TUBE SUB-ASSEMBLY |

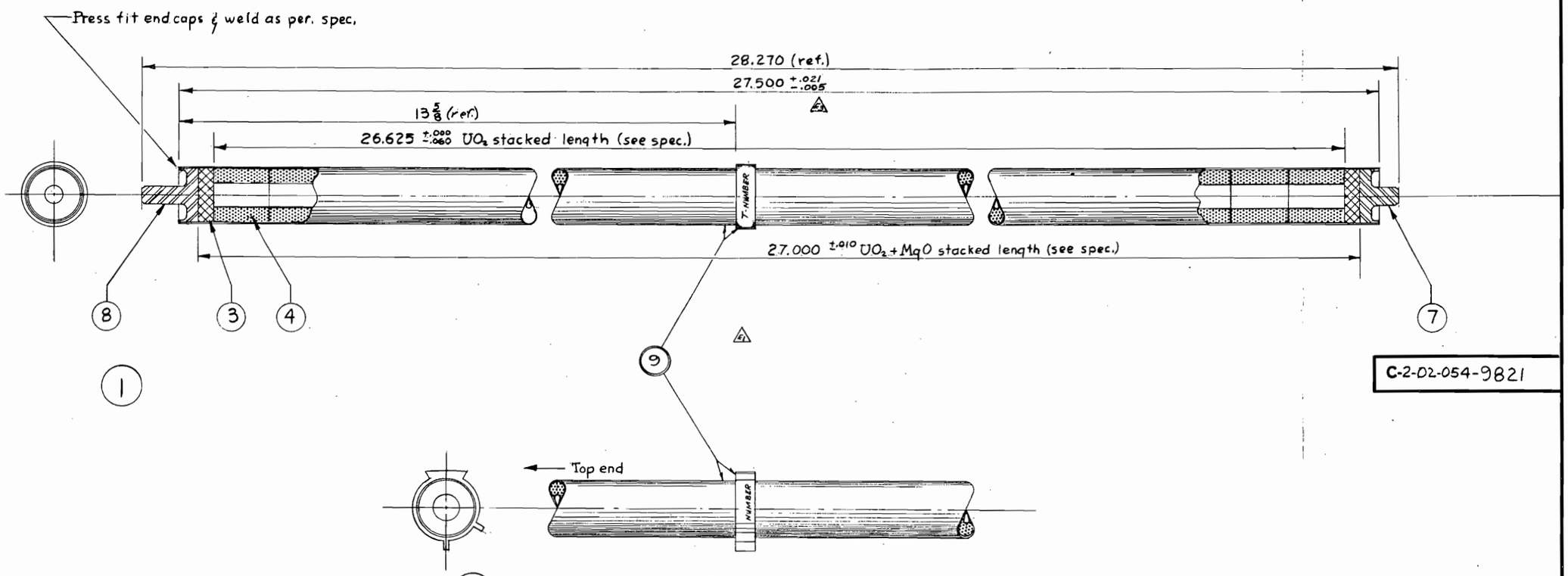


1. Fuel Element #2 same as Fuel Element #1 except for ring spacer as shown.
2. Note orientation of ring spacer to top end assembly.

Note: 1. Assembled fuel element to be straight within .030 per 3 ft. length
2. Spec. # EGCR-2-1

| | | | | |
|---|---|---|---|---|
| E | CHANGE NOTICE 2223 | GRH | 9/14/63 | |
| D1 | change notice 1724 | JJT | 9/10/60 | |
| C1 | change notice 1699 | JJT | 8/3/60 | |
| B | note reworded | JJT | 8/3/60 | |
| A | changed straightness tol. from .010 to .023 | JJT | 7/1/60 | |
| A | added 26.625 ±.000 ±.060 | JJT | 7/1/60 | |
| A | " 27,000 ±.010 | JJT | 7/1/60 | |
| A | Change 27.500 ±.008 ±.008 to 27.500 ±.015 ±.008 | JJT | 7/1/60 | |
| A | Add note 2, pt. #2 | JJT | 7/1/60 | |
| | REVISION | BY | DATE | APP. |

ENGR. SUPT. | ENGINEER
PROJECT ENGR. | DESIGN ENGINEER
DRAWN J. J. Tudor 5/16/60
CHECKED 6/1/60
11/18/63

BREAK ALL SHARP EDGES UNLESS OTHERWISE SPECIFIED.
TOLERANCE UNLESS OTHERWISE SPECIFIED:
FRACTIONS ± 1/64
DECIMALS ± .005
ANGLES ± 0°-15'
SCALE 1" = 1"

| WESTINGHOUSE A.F.D. DWG. | C-116-C-421 |
|---|---|
| Ass'y Fuel Element & Support Sleeve | D-9822 |
| REFERENCE DRAWINGS | DWG. NO. |

OAK RIDGE NATIONAL LABORATORY

Fuel Element

C-2-02-054-9821-E

B-2-02-054-9813-

(3) Special Flat Washer $\frac{9}{32}{}^{+0}_{-1/64}$ O.D. × $\frac{5}{32}$ I.D. × .032 Thick
(To fit #6 Machine Screw)

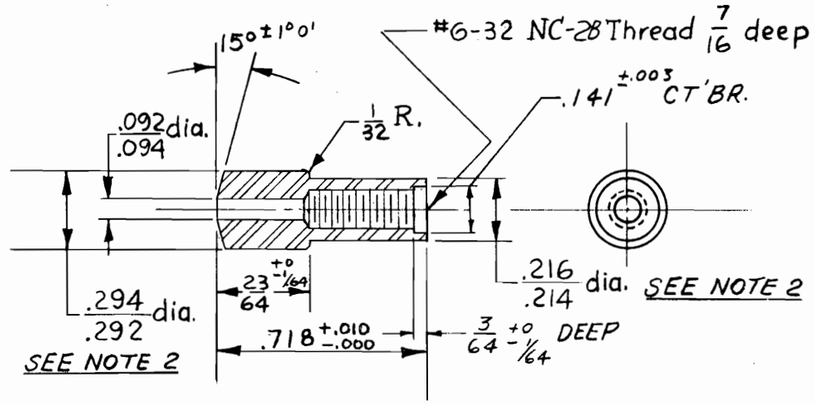


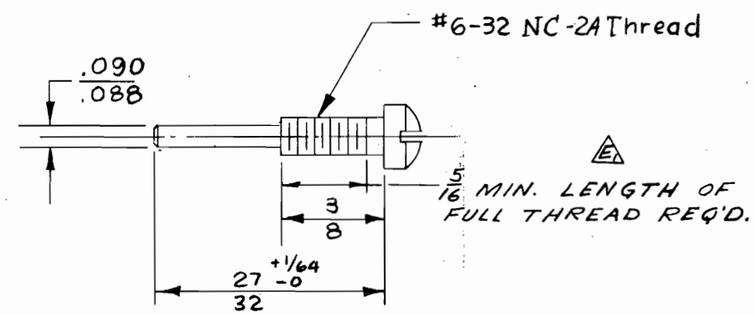


(1) 1. Break all sharp edges.
2. .294/.292 dia. & .216/.214 dia. to be concentric within .001 TIR.

(2) 1. Make from std. #6-32 filister hd. mach. screw.
2. .090/.088 dia. to be concentric with threads within .001 TIR.

Note: Material ~ Type 304 SS.
Spec. ~ EGCR-2-2

| | | | | |
|---|---|---|---|---|
| E | SEE DCN 2223 | GRH | 2-15-63 | |
| D | change notice 1909 | WMB | 6/5/61 | |
| C | CHANGE NOTICE 1699 | JJT | 8/9/60 | |
| B | thread class added | JJT | 8/3/60 | |
| B | added ±1°0' tol. to 15°∠ | JJT | 8/3/60 | |
| A | added material note | JJT | 7/1/60 | |
| A | add concentricity note to pt. #2 | JJT | 7/1/60 | |
| A | changed .748 +.010 -.000 to .718 +.010 -.000 | JJT | 7/1/60 | |
| | REVISION | BY | DATE | APP. |

| | | | |
|---|---|---|---|
| ENGR. SUPT. | | ENGINEER | |
| PROJECT ENGR. | | DESIGN ENGINEER | |
| | 1/18/63 | DRAWN J. J. Tudor | 5/20/60 |
| | | CHECKED | 6/1/60 |

BREAK ALL SHARP EDGES UNLESS OTHERWISE SPECIFIED.
TOLERANCE UNLESS OTHERWISE SPECIFIED:
FRACTIONS ± 1/64
DECIMALS ± .005
ANGLES ± 0°-15'

SCALE 2" = 1"

| WESTINGHOUSE A.F.D. DWG. | C-116-B-117 |
|---|---|
| Assy Fuel Element & Support Sleeve | D-9822 |
| REFERENCE DRAWINGS | DWG. NO. |

OAK RIDGE NATIONAL LABORATORY

Flanged Bushing & Screw

B-2-02-054-9813-E

B-2-02-054-9814

| TYPE Nº | DIM. "B" |
|---|---|
| I | .115 $^{+.002}_{-.001}$ |
| II | .119 $^{+.002}_{-.001}$ |

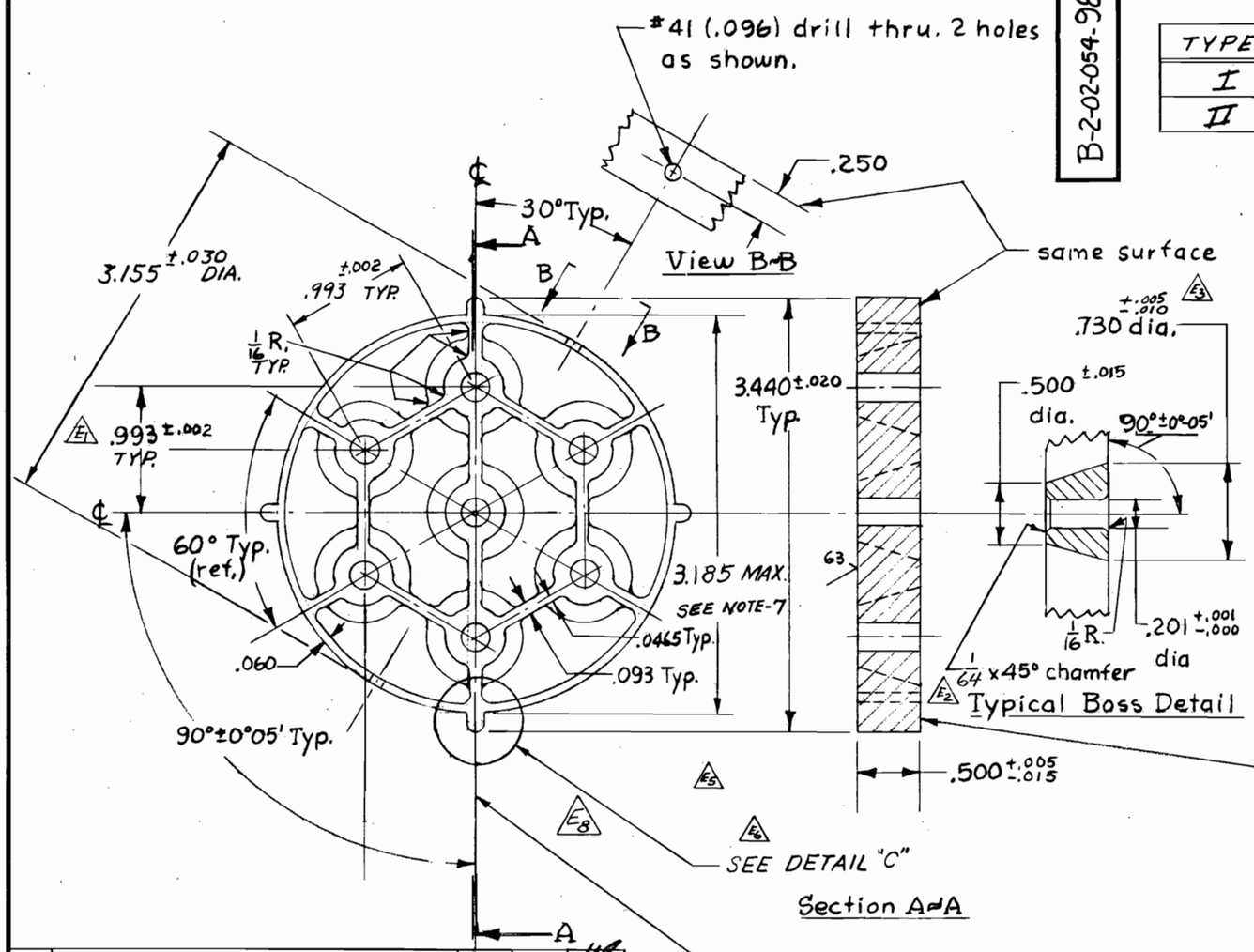


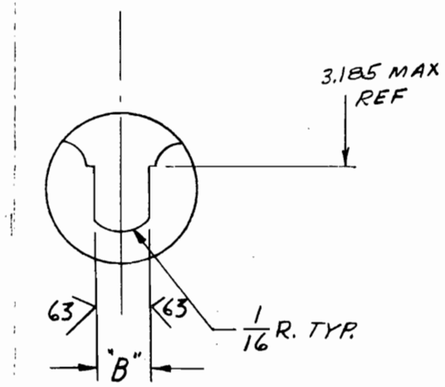


DETAIL C

Notes:

1. Surface roughness 125 rms or better unless otherwise specified.
2. Break sharp edges & corners.
3. Outer tabs are equally spaced & must not vary more than 0°-05' from true position.
4. .730 dia. & .201 dia. of Boss Detail to be concentric within .009
5. Material = Type 304 SS.
6. Spec. = EGCR-2-3
7. DO NOT MACHINE INTO RING.

| | | | | |
|---|---|---|---|---|
| E | SEE CHANGE NOTICE 2223 | GRH | 2-15-63 | |
| D1 | change notice 1699 | JJT | 8/3/60 | |
| C | added note 5 | JJT | 7/1/60 | |
| C | changed 3.140 ±.015 to 3.155 ±.030 | JJT | 7/1/60 | |
| C | changed 60° typ to 30° typ. | JJT | 7/1/60 | |
| C | changed .500 ±.010 to .500 ±.015 | JJT | 7/1/60 | |
| C | deleted 63 on bottom of spider | JJT | 7/1/60 | |
| C | Added 1/32 x 45° chamfer to boss detail | JJT | 7/1/60 | |
| C | changed .016 x 45° to 1/16 R | JJT | 7/1/60 | |
| C | changed .500 to .500 $^{+.005}_{-.015}$ | JJT | 7/1/60 | |
| B | Move Boss Detail | JJT | 6/28/60 | |
| A | Add .096 holes & view B-B | JJT | 5/28/60 | |
| | REVISION | BY | DATE | APP. |

| | | | | | |
|---|---|---|---|---|---|
| ENGR. SUPV. | | ENGINEER | | BREAK ALL SHARP EDGES UNLESS OTHERWISE SPECIFIED. | |
| PROJECT ENGR. | | DESIGN ENGINEER | | TOLERANCE UNLESS OTHERWISE SPECIFIED: FRACTIONS ± 1/64 DECIMALS ± .005 ANGLES ± 0°15' | |
| | 1/18/63 | DRAWN J. J. Tudor | 5/2/60 | | |
| | | CHECKED | 5/4/60 | SCALE 1" = 1" | |

| | |
|---|---|
| WESTINGHOUSE A.F.D. DWG. | C-116-C-401 |
| Ass'y Fuel Element & Support Sleeve | D-9822 |
| REFERENCE DRAWINGS | DWG. NO. |

OAK RIDGE NATIONAL LABORATORY

Top Spider
TYPE I AND TYPE II

B-2-02-054-9814-E

B-2-02-054-9816

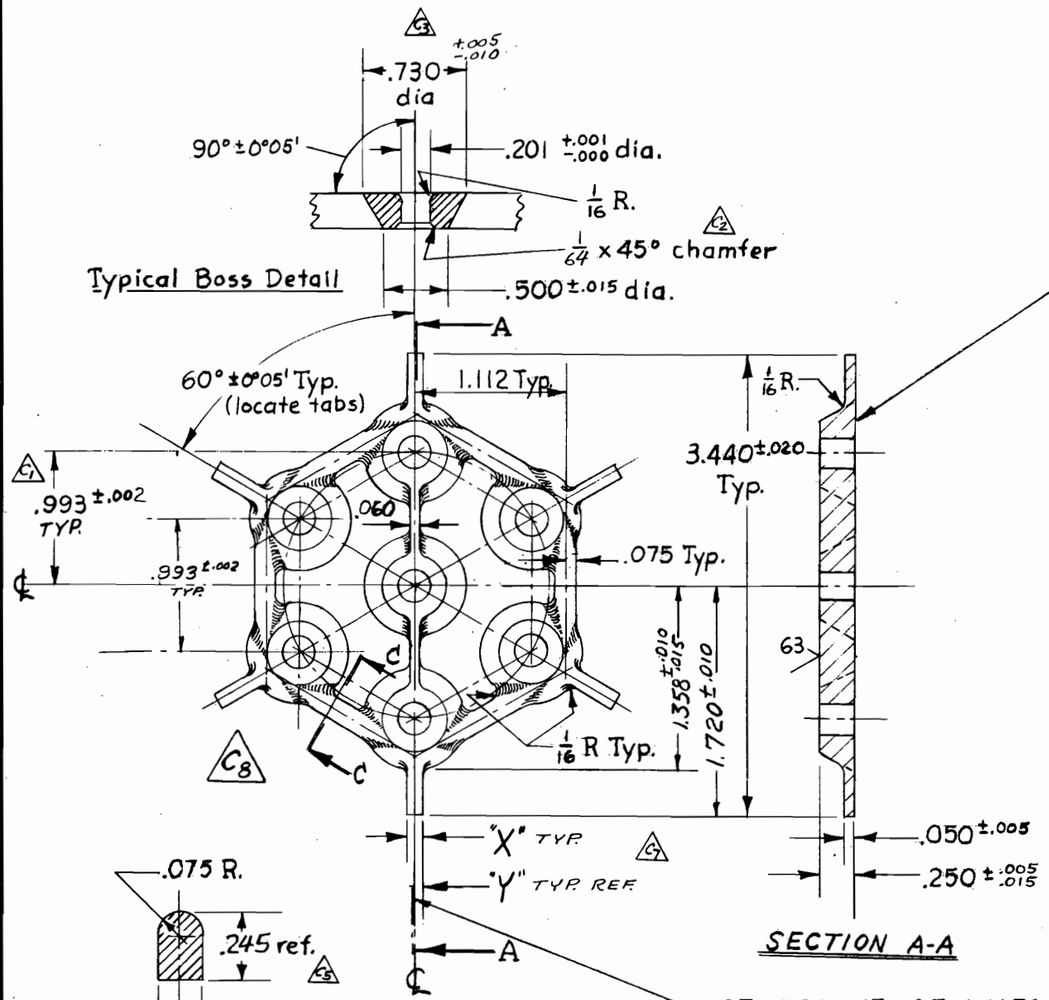


| TYPE Nº | DIM. "X" | DIM "Y" |
|---|---|---|
| I | .115 +.002 -.001 | .0575 |
| II | .125 +.002 -.001 | .0625 |

THIS SURFACE TO BE FLAT WITHIN .001 T.I.R. DO NOT MACHINE MORE THAN .020". DO NOT MACHINE INTO TAPERED PORTION OF THE BOSS.

Notes:

1. Surface roughness 125 rms or better unless otherwise specified.
2. Break sharp edges & corners.
3. Use 1/16 R. for all fillets
4. Outer tabs are equally spaced & must not vary more than 0°-05' from true position.
5. .730 dia. & .201 dia. of Boss Detail to be concentric within .009
6. Material ≈ Type 304 SS.
7. Spec. ≈ EGCR-2-3
8. MACHINING OF TOP OF WEB PERMITTED, BUT NOT TO EXCEED .002 IN DEPTH
9. CENTERLINE SHALL BE DETERMINED BY THE THREE (3) HOLES. TABS ARE LOCATED WITH RESPECT TO THIS CENTERLINE. OUTER TABS ARE EQUALLY SPACED AND MUST NOT VARY MORE THAN 0°5' FROM TRUE POSITION AFTER MACHINING.

CENTERLINE OF HOLES TO BE CONGRUENT WITH THE CENTERLINE OF TABS WITHIN .003.

| | | | | |
|---|---|---|---|---|
| WESTINGHOUSE A.F.D. DWG. | | | | C-116-C-400 |
| Ass'y Fuel Element & Support Sleeve | | | | D-9822 |
| REFERENCE DRAWINGS | | | | DWG. NO. |

| | REVISION | BY | DATE | APP. |
|---|---|---|---|---|
| C | SEE CHANGE NOTICE 2223 | GRH | 2-15-63 | |
| B1 | change notice 1699 | JJT | 8/3/60 | |
| A | added note 6 | JJT | 7/1/60 | |
| A | changed .016 x 45° to 1/16 R. | JJT | 7/1/60 | |
| A | Added 1/32 x 45° chamfer to boss detail | JJT | 7/1/60 | |
| A | changed .500 ±.010 to .500 ±.015 | JJT | 7/1/60 | |
| A | deleted 63 on one side of spider | JJT | 7/1/60 | |
| A | changed .250 to .250 +.005 -.015 | JJT | 7/1/60 | |

ENGR. SUPT. — PROJECT ENGR. — ENGINEER — DESIGN ENGINEER — DRAWN J.J. Tudor 4/29/60 — CHECKED 5/4/60

BREAK ALL SHARP EDGES UNLESS OTHERWISE SPECIFIED.
TOLERANCE UNLESS OTHERWISE SPECIFIED
FRACTIONS ± 1/64
DECIMALS ± .005
ANGLES ± 0°15'

SCALE 1" = 1"

OAK RIDGE NATIONAL LABORATORY

Lower Spider
TYPE I AND TYPE II

B-2-02-054-9816-C

| PARTS LIST | | |
|---|---|---|
| DWG. NO. | QTY. | NAME |

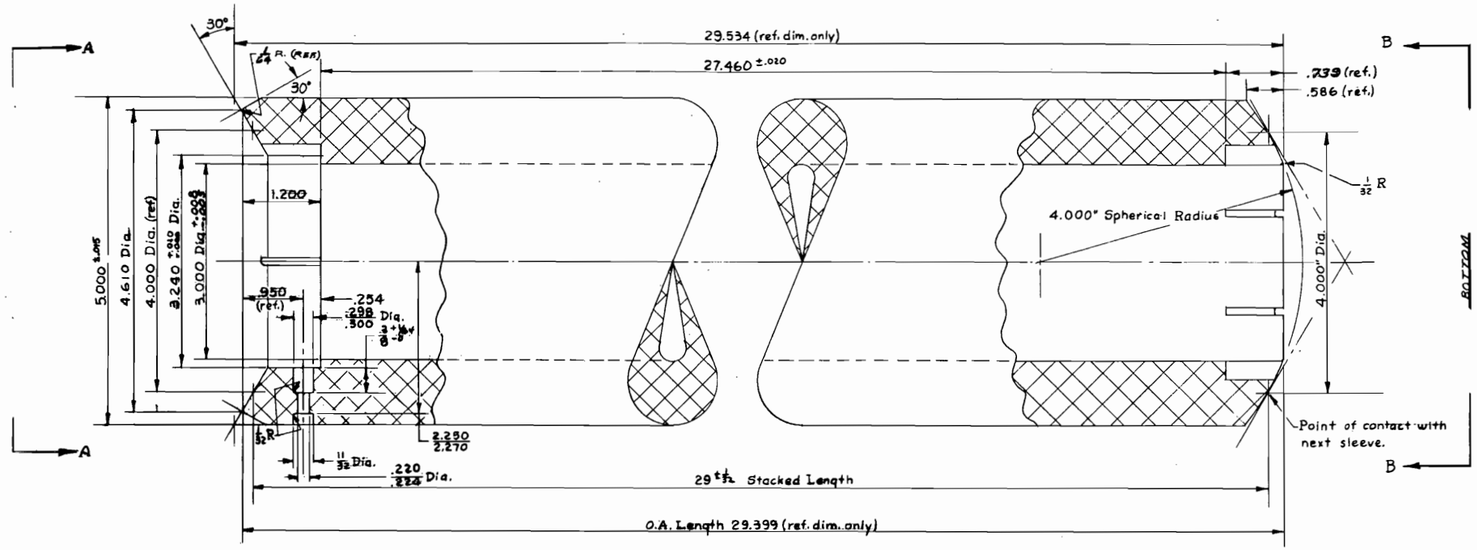


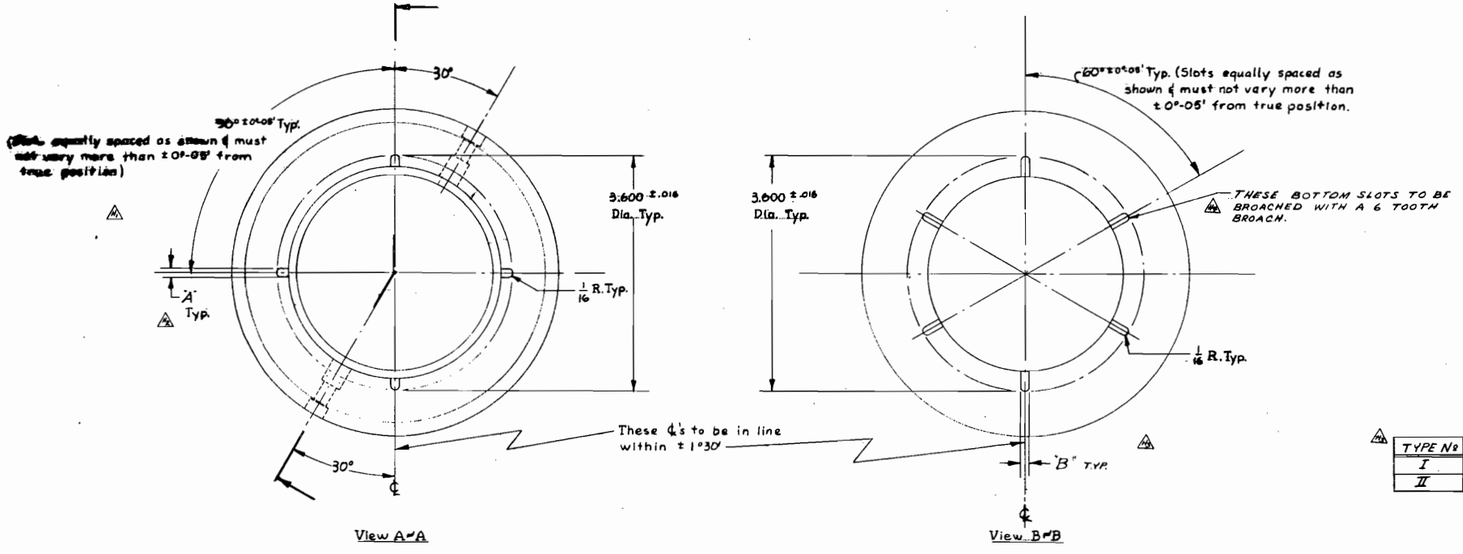


View A-A




View B-B

D-2-02-054-9812

Notes:
1. Surface roughness as per SPECIAL ACCEPTED ROUGHNESS GUAGE.
2. 3.000" I.D. Bore to be straight within .024 TIR.
3. 3.000 Dia. & 3.240 Dia. to be concentric within .010 TIR.
4. 4.000 spherical radius to be concentric with 3.000 I.D. bore within ±1/64 TIR
5. 3.600 Dia to be concentric with 3.000 I.D. bore within ±.016 TIR
6. Material as per EGCR-2-3 -LATEST REVISION
7. Spec. # EGCR-2-3 -LATEST REVISION
8. All dimensions are finished dimensions.

| TYPE No | DIM. "A" | DIM. "B" |
|---|---|---|
| I | 125 +.003 -.000 | .125 +.003 -.002 |
| II | .132 -.125 | .138 -.133 |

| | | | | |
|---|---|---|---|---|
| H | SEE DCN 2223 | GRH | 7/9/63 | [illegible] |
| G | SEE DCN 2046 | FEL | 11/16/62 | [illegible] |
| F | SEE DCN 1949 | GRH | 7/9/62 | [illegible] |
| E | SEE DCR 1932 | F.M. | 4/26/62 | [illegible] |
| D | SEE DCN 1861 D, THRU D6 | [illegible] | 4/6/61 | [illegible] |
| C1 | change notice 1699 | JJT | 8/3/60 | [illegible] |
| B | add 11/32 R. | JJT | 8/3/60 | [illegible] |
| A | interchanged dim. .0625 with .125 | JJT | 7/1/60 | [illegible] |
| A | added note 6 | JJT | 7/1/60 | [illegible] |
| A | added ref. dim. to 4.000 dia. | JJT | 7/1/60 | [illegible] |
| A | changed 3.240 to 3.240 | JJT | 7/1/60 | [illegible] |
| A | changed ±0°30' to ±1°30' | JJT | 7/1/60 | [illegible] |
| | REVISION | BY | DATE | APP. |

| | | | |
|---|---|---|---|
| CHECK DEPT. | | ENGINEER | |
| PROJECT ENGR. | | DESIGN ENGINEER | |
| [illegible] | 11/16/63 | DRAWN J. J. Tudor | 5/11/60 |
| | | [illegible] | 6/1/60 |

SCALE 1"=1"

| | |
|---|---|
| WESTINGHOUSE A.F.D. DWG. | 228-D-239 |
| Ass'y Fuel Element & Support Sleeve | D-9822 |
| REFERENCE DRAWINGS | DWG. NO. |

OAK RIDGE NATIONAL LABORATORY

TYPE I AND TYPE II
Support Sleeve

D-2-02-054-9812-H

B-2-02-054-9818-B

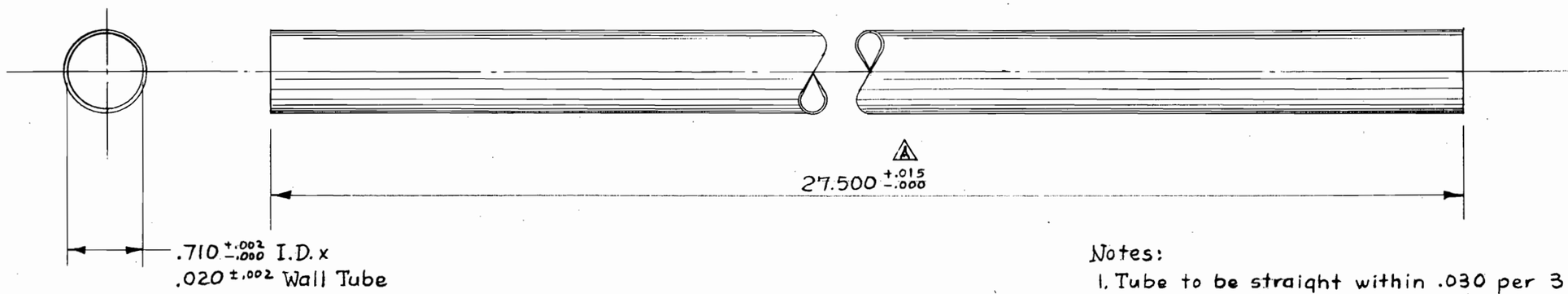


Notes:

1. Tube to be straight within .030 per 3 ft. length as per AISI tubing spec. manual.
2. Tube ends to be square to O.D. within .005 TIR.
3. Material ≈ Type 304 SS. A
4. Spec. ≈ EGCR-2-1-1 B1

| REFERENCE DRAWINGS | DWG. NO. |
|---|---|
| WESTINGHOUSE A.F.D. DWG. | C-116-B-144 |
| Assy Fuel Element & Support Sleeve | D-9822 |
| Fuel Element Assembly | C-9821 |

| REVISION | BY | DATE | APP. |
|---|---|---|---|
| B1 change notice 1699 | JJT | 8/3/60 | |
| A added note 3 | JJT | 7/1/60 | |
| A Changed (straightness tolerance (note 1) from .010 entire length to .030/3 ft. | JJT | 7/1/60 | |
| A Changed .002 TIR to .005 TIR (Note 2) | JJT | 7/1/60 | |
| A Changed 27.500 +.005 -.000 to 27.500 +.015 -.000 | JJT | 7/1/60 | |

ENGR. SUPV. | ENGINEER | PROJECT ENGR. | DESIGN ENGINEER | DRAWN J. J. Tudor 5/16/60 | CHECKED 6/1/60

BREAK ALL SHARP EDGES UNLESS OTHERWISE SPECIFIED.

TOLERANCE UNLESS OTHERWISE SPECIFIED:
FRACTIONS ± 1/64
DECIMALS ± .005
ANGLES ± 0°-15'

SCALE 1" = 1"

OAK RIDGE NATIONAL LABORATORY

Fuel Element Tube

B-2-02-054-9818-B

General Notes:
1. Break all sharp edges.
2. Finish 125 rms or better.

B-2-02-054-9817

NOTES (CONT.)

4- TOLERANCE ON .483 & .583 DIM'S. MAY BE INCREASED TO ± .002 PROVIDED THE BRAZED SPACER MEETS FUNCTIONAL REQUIREMENTS PER DRAWING C-47967

5- LOCAL OVERSIZE OF DIA. "A" BY .004 PERMITTED IF CONFINED TO A 90° SEGMENT

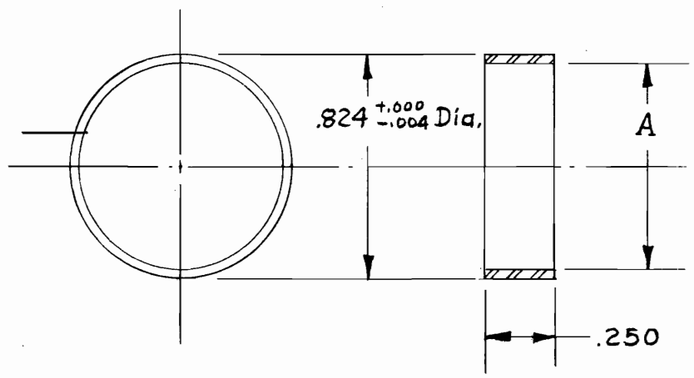


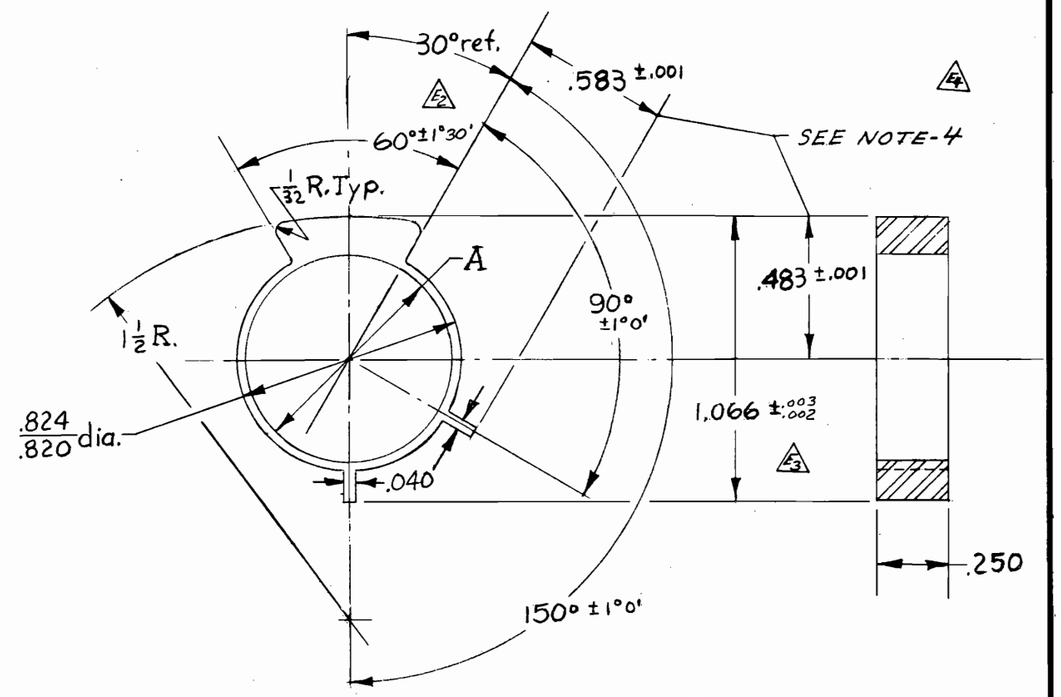


1. Dim. "A" to be O.D. +.000 to .006 of Fuel Element Tube, Drwg. B-2-02-054-9818. (see spec.) AND NOTE 5
2. Material ≈ Type 304 SS.
3. Spec. ≈ EGCR-2-1-5

2 Same note pt. 1.

| REFERENCE DRAWINGS | DWG. NO. |
|---|---|
| WESTINGHOUSE A.F.D. DWG. | C-116-B-146 |
| FUEL ELEMENT TUBE SUB-ASS'Y. | C-47967 |
| Ass'y Fuel Element & Support Sleeve | D-9822 |
| Fuel Element Assembly | C-9821 |

| | REVISION | BY | DATE | APP. |
|---|---|---|---|---|
| E | CHANGE NOTICE 2223 | GRH | 2/19/63 | |
| D | CHANGE NOTICE 1729 | JJT | 9/10/60 | |
| C1 | change notice 1699 | JJT | 8/3/60 | |
| B | changed angular tol. ±0°-15' to ±1°-0" | JJT | 8/3/60 | |
| B | removed 1/64 R. on pt. 2 | JJT | 8/3/60 | |
| A | removed .032 wall thick. added .824/.820 dia. | JJT | 7/1/60 | |
| A | added note 2 | JJT | 7/1/60 | |
| A | Changed I.D. pts. 1 & 2 to dim "A" (see note) | JJT | 7/1/60 | |

| | | | |
|---|---|---|---|
| ENGR. SUPV. | | ENGINEER | |
| PROJECT ENGR. | | DESIGN ENGINEER | |
| | 1/18/63 | DRAWN J. J. Tudor | 5/19/60 |
| | | CHECKED | 6/1/60 |

BREAK ALL SHARP EDGES UNLESS OTHERWISE SPECIFIED.
TOLERANCE UNLESS OTHERWISE SPECIFIED:
FRACTIONS ± 1/64
DECIMALS ± .005
ANGLES ± 0°-15'

SCALE 2" = 1"

OAK RIDGE NATIONAL LABORATORY

Fuel Element Spacers

B-2-02-054-9817-E

B-2-02-054-9815

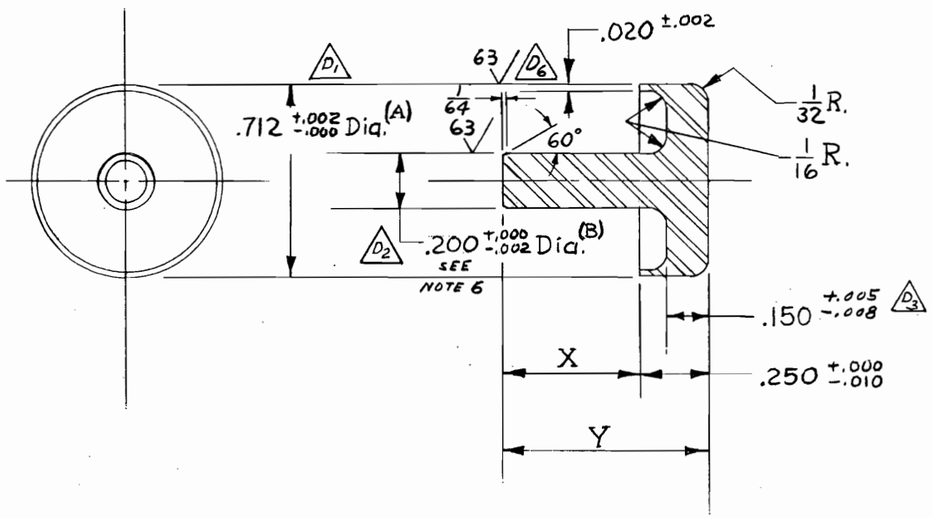


| Pt. No. | Dim. "X" | Dim. "Y" |
|---|---|---|
| 1 | .510 ± .003 | .760 (ref) |
| 2 | .300 ± .003 | .550 (ref) |

Notes.

1. Diameter "A" & diameter "B" to be concentric within .002 TIR. (D4)
2. Max. surface roughness not to exceed 125 rms unless otherwise specified.
3.
4. Material ≈ Type 304 SS.
5. Spec. ≈ EGCR-2-1-2
6. 0.195 MIN.–0.206 MAX. DIA. PERMITTED BELOW THE "X" DIMENSION. (D5)

| | | | | |
|---|---|---|---|---|
| D | SEE CHANGE NOTICE 2223 | GRH | 2-15-63 | |
| C1 | change notice 1699 | JJT | 8/3/60 | |
| B | removed note #3 | JJT | 8/3/60 | |
| A | added note 4 | JJT | 7/1/60 | |
| A | changed .260 to .300 | JJT | 7/1/60 | |
| A | " .510 to .550 | JJT | 7/1/60 | |
| A | Changed 32√ to 63√ (2 places) | JJT | 7/1/60 | |
| A | Removed 30° x .047 Chamfer | JJT | 7/1/60 | |
| A | Changed .063 R to 1/16 R | JJT | 7/1/60 | |
| A | Changed .016 R to 1/32 R | JJT | 7/1/60 | |
| A | Deleted note on perpendicularity | JJT | 7/1/60 | |
| | REVISION | BY | DATE | APP. |

| | |
|---|---|
| WESTINGHOUSE A.F.D. DWG. | C-116-B-116 |
| Fuel Element Assembly | C-9821 |
| Ass'y Fuel Element & Support Sleeve | D-9822 |
| REFERENCE DRAWINGS | DWG. NO. |

| | | | | | |
|---|---|---|---|---|---|
| ENGR. SUPT. | | ENGINEER | | BREAK ALL SHARP EDGES UNLESS OTHERWISE SPECIFIED. | OAK RIDGE NATIONAL LABORATORY |
| PROJECT ENGR. | | DESIGN ENGINEER | | TOLERANCE UNLESS OTHERWISE SPECIFIED: FRACTIONS ± 1/64 DECIMALS ± .005 ANGLES ± 0°-15' | Top & Bottom End Caps |
| | 1/18/63 | DRAWN J.J. Tudor | 5/16/60 | | |
| | | CHECKED | 6/1/60 | SCALE 2" = 1" | B-2-02-054-9815-D |

B-2-02-054-9819-B

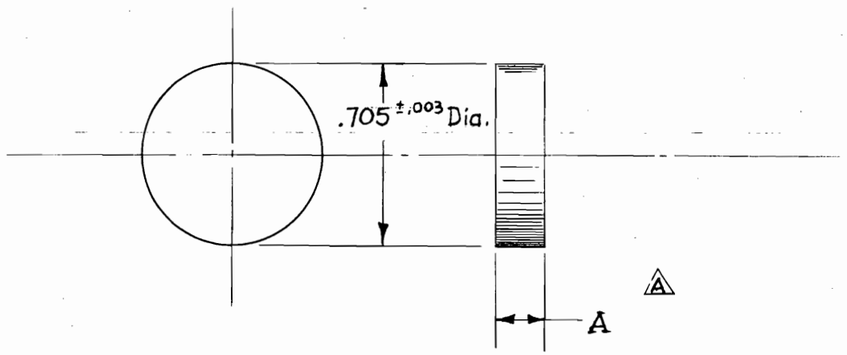


Note

1. Ends of pellet to be square with O.D. within .005 TIR
2. Make pellets in four sizes.
   Dim. "A" ~ #1 = .188 $^{+.000}_{-.005}$ #3 = .208 $^{+.000}_{-.005}$
   #2 = .198 $^{+.000}_{-.005}$ #4 = .218 $^{+.000}_{-.005}$
3. Material ~ MgO (Sintered) A
4. Spec. ~ EGCR-2-1-4 B1

| REFERENCE DRAWINGS | DWG. NO. |
|---|---|
| Ass'y Fuel Element & Support Sleeve | D-9822 |
| Fuel Element Assembly | C-9821 |

| REVISION | | BY | DATE | APP. |
|---|---|---|---|---|
| B1 | change notice 1699 | JJT | 8/3/60 | |
| A | added note 3 | JJT | 7/1/60 | |
| A | Changed .188 $^{+.000}_{-.020}$ to note 2. | JJT | 7/1/60 | |

ENGR. SUPT. | ENGINEER | PROJECT ENGR. | DESIGN ENGINEER | DRAWN J. J. Tudor 5/28/60 | CHECKED 6/1/60

BREAK ALL SHARP EDGES UNLESS OTHERWISE SPECIFIED.
TOLERANCE UNLESS OTHERWISE SPECIFIED:
FRACTIONS ± 1/64
DECIMALS ± .005
ANGLES ± 0°-15'
SCALE 2" = 1"

OAK RIDGE NATIONAL LABORATORY

Magnesium Oxide Pellet

B-2-02-054-9819-B

B-2-02-054-9820

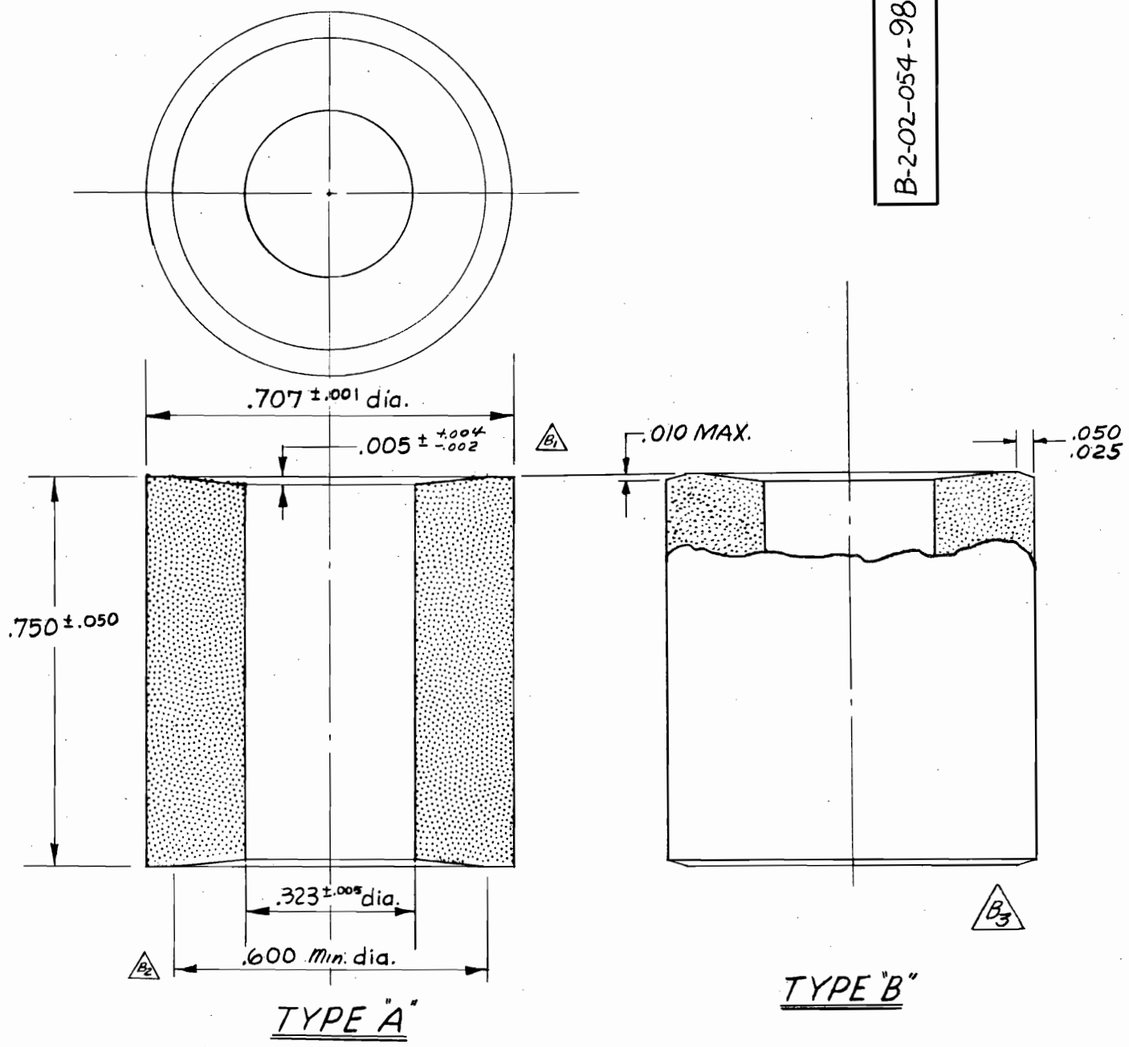


Note:
1. Both ends alike.
2. Material ≈ $UO_2$ (Sintered)
3. Ends of pellet to be square with O.D within .005 TIR.
4. Spec. ≈ EGCR-2-1-3

| REFERENCE DRAWINGS | DWG. NO. |
|---|---|
| WESTINGHOUSE A.F.D. DWG. | C-116-B-145 |
| Assy Fuel Element & Support Sleeve | D-9822 |
| Fuel Element Assembly | C-9821 |

| REVISION | | BY | DATE | APP. |
|---|---|---|---|---|
| B | CHANGE NOTICE 2223 | GRH | 2-15-63 | |
| A | change notice 1699 | JJT | 8/3/60 | |

| | | | |
|---|---|---|---|
| ENGR. SUPT. | | ENGINEER | |
| PROJECT ENGR. | | DESIGN ENGINEER | |
| | 1/18/63 | DRAWN JJ Tudor | 7/5/60 |
| | | CHECKED | 7/11/60 |

BREAK ALL SHARP EDGES UNLESS OTHERWISE SPECIFIED.
TOLERANCE UNLESS OTHERWISE SPECIFIED
FRACTIONS ± 1/64
DECIMALS ± .005
ANGLES ± 0°-30'

SCALE 4" = 1"

OAK RIDGE NATIONAL LABORATORY

$UO_2$ Pellet

B-2-02-054-9820-B

## PARTS LIST

| PART NO. | DWG. NO. | NO. REQD | DESCRIPTION (NAME, SIZE, ETC.) | MATERIAL |
|---|---|---|---|---|
| 1 | B-9818 | 1 | TUBE | |
| 2 | B-9817 | 1 | SPACER (PART #1) | |
| 3 | B-9817 | 1 | SPACER (PART #2) | |

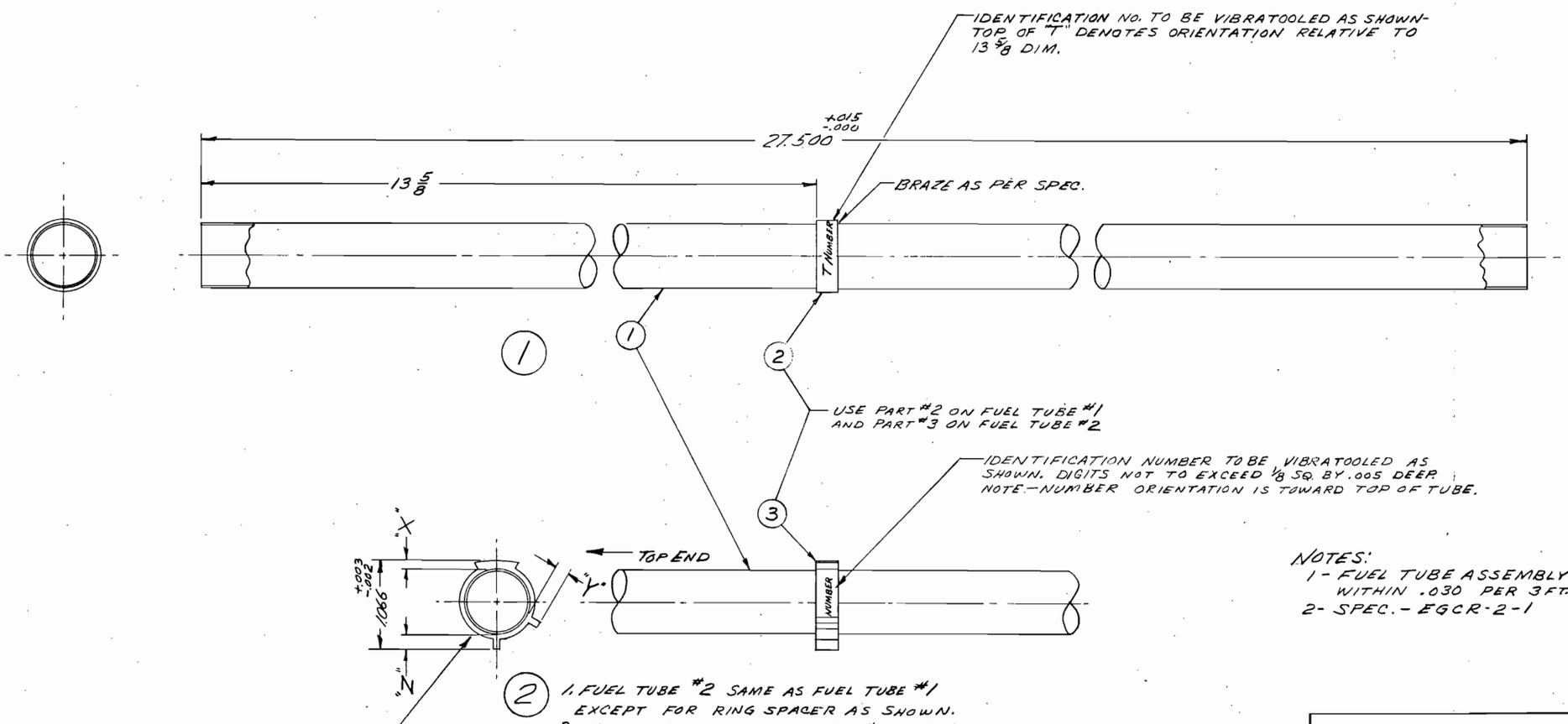


NOTES:
1 - FUEL TUBE ASSEMBLY TO BE STRAIGHT WITHIN .030 PER 3 FT. LENGTH.
2 - SPEC. - EGCR-2-1

(2) 1. FUEL TUBE #2 SAME AS FUEL TUBE #1 EXCEPT FOR RING SPACER AS SHOWN.
2. NOTE - ORIENTATION OF PART #3 TO TOP END OF TUBE.

FUNCTIONAL CHECK FOR BRAZED SPACER. DIMENSION ("X" +.100), "Y" & "Z" MUST BE WITHIN ±.004 OF ONE ANOTHER. THE 1.066 +.003 -.002 DIM. MUST BE HELD IN THE BRAZED ELEMENT.

**GENERAL SPECIFICATIONS:**

1. Break all sharp edges 1/64 max., unless otherwise specified.
2. The fabricator may choose the type, grade or finish of material unless otherwise specified.

**MACHINE FINISH SPECIFICATIONS:**

1. Finish symbols are in accordance with ASA Standard B46.1 - 1947.
2. Roughness height values are the maximum arithmetical average deviation from the mean surface, expressed in microinches.
3. For surfaces not otherwise indicated, roughness height shall not exceed √.

| LTR | REVISIONS | DATE | APPD | APPD |
|---|---|---|---|---|

DRAWING NO. C-47967

| DRAWN | DATE | CHECKED | DATE | APPROVED | DATE |
|---|---|---|---|---|---|
| G.R. Hicks | 11/9/62 | [signature] | 11/16/63 | | |
| DESIGNED | DATE | SUBMITTED | DATE | APPROVED | DATE |

THIS DRAWING CLASSIFIED
AS
PER

LIMITS ON DIMENSIONS UNLESS OTHERWISE SPECIFIED
FRACTIONS: ± .005
DECIMALS: ± 1/64
ANGLES: ± 0°-15'
SCALE: FULL

| | |
|---|---|
| WESTINGHOUSE A.F.D. DWG. | C-116-C-423 |
| FUEL ELEMENT | C-9821 |
| REFERENCE DRAWINGS | DWG. NO. |

BLDG. NO.

FUEL ELEMENT TUBE SUB-ASSEMBLY
REACTOR DIVISION

OAK RIDGE NATIONAL LABORATORY
OPERATED BY
UNION CARBIDE NUCLEAR COMPANY
A DIVISION OF UNION CARBIDE AND CARBON CORPORATION
OAK RIDGE, TENNESSEE

| SUBMITTED | ACCEPTED | APPROVED |
|---|---|---|
| [signature] | 2/19/63 [signature] | |

JOB #518 C-47967 REV

## BIBLIOGRAPHY


Coobs, J. H., "Materials Development for Core I Fuel Assemblies for the Experimental Gas-Cooled Reactor," Nuclear Sci. Eng., 14(1): 53–68 (Sept. 1962).

Cottrell, W. B., H. N. Culver, J. L. Scott, and M. M. Yarosh, Fission-Product Release from $UO_2$, ORNL-2935 (Sept. 13, 1960).

DeVan, J. H., "Reactions of Reactor Materials with Contaminants Outgassed from Graphite," pp 698–732 in Proceedings of the US/UK Meeting on Compatibility Problems of Gas-Cooled Reactors held at Oak Ridge National Laboratory, February 24–26, 1960, TID-7597, Book 2 (March 3, 1961).

Dodd, C. V., and R. W. McClung, Fuel Element Coolant Channel and Other Spacing Measurements by Eddy-Current Techniques, ORNL-TM-129 (March 20, 1962).

Kaiser Engineers and Allis-Chalmers Manufacturing Company, Experimental Gas-Cooled Reactor Preliminary Hazards Summary Report, ORO-196 (May 1959).

Lain, Philip J., and P. V. Goulden, Fuel Assembly Handling Experiment, Allis-Chalmers Manufacturing Company, Atomic Energy Division, Nuclear Power Department, RD-0100 (1959).

Manly, W. D., and J. H. Coobs, "The Experimental Gas-Cooled Reactor," pp 49–82 in Nuclear Metallurgy, Vol. 8, IMD Spec. Rep. Ser. No. 11, The Metallurgy Society of AIME, 1962.

Manly, W. D., and J. H. Coobs, "Materials Development Program for the Gas-Cooled Reactor Project at the Oak Ridge National Laboratory," J. Franklin Inst., pp 150–167 Monograph No. 7, GCR Symposium and ANS Jointly, (1960).

Manly, W. D., and J. H. Coobs, "Materials Selections and Development Work," p 138 in Information Meeting on Gas-Cooled Power Reactors, Oak Ridge National Laboratory, October 21–22, 1958, TID-7564 (Dec. 1958).

Martin, W. R., and J. R. Weir, A Device to Simulate the Service Thermal Conditions in EGCR-Type Fuel Elements, ORNL-3032 (Dec. 28, 1960).

Martin, W. R., and J. R. Weir, Dimensional Behavior of the Experimental Gas-Cooled Reactor Fuel Element at Elevated Temperatures, ORNL-3103 (July 19, 1961).

McClung, R. W., "Development of Nondestructive Tests for the EGCR Fuel Assembly," Nondestructive Testing, 19(5): 352–358 (Sept.–Oct. 1961).

McClung, R. W., and R. A. Nance, Development of Nondestructive Tests for the EGCR Fuel Element, ORNL-3059 (Feb. 16, 1961).

McCoy, H. E., "The Influence of Various Gaseous Environments on the Creep-Rupture Properties of Nuclear Materials Selected for High-Temperature Service," pp 263–296 in Conference on Corrosion of Reactor Materials, June 4–8, 1962, Proceedings, Vol. I., International Atomic Energy Agency, Vienna (1962).

McCoy, H. E., The Influence of Various Gaseous Environments on the Creep-Rupture Properties of Nuclear Materials Selected for High-Temperature Service, ORNL-TM-326 (Sept. 19, 1962).

McCoy, H. E., and D. A. Douglas, "Effect of Environment on the Creep Properties of Type 304 Stainless Steel at Elevated Temperatures," p 748 in Proceedings of the US/UK Meeting on Compatibility Problems of Gas-Cooled Reactors held at Oak Ridge National Laboratory, February 24–26, 1960, TID-7597, Book 2 (March 3, 1961).

McCoy, H. E., W. R. Martin, and J. R. Weir, "Effect of Environment on the Mechanical Properties of Metals," pp 163–176 in Procedures of the Institute of Environmental Sciences National Meeting, April 5, 6, 7, 1961, Washington, D. C., Institute of Environmental Sciences, Mt. Prospect, Illinois (1961).

Preskitt, C. A., et al., "Physics Analysis for the EGCR" (unpublished data).

Samuels, G., Design and Analysis of the Experimental Gas-Cooled Reactor Fuel Assemblies, ORNL-3454 (to be published).

Samuels, G., "Fuel Elements for Gas-Cooled Reactors," J. Franklin Inst., Monograph No. 7, GCR Symposium and ANS Jointly (1960).

Staff of the Oak Ridge National Laboratory, The ORNL Gas-Cooled Reactor, ORNL-2500, Parts 1–4 (April 1, 1958).

Staff of the Oak Ridge National Laboratory, The ORNL Gas-Cooled Reactor Materials and Hazards, ORNL-2505 (June 9, 1958).

Staff of the Oak Ridge National Laboratory, The ORNL Gas-Cooled Reactor Advanced Concepts, ORNL-2510 (Sept. 18, 1958).

Swindeman, R. W., and D. A. Douglas, "The Failure of Structural Metals Subjected to Strain-Cycling Conditions," Trans. ASME, 81(2): 203 (1959).

Taylor, A. J., "Characterization of Uranium Dioxide Powders for Sintering," pp 31–42 in Meeting on Characterization of Uranium Dioxide held at Oak Ridge National Laboratory, Oak Ridge, Tennessee, December 12–13, 1961, TID-7637 (Oct. 1, 1962).

Trauger, D. B., "Irradiation Testing of Fuel Materials for EGCR," Nuclear Sci. Eng., 14: 69–82 (Sept. 1962).

Venard, J. T., and C. R. Kennedy, Collapse of Tubes by External Pressure, ORNL-TM-166 (April 17, 1962).

Venard, J. T., Stress-Rupture Properties of Type 304 Stainless Steel Tubing, ORNL-TM-535 (in press).

Wick, E. A., and R. L. Heestand, Assembly of Fifty Prototype Fuel Elements for the Experimental Gas-Cooled Reactor, ORNL-2936 (Dec. 12, 1960).

DISTRIBUTION

1–2. Central Research Library
3–27. Laboratory Records
28. Laboratory Records, ORNL, RC
29. ORNL – Y-12 Technical Library Document Reference Section
30. ORNL Patent Office
31. G. M. Adamson
32. R. J. Beaver
33. M. Bender
34. A. L. Boch
35. W. F. Boudreau
36. E. J. Breeding
37. R. B. Briggs
38. N. A. Brown
39. T. E. Cole
40. J. H. Coobs
41. J. A. Conlin
42. W. B. Cottrell
43. F. L. Culler
44. H. N. Culver
45. J. E. Cunningham
46. J. H. DeVan
47. D. A. Douglas, Jr.
48. R. B. Evans
49. R. M. Evans
50. J. Foster
51. A. P. Fraas
52. J. H Frye, Jr.
53–54. A. Goldman
55. J. M. Googin
56. B. L. Greenstreet
57. W. R. Grimes
58. J. P. Hammond
59. W. O. Harms
60. R. F. Hibbs
61–65. M. R. Hill
66. H. Inouye
67. G. W. Keilholtz
68. K. K. Klindt
69. R. B. Korsmeyer
70. J. A. Lane
71. H. G. MacPherson
72–111. W. D. Manly
112. R. W. McClung
113. H. C. McCurdy
114. H. F. McDuffie
115. C. J. McHargue
116. F. R. McQuilkin
117. H. J. Metz
118. E. C. Miller
119. J. G. Morgan
120. F. H. Neill
121. P. Patriarca
122. A. M. Perry
123. M. W. Rosenthal
124. G. Samuels
125. H. W. Savage
126. A. W. Savolainen
127. J. L. Scott
128. R. L. Senn
129. O. Sisman
130. G. M. Slaughter
131. E. Storto
132. J. A. Swartout
133. A. Taboada
134. W. C. Thurber
135–144. G. M. Tolson
145. D. B. Trauger
146. J. R. Weir
147. E. A. Wick, Allis-Chalmers, Greendale, Wisconsin
148–162. Division of Technical Information Extension (DTIE)
163–165. W. F. Banks, Allis-Chalmers
166–168. P. D. Bush, Kaiser Engineers
169–170. D. F. Cope (ORO)
171. W. R. Cooper, TVA
172. H. L. Falkenberry, TVA
173. R. A. Charpie, UCC Res. Adm., New York
174–179. L. H. Jackson, ORO