ORNL
MASTER COPY

OAK RIDGE NATIONAL LABORATORY
operated by
UNION CARBIDE CORPORATION
for the
U. S. ATOMIC ENERGY COMMISSION

ORNL-TM-598

A STUDY OF THE ELECTRODELESS ELECTROLYTIC DISSOLUTION OF STAINLESS STEEL IN NITRIC ACID USING A MAGNETICALLY INDUCED POTENTIAL

C. A. Erdman
C. V. Chester

NOTICE

This document contains information of a preliminary nature and was prepared primarily for internal use at the Oak Ridge National Laboratory. It is subject to revision or correction and therefore does not represent a final report. The information is not to be abstracted, reprinted or otherwise given public dissemination without the approval of the ORNL patent branch, Legal and Information Control Department.

LEGAL NOTICE

This report was prepared as an account of Government sponsored work. Neither the United States, nor the Commission, nor any person acting on behalf of the Commission:

A. Makes any warranty or representation, expressed or implied, with respect to the accuracy, completeness, or usefulness of the information contained in this report, or that the use of any information, apparatus, method, or process disclosed in this report may not infringe privately owned rights; or

B. Assumes any liabilities with respect to the use of, or for damages resulting from the use of any information, apparatus, method, or process disclosed in this report.

As used in the above, "person acting on behalf of the Commission" includes any employee or contractor of the Commission, or employee of such contractor, to the extent that such employee or contractor of the Commission, or employee of such contractor prepares, disseminates, or provides access to, any information pursuant to his employment or contract with the Commission, or his employment with such contractor.

ORNL-TM-598

CHEMICAL TECHNOLOGY DIVISION

A STUDY OF THE ELECTRODELESS ELECTROLYTIC DISSOLUTION OF STAINLESS STEEL IN NITRIC ACID USING A MAGNETICALLY INDUCED POTENTIAL

C. A. Erdman
C. V. Chester

Contract No. W-7405-eng-26

Date Issued

SEP 3 - 1963

OAK RIDGE NATIONAL LABORATORY
Oak Ridge, Tennessee
operated by
UNION CARBIDE CORPORATION
for the
U. S. Atomic Energy Commission

CONTENTS

Page

Abstract 1

Introduction 1

Dissolution of Stainless Steel by Direct Current 2
  Required Voltage 2
  Pulse Length 2

Production of Induced EMF. 5
  Mechanical Movement of Field and/or Stainless Steel. . . . 5
  Changing Magnetic Field. 7
  Methods of Energizing Primary. 8

Experimental 12
  Analog Solution and Scaling. 12

Design Considerations. 18
  Costs. 18
  Cooling Requirements 18
  Mechanical Strength. 19

Conclusions and Recommendations. 19

Appendix 20
  Determination of Inductance. 20
  Sample Calculation of Velocity Needed to Induce 1 Volt/cm
    Potential Gradient in Piece of Stainless 20

A STUDY OF THE ELECTRODELESS ELECTROLYTIC DISSOLUTION OF STAINLESS STEEL IN NITRIC ACID USING A MAGNETICALLY INDUCED POTENTIAL

C. A. Erdman
C. V. Chester

ABSTRACT

A feasibility study of an electrolytic dissolver for stainless steel using an electromagnetically induced emf was made. The dissolver and process are very uneconomical due to inherent inefficiencies in electromagnetic coupling between the primary coil and the dissolving stainless steel pieces constituting the secondary. The required circuit parameters and performance of a feasible design were evaluated by experiments with a scaled analog of the device. The full size dissolver would consist of a 0.1 farad capacitor discharging at 675 volts once per second into 150 turns of water cooled copper tubing wrapped around a 2-in. pyrex pipe containing the stainless steel. Power input to the primary would be 22.8 kw, efficiency 0.01%, and dissolution rate about 5 mg/hr. Cost of the capacitor bank and silicon control rectifier bank would total about $5000.

INTRODUCTION

Present methods for dissolution of stainless steel-clad reactor fuel elements require very corrosive dissolver solutions. The Darex process, which uses dilute aqua regia, and the Sulfex process, which uses sulfuric acid, work but present severe materials of construction problems for the dissolver, solvent extraction plant, and waste tanks. The use of pure nitric acid is prohibited by the passivating film that forms on the stainless steel surfaces.

For some time electrolytic techniques have been known which can successfully destroy this film. However, except for recent series dissolution work at the Idaho Chemical Processing Plant,[1] all such techniques employ an inert anodic basket. Adequate electrical contact of this anode with the pieces of stainless is a problem.

[1] M. R. Bomar, Series Electrolytic Dissolver for Nuclear Fuels, IDO-14563 (Nov. 15, 1961).

The purpose of the present study was to see whether or not it would be possible to eliminate the electrodes in existing apparatus by replacing the direct impressed voltage with an induced electromotive force.

DISSOLUTION OF STAINLESS STEEL BY DIRECT CURRENT

The requirements for dissolution with an induced emf are the same as with direct impressed voltages: (1) a certain minimum voltage must be attained, (2) this voltage must be impressed for a long enough time to destroy the passivating film.

Required Voltage

A minimum potential for dissolution of 3 volts was indicated by previous work in the literature[2] and confirmed by laboratory experiments. These experiments were run using stainless steel electrodes and a variable voltage D.C. source. The results are shown on Figs. 1 and 2. There seems to be a "knee" in the current-voltage curve just below 3 volts, so lower voltages were not considered. Higher voltages give larger currents and more weight loss but are also harder to produce, therefore 3 volts was chosen as a compromise voltage high enough to give results and low enough to be produced easily.

Pulse Length

The other requirement concerns the duration of the 3-volt pulse. Originally the idea of employing an induced emf was identified with an apparatus that would produce regularly spaced pulses. It was hoped that these short pulses would destroy the film and allow the nitric acid-

[2] "Reprocessing of Power Reactor Fuels," 8th Quarterly Report, July 1 to Oct. 1, 1959, compiled by E. S. Occhipinti, DP-439 (November 1959).

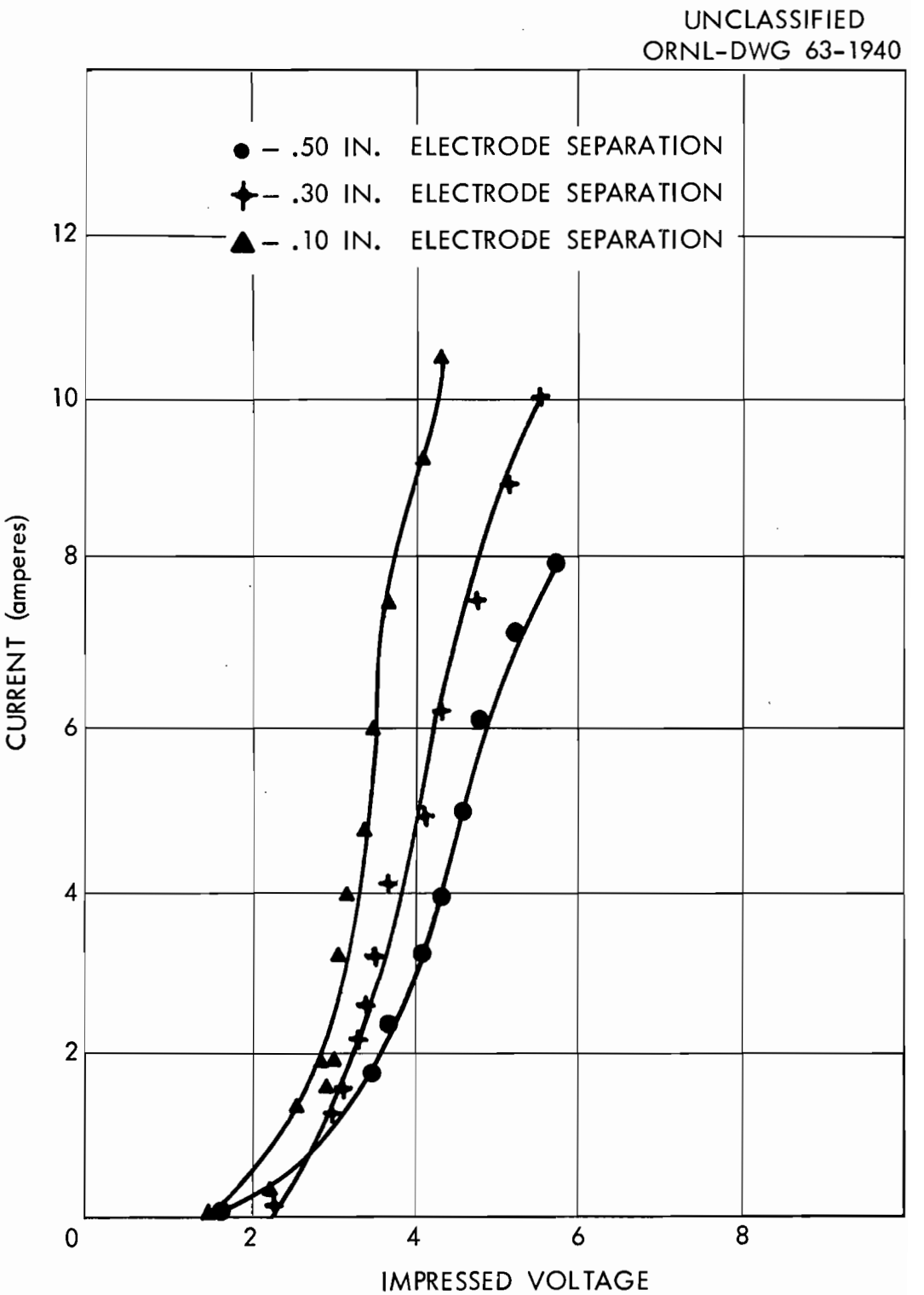

Fig. 1. Dissolution Cell.

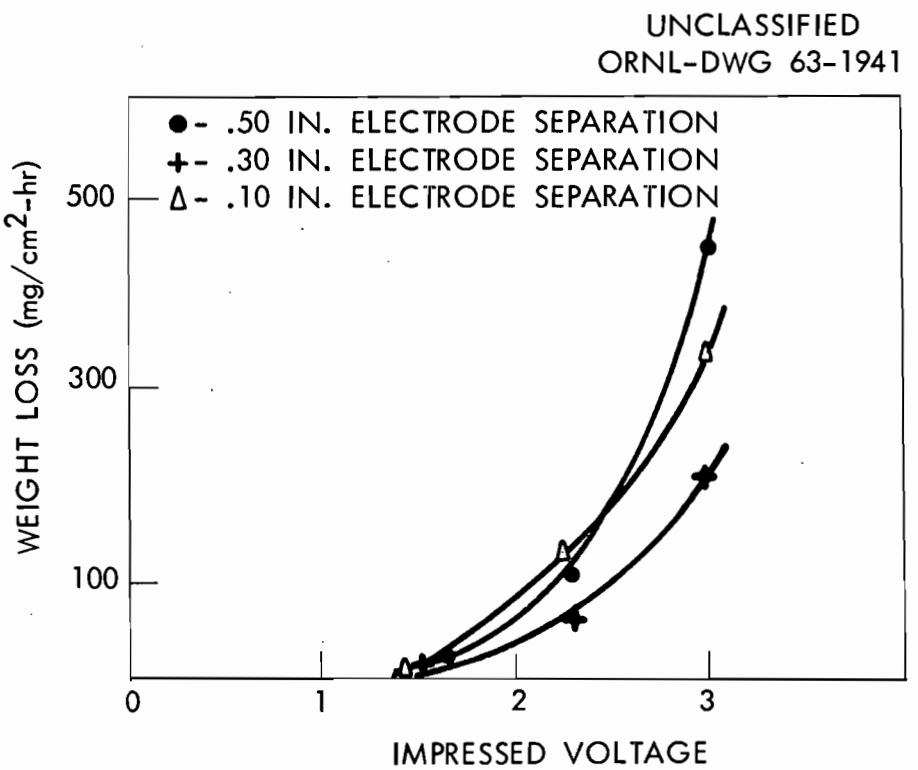

Fig. 2. Dissolution Cell.

stainless reaction to "coast" between pulses. Estimates of the times needed for ions to diffuse through the 250 Å film called for a projected pulse life of 1 to 10 milliseconds.

Experiments were run using a pulse of 3 volts initial magnitude which died out in about 10 ms. This pulse was placed across a U-tube containing 8 M HNO_3 and pieces of 3/8-in.-OD, 1/4-in.-ID stainless steel tubing. The pieces were in direct contact with the platinum anode but were separated from the cathode by 1/8-in. Dissolution rates of 0.5 mg/hr were obtained. The production of this 3 volt, 10 ms pulse in the dissolver was taken as a minimum goal.

PRODUCTION OF INDUCED EMF

Mechanical Movement of Field and/or Stainless Steel

A changing magnetic flux is required to produce an induced emf. Results were available from a previous experiment which used mechanical motion of the stainless pieces to obtain the flux change. Pieces of stainless approximately 4 cm long had been mounted as the parallel elements on a right cylinder about 3 cm in diameter. The cylinder had then been rotated inside a container of HNO_3 which was in turn in a strong magnetic field (Fig. 3a). The direction of the induced emf was in this case reversed each half-cycle, so little could be expected from this method. To avoid reversal of the induced emf, a setup such as the one illustrated in Fig. 3b could have been used. One pole of the magnet is inside the path of the pieces of stainless. Therefore a rotating piece cuts each flux line once per cycle but always in the same direction. However, a brief calculation would have made it clear that useful results could never

UNCLASSIFIED
ORNL-DWG 63-1942

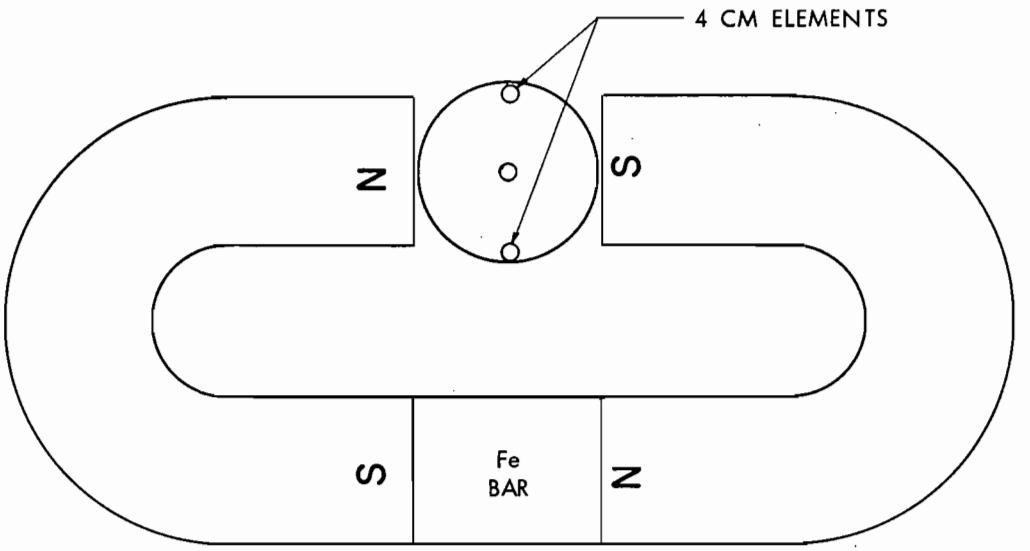

Fig. 3A. Moving Conductor Geometry Producing an Alternating Potential.

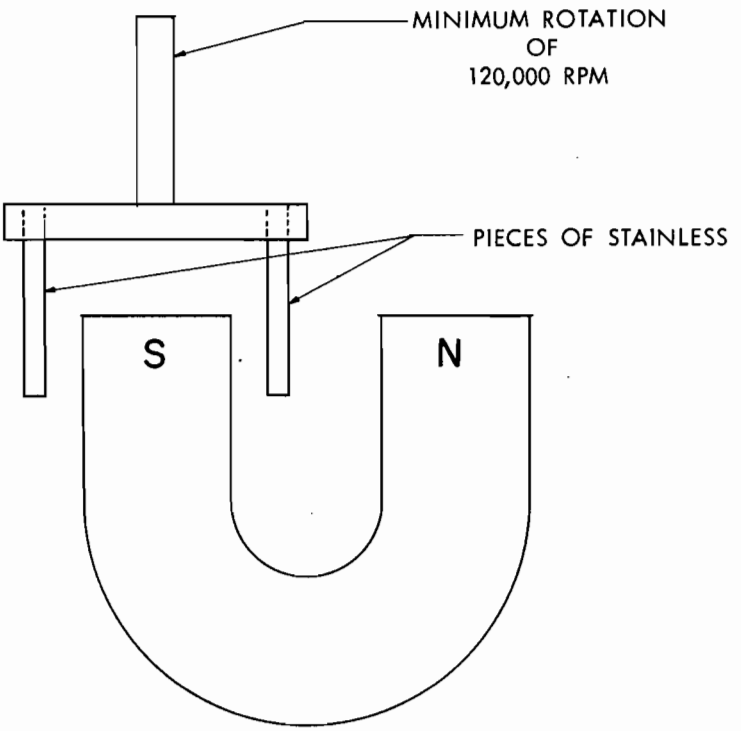

Fig. 3B. Moving Conductor Geometry Producing Potential of One Sign.

be obtained. Assuming a 3-volt gradient is desired and a 1000 gauss magnetic field is used, the speed of a 1 cm piece must be 3000 m/sec (see Appendix). The cylindrical mount would have to rotate at 2,508,000 rpm. Even with 4 cm pieces and a 4000 gauss field, 120,000 rpm would still be needed. Such speeds made further consideration of this method ridiculous.

Changing Magnetic Field

The other method of producing flux change is the use of a growing magnetic field. Such a technique necessitates a transformer-type arrangement. The "single turn" secondary consists of the container of stainless steel pieces in HNO_3. A primary is needed with an inductance high enough for the current to take 10 ms to peak. This is necessary in order to give a 10 ms life to the pulse in the secondary. An iron core running through both primary and secondary was considered as a way to increase inductance. However, the maximum field in the final design is much greater than the saturation point of available magnetic materials. Therefore one would be better off with no core.

With no iron core, superpositioning of the primary and secondary was desired. This resulted in a primary consisting of many turns of conductor wrapped around the secondary, a 2-in.-ID pyrex tube containing the stainless steel and HNO_3.

The voltage gradients induced in the secondary are in circular paths perpendicular to the axis of the pyrex tube and are proportional to the magnetic flux enclosed by the path. For a piece of stainless measuring length d in the direction along the circular path of radius r within the "secondary" container, the maximum induced emf E_2 along its length is as follows:

$$E_2 = \frac{E_1}{N_1} \cdot \left(\frac{r}{R}\right)^2 \cdot \frac{d}{2\pi r} \qquad (1)$$

where E_1 = inductive back-voltage across primary

N_1 = number of turns in primary

R = inside radius of primary.

Considering this relationship, two conditions are needed for the apparatus to work assuming $E_1/N_1 \approx 3$: (1) all pieces must eventually migrate to the walls of the tube, and (2) there must be electrical contact almost all the way around a given circular path or "ring" of stainless steel pieces so that $d/2\pi r \simeq 1$.

The first condition is achieved by inserting a "settler cone" vertically upward into the secondary (Fig. 4). Thus as the pieces dissolve and fall farther down into the container, they are forced toward the walls of the tube. This insures dissolution of even the smallest pieces in time.

The second condition of having just one small gap in the stainless "ring" is harder to achieve. The gap is built into the secondary in the form of two perforated sheets of Teflon separated by about 1/8 in. It is adjacent to one wall of this 1/8-in. spacer that the dissolution will in theory take place. The pieces of stainless must be in good contact all around the "ring" except at this spacer so that there will be a full 3-volt potential difference across the gap. One can readily see that this dissolver could not really eliminate contact problems.

Methods of Energizing Primary

Energizing the primary with sinusoidal alternating current at any reasonable frequency would not give the HNO_3 and stainless in the secondary time to react before the potential was reversed.

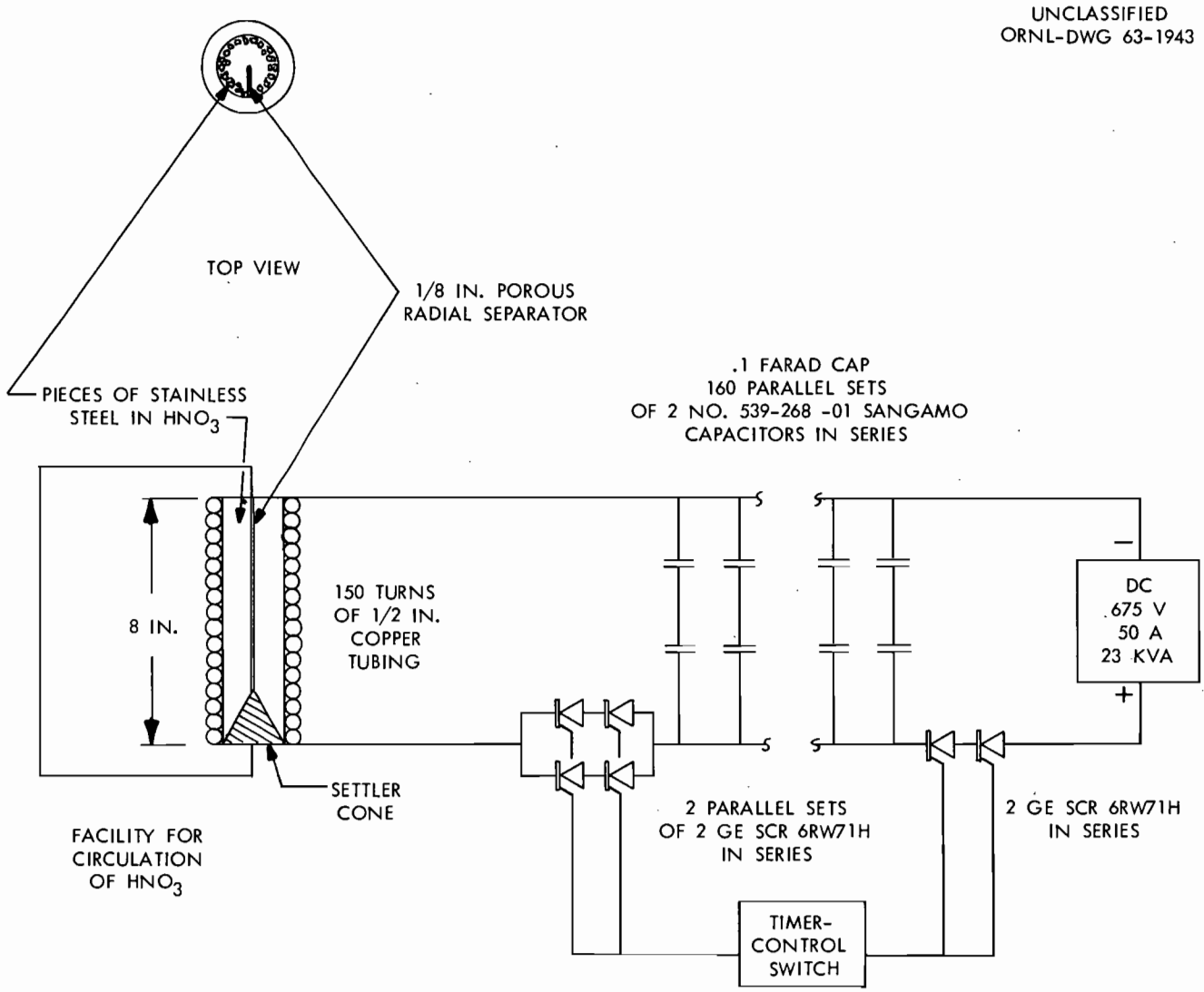

Fig. 4. Proposed Dissolver.

A D.C. source inducing emf during current buildup was next considered. The desired relationship between primary current and secondary voltage for such a source is shown in Fig. 5a. A buildup time to maximum current of 10 ms and a slow decay on breaking of the primary current was desired. For the primary, $I = I_{max} (1 - e^{-Rt/L})$. Thus a large inductance (L) and small resistance (R) were desired. Here the basic problems became evident.

To get the necessary inductance, a large number of turns were needed in the primary. Yet to keep a 3 volt pulse in the secondary, 3 volts had to be added for each turn. Moreover a low resistance in the primary was desired to increase buildup time and to avoid loss of energy as heat.

These same problems also arose when one considered producing the emf by breaking the primary circuit. The idea here had been that the energy in the primary coil would have no place to go but into the secondary.

Calculations showed that a switch was needed that could operate at hundreds of volts and thousands of amps. It is impossible with present switchgear to switch such a load without severe arcing. If an arc forms, it will dissipate most of the energy stored in the magnetic field, with very little going into the secondary. Such switchgear as is available is enormously expensive, and has a life limited to perhaps a hundred cycles.

As the design now stands, a bank of capacitors is discharged through a bank of silicon control rectifiers (Fig. 4). In this way the switching is done at little or no current. Another advantage is that the capacitors have a much lower impedance than a straight D.C. source. The desired relationship between primary current and secondary emf is shown in Fig. 5b.

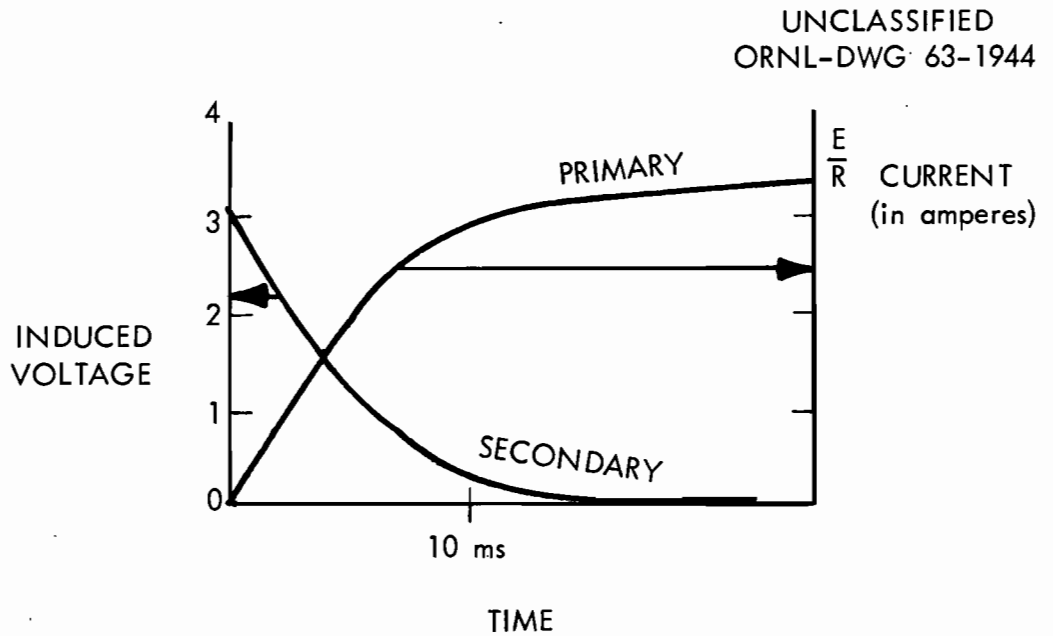

Fig. 5A. Desired Effect of Primary Current on Secondary Voltage Using D.C. Source.

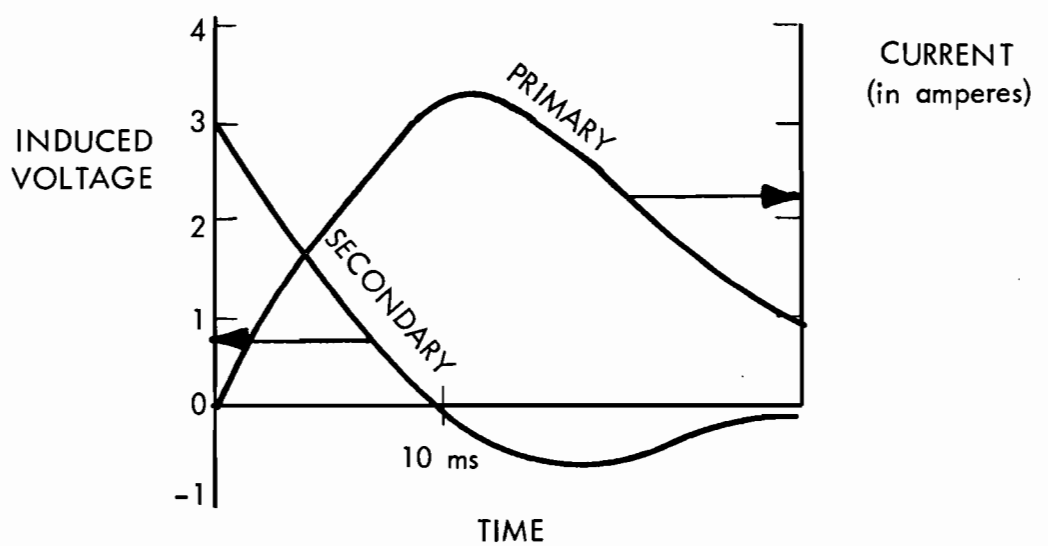

Fig. 5B. Desired Effect of Primary Current on Secondary Voltage Using Capacitor Source.

EXPERIMENTAL

Analog Solution and Scaling

The equation describing the primary circuit is shown below with its solution.

$$-\frac{i}{C} - R\frac{di}{dt} - L\frac{d^2i}{dt^2} = 0 \qquad (2)$$

$$i = K(\text{constant})\left[e^{\left(\frac{-R+\sqrt{R^2-\frac{4L}{C}}}{2L}\right)t} - e^{\left(\frac{-R-\sqrt{R^2-\frac{4L}{C}}}{2L}\right)t}\right] \qquad (3)$$

Because this equation is inexplicit in L and C, solution by direct methods appeared too laborious. However, since this is a linear, ordinary, homogeneous, second-order differential equation, it was possible to set up an analog computer to find the necessary L, C, and R.

The most economical computer that could do the job was a simple LCR circuit. The analog circuit used (Fig. 6) was a scale model of the real circuit. In scaling each term of the differential equation which describes the circuit, unity was found to be a convenient scale factor.

In the first term (i/C), the capacitance C was scaled down by a factor of 100 in order to make it possible to use available small-size capacitors. The current i was also scaled down by 100.

It was desired to scale the inductance to unity so that the analog coil could be mechanically identical to the real coil. Hence from the third term of the equation ($L\frac{d^2i}{dt^2}$), time was scaled down by a factor of 10.

From the second term ($R\frac{di}{dt}$), R was scaled up 10, and from $E = \int_0^t \frac{i}{C}\,dt$, voltage E was scaled down 10. The scaling is summarized in Table 1.

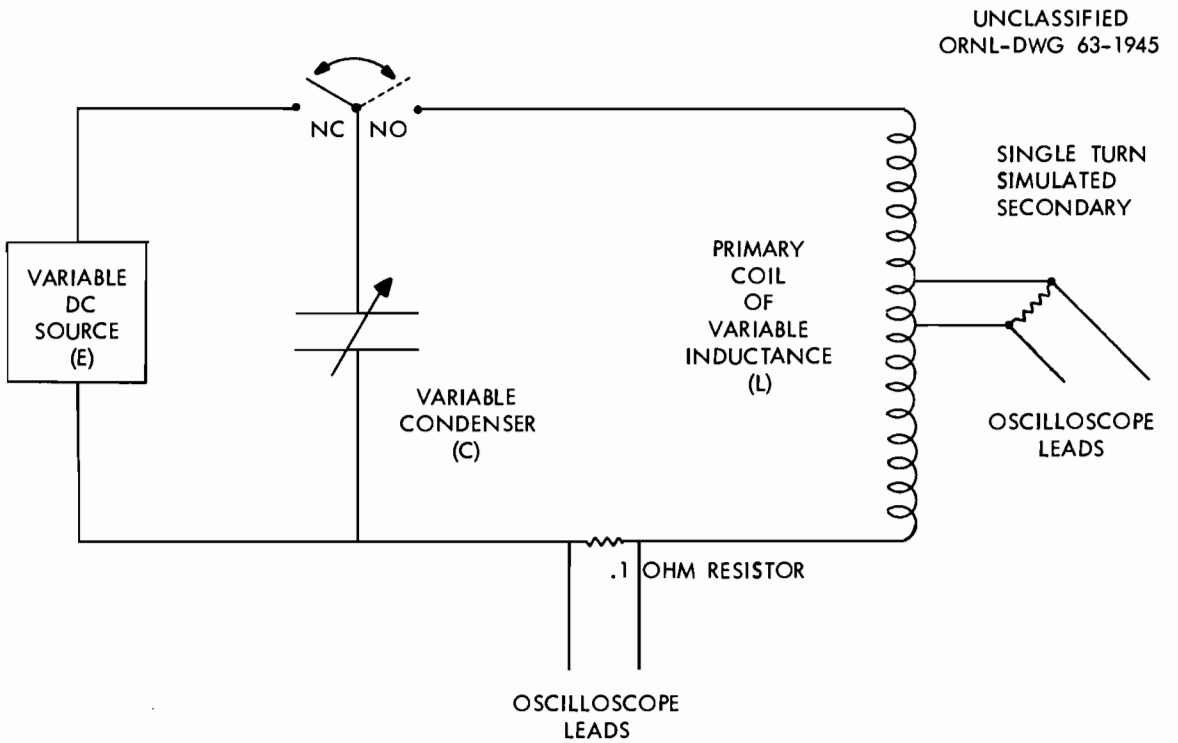

Fig. 6. Analog Computer Circuit.

Table 1. Scaling of Analog Computer Circuit

	Computer	Real
Inductance (L)	1	1
Current (i)	1	100
Capacitance (C)	1	100
Time (t)	1	10
Potential (E)	1	10
Resistance (R)	10	1

With this scaling, the goal for the computer was 0.3 volt (real 3 volt) pulse in the simulated secondary which would last for 1 ms (10 ms real). This meant that the primary circuit had to have inductance and capacitance that would give a 1 ms (10 ms real) buildup time to peak current.

The final computer setup employed a primary consisting of 150 turns of 18 gauge copper wire wound on an 8 in. length of 2 in. ID pyrex tubing. A 100 μfd capacitor at 67.5 volts discharged into the primary circuit. The primary current and secondary voltage are shown in Figs. 7 and 8, respectively.

In order to get a 3 volt, 10 ms pulse in the real secondary, a power supply of 675 volts and a coil with 150 turns, or specifically with an inductance of 4.1×10^{-4} henry, would be needed. The method of determination of the exact inductance is given in the Appendix. A 0.1 farad, 675 volt capacitor would be required. It was observed from analog values that the real setup would have maximum currents of 5000 amps in the primary and 1.2 amps in the secondary.

From these results a design was drawn up for a dissolver which should in theory dissolve 5 mg of stainless steel per hour. By merely scaling up the capacitance (Fig. 9) and voltage, larger production could be obtained. It would come as a result of having longer pulses of greater magnitude in the secondary.

UNCLASSIFIED
ORNL-PHOTO-P-61836

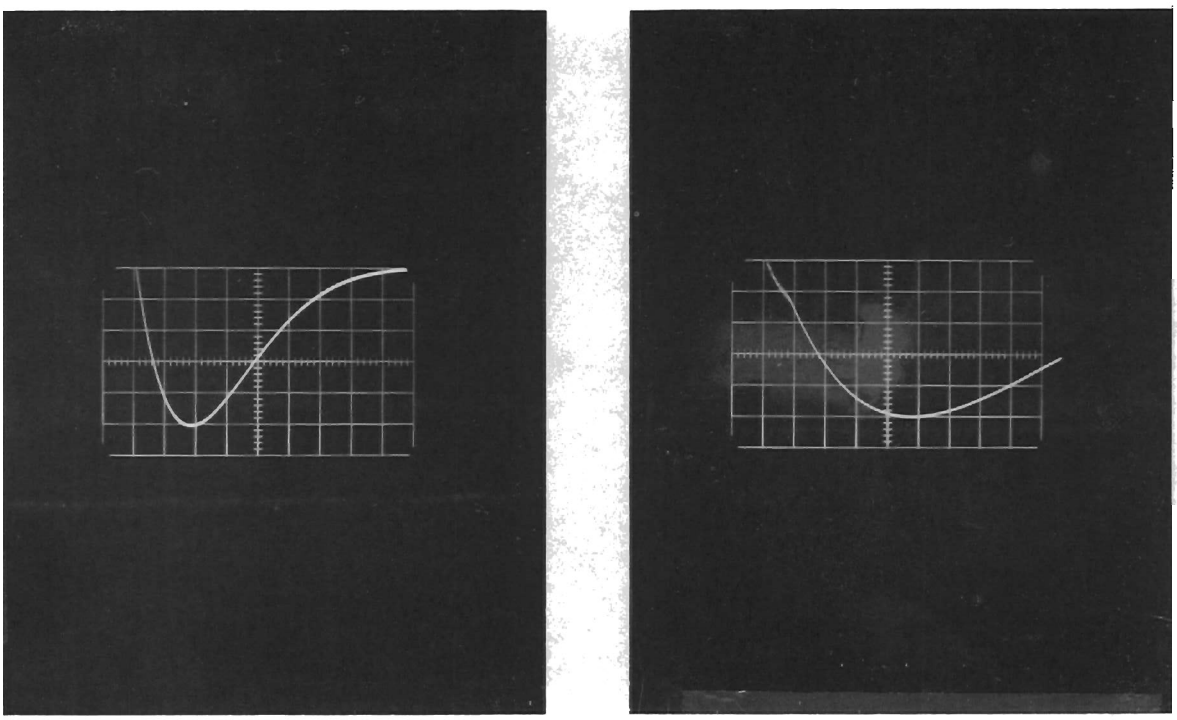

1 VOLT/CM 0.2 MS/CM 1 VOLT/CM 0.5 MS/CM

MAXIMUM CURRENT AT 10 MS REAL
MAXIMUM CURRENT = 5000 AMPERES REAL

Fig. 7. Voltage Across 0.1 ohm Resistor in Primary in Final Analog Computer Setup.

UNCLASSIFIED
ORNL-PHOTO-P-61837

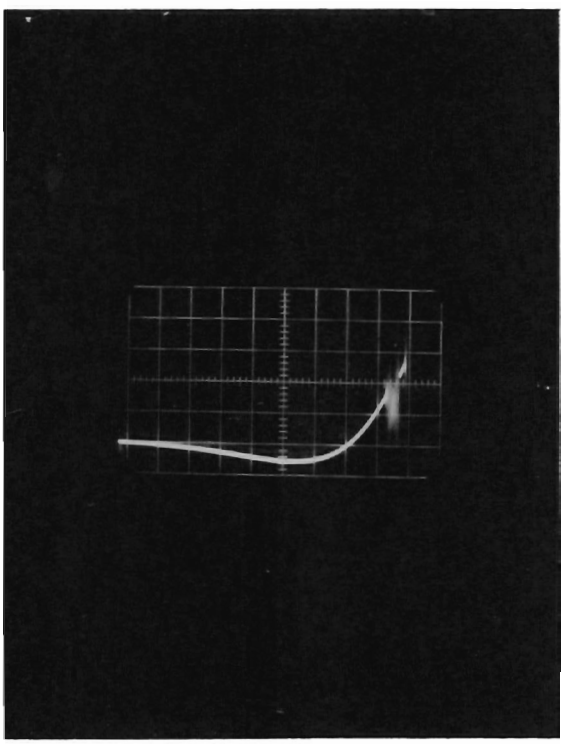

0.1 VOLT/CM 0.5 MS/CM

REAL VALUES: 3 VOLTS PEAK, 10 MS LIFE

Fig. 8. Voltage Across Secondary in Final Analog Computer Setup.

UNCLASSIFIED
ORNL-PHOTO-P 61838

1000 mfd

2500 mfd

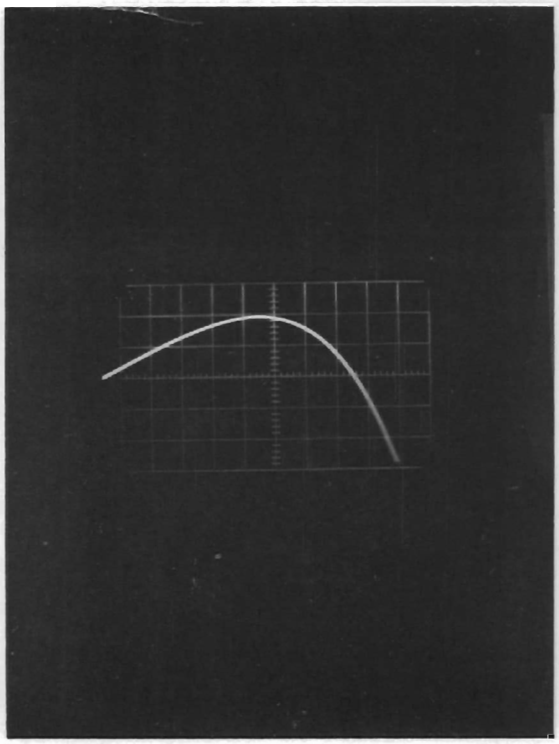

1 VOLT/CM

0.2 MS/CM

The increase in potential drop across the 0.1 ohm resistor across which the scope leads were clamped was due to the overall loss in resistance of the circuit when the two capacitors were hooked up in parallel.

Fig. 9. Effect of Capacitance on Pulse Peak Time and Life in Primary.

DESIGN CONSIDERATIONS

Costs

The available silicon control rectifiers (GE 6RW71H) have a voltage rating of 400 volts and current rating of 470 amps RMS and 5500 amps peak. The primary circuit takes 5000 amps peak current, approximately 500 amps RMS, at 675 volts maximum. Hence the primary switch would consist of two parallel sets of two control rectifiers in series. The power supply switch would be two rectifiers in series. The rectifiers cost approximately $75.00 each and would total about $450.00.

The best available capacitors (Sangamo No. 539-2689-01) are rated at 350 volts and 1250 microfarads. An 0.1 farad bank for 675 volts would require 160 parallel sets of 2. At a price of about $12.00, the bank would cost $3840.00.

The 50-ampere, 675 volt D.C. source would also be expensive, though this need be no more than a 25 KVA transformer and a full-wave rectifier.

Operating costs would also be high because of the tremendous inefficiency of the machine. In each cycle a maximum of 22,800 joules would be stored in the capacitor. On discharging into the coil only 5100 joules would be pumped into the primary magnetic field. Less than 3 joules would find their way into the secondary. This is an efficiency of about 0.01%.

Cooling Requirements

Approximately 22,000 joules of energy would have to be removed from the primary circuit each cycle to prevent overheating. By using 1/2 in. copper tubing carrying a total of flow of 16 gpm (in four parallel streams) and accepting a 70°C temperature rise, the circuit could, however, be cooled.

Each capacitor would be giving off 2 watts of heat, so a fan would suffice to cool the capacitor bank.

Mechanical Strength

At maximum current the primary coil would have to withstand a magnetic pressure ($B^2/8\pi$) of about 85 atmospheres or 70 lbs/turn. This, however, seems well within the limits of available copper tubing. By filling in the spaces between the tubing with some solid insulating material, any problems arising from axial contraction of the coil would be avoided.

CONCLUSIONS AND RECOMMENDATIONS

The conclusions are simple: the idea is possible but far from practical under present technology. As mentioned before, even the contact problem is not avoided.

The recommendation is to use the series dissolver being developed at ICPP. It shows much more promise than either the electrodeless dissolver or the anode basket type.

APPENDIX

Determination of Inductance

Although the inductive geometry was known, a determination of the exact inductance of the primary was desired.

Voltage measurements V across a known resistor R_1 were taken at various times during current buildup and with different R_1's. Figure 10 gives a diagram of the circuit. Letting E_B represent the emf impressed on the circuit and R_2 represent resistance other than R_1 in the circuit, the inductance L is computed as follows:

$$\frac{V}{R_1} = \frac{E_B}{R_1 + R_2}\left[1 - e^{-\frac{(R_1 + R_2)t}{L}}\right] \tag{4}$$

and

$$L = \frac{(R_1 + R_2)t}{-\ln\left(1 - \frac{V}{E_B} \cdot \frac{R_1 + R_2}{R_1}\right)} \tag{5}$$

By plotting $\ln\left(1 - \frac{V}{E_B} \cdot \frac{R_1 + R_2}{R_1}\right)$ vs $(R_1 + R_2)t$ on semilog paper, the inductance L can be obtained from the slope of the curve (Fig. 11). The data taken are shown in Table 2. The inductance was found to be 4.1×10^{-4} henry.

Sample Calculation of Velocity Needed to Induce 1 Volt/cm Potential Gradient in Piece of Stainless

Assume a 1000 gauss magnetic field.

$$E = BLV$$

$$3 \text{ volt} = (0.1 \text{ W/m}^2)(0.01 \text{ m}) \text{ V}$$

$$V = 3000 \text{ m/sec}$$

Expressed in terms of rpm of 3-cm diameter cylinder:

UNCLASSIFIED
ORNL-DWG 63-1946

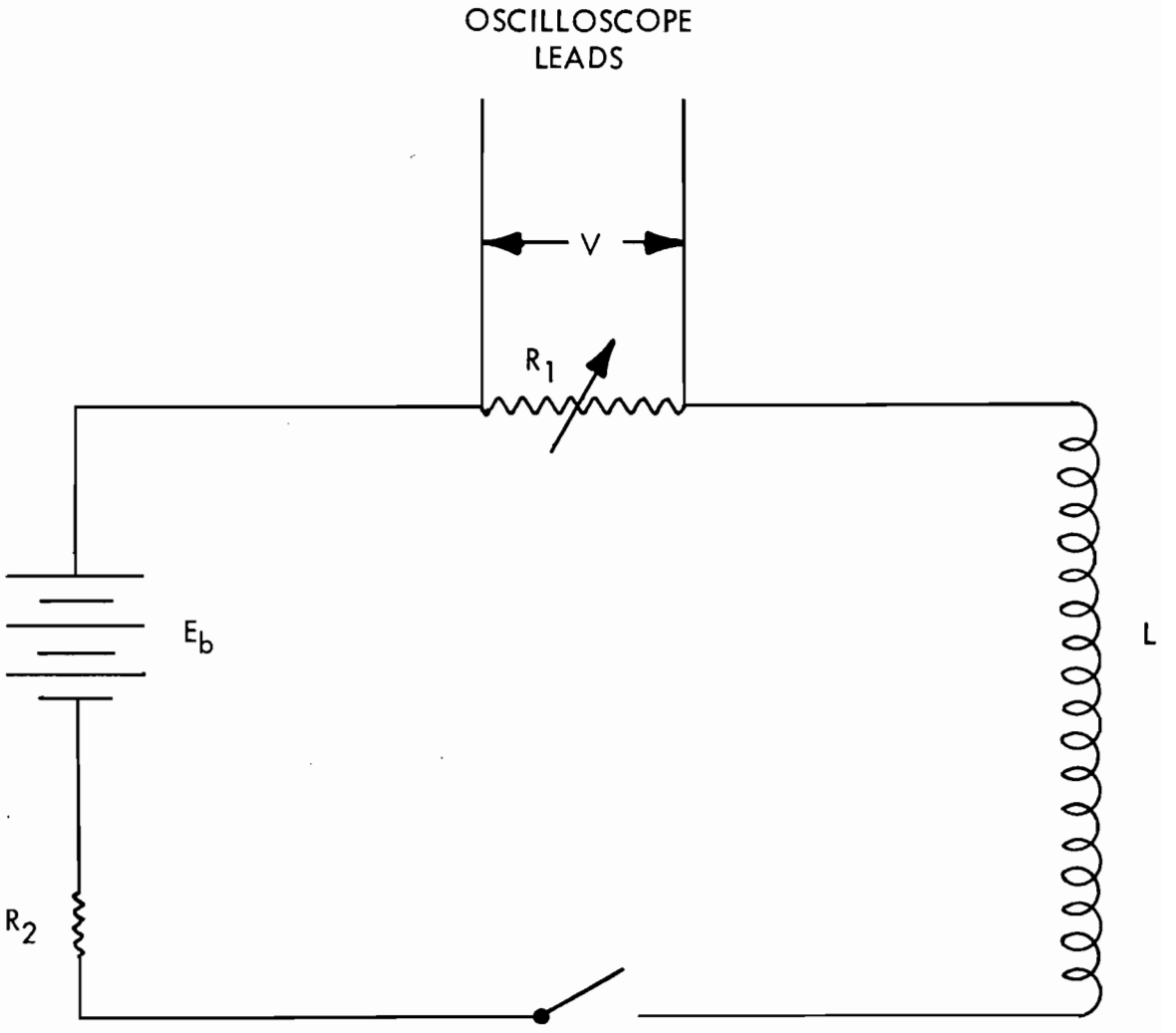

Fig. 10. Schematic of Circuit for Measurement of Inductance.

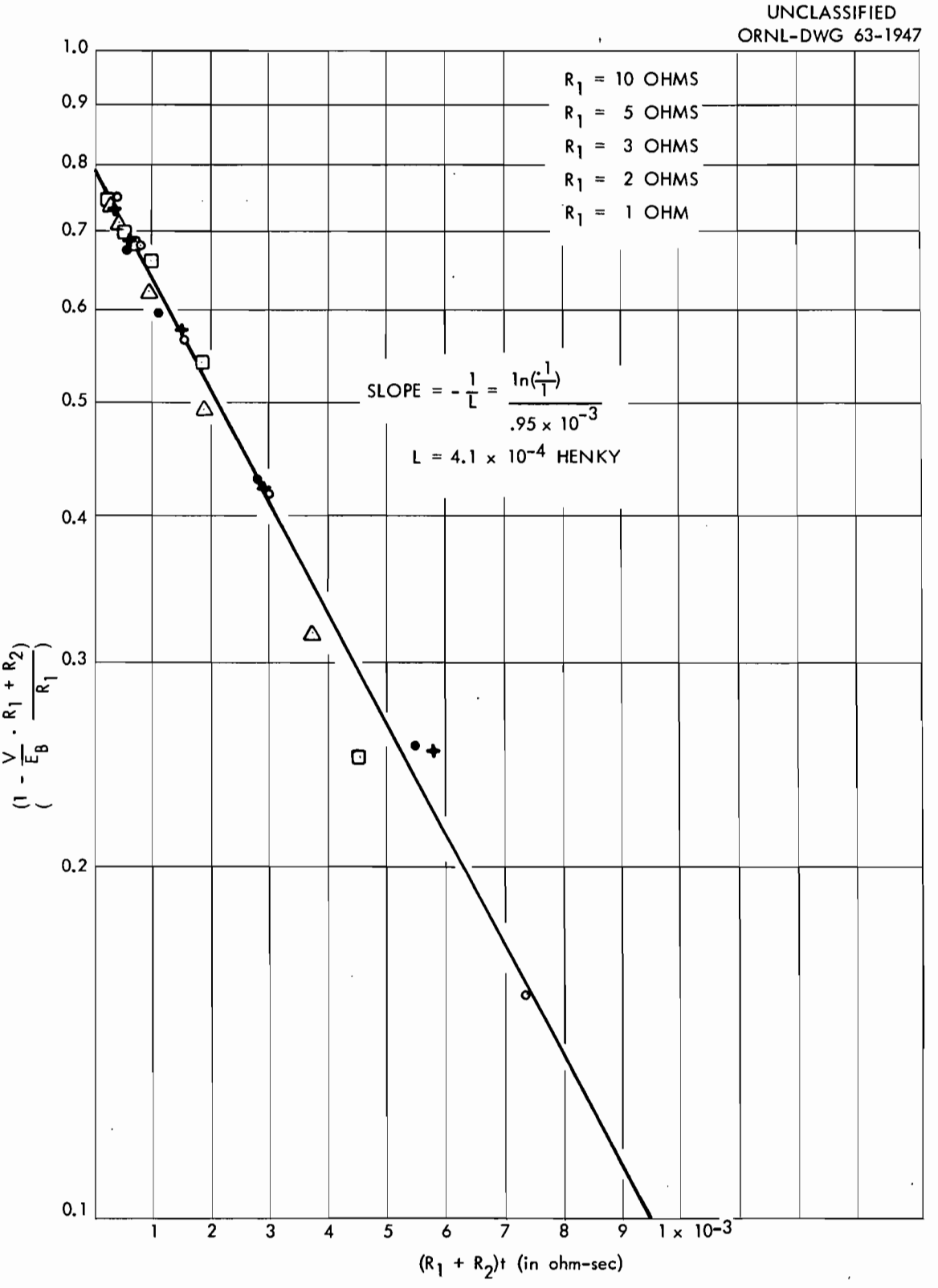

Fig. 11. Determination of Coil Inductance.

Table 2. Inductance Data

Constants for Series	V (volts)	t (μ sec)
R_1 = 10 ohms	5.3	∞
I = 0.53 amps	4.8	100
R_2 = 0.95 ohms	3.8	50
	2.6	25
	1.4	10
	0.8	5
R_1 = 5 ohms	5.0	∞
I = 1.00 amps	3.6	100
R_2 = 0.80 ohms	2.5	50
	1.5	25
	0.7	10
	0.4	5
R_1 = 3 ohms	4.7	∞
I = 1.57 amps	3.0	100
R_2 = 0.69 ohms	1.9	50
	1.1	25
	0.5	10
	0.3	5
R_1 = 2 ohms	4.1	∞
I = 2.05 amps	3.3	250
R_2 = 0.83 ohms	2.0	100
	1.2	50
	0.6	25
	0.25	10
R_1 = 1 ohm	3.2	∞
I = 3.20 amps	2.0	250
R_2 = 0.81 ohms	1.1	100
	0.6	50
	0.4	25
	0.2	10

$$\pi df = V$$

$$\pi\ (0.03\ \text{m})f = 3000\ \text{m/sec}$$

$$f = 31{,}800\ \text{rps} = 2{,}508{,}000\ \text{rpm}$$

DISTRIBUTION

1. R. E. Blanco
2. J. C. Bresee
3. R. E. Brooksbank
4. K. B. Brown
5. F. R. Bruce
6-10. C. V. Chester
11. F. L. Culler, Jr.
12-16. C. A. Erdman
17. D. E. Ferguson
18. H. E. Goeller
19. H. B. Graham
20. A. T. Gresky
21. P. A. Haas
22. R. W. Horton
23. E. Lamb
24. A. D. Ryon
25. M. J. Skinner
26. J. C. Suddath
27. C. D. Watson
28. M. E. Whatley
29. R. G. Wymer
30-32. Laboratory Records
33. Laboratory Records (RC)
34-35. Central Research Library
36-37. Document Reference Section
38. ORNL Patent Office
39. Research and Development Div. (ORO)
40-54. DTIE

DESIGN CONSIDERATIONS

Costs

The available silicon control rectifiers (GE 6RW71H) have a voltage rating of 400 volts and current rating of 470 amps RMS and 5500 amps peak. The primary circuit takes 5000 amps peak current, approximately 500 amps RMS, at 675 volts maximum. Hence the primary switch would consist of two parallel sets of two control rectifiers in series. The power supply switch would be two rectifiers in series. The rectifiers cost approximately $75.00 each and would total about $450.00.

The best available capacitors (Sangamo No. 539-2689-01) are rated at 350 volts and 1250 microfarads. An 0.1 farad bank for 675 volts would require 160 parallel sets of 2. At a price of about $12.00, the bank would cost $3840.00.

The 50-ampere, 675 volt D.C. source would also be expensive, though this need be no more than a 25 KVA transformer and a full-wave rectifier.

Operating costs would also be high because of the tremendous inefficiency of the machine. In each cycle a maximum of 22,800 joules would be stored in the capacitor. On discharging into the coil only 5100 joules would be pumped into the primary magnetic field. Less than 3 joules would find their way into the secondary. This is an efficiency of about 0.01%.

Cooling Requirements

Approximately 22,000 joules of energy would have to be removed from the primary circuit each cycle to prevent overheating. By using 1/2 in. copper tubing carrying a total of flow of 16 gpm (in four parallel streams) and accepting a 70°C temperature rise, the circuit could, however, be cooled.