OAK RIDGE NATIONAL LABORATORY

operated by

UNION CARBIDE CORPORATION

for the

U.S. ATOMIC ENERGY COMMISSION

ORNL-TM-437

36

OAK RIDGE NATIONAL LABORATORY LIBRARIES

3 4456 0548794 2

ISOTOPES DEVELOPMENT CENTER

PROGRESS REPORT

RADIOISOTOPE APPLICATIONS

JULY - SEPTEMBER 1962

CENTRAL RESEARCH LIBRARY
DOCUMENT COLLECTION
LIBRARY LOAN COPY
DO NOT TRANSFER TO ANOTHER PERSON
If you wish someone else to see this document, send in name with document and the library will arrange a loan.

NOTICE

[redacted]

LEGAL NOTICE

This report was prepared as an account of Government sponsored work. Neither the United States, nor the Commission, nor any person acting on behalf of the Commission:

A. Makes any warranty or representation, expressed or implied, with respect to the accuracy, completeness, or usefulness of the information contained in this report, or that the use of any information, apparatus, method, or process disclosed in this report may not infringe privately owned rights; or

B. Assumes any liabilities with respect to the use of, or for damages resulting from the use of any information, apparatus, method, or process disclosed in this report.

As used in the above, "person acting on behalf of the Commission" includes any employee or contractor of the Commission, or employee of such contractor, to the extent that such employee or contractor of the Commission, or employee of such contractor prepares, disseminates, or provides access to, any information pursuant to his employment or contract with the Commission, or his employment with such contractor.

OAK RIDGE NATIONAL LABORATORY LIBRARIES

3 4456 0548794 2

ORNL-TM-437

ISOTOPES DEVELOPMENT CENTER

PROGRESS REPORT

RADIOISOTOPE APPLICATIONS

July - September 1962

Compiled by:

H. A. O'Brien, Jr.

Contributions by:

R. G. Niemeyer
W. L. Powers *

* Summer Research Participant

Date Issued

FEB - 6 1963

OAK RIDGE NATIONAL LABORATORY
Oak Ridge, Tennessee
operated by
UNION CARBIDE CORPORATION
for the
U. S. ATOMIC ENERGY COMMISSION

TABLE OF CONTENTS

1.0. Review of Nuclear Battery Construction and Application. . . . 1

1.1. Introduction 2
1.2. Constant-Current Cell. 3
1.3. p-n Junction Cell. 6
1.4. Contact-Potential-Difference Cell. 8
1.5. Double Conversion Cell 11
1.6. Applications 12

2.0. Radioactive Locator Beacon 17

2.1. Introduction 17
2.2. Conceptual Design. 17
2.3. Experimental Results 20

RADIOISOTOPE APPLICATIONS

H. A. O'Brien, Jr.

ABSTRACT

The review of nuclear battery construction and application includes: (1) the principles utilized in developing a nuclear battery; (2) the major problems such as insulation breakdown and radiation damage to materials in contact with the source; (3) battery design and efficient dielectrics. Several nuclides are compared for possible use as battery components.

The attachment of a Co^{60} source to the flight-recorder of an airplane has been investigated for use in locating the instrument in the event of a crash.

1.0 REVIEW OF NUCLEAR BATTERY CONSTRUCTION AND APPLICATION

1.1. Introduction

A nuclear battery is a device which is capable of delivering a few microwatts of power and which is, in contrast to the electrochemical or solar cell, inherently free from temperature and environmental factors. The main components of the battery are the source and the converter; an enclosure is also necessary as a protective shield. The power of the source is determined by the rate of decay of the nuclide and the energy of the emitted radiation. Since there is no problem of fuel depletion for a long-lived isotope, the battery life is limited only by the breakdown of the converting device which transforms the radioactive energy to electrical energy.

The first direct conversion of radioactive decay energy into electrical energy was performed by Moseley in 1913 by suspending a radium sphere inside a second sphere which acted as the anode collecting the emitted beta particles. Voltages up to 100 kev were obtained.

Recent developments in nuclear batteries have centered around four basic cell types--the constant-current cell, the p-n junction cell, the contact-potential-difference cell, and the double conversion cell. The constant-current cell collects the emitted betas without any current magnification. The p-n junction cell magnifies the beta current and decreases its voltage by means of a diode junction. The contact-potential-difference cell employs a radioactive gas confined between the anode and a cathode made of two dissimilar metals; the output potential is the difference in the work function of the two metals. A phosphor used in the double conversion cell converts the beta to light energy which is then transformed to electrical energy by a photocell.

The geometrical design of a particular cell type is partly determined by the physical form of the beta source--that is, gas, powder, or metal. The shape and thickness of the source are determined by its self-absorption coefficient. When materials with high self-absorption coefficients are used, a very thin source is necessary to obtain maximum use of the electrons. The design of the source is further determined by the dielectric which separates the emitter from the collector. A dielectric which will not appreciably absorb the beta energy and which will not break down under the high voltage developed by the betas is desirable. The effects of radiation on various dielectrics and insulators such as decreased dielectric resistance and lattice defects have been investigated. Also important to the design is the choice of collectors which have low secondary-electron emission and little outgassing.

The efficiency of the four main types of nuclear batteries is low, for both theory and experiment show that 2% energy conversion seems maximum. This value differs by only a few percent from present thermoelectric converters which convert 4-5% of the beta energy to electrical energy.

1.2. Constant-Current Cell

In the constant-current cell, high speed betas emerging from the isotope, which is coated on an emitter electrode, penetrate an insulating medium and are collected by a conducting electrode which then becomes negatively charged. The insulating medium between the electrodes may be a vacuum or a dielectric. This type cell has the greatest voltage and the least current of the four types, for there is no magnification of the current.

A constant-current cell using Sr^{90}-Y^{90} is shown in Fig. 1.2.1. Two millicuries of Sr^{90}-Y^{90} was impregnated in a small gold leaf, 0.001-in. thick (after the leaf was degassed and free from oil), and the leaf was

attached to one end of a 0.001-in. stainless steel foil. An aluminum cylinder was wrapped with 0.015 in. of polystyrene dielectric and the leaf placed around it. The cylinder was then covered with 0.015 in. of polystyrene so that the aluminum electrode collects the betas emitted in all directions. Natural mica, Styron-647, and Corning-1723 borosilicate glass have been determined to be better insulators. The available current calculated for a 2-mc Sr^{90}-Y^{90} source is 12×10^{-12} amps. The average energy (0.91 Mev) of the Y^{90} high energy beta is used in calculating the power since the Sr^{90} beta and the other low energy betas of Y^{90} do not affect the rough calculation. The available power obtained by multiplying the voltage by the current is 10.9 μw. With an assumed power conversion of 2%, the output of power of this battery is ~ 0.22 μw.

There are two major causes for the low conversion factor. First, secondary electrons are ejected on impact of the primary betas with the collector surface and are attracted back to the source by the positive electric field (Fig. 1.2.2). These secondary electrons decrease the collected electric charge and thus limit the output current. At present, collector surfaces are only ~ 50% effective--that is, the ratio of secondary emission to primary impact is 1/2. The second cause of the low conversion factor is that the voltage across the external terminals rises to several thousand volts and leakage produced by air ionization around the terminals limits further voltage increase.

When a solid dielectric separates the emitter and collector electrodes, a compromise must be made. A thick dielectric is desired in order to give the maximum voltage breakdown; however, a thin dielectric is desired to minimize beta absorption, since the power output is proportional to the number of betas reaching the collector. A plot of range versus beta energy for a given dielectric must be known, as well as the mean energy of the beta.

UNCLASSIFIED
ORNL-LR-DWG. 76351

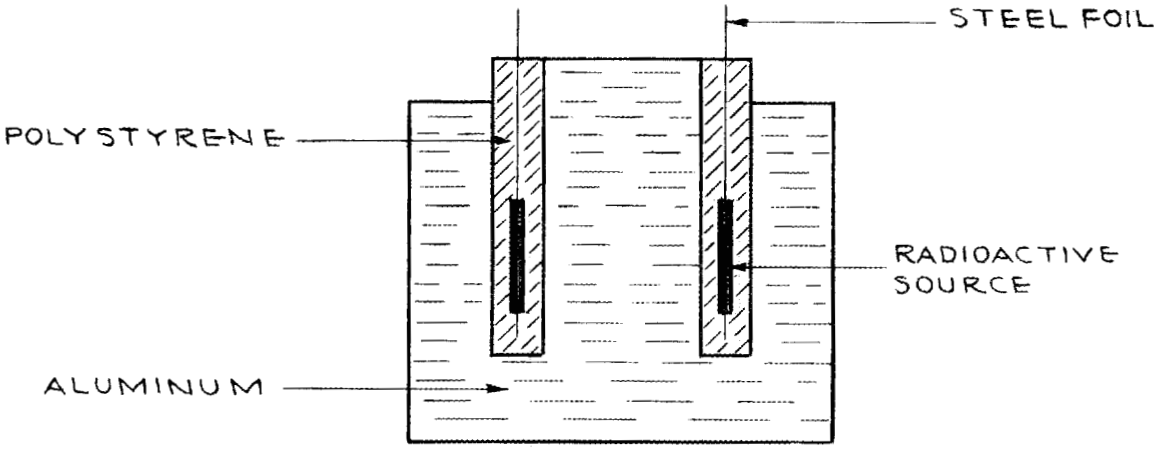

Fig. 1.2.1. Constant-Current-Charging Nuclear Battery: A Cross Sectional View.

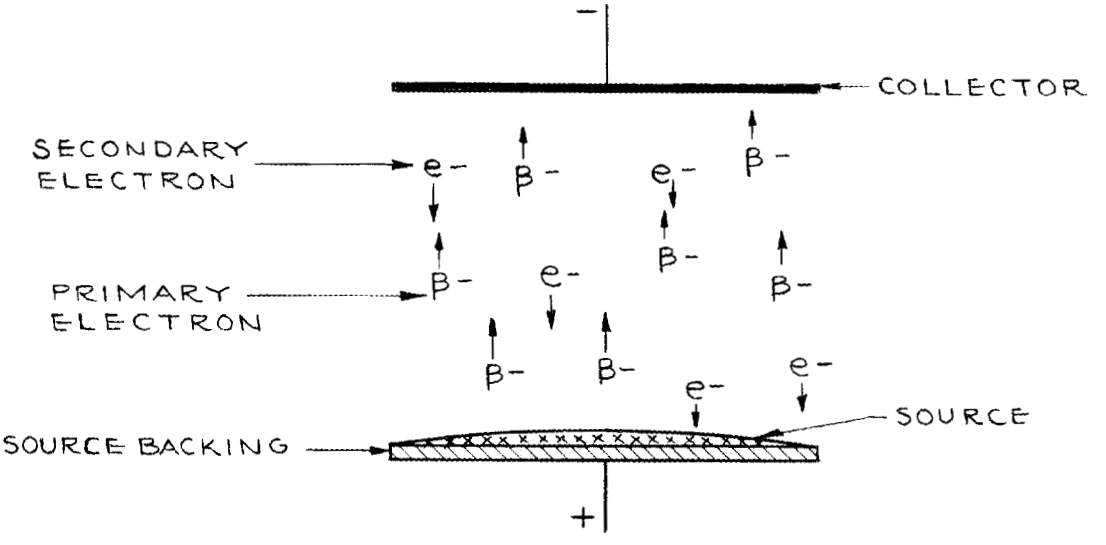

Fig. 1.2.2. Ejection of Secondary Electrons upon Impact of Primary Electrons with the Collector Surface.

The resistance of most insulators when exposed to beta radiation was observed to decrease in time to a minimum and then increase thereafter. Thus, the insulators, in bulk form or after fabricating and molding into position, were irradiated to the maximum resistance region before use in the cell. In doing so, the leakage current through the insulator was minimized.

Another example of a constant-current, direct-charging nuclear battery is the Kr^{85} gas battery, shown in Fig. 1.2.3. The filling tube by which the gas source is introduced into the glass chamber serves as the anode; the cathode is a copper coating which collects the electrons. The battery contains ~ 1 cc of Kr^{85}, corresponding to 110 μw of radioactive power. The battery has a 2-μw output which is ~ 1.8% power conversion.

Tritium-zirconium sources have been investigated and used to make a working H^3 model.

It has been shown that carbon collectors in gas-filled batteries show an erratic current output with time due to outgassing of the carbon. Thus, methods reducing the gas content should be studied if a carbon electrode is desired.

1.3 The p-n Junction Cell

A high-energy beta impinging on a p-n diode produces many hole-electron pairs. If the pairs are produced less than an electron diffusion length from the p-n junction, most of the electrons travel toward the n side and the holes toward the p side of the junction. These separated pairs produce a forward bias on the junction and deliver power to a load. Junction cells thus convert a small current of high voltage electrons into a much larger current of low voltage electrons. The current multi-

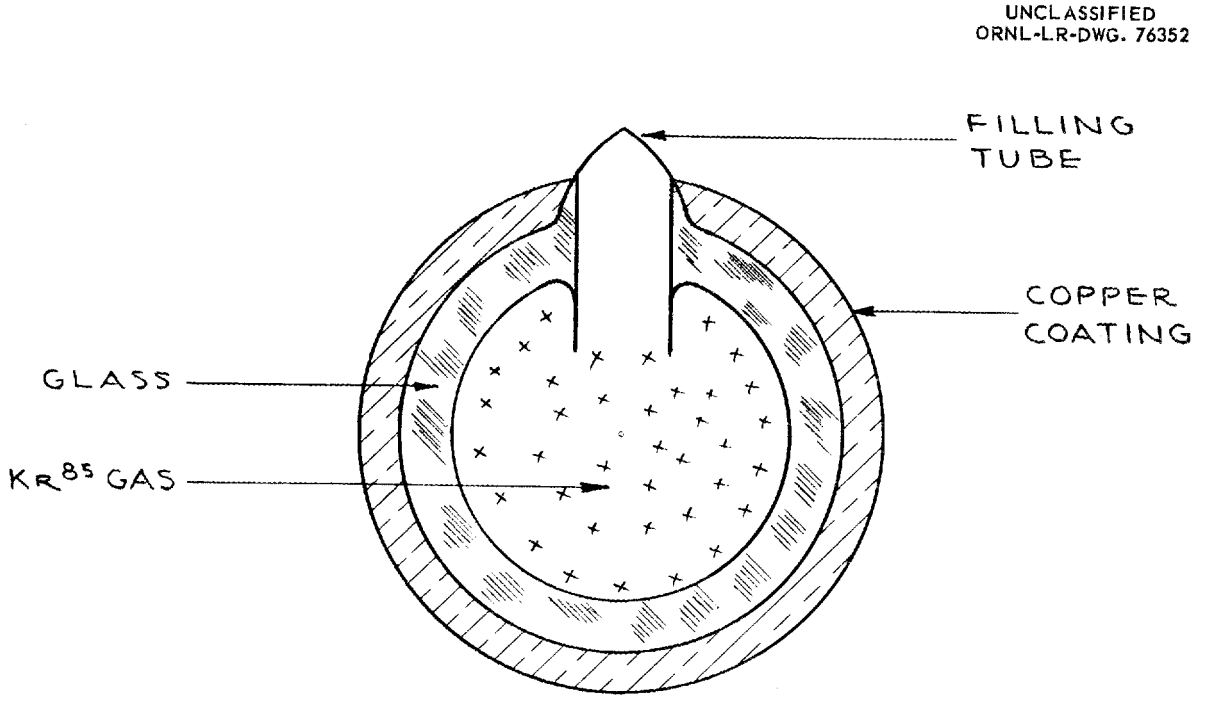

Fig. 1.2.3. Gas-Filled, Direct-Charging Nuclear Battery.

plication for silicon is ~ 1.5×10^5 and for germanium ~ 1.9×10^5. The p-n junction type battery delivers currents of a few microamperes at a few tenths of a volt.

A typical p-n junction cell is shown in Fig. 1.3.1. A source of 50 mc of Sr^{90} corresponding to 200 μw of radioactive power has been used for both silicon and germanium junctions. Because of volume and surface recombination, back scattering, bucking currents, junction leakage, and source self-absorption, an output of only 1 μw was obtained which corresponds to an energy-conversion efficiency of about 0.5%. Currents of 10 μa at 250 mv were observed for silicon and 20 μa at 30 mv for germanium. Silicon has a higher efficiency than germanium principally because of the larger junction resistance.

This cell failed after a few weeks' operation due to the production of lattice defects. If the beta energies exceed a certain value, the Frenkel defects created cause a relatively fast decrease of output current due to an increase in the recombination velocity of electrons and holes in the structure. The theoretical and experimental value for the threshold energy for radiation damage in silicon is ~ 300 kev and in germanium is ~ 600 kev. To use either silicon or germanium in the p-n cell, a source whose beta energy is less than the threshold energy for lattice defects is necessary.

1.4. Contact-Potential-Difference Cell

The contact-potential-difference type, shown in Fig. 1.4.1 is capable of delivering a few millimicroamperes at a few volts.

An electron traveling through a heavy gas such as argon will produce ion-electron pairs, each pair absorbing about 30 ev from the electron. For each initial electron, ~ 100 ion-electron pairs will be produced

UNCLASSIFIED
ORNL-LR-DWG. 76353

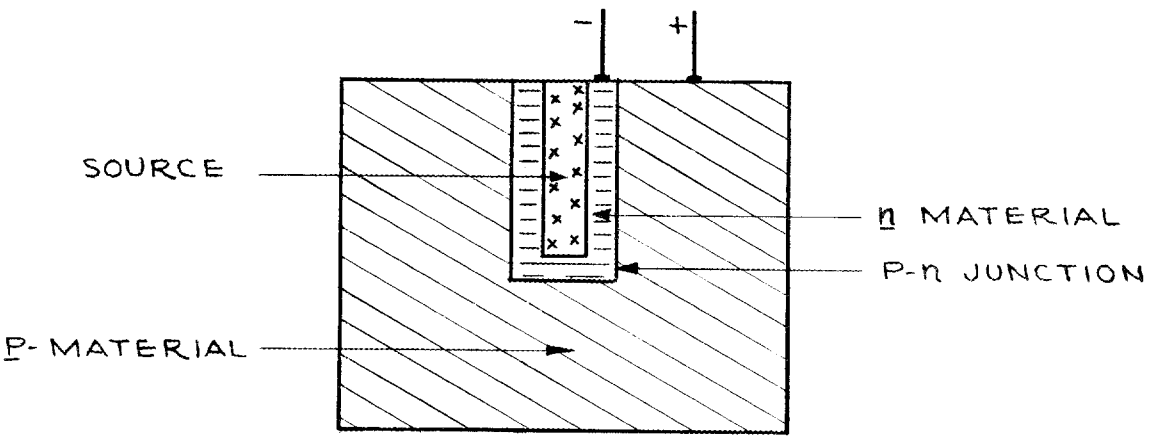

Fig. 1.3.1. p-n Junction Nuclear Battery.

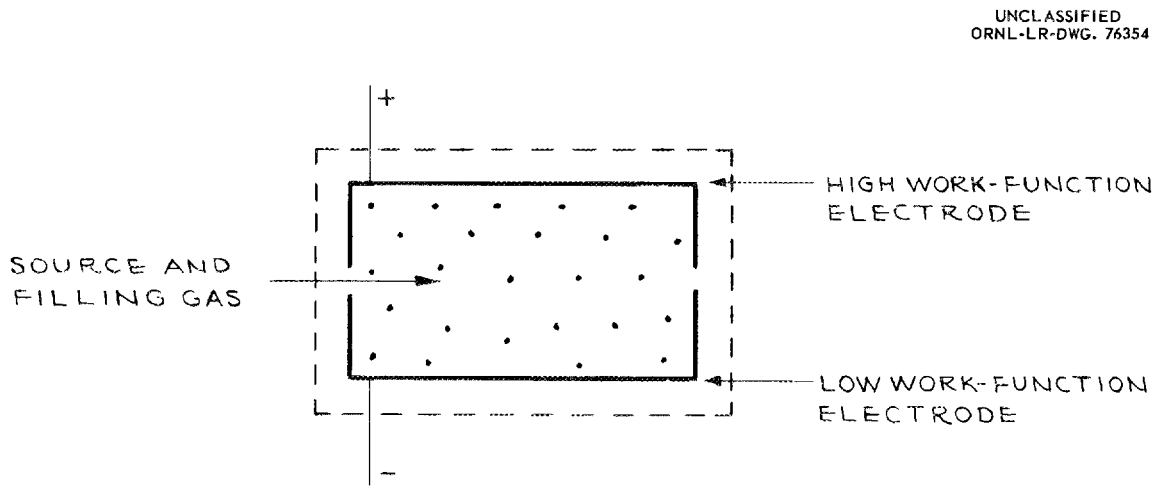

Fig. 1.4.1. Contact-Potential-Difference Cell.

giving a current magnification and a voltage decrease. By enclosing the gas with two metal electrodes of different work functions which are connected by an external load, the gas ions will be collected on the electrode of opposite charge. The current is dependent on the source material; the potential is the difference between the work functions of the two electrodes. The open circuit voltage between an alkali metal electrode such as lithium with a work function of 2.39 ev and a noble metal electrode such as gold with a work function of 4.58 ev would be 2.10 ev. Although the work functions of the metals are known, the problem has been to determine a couple having a high contact-potential-difference without ingassing and without varying appreciably with time and temperature.

Electrodes of Al-PbO_2, Pb-PbO_2, and Al-C have been used with a mixture of tritium and argon as the filling gas to obtain currents of 100 mμa at 1 v. The results indicated that the output current varied with temperature and was not linear with source size and that the voltage across the load was erratic with time.

A cell using Mg-PbO_2 electrodes and new inorganic insulation throughout to minimize leakage provided a much more stable current and voltage. The inorganic insulators increased the temperature range and decreased the ingassing; preirradiated Alsimag-243 seemed to provide the best terminal insulator surface. Results show that tritium is the most promising isotope for use in the gaseous-ionization, contact-potential-difference battery and that 2% power conversion is a maximum.

1.5. Double Conversion Cell

The transformation of beta energy to light energy and then to electrical energy is called double conversion. A double-conversion cell

~ 1/2 by 1/4 in. has been developed using Pm^{147}. To form the source, 5 mg of Pm_2O_3 powder containing 4.5 curies was mixed with 50 mg of powdered phosphor containing either cadmium sulfide, zinc sulfide, or both. The emitted betas are absorbed after traversing 0.01 cm in the phosphor and produce light in the red and infrared regions. The light passes through the source container made of transparent, radiation-resistant plastic, impinges on a silicon photoelectric or photojunction surface which surrounds the source, and liberates photoelectrons from the surface. Of the 1800 μw of available radioactive energy, only 1% was converted to electrical energy, yielding an output of 20 μa at 1 v.

Further studies have shown that the factor limiting the efficiency was the thickness of the luminophor layer which absorbed its own illumination. A thickness of 0.02 cm (80 mg/cm^2) was suggested.

The basic advantage of the double conversion battery is that the silicon photocell, which is sensitive to lattice defects, is protected from the beta radiation of the isotope; only the phosphor is subjected to radiation, to which its resistance is relatively high.

1.6. Applications

The small size and long life of nuclear batteries should make them useful in such instruments as radios, hearing aids, wrist watches, and the cutie-pie ionization chamber, which requires only 90 v and 1 mμa of current.

A constant voltage power supply, another application of the nuclear battery, is shown in Fig. 1.6.1. The capacitor is charged until the proper voltage is reached, after which the regulating diode maintains this voltage.

UNCLASSIFIED
ORNL-LR-DWG. 76355

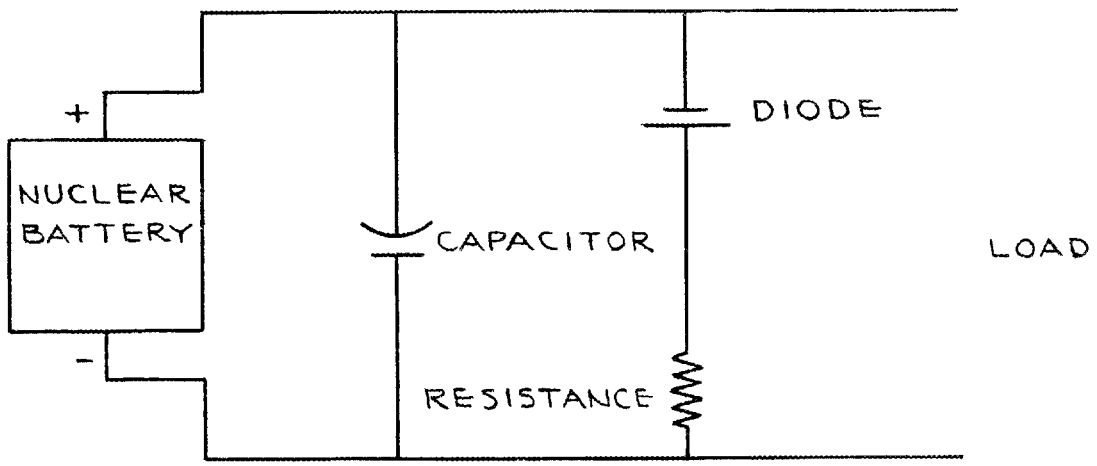

Fig. 1.6.1. Constant-Voltage Power Supply.

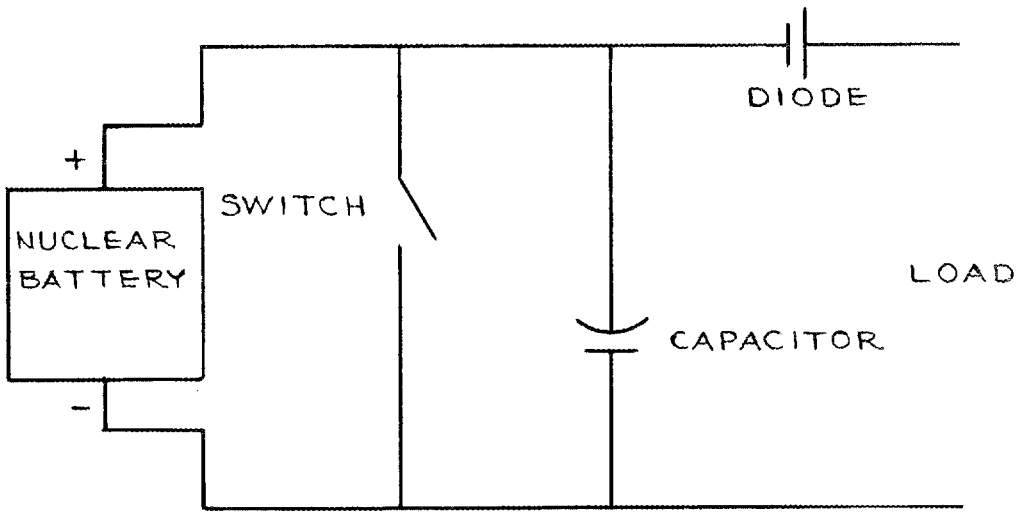

Fig. 1.6.2. Nuclear-Battery-Powered Switching Device.

A self-powered system with only one moving part for delivering a time-delayed electrical signal to a load is shown in Fig. 1.6.2. The capacitor size and breakdown voltage of the cold cathode diode determines the time delay between the switch opening and the discharge of the capacitor through the diode to the load. An example of its use as a self-contained actuating impulse is in an acceleration "g" senser using an inertia switch. The self-powered system could be used as an altitude or pressure sensing switch system. One-shot trigger devices for firing squibs, primers, and detonators could also be made. Other uses of nuclear batteries include electrostatic generators, counting devices, reset devices, and relay operations.

Various beta-emitting isotopes used as sources in nuclear batteries are compared in Table 1.6.1. The values shown for the cost per microwatt of available power are dependent upon the cost per curie and the average beta energy. On a cost-per-microwatt basis, a Sr^{90}-Y^{90} source appears the most practical. However, due to the toxicity of strontium and the greater shielding necessary for the high-energy beta, Pm^{147} is generally preferred as the battery source.

The variables affecting the values for the amount of source material required to produce a 1-μw output given in the last column of Table 1.6.1 are the specific activity and the average beta energy.

Krypton-85 and tritium are particularly useful in the contact-potential-difference type battery in that either of the two may be mixed with the filling gas, in addition to the beta-emitting, plated source material. The combination of the two beta emitters enhances the power output of the battery.

The properties of Tc^{99}, from Table 1.6.1, appear to limit its use in nuclear batteries as compared with the other listed isotopes. The

TABLE 1.6.1

Comparison of β^--emitting Isotopes as Possible Nuclear Battery Sources

Radio-isotope	Half-life in Years	Source Form	Specific Activity	Cost per Curie	Average β-Energy in kev	Cost/μw of available power	Amt. of source needed to give power output of one μw at 2% efficiency
Tc^{99}	2×10^5	Metal or TcO_2	0.016 c/gm	$5,900	86	$11.60	6,125 mg
Pm^{147}	2.5	Pm_2O_3	400 c/gm	2	64	0.005	0.3 mg
Sr^{90}-Y^{90}	28	$SrTiO_3$	40 c/gm	1	910	0.0002	0.2 mg
Kr^{85}	10	Gas	0.08 c/cc	10	227	0.007	0.5 cc
H^3	12	Gas	2.6 c/cc	2	4	0.08	0.8 cc

disadvantages, however, may be balanced in the p-n junction cell, where high current and low voltage are desired. The maximum beta energy of Tc^{99} (290 kev) is less than the threshold energy for the production of lattice defects in either silicon or germanium (300 and 600 kev respectively). A Tc^{99} junction cell might have a long life whereas all previous p-n cells using other isotopes have failed in ~ 2 weeks.

2.0. RADIOACTIVE LOCATOR BEACON

2.1. Introduction

The Federal Aviation Agency has in recent years been concerned by the loss of flight-recording instruments which have been torn away from the fuselage of the aircraft during the impact of a crash. The rapid recovery of this instrument is considered essential. A radioactive locator beacon has been proposed as a means of locating the protected tape deck of the recorder, especially in instances where it may be under water or imbedded in mud.

The beacon should be attached to or located within the tape deck itself, should not operate until a predetermined "G" force has been applied, and should have a long life, low weight, small size, and crash survivability. The nature of the source radiation and the amount present in the beacon should yield a range of detection of at least 10 ft in air, 3 ft in sea water, and 2 ft in earth. In addition, the equipment should be so designed that, when it is mounted anywhere in the aircraft, persons may work nearby for prolonged periods of time without exceeding current standards of safe radiation dosage. Finally, the beacon should have a shelf-life (non-operating condition) of at least 6 months followed by an operating-life of 14 days after a crash and should require no external power.

2.2. Conceptual Design

A 7.8 mc Co^{60} source enclosed in a stainless steel capsule is mounted at the center of a 4-in., spherical, uranium shield. The sphere is designed so that it will separate into two sections, the larger of which will fall away exposing the radioactive source. The smaller section to which the radiation source is attached is held firmly to the protected

tape deck by a mounting bracket. In the event of a crash, the tape deck will be located by a portable, scintillation-type instrument. The total weight of the proposed locator beacon is 30 lbs. A cross sectional view of the beacon is shown in Fig. 2.2.1.

Cobalt-60 was selected as the source for radiation since it provides the required gamma radiation to penetrate 3 ft of water and will function satisfactorily in the environmental conditions specified by the FAA. A very small source is necessary to minimize the amount of shielding required and to reduce the radiation hazards involved in the recovery operation.

The selection of uranium rather than lead for shielding is necessitated by the requirements of crash survivability. A protective metal coating will be placed around the uranium to prevent its oxidation in the event of fire.

Two trigger mechanisms have been proposed for separating the two sections of the uranium shield and exposing the source. First, the removable section of the shield is attached to the source-containing section with shear pins; the other end is firmly anchored to the fuselage. Upon impact, the entire tape deck assembly will continue moving forward by virtue of its inertia. The removable section will be held back, the shear pins will break, and the source will be exposed. The second trigger mechanism uses explosive bolts to attach the uranium shield to the source mount. At a predetermined impact shock the bolts explode and the shield falls away, thereby exposing the source.

A stainless steel guard is placed over the end of the source to prevent its being dislodged after the shield has fallen away. An alternate method is to attach the source to the instrument by means of a chain so that all shielding could be dropped away at the moment of impact. This method would increase the effective angle of unshielded radiation to 360°.

UNCLASSIFIED
ORNL-LR-DWG. 76356

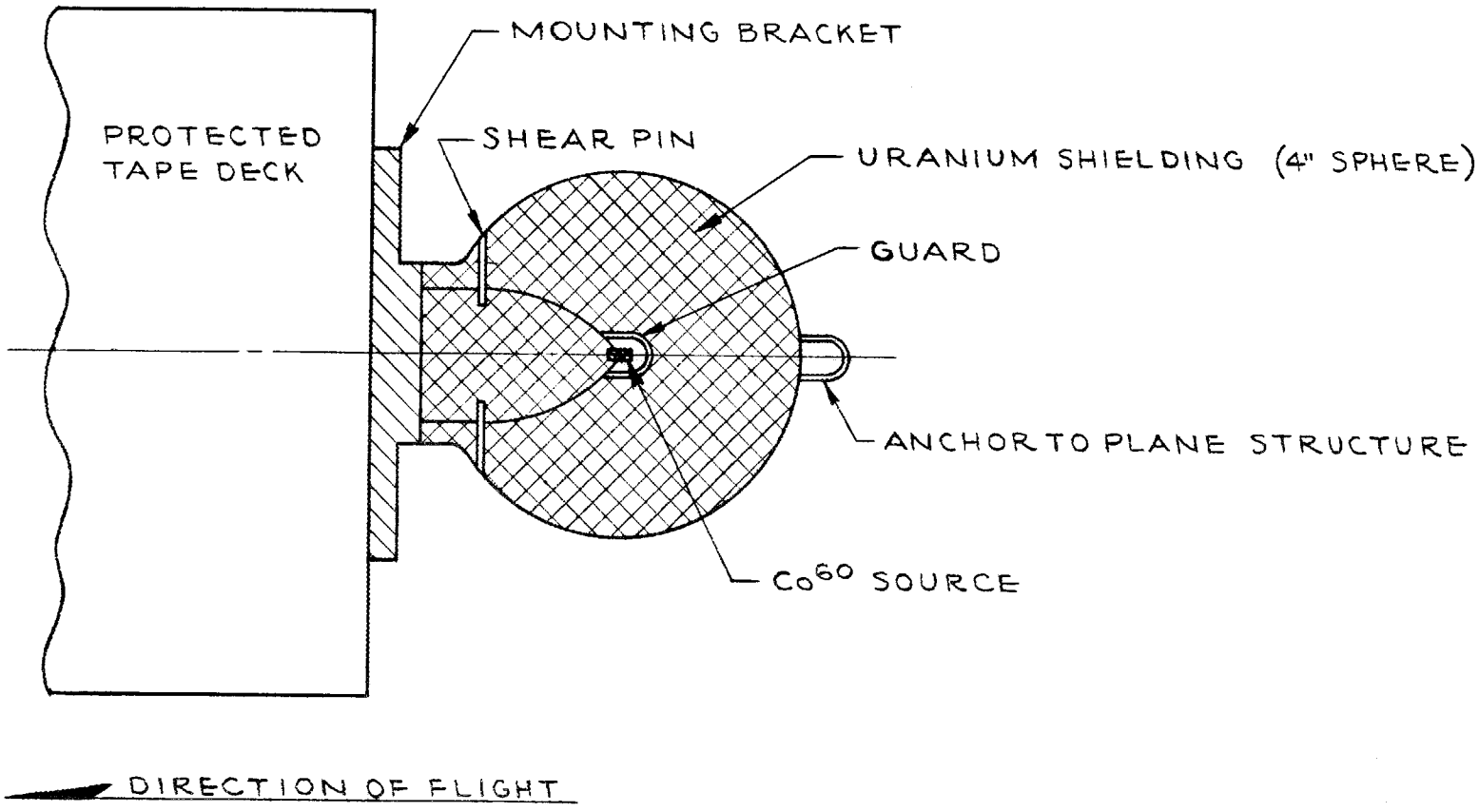

Fig. 2.2.1. Radioactive Locator Beacon.

2.3. Experimental Results

Radiation measurements have been made in mud, water, and air by use of test equipment set up in a manipulator cell (see Fig. 2.3.1). The dosage was measured in air at distances of 30, 39.4, and 47 in. from the source. From these data the strength of the Co^{60} source was calculated to be 2.38 curies.

The source was contained in a 1/4-in.-diam by 19/32-in.-long stainless steel capsule, which was then placed inside a 5/16-in.-diam hole drilled in the end of a 2-1/2-in.-diam lead cylinder. The effect of scattered radiation in the cell was minimized by placing lead brick shielding around both the source and the detector.

In order to obtain measurements through mud and water, three boxes (12 x 12 x 12 in. ID) made of 1/2-in. plywood were placed end-to-end between the source and the detector. The boxes were lined with a thin sheet of plastic to prevent leakage of the mud and water. The results of the test measurements are listed in Table 2.3.1. Figures 2.3.2, 2.3.3, and 2.3.4 show the variation of the log of the dose rate with varying amounts of mud, water, and air placed between the source and the detector. Table 2.3.2 contains a list of calculated dosages from small Co^{60} sources.

TABLE 2.3.1

Cobalt-60 Source Measurements in Simulated Air, Mud, and Water Conditions

Absorption Medium	Distance From Source (in.)	Dose
Air	30	6.8 r/hr
Air	39.4	3.1 r/hr
Air	47	2.3 r/hr
3 empty boxes	47	1.1 r/hr
1 box water - 2 empty boxes	47	300 mr/hr
2 boxes water - 1 empty box	47	82 mr/hr
3 boxes water	47	26 mr/hr
1 box mud - 2 empty boxes	47	145 mr/hr
2 boxes mud - 1 empty box	47	14 mr/hr
3 boxes mud	47	1 mr/hr

TABLE 2.3.2

Calculated Dosages in Small Cobalt-60 Sources

Co^{60} Source (mc)	Calculated Environmental Readings (mr/hr)			Dose Rate (mr/hr) at Surface of 4 In. Spherical Uranium Shielding
	2 ft. mud	3 ft. water	10 ft. air	
1000	5.9	10.9	1400	1634
500	2.95	5.45	700	817
250	1.48	2.73	350	408
125	0.77	1.36	175	204
62.5	0.37	0.68	87.5	102
31.25	0.19	0.34	43.8	51
15.63	0.09	0.17	21.9	25
7.81	0.05	0.09	10.9	12.8

UNCLASSIFIED
ORNL-LR-DWG. 76357

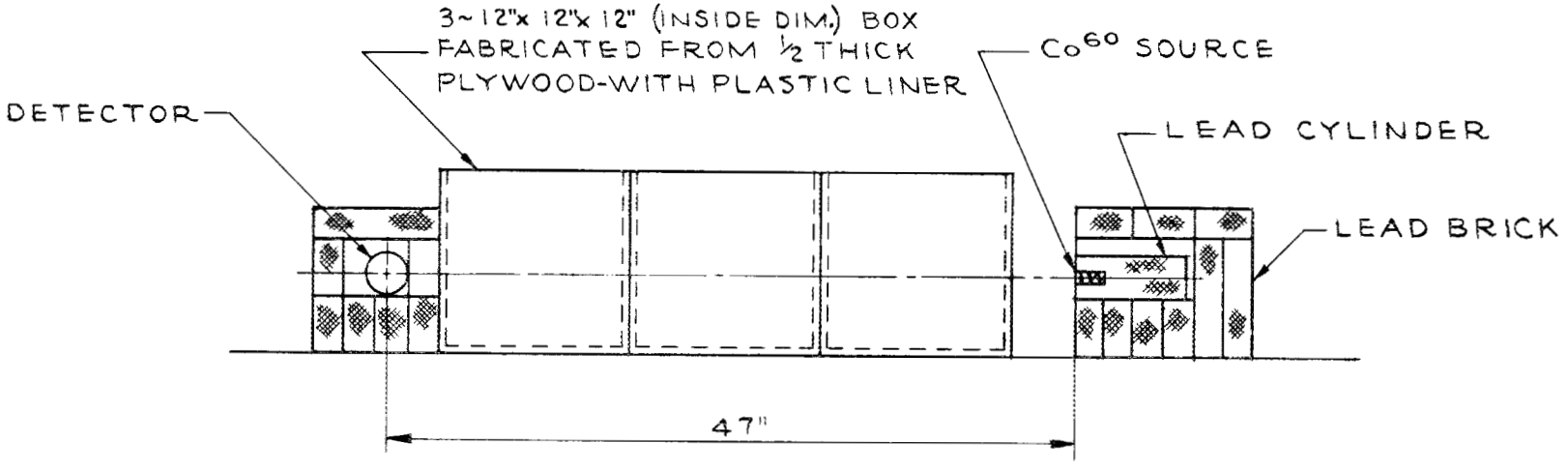

Fig. 2.3.1. Source-Testing Equipment.

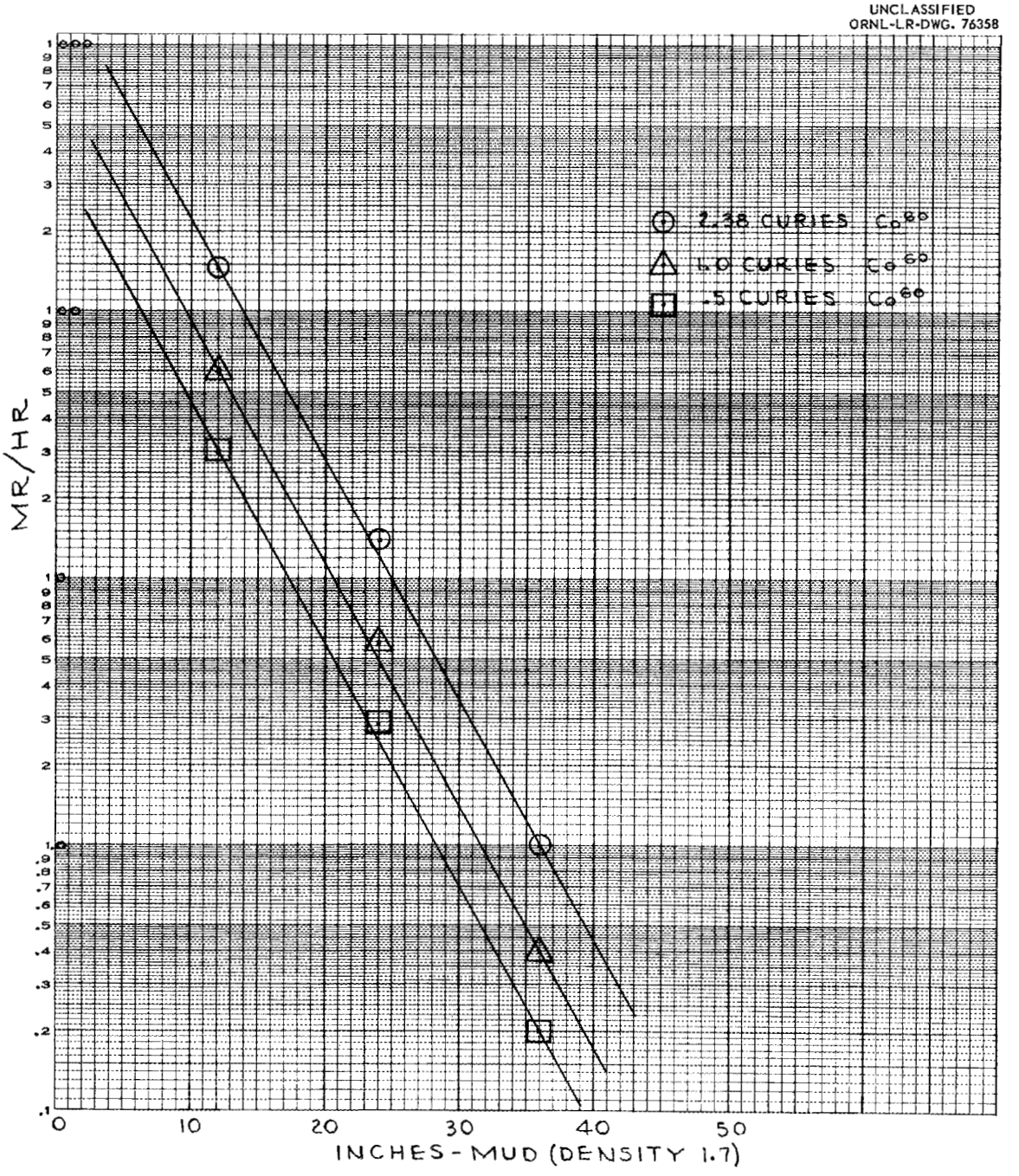

Fig. 2.3.2. Co^{60} Radiation Readings in Mud (Constant Source to Probe Distance, 47 in.).

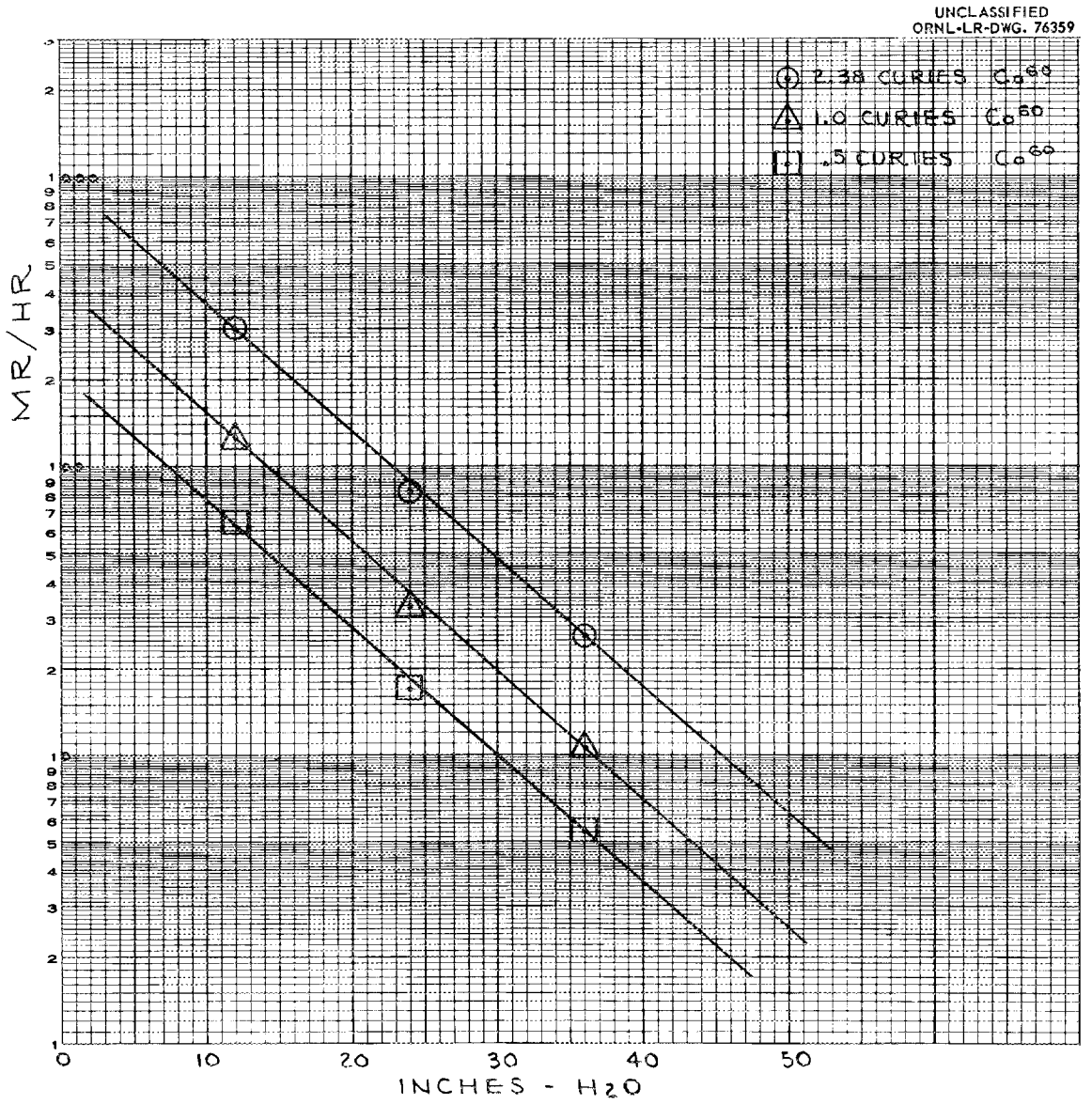

Fig. 2.3.3. Co^{60} Radiation Readings in H_2O (Constant Source to Probe Distance, 47 in.).

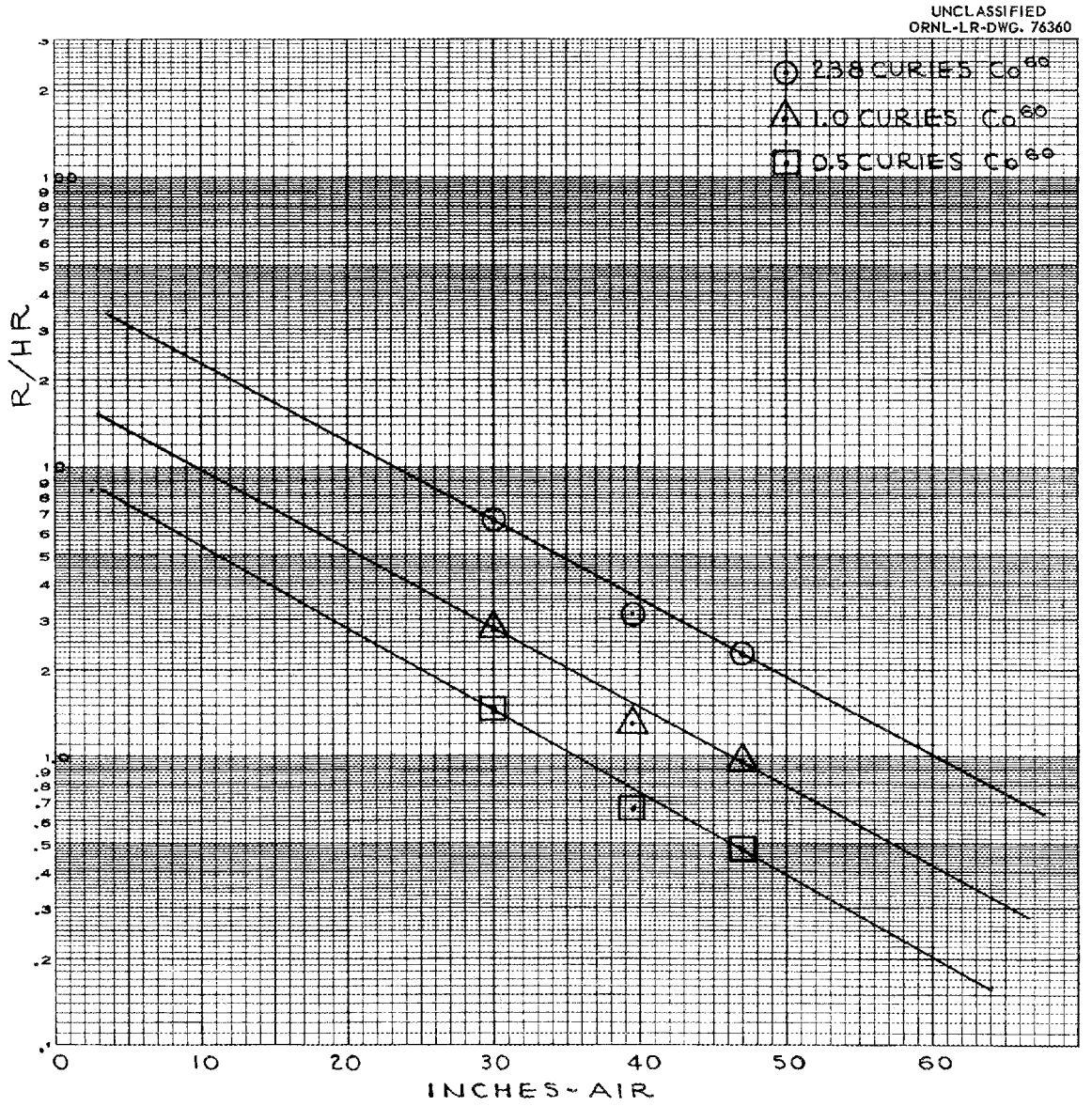

Fig. 2.3.4. Co^{60} Radiation Readings in Air.

Other Progress Reports Issued by
Isotopes Development Center Are:

Curium Program	(Monthly)
Safety Testing Program	(Bi-Monthly, odd)
Radioactive Sources	(Bi-Monthly, even)
Fission Products	(Bi-Monthly, even)
Cyclotron and Reactor-Produced Isotopes	(Bi-Monthly, odd)
Target Development	(Quarterly)
Isotopic Separations	(Quarterly)

DISTRIBUTION

1. P. S. Baker
2. E. E. Beauchamp
3. G. E. Boyd
4. J. C. Bresee
5. Sylvia L. Brooks
6. K. B. Brown
7. T. A. Butler
8. F. N. Case
9. J. W. Cleland
10. J. A. Cox
11. D. J. Crouse
12. F. L. Culler
13. J. H. Gillette
14. H. R. Gwinn
15. W. D. Harman
16. C. P. Keim
17. E. H. Kobisk
18. C. E. Lamb
19. E. Lamb
20. L. Landau
21-22. L. O. Love
23. M. Murray
24. J. J. Pinajian
25. M. E. Ramsey
26. R. A. Robinson
27. A. F. Rupp
28. H. E. Seagren
29. M. J. Skinner
30. K. A. Spainhour
31. H. F. Stringfield
32. J. A. Swartout
33. A. M. Weinberg
34. Laboratory Records - RC
35-36. Central Research Library
37-39. Laboratory Records
40. Document Reference Section

EXTERNAL DISTRIBUTION

41. R. B. Martin, Research and Development Div., AEC-ORO, Oak Ridge, Tennessee.
42-43. H. M. Roth, Research and Development Div., AEC-ORO, Oak Ridge, Tennessee.
44. P. C. Aebersold, Div. of Isotopes Development, AEC, Washington, D.C.
45. A. Berman, Div. of Isotopes Development, AEC, Washington, D. C.
46. H. D. Bruner, Div. of Biology and Medicine, AEC, Washington, D. C.
47. T. R. Jones, Div. of Research, AEC, Washington, D. C.
48. G. A. Kolstad, Div. of Research, AEC, Washington, D. C.
49. J. E. Machurek, Div. of Isotopes Development, AEC, Washington, D.C.
50. F. K. Pittman, Div. of Reactor Development, AEC, Washington, D.C.
51. G. M. Rotariu, Div. of Isotopes Development, AEC, Washington, D.C.
52. L. P. Bupp, General Electric Co., HAPO, Richland, Washington
53. B. F. Judson, General Electric Co., HAPO, Richland, Washington
54. J. T. Cristy, AEC-HOO, Richland, Washington
55. Isaac A. Hobbs, AEC-SROO, Aiken, S. C.
56. V. R. Thayer, Atomic Energy Division, E. I. DuPont, Wilmington, Del.
57. J. William Morris, SRL, E. I. DuPont, Aiken, S. C.
58. L. G. Stang, Hot Lab. Div., Brookhaven National Lab., Upton, L.I., N. Y.
59. J. W. Irvine, 6-426, MIT, Cambridge 39, Mass.
60. R. N. Goslin, Oglethorpe University, Atlanta, Georgia
61-75. DTIE, AEC