OAK RIDGE NATIONAL LABORATORY

operated by

UNION CARBIDE CORPORATION

for the

U.S. ATOMIC ENERGY COMMISSION

ORNL-TM-214

4

ORNL MASTER COPY

VOLUME II

EGCR EXPERIMENTAL LOOPS DESIGN CRITERIA

Staff

Oak Ridge National Laboratory

NOTICE

This document contains information of a preliminary nature and was prepared primarily for internal use at the Oak Ridge National Laboratory. It is subject to revision or correction and therefore does not represent a final report. The information is not to be abstracted, reprinted or otherwise given public dissemination without the approval of the ORNL patent branch, Legal and Information Control Department.

LEGAL NOTICE

This report was prepared as an account of Government sponsored work. Neither the United States, nor the Commission, nor any person acting on behalf of the Commission:

A. Makes any warranty or representation, expressed or implied, with respect to the accuracy, completeness, or usefulness of the information contained in this report, or that the use of any information, apparatus, method, or process disclosed in this report may not infringe privately owned rights; or

B. Assumes any liabilities with respect to the use of, or for damages resulting from the use of any information, apparatus, method, or process disclosed in this report.

As used in the above, "person acting on behalf of the Commission" includes any employee or contractor of the Commission, or employee of such contractor, to the extent that such employee or contractor of the Commission, or employee of such contractor prepares, disseminates, or provides access to, any information pursuant to his employment or contract with the Commission, or his employment with such contractor.

ORNL TM 214

Contract No. W-7405-eng-26

VOLUME II

EGCR EXPERIMENTAL LOOPS

DESIGN CRITERIA

Staff

Oak Ridge National Laboratory

Date Issued

JUL 25 1962

OAK RIDGE NATIONAL LABORATORY
Oak Ridge, Tennessee
operated by
UNION CARBIDE CORPORATION
for the
U. S. ATOMIC ENERGY COMMISSION

CONTENTS

	Code Designation	Page
Criteria for Two – 5 1/2 in. O.D. Through-Tube Assemblies (Loops TS-2R and 3); Two – 9 1/2 in. O.D. Through-Tube Assemblies (Loops TL-1 and 4)	A.1.0 A.2.0 AA.2.0	1
Experimenters' Interior Nozzle Cooling System Criteria	A.7.0	9
Criteria for Mainstream Pressure Relief Devices	B.4.2	13
Criteria for EGCR In-Pile Loop Sampling System	B.10.0	19
Criteria for Cell Penetrations	B.17.0	29
CO_2 Supply System Criteria	C.5.0.1	31
Dummy Stringer Criteria	D.2.2	39
Experimental Stringer Criteria	D.2.3	43
Criteria for Experiment Insertion	D.4.1	53
Fuel Carrier, Cradle, and Dolly Criteria	D.2.5 D.2.6 D.2.7	59
Criteria for the Experiment Removal Cooling System	D.4.0	63
Criteria for EGCR Loop Safety System	H.4.0	93
Experimental Loop Containment Criteria	H.20	99

	A.1.0, A.2.0
Code Designation	AA.2.0
Date of Issue	Dec. 13, 1960
Revision No.	1
Revision Date	June 14, 1961

EGCR EXPERIMENTAL LOOPS
CRITERIA

Subject: CRITERIA FOR TWO - 5 1/2 in. O.D. THROUGH-TUBE ASSEMBLIES (LOOPS TS-2 and 3); TWO - 9 1/2 in. O.D. THROUGH-TUBE ASSEMBLIES (LOOPS TL-1 and 4) R

General Criteria and Description

The following criteria cover the four through-tube assemblies as listed under the EGCR Project Code:

A.1.0 - 5 1/2 in. o.d. He and CO_2 (2 loops)
A.2.0 - 9 1/2 in. o.d. Unspecified Fluid (1 loop)
AA.2.0 - 9 1/2 in. o.d. Unspecified Fluid (1 loop)

Each through-tube assembly as listed under the EGCR Loop Project Code consists of three subassemblies: 1) the through-tube, 2) the top nozzle tee section, and 3) the bottom nozzle tee section. The top and bottom nozzle tee sections shall be welded to the reactor vessel nozzle extension and will become a permanent part of the reactor vessel.

The through-tube is designed as a replaceable item. Final attachment of the tube-to-nozzle tee sections is performed by remote welding the tube to top and bottom tee. For tube replacement, the tube-to-nozzle tee weld is removed by remote machining away the weld.

The primary containment is defined as the components of the through-tube assembly that contain the loop fluid.

The secondary containment is defined as the components of the through-tube assembly that contain the loop fluid upon failure of a primary loop component. The secondary contaiment of the bottom nozzle contains reactor fluid during normal operation; the secondary containment of the top nozzle contains air during normal operation. The secondary containment shall be designed to contain the loop fluid during transient conditions resulting from failure of a primary loop component.

The "Navy Code" (Tentative Structural Design Basis for Reactor Pressure Vessels and Directly Associated Components PB 151987, United States Department of Commerce) and the ASME Unfired Pressure Vessel Code Section VIII shall be

used as the design basis of the primary and secondary containment. The methods outlined in the "Navy Code" shall be used as a guide in performing a stress analysis of the components. In no case shall either code take precedent over a detailed heat transfer and stress analysis to determine maximum integrity of the assembly.

All welding performed on the through-tube assembly shall be in accordance with the following specifications:

Material	Specification
347H SS to 347H SS	MET-RWS-1
347H SS to Carbon Steel (A-106, A-212, etc.)	MET-RWS-4

or sellers' specifications approved by the Company (ORNL Reactor Projects Division).

Liquid penetrant inspection of all components shall be in accordance with MET-RI-1.

The primary and secondary containment is a weldment of detail parts made from pipe, rolled and welded plate, tubing, welding fittings and forgings. All primary and secondary containment detail parts made from 347H stainless steel shall be in accordance with the material specifications as follows:

Detail Parts	Specification
Seamless Pipe	MET-RM-A376-Mod. 2 TP347
Seamless Tubing	MET-RM-A213-Mod. 2 TP347
Welded Pipe	MET-RM-A358-Mod. 2 TP347
Plate (rolled & Welded)	MET-RM-A340-Mod. 2 TP347
Forgings	MET-RM-A182-Mod. 2 TP347
Welding Fittings (caps, elbows, pipe tees, reducers)	MET-RM-A403-Mod. 2 WP-TP347

Inconel Overlay R

All primary containment parts for loop TL-1, Code A.2.0, that are subjected to temperature gradients that will cause steam to condense on the surface shall be overlayed with Inconel. This overlay of Inconel metal shall be in accordance with Section VIII, ASME Boiler and Pressure Vessel Code, Part UCL, using BP-87 or BP-85 filler metal to a finish machined depth of 1/16-in. The part shall be penetrant inspected in accordance with MET RI-1 and 100% radiographed in accordance with Section VIII, ASME Boiler and Pressure Vessel Code, Part UW-51 and ASTM E-142-59T. The porosity size allowable will be limited to size medium as described in Section VIII Appendix A.

All secondary containment detail parts made from carbon steel shall be in accordance with the material specifications as follows:

Detail Parts	Specification
Seamless Pipe & Tubing	MET-RM-A106 Mod. 1 Grade B Carbon Steel
Plate	ASTM-A212 Grade B Carbon Steel
Forgings	ASTM-A105 II Carbon Steel
Pipe Welding Fittings (tee, elbow, reducers, caps)	ASTM-A234 WPB Carbon Steel

A.1.0, A.2.0, AA.2.0 Through-Tube Core Cooling Criteria R
Loops TS-2, TS-3

The through-tube core cooling for the 5 1/2-in. tube is provided to remove the gamma heat deposition in the tube and to limit the tube temperature to a maximum of 1075°F. A design flow of 450 lb/hr has been selected on the basis of an unattemperated 1.5 Mw element.[1] It appears that this will give the maximum tube temperature; however, each experimenter must furnish an axial temperature profile of the tube for each design of a test fuel element configuration.

The flow is orificed by an attached scalloped ring to the outside of the tube and installed with the tube. This orifice fits in a sleeve located in the lower graphite support structure.

Loops TL-1, TL-4

The requirements of the core coolant for these tubes have not been established; however, the tube is designed to receive an orifice similar to the 5 1/2-in. o.d. tubes. Once this flow is established and before the tube is installed, only the orifice hole sizes are required to complete the design.

A.1.0 - 5 1/2-in. o.d. Through-Tube Assemblies for Loops TS-2, and 3

The two 5 1/2-in. o.d. through-tube assemblies are spaced near the center of the reactor core at grid points (-3, -3) and (-3, + 3) and shall be designed to contain helium or CO_2.

The hole through the graphite in the reactor core for this through-tube is 6 1/4-in. diameter.

The primary containment detail parts shall be fabricated from 347H stainless steel.

---

[1] L. W. Noggle, "Steady State Radial and Axial Temperature Profile of an EGCR 5 1/2-in. O.D. Through-Tube During 1500 KW Operation", CF 60-11-55.

A.2.0 - 9 1/2-in. o.d. Through-Tube Assemblies for Loop TL-1 R

The 9 1/2-in. o.d. through-tube assembly for Loop TL-1 shall be designed to contain any other fluid compatible with 347H stainless steel. These assemblies are located at reactor grid position (+12, -12).

AA.2.0 - 9 1/2-in. o.d. Through-Tube Assembly for Loop TL-4 R

The fluid for this through-tube assembly shall be designed to contain any fluid compatible with 347H stainless steel. This assembly shall be designed to permit a double tube arrangement through the reactor core with the loop fluid contained in the inner tube and a buffer coolant fluid contained in the outer fluid. This assembly is located at grid position (+12, +12).

A.1.1.0 - 5 1/2-in. o.d. Through-Tube

The through-tube consists of a tube and top and bottom end adapter. The end adapters form the transition between the nozzle tee section and the tube.

The maximum normal operating internal pressure and temperature of the loop fluid for this component is 1000 psia and 1075°F. The normal operating external pressure is 300 psi reactor fluid.

The design pressure and temperature for the primary containment shall be 1100 psia and 1075°F with a ΔP of 800 psi across the tube (1100 psia internal and 300 psia external).

The secondary containment for this component is the reactor vessel. The design pressure and temperature for this containment is 350 psia and 650°F.

The tube end adapters shall be 347H stainless steel forging to specifications MET-RM-A182 Mod. 2 and machined to a 63 finish.

The tube shall be a nominal 5 1/2-in. o.d. with a nominal .2185 wall thickness with tolerance ±10%. The inside diameter shall be held to $5.063 \pm {}^{.030}_{0}$ including ovality. The tube straightness shall be checked by using a special plug gage $5.000 \pm {}^{.015}_{0}$ diameter and 10 ft long. If the plug gage can be inserted for 54 ft of the length of the tube from the top with the tube adapter welded in place, then the tube is dimensionally acceptable. The weld shrinkage occurring at the adapter-to-tube weld joint may be corrected by installing a tube roller inside the tube at the weld and cold forming to size.

The tube inside and outside diameter shall have a 63 microinch finish or better. The tube shall be seamless type 347H stainless steel tubing fabricated to specification MET-RM-A213-Mod. 2.

The full length through-tube including the weld adapters shall receive a liquid penetrant inspection as outlined in specification MET-RI-1.

The tube shall have an orifice and guide located in the bottom graphite support structure. The orifice shall be removed with the tube.

The tube shall be insulated from the inside with reflective insulation. The insulation from the core to the bottom inlet nozzle shall be installed with the tube. All insulation used from the bottom of the core to the top nozzle shall be inserted with the test specimen.

With no experiment in the loop, the through-tube shall be pressurized with He or CO_2 to 300 psia when the reactor is operating.

AA.2.1.0 - 9 1/2-in. o.d. Through-Tube

The design of this component has been deferred; however, the following criteria have been established to permit completion of design of the nozzle tee section.

The design shall consist of an inner and outer tube arrangement, but the outer tube shall not exceed 9 1/2-in. o.d.

A double tube arrangement shall be designed to meet the following criteria:

The maximum normal operating pressure and temperature of the loop fluid, inside the inner tube, is 315 psia and 1050°F.

The design pressure and temperature for the inner tube shall be 350 psia internal or external pressure and 1075°F.

The design pressure and temperature for the outer tube shall be 350 psia internal or external pressure and 1075°F.

A single tube through the core may be designed for a higher internal pressure.

AA.2.1.0 - 9 1/2-in. o.d. Through-Tube

The design of this component has been deferred; however, a maximum tube diameter of 9 1/2-in. has been established to permit completion of design of the nozzle tee sections.

A.1.2.0
A.2.2.0
AA.2.2.0 - Top Nozzle Tee Section

The top nozzle tee section shall have a breech closure at the top for the purpose of opening the loop to insert or remove a test specimen from the

through-tube. This breech closure shall be designed to connect to the primary containment of the loop. The breech closure shall be designed to permit removal of the test specimen stringer assembly. The test specimen stringer assembly consists of breech closure, shield plug, through-tube insulation above the core and test specimen, test specimen instrumentation and support.

The top nozzle tee shall have a connection below the tube weld to permit reactor nozzle coolant to pass down the outside of the through-tube and inside the nozzle to discharge into the top plenum of the reactor.

The maximum normal operating pressure and temperature of the loop fluid for this component is 1000 psia and 1050°F.

The design pressure and temperature for the primary containment shall be 1100 psia and 1075°F.

The design pressure and temperature for the secondary containment shall be 1050°F at 750 psi. This value is for the purpose of establishing the vessel thickness requirements in this section and consequently the membrane stress. The temperature is not to be interpreted as that of the complete section.

Since the tubes will not be installed on initial operation for A.2.2.0 and AA.2.2.0, a dummy plug shall be installed in its place. This dummy shall be designed for an external pressure of 300 psia at 650°F. for the bottom nozzle and 300 psia and 1075°F for the top nozzle.

The primary containment shall be hydrostatic tested at 1.5 times the design pressure. The secondary containment shall be tested at 1100 psia.

A.1.3.0
A.2.3.0
<u>AA.2.3.0 - Bottom Nozzle Tee Section</u>

The maximum normal operating pressure and temperature of the loop fluid for this component is 1000 psia and 950°F.

The design pressure and temperature for the primary containment shall be 1100 psia and 975°F.

The design pressure and temperature for the secondary containment shall be 750 psia and 650°F unless a transient analysis of the failure of the primary containment requires an increase in the design pressure and temperature.

The bottom nozzle section shall have a connection above the through-tube to tee weld to permit reactor nozzle coolant to pass up the outside of the tube and inside the nozzle thermal sleeve to discharge into the bottom plenum of the reactor.

The through-tube shall be guided at the bottom tee. A guide shall be placed above and below the tee inlet to the through-tube. This bearing surface shall be a suitable bearing material to prevent galling. (A wear test shall be performed on Linde Flame Plate LW-1N30 to Linde Flame Plate LW-1N30 and Stellite No. 12 to Stellite No. 12 and Stellite No. 6 to Stellite No. 6).

To Provide for differential thermal expansion between the through-tube and the reactor, the tube shall be fixed at the top nozzle section and permitted to grow vertically inside the double containment of the bottom nozzle tee section. The operating requirements for thermal growth is 4 3/4-in. The design for thermal growth shall be 5 3/4-in.

The primary containment shall be hydrostatic tested at 1.5 times the design pressure. The secondary containment shall be tested at 1100 psia.

Code Designation A.7.0
Date of Issue April 10, 1961

EGCR EXPERIMENTAL LOOPS
CRITERIA

Subject: EXPERIMENTERS' INTERIOR NOZZLE COOLING SYSTEM CRITERIA

Function

The function of the nozzle cooling system that connects to the through tube assembly for loops TS-2, TS-3, TL-1 and TL-4 is to control the temperature of the carbon steel secondary containment of the top and bottom nozzle tee section and the reactor vessel nozzle extension.

By insulating the tube on the inner diameter and flowing the nozzle coolant between the tube outer diameter and the nozzle inner diameter, the tube temperature is reduced. The reduction in the tube temperature reduces the differential thermal expansion between the through tube and the reactor pressure vessel for high temperature loop operation. The reduction in expansion permits the use of an expansion leg of pipe rather than bellows to provide for the differential expansion.

The concrete that surrounds the nozzle tee and the reactor vessel extension must be maintained at 120°F. The heat flow path is from the through tube to secondary containment to the concrete that surrounds the secondary containment. With the nozzle coolant at low temperature (125°F) and the loop gas at 950 to 1050°F, the nozzle coolant is the heat sink for heat loss from the through tube; therefore, the concrete chase coolant flow requirements are reduced.

System Description

The through tube nozzle cooling system is part of the system provided to cool the charge machine, service machine, reactor nozzle and reactor vessel.

Helium is extracted from the inlet duct of the reactor coolant system which is normally operating at 508°F. The fluid passes through one of the two compressors of the system where the pressure is raised to overcome system resistance. The fluid then flows through a helium to service water cooler where the helium temperature is reduced to 125°F. The helium then flows to a header distribution system where the fluid is distributed according to the requirements of each component (charge machine, service machine, reactor vessel annulus, and through tube nozzle).

The interior nozzle coolant for the top tee enters at a position below the outlet loop tee and flows down the nozzle between the tube and the carbon steel secondary containment, discharging into the upper plenum of the reactor.

The interior nozzle coolant for the bottom nozzle enters at a position above the inlet loop tee and flows up the nozzle between the tube and the thermal sleeve, discharging into the bottom plenum of the reactor.

The system has two compressors and two heat exchangers, one operating and one standby. Each compressor or heat exchanger is designed to handle the maximum load.

The equipment required in each 1 1/2 in. sch. 40 line from the helium header to each nozzle tee section is shown on Dwg. D-10117. This drawing also shows the designated location and line number to each loop.

Design

The system components downstream of the cooler (piping, pipe headers, valves, instrumentation subjected to system fluid) shall be designed to meet the conditions shown in Table I.

Loop TL-4 will have additional cooling, other than the nozzle coolant, to control the differential thermal growth between the primary containment tube and the reactor for a double tube design.

The check valve, 1 1/2 V-K-50, and globe valve, 1 1/2 V-K-18, shall be located as close as possible to the tee section but must be accessible during reactor operation to permit balancing out the system during shake-down of the reactor.

Due to the different inlet operating temperatures for the loops (650 to 950°F) the bottom nozzle coolant requirement must be established for the maximum inlet loop temperature. The heat transfer analysis as related to the nozzle coolant has been completed for loops TS-2, TS-3 and TL-1; however, only the section for loops TS-2 and TS-3 have been published[1]. TL-4 loop requirements are the same as loop TL-1 for loop operation using a single tube.

Operation of the loop must be coordinated with the operation of the reactor. That is, the temperature difference between the average axial temperature of the reactor vessel and the average axial temperature of the through tube must not exceed 600°F.

The system shall have instrumentation and alarms to indicate a decrease in flow of 10% to permit the operator to take corrective action. The system shall have instrumentation and alarms to indicate a decrease in flow to 75% and instrumentation that will cause cause the reactor to scram when the flow decreases to 75% of the normal flow for the interior nozzle coolant.

---

[1] W. S. Chmielewski, R. E. Helms, E. R. Schmidt, "Through Tube Assembly Title II Design Analysis", Fig. A.1.1.-1 through A.1.1.-17.

Three thermocouples for each nozzle shall be installed at each stainless steel to carbon steel weld below the interior nozzle coolant inlet for the top tee section and above the nozzle coolant inlet for the bottom tee section.

Three thermocouples for each nozzle shall be installed at each field weld of the top nozzle tee section which is above the annulus coolant inlet. This is a total of thirty-six thermocouples.

All thermocouples are to be installed on the outer secondary containment of the tee section and are intended for operational shakedown of the system. That is, these thermocouples will not be replaced once they fail.

The temporary shield plug shall be designed to extend below the annulus coolant inlet when the through tube is removed.

Table I

Loop No.	Loop Grid Location	K-E Line[1] No.	K-E Header No.	Design Conditions for Pipes, Valves and Other Components of the System: Design Pressure	Design Temperature	Flow Design Conditions: Flow	Temperature
			5 1/2 in. o.d. Through Tube Top Nozzle Interior Cooling				
TS-2	-3, -3	NH-234-1 1/2-8	NH-234-2"-8	350 psi	550°F	100 lb/hr	125°F
TS-3	-3, +3	NH-222-1 1/2-8	NH-220-2"-8	350 psi	550°F	100 lb/hr	125°F
			5 1/2 in. o.d. Through Tube Bottom Nozzle Interior Cooling				
TS-2	-3, -3	NH-3205-1 1/2-8	NH-1334-2"-8	350 psi	550°F	100 lb/hr	125°F
TS-3	-3, +3	NH-3204 1 1/2-8	NH-1334-2"-8	350 psi	550°F	100 lb/hr	125°F
			9 1/2 in. o.d. Through Tube Top Nozzle Interior Cooling				
TL-4	+12, +12	NH-206-1 1/2-8	NH-200-2"-8	350 psi	550°F	175 lb/hr	125°F
TL-1	+12, -12	NH-246-1 1/2-8	NH-240-2"-8	350 psi	550°F	175 lb/hr	125°F
			9 1/2 in. o.d. Through Tube Bottom Nozzle Interior Cooling				
TL-4	+12, +12	NH-3200-1 1/2-8	NH-3202-2"-8	350 psi	550°F	175 lb/hr	125°F
TL-1	+12, -12	NH-3201 1 1/2-8	NH-1334-2"-8	350 psi	550°F	175 lb/hr	125°F

[1] Kaiser Engineering Drawings P-274, P-127, P-272.

Code Designation B.4.2
Date of Issue Apr. 24,1961

EGCR EXPERIMENTAL LOOPS
CRITERIA

Subject: CRITERIA FOR MAINSTREAM PRESSURE RELIEF DEVICES

1.0 Purpose

Pressure relief devices shall be installed on the mainstream loop piping to provide overpressure protection. These pressure relief devices shall be designed such that the loop conforms to the ASME Boiler and Pressure Vessel Code, Section VIII and applicable nuclear code cases.

2.0 Description and Operation

Pressure relief devices located on the mainstream loop piping shall be either (1) relief valves of the direct spring-loaded type, or (2) pilot-valve or other indirect operated safety valves. Indirect operated safety valves may be used only if the design is such that the main unloading valves open automatically at not over the set pressure and discharge at full rated capacity if some essential part of the pilot or auxiliary device fails.

All mainstream loop pressure relief devices discharge to the gas storage tanks. This permits containment of all gases which discharge or leak across the valve seats. The gas storage tanks are pressure relieved at 750 psia.

2.1 Location of Relief Devices

The location of the loop pressure relief devices is shown in Fig. I. Four relief devices are required. Relief valve PSV-179 is located upstream of cell isolation valve HV-15 and provides overpressure protection to the through tube, the cooler and the out-of-cell mainstream piping. Valve V-1 is located on the pipe which bypasses the mainstream compressors and provides the compressors with overpressure protection. Valve V-2 protects the heater and valve V-3 protects the bypass compressor. All relief valves will be located as far as possible from the mainstream piping to keep the valves at the lowest possible temperature. The piping which connects the relief valves with the loop shall be uninsulated, 1 1/2 in. sch. 40 347H stainless steel. The piping shall contain a U-bend between the mainstream piping and the relief valve to prevent thermal convection of gas in the piping and to allow pipe expansion.

2.2 Set Pressure

The relief devices shall be set in accordance with Section VIII of the ASME Boiler and Pressure Vessel Code. As the relieving capacity is supplied by more than one relief valve, one valve will be set to open at the design pressure* of the loop and all other valves will be set to open at 105% of design pressure.

The design pressure of the mainstream piping and equipment is shown in Table I. As can be seen, the lowest design pressure is 1000 psia; the discharge of the Bristol Siddeley compressors. Therefore, one relief valve must be set to open at 985 psig and all other relief valves set to open at 1035 psig. Should the compressor design pressure be increased to 1100 psia, all of the relief valve settings could be increased by 100 psi.

2.3 Relief Capacity

Paragraph UG-125, Section VIII of the ASME Boiler and Pressure Vessel Code requires all unfired pressure vessels to be protected by pressure relieving devices that prevent the pressure from rising more than 10% above the maximum allowable working pressure except when the excess pressure is caused by exposure to fire or other unexpected source of heat. Design limitations of the mainstream compressors require the maximum depressurization transient be limited to not more than 7 psi/sec. Therefore, the capacity requirements of the ASME code are met by using a number of relief devices, which are sized so that failure of any one device does not induce a pressure transient of more than -7psi/sec.

The required relieving capacities of the relief devices are shown in Table II. The flows shown are actual flow rates required, not the ASME rated capacities.** These capacities are based on the maximum depressurization rate of 7 psi/sec. If subsequent compressor tests reveal different allowable depressurization rates, the capacities must be correspondingly adjusted.

---

*The ASME Code requires relief devices to be set according to the maximum allowable working pressure. However, for vessels containing gas only, the vessel design pressure and maximum allowable working pressure are identical.

**Section VIII, Para. UG-131 (d) (2) of the ASME Boiler and Pressure Vessel Code requires relief valve manufacturers to rate safety and relief devices at 90% of the actual measured capacity.

Table I

Design Pressures of Loop Components

	Design Pressure psia
Through Tube	1100 (300 + 800 ΔP)
All Mainstream Loop Piping	1100
Heater	1100
Filter	1100
Cooler	1100
Bypass Compressor	1100
Bristol Siddeley Compressors Discharge	1000

Table II

Relief Valve Capacities

Valve	PSV-179	V-1	V-2	V-3
Set Pressure, psig	1035	985	1035	1035
Relief Capacity, scfm He				
Loop TS-2	1200	1200	800	1200
Loop TS-3	1200	1200	800	1200
Relief Capacity, scfm CO_2				
Loop TS-2	300	300	200	300
Loop TS-3	300	300	200	300

2.4 Back Pressure

As the pressure relief devices discharge into the gas storage tank, the back pressure on the relief valves may vary. Therefore, the relief valves must be back pressure compensated. During normal operation of the loop at power the back pressure will vary over a pressure range of 0-60 psia. During shutdown conditions, the back pressure may be as high as 750 psia, the relieving pressure of the gas storage tanks.

2.5 Leakage

Two kinds of leakage must be considered in the pressure relief devices - leakage across the valve seat and leakage through the valve assembly to the experimenters' cell atmosphere.

2.5.1 Across-the-Seat Leakage

It is anticipated that the pressure relief valves will not seat adequately to prevent leakage across the valve seat. Therefore, one of the functions of the transfer pump is to make up the gas which leaks from the mainstream loop to the gas storage tanks through the relief valves. This leakage must be limited so that the transfer pump is not overworked. It is also desirable to limit the leakage so that valve seats do not come into contact with hot gas. Thus, across-the-seat leakage for each relief valve must be limited to 150 std. cc/min helium at operating conditions. This leakage requires transfer pump operation about two hours per day.

2.5.2 Leakage to the Atmosphere

So as not to unduly contaminate the experimenters' cell atmosphere, leakage from the relief valve interior to cell atmosphere must be maintained at not more than 1×10^{-6} std. cc/sec helium at operating conditions.

2.6 Design Pressure and Temperatures

In order to be consistent with the rest of the primary loop piping, the pressure relief valves and their associated piping must be designed for 1100 psia and 975°F.

2.7 ASME Code Stamp

All of the pressure relief devices must be marked in accordance with the latest edition of the ASME Boiler and Pressure Vessel Code, Section VIII, Paragraph UG-129.

2.8 Loop Operating Pressure

The operating pressure of the loops will be limited to a pressure at which the across-the-seat leakage meets the requirements of section 2.5.1.

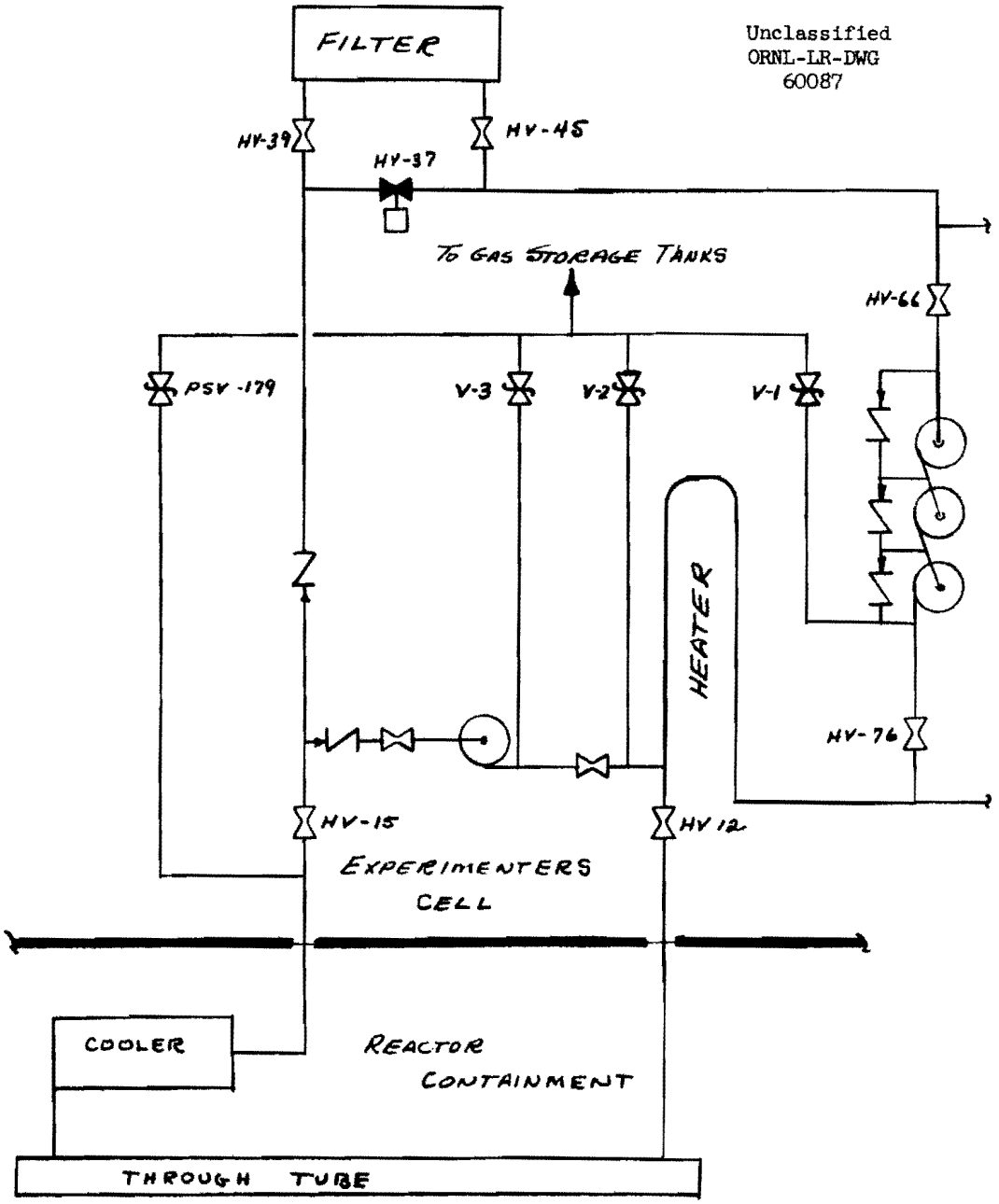

Fig. 1. Loop Pressure Relief.

Code Designation B.10.0
Date of Issue May 8, 1961

EGCR EXPERIMENTAL LOOPS
CRITERIA

Subject: CRITERIA FOR EGCR IN-PILE LOOP SAMPLING SYSTEM*

A. Scope and Objectives

The design of the gas sampler system for the EGCR loops must be closely correlated with the specified loop objectives. Four experimental loops are to be installed in the EGCR to test various types of fuel element designs for advanced gas-cooled reactor concepts, under controlled reactor operating conditions. Helium, CO_2, H_2 and superheated steam are contemplated as the loop coolant gases. These criteria are concerned only with the helium and CO_2 loops. Additional criteria will be issued for the hydrogen and steam loops. The helium and CO_2 will be circulated at pressures and temperatures ranging from 500 to 1000 psia at fuel element inlet temperatures from 600°F to 950°F with a fixed upper limit of the mixed mean outlet gas temperature established at 1050°F.

The objectives and program for the EGCR loop tests have not yet been specified in sufficient detail to establish a firm basis for the sampling station criteria. However, a rather broad basis for design of the sample station can be formulated which should cover the objectives and requirements anticipated for the EGCR loops. These objectives are:

1. Obtain information on the release of fission products from fuel materials.

2. Determine deposition of activity in system, i.e., activity in gas, deposition in system, and that removed by filters.

3. Development of techniques for activity level control, including effectiveness of bypass cleanup system, and main stream filters.

4. Obtain information on the mechanical, radiation, and thermal properties of unclad fuel elements.

5. Obtain information on the decontamination of contaminated gas system.

---

*Most of these criteria and discussions are taken directly from the Preliminary Criteria prepared by C. L. Segaser (July 22, 1960).

6. Obtain information on the presence or rate of buildup of other gas contaminants that might result from fuel element degassing, corrosion, etc.

In order to accomplish these objectives, the loops shall be provided with gas monitoring and sampling systems that are capable of continuously withdrawing a small gas stream for "on-line" sampling and shall also be capable of removing small representative samples of loop gas for subsequent analyses. The continuous sample stream will be monitored by a wire precipitator or other suitable in-line fission product detectors. In addition to these gas monitoring systems, the loop will be provided with gamma monitors at several points along the loop piping, among which are the hot pipe from the reactor, total-stream filter, the evaporative cooler, bypass filter, and blowers.

B. Criteria

1. A sample station will be designed for each of the EGCR loops. The station shall have a facility for the extraction of a discrete quantity of gas from each of several designated points in the loop for transport to and analysis at another site. A connection shall be provided at each sampling point for attachment of a type of in-line gas analyzer which may be either or all of the following:

   a. Gas chromatograph
   b. Mass spectrometer
   c. Charged-wire fission product detector

   If a gas chromatograph or mass spectrometer type of instrument is used as a continuous analyzer, the gas in the loop must be reduced in both temperature and pressure since existing equipment is not built to withstand the specified temperature and pressure. A gas chromatograph requires a continuous flow of carrier gas which would have to be considered in any loop containment. Water vapor in the sample gas causes contamination of columns used in a gas chromatograph. Consequently, a filter is required upstream of the analyzer section to remove water vapor from the sample. Analysis for water requires a separate instrument.

2. The sampler station shall be easily accessible to operating personnel, and shall be located to be accessible by the installed handling equipment.

3. Positions in the loop from which the gas will be sampled shall be the following:

   a. Downstream of the loop-gas cooler
   b. Downstream of the main-line filters

c. At the outlet of the compressors
d. Downstream of the heater
e. Downstream of the bypass gas cleanup system
f. From the gas storage tanks

4. The gas in the loops (He or CO_2) will be at a pressure from 500 to 1000 psia and temperature ranging from 550 to 950°F. The gas may be radioactive. The total loop equilibrium activity has been estimated at 7.52×10^3 curies.*

5. The sample station design shall permit taking from 3 to 6 samples per 24 hrs, from each of the designated loop sample points.

6. The principle of double-containment of the loop must not be violated during extraction of a sample, hence, the sample-station containment may, in effect, serve as an extension of the loop equipment containment.

7. The sample-station containment shall be operated at a pressure less than atmospheric during the sampling process to insure that leakage will be inward.

8. Adequate shielding shall be provided to reduce the gamma radiation to acceptable levels at the surface of the sample-station containment vessel.

9. The sample bomb shall be designed with integral shielding, if necessary, or shall be withdrawn into a shielded container to insure reduction of dose rate to acceptable levels during the process of extracting and transporting a batch sample.

10. Elastomers susceptible to heat and radiation damage are not permissible for use in closures, valves, or couplings in the loop sampler piping system which is in contact with hot loop gas.

11. In order to obtain as representative a sample as possible, the sampling lines and equipment in and to the sampling chamber shall be maintained as near to operating temperature as possible. A decontamination system shall be provided to flush the sampling equipment between sampling procedures, if practical. A vacuum system shall be provided to purge atmospheric contaminants from the system prior to sampling. The system shall be used to dispose of residual radioactive gas in the system prior to withdrawing the sample bomb.

---

*T. H. Row, "Activity in the EGCR Experimental Loops", memo to F. H. Neill, February 8, 1960.

12. Instrumentation will be provided to monitor pressures in the sample station and equipment.

13. Interlocks and protective devices shall be provided in the controls as required to render the operation of the sampler as reliable and as fool-proof as possible.

14. The quantity of gas to be delivered by the sample bomb has been estimated from 25 to 50 cc at standard temperature and pressure.*

C. The Proposed Sampling Station

The proposed gas sampling system for the EGCR experimental loops is shown in Fig. 1. The principle of operation of this system is similar to that utilized in pneumatic "rabbit" tubes which are in common use in research reactors. The system is designed to collect 4 cc samples of loop gas at pressure and temperature at any time during loop operation. Under the most adverse operating conditions, i.e., at lowest operating pressure (500 psia) and maximum temperature (950°F) this 4 cc sample will be equivalent to more than 50 cc at STP. The use of a small sample bomb reduces or eliminates the requirement for shielding of the bomb. Under the most severe operating conditions, the dose rate from a point source of 4 cc of loop gas has been estimated to be approximately 10 mr/hr at a distance of 2 ft.**

Operation of the sample system is relatively simple. First, the pneumatic lines are purged to remove any metal chips or dust that might cause the bomb to stick in transit. After purging, the experimenter loads the sample holder containing the sample bombs into the sample station tube. Precautions are taken by using alignment pins in the tube and/or sample holder so that each sample bomb is exactly positioned opposite the proper pneumatic transfer line.

When it is desired to take a sample, the proper sample bomb is pneumatically transferred by means of the transfer line through a ball valve, V-2, into the sampling chamber mounted directly on the primary loop piping. The sampling chamber is alternately evacuated and purged with clean loop gas while the bomb is permitted to reach thermal equilibrium with the primary

---

*Verbal communication from J. C. White to C. L. Segaser

**Personal communication from T. H. Row, April 27, 1961

loop piping. The entire installation is insulated so the bomb, pipe, valves, and lines should approach the loop gas temperature at that point to reduce the possibility of plating of some of the fission products on cold surfaces. In order to take a sample, V-2 is closed and sampling chamber is evacuated. V-3 is then "closed",* pressurizing the sampling chamber and bomb with loop gas. Once the chamber has attained full loop pressure, V-3 is "opened" and the sampling chamber is purged with air, exhausting it to the off-gas system. A small, high temperature, high pressure, check valve, V-1, is mounted inside each sample bomb to prevent the bomb from depressurizing once it has filled with loop gas. After purging the sampling chamber, the sample bomb is pneumatically transferred to the sample bomb holder where the experimenter can manually withdraw the sample bomb and insert a seal plug in the bomb to contain any leakage past the check valve.

The pneumatic transfer tubes have been estimated to be approximately 3/4-in. in diameter. The system and bombs will be constructed of stainless steel although the bombs will incorporate concentric rings of some soft material to prevent sliding contact between the two stainless steel surfaces. The transfer lines will be designed to utilize long radius bends and the number of vertical lines will be kept at a minimum.

The differential pressure required to transfer the sample bombs is obtained by using the vacuum pump in the loop off-gas system. Thus, the pressure moving the bomb need never exceed atmospheric pressure. This prevents any possibility of overpressurizing the cell as might occur if a positive pressure source were utilized. Actually, clean loop gas at 30 psia is used to transfer the bomb to the sampling chamber, but this supply is automatically terminated when the cell is sealed. The bomb can be transferred using atmospheric air pressure if the cell is sealed, thereby cutting off the gas supply. The gas is used only to reduce the probability of atmospheric contamination of the sample.

As mentioned earlier, the bomb will be sized to take a 4 cc gas sample. The bomb is prepared by purging and filling with clean loop gas to a pressure of 20 psia to seat the check valve and prevent air contamination during transfer and purging. Upon heating to loop temperature, the bomb pressure may increase to 50 psia. This means the sample will be diluted to approximately 5 - 10%. If an absolute loop gas sample is desired, the sample bomb can be evacuated and a rupture disc mounted in series with the check valve to insure the vacuum until the sampling chamber is pressurized to loop pressure.

---

* In referring to the position of all three-way valves, the "open" position as used in these criteria corresponds to the position permitting axial flow through the valve while the "closed" position corresponds to branch flow through the valve.

One problem that must be considered in transferring the sample bomb to the sampling chamber is that the operator must be sure that the bomb is in place at the sampling chamber before closing valve V-2. To accomplish this, a carbon steel plug is attached to one end of the sample bomb. A small coil of high temperature wire is wrapped around the corresponding end of the sample chamber. Correct positioning of the sample bomb is then determined by the change of inductance of the coil when the carbon steel plug enters it.

The one apparent weak point in the sampling system is the check valve used in the sample bomb. This valve is subjected to high temperatures (~1000°F) and high pressures (1100 psia). There is a spring loaded, ball check valve commercially available utilizing a tungsten carbide ball and seat which will take these pressures and temperatures. The unknown factor associated with this valve is the leakage rate. Leakage tests will be made with these valves in the near future to see if they can be used. For sampling gas at 550°F, there are a number of small, reliable check valves commercially available using teflon seals. If the leakage rate of the tungsten carbide check valve proves to be excessive, it is felt that either the seat or ball may be replaced with a soft metal component which will improve the seal although the metallic part would probably have to be replaced each time a sample is taken.

The sample station tube and the pneumatic transfer tubes will be designed for 50 psig internal pressure and a differential external pressure of 27 psi. A pressure relief valve, V-9, will protect the sample station by opening to the cell at a differential pressure of 40 psi. The relief valve is sized to handle the flow into the sampling chamber from all the primary gas valves, V-3. Flow from the primary gas loop through these valves, V-3, will be orificed to prevent rapid depressurization of the loop.

The principle of secondary containment is never violated during operation of the sample station. Normally, primary containment ends at V-3 except when pressurizing the sampling chamber at which time V-2 provides the primary containment. The sample station tube and pneumatic transfer lines serve as secondary containment when V-2 is open and when V-3 is "closed". A number of interlocks will prevent violation of containment. When removing the low pressure cap on the sample station tube, one or more switches will perform the following actions if they have not been done. The vacuum pump will be turned on, valves V-2 will be closed, valves V-3 will be "opened", and valve V-5 will be closed. Interlocks will also prevent "closing" of V-3 unless the pressure in the sample tube is subatmospheric, the position indicator has indicated that the sample bomb is in position in the sampling chamber, and V-2 has been closed. An additional interlock will prevent opening of V-2 as long as V-3 is "closed".

The purpose of valve V-4 is to provide backup to V-3 in the event of a failure of V-3. Consequently, closing V-4 makes it impossible to "blow down" the loop following failure of any V-3. The only valve that must be relatively leaktight aside from V-1, is V-3 since it seals the primary gas system. V-2 and V-3 should be designed for operation at full loop temperature and pressure. V-4 must be designed to withstand full loop pressure but can be a low temperature valve. Valves V-5, V-6, V-7, V-8, and V-9 are low pressure, low temperature valves.

It is proposed to mount the sample station tube in the cell wall such that it opens in the experimenters' utility tunnel. Preferably, it will be mounted in one corner of the cell where a simple shadow shield around one side and the end of the tube will provide satisfactory shielding. Since the radiation level of the sample bombs is quite low, a simple shadow shield between the tube and loop piping should provide sufficient shielding for personnel inside the utility tunnel.

Installation of the sample station in the cell wall rather than the ceiling has a number of advantages. It reduces the number of vertical runs for the pneumatic transfer tubes; it permits easy access to the pneumatic tubes with a flexible tool in the event a sample bomb should stick during transit to or from the bomb holder, and it permits installation of a ventilation hood above each sample station tube, if desired. The ventilation hood would be connected to the ventilation exhaust header of the cell ventilation system. Since this is an induced draft system, it should transfer any leakage of loop gas from the sample bombs directly to the stack.

The only instrumentation shown in Fig. 1 consists of pressure elements at the sample station tube and sampling chamber and the bomb position indicator (designated XE) at the sampling chamber. This should be sufficient instrumentation to insure proper operation of the system.

D. Detailed Sampling Procedure

Assume sample station tube is empty and capped and it is desired to obtain a gas sample from all the sample points in the system.

Valve Positions

Open: V-3*, V-4, V-6*

Closed: V-2, V-5*, V-7*

---

*In referring to the position of all three-way valves, the "open" position as used in these criteria corresponds to the position permitting axial flow through the valve while the "closed" position corresponds to branch flow through the valve.

1. Start vacuum pump and flush system with air to remove any particulate matter that might be present in the pneumatic piping.

   a. "Close" V-6 drawing a vacuum on the sample station.
   b. Open and reclose each V-2, in turn, back flushing each pneumatic line with cell air.
   c. Close all V-2's.

2. Remove low pressure cap, clean, and insert sample bomb holder full of bombs. Replace low pressure cap once bomb holder is in proper position.

3. Purge sample station tube and transfer lines.

   a. With V-6 still "closed" draw a vacuum on the system.
   b. "Open" V-7 and pressurize the system with clean loop gas from the loop gas distribution system by "opening" V-6.
   c. Cycle V-6 until sufficient purging is accomplished. When through purging, "open" V-6 pressurizing station.

4. Transfer sample bombs to the proper sampling chambers.

   a. "Open" V-5 drawing a vacuum on the sampling chambers.
   b. Open and close each V-2, transferring all the sample bombs to the respective sampling chambers, checking that each bomb is in position in the proper sampling chamber before closing the respective V-2.
   c. Purge each sampling chamber of atmospheric contaminants by opening and closing all V-2's. Leave all V-2's open and close V-4.
   d. Permit bomb to reach thermal equilibrium.
   e. Close all V-2's and open V-4, evacuating the sampling chamber. "Close" V-6, evacuating sample station tube.

5. Take gas samples.

   a. "Close" each V-3, pressurizing sampling chamber and bomb with loop gas.
   b. After sampling chamber has reached loop pressure, "open" V-3, evacuating sampling chamber.

6. Purge sampling chambers and transfer bombs to bomb holder.

   a. "Close" V-7 and "Open" V-6, admitting air to sample station tube.
   b. Open each V-2, purging each sampling chamber with air.

c. Close all V-2's.
d. "Close" V-6, evacuating station and transfer lines.
e. "Close" V-5 admitting air to the sampling chamber.
f. Open and close each V-2 inducing air flow from V-5 to the sample station tube through V-6, thereby transferring each sample bomb to the bomb holder.

7. Remove sample bombs.

a. Check that all V-2's are closed, securing secondary containment.
b. Open low pressure cap and manually remove bomb holder and bombs.
c. Put seal plugs in each sample bomb to protect experimenter from any leakage past the check valve in the bomb.
d. Replace low pressure cap and "open" V-6. Transfer bombs to processing laboratory.
e. Turn off vacuum pump.

E. Testing

Since a pneumatic gas sampling system has not been built in any existing facility, it is expected that a prototype will be built to check operation and feasibility of the system. This prototype would point out any unexpected operational difficulties that might be encountered and also would serve to check out various components including such questionable items as the small check valve (V-1), the high temperature ball valve (V-2), etc., that might require further developmental work.

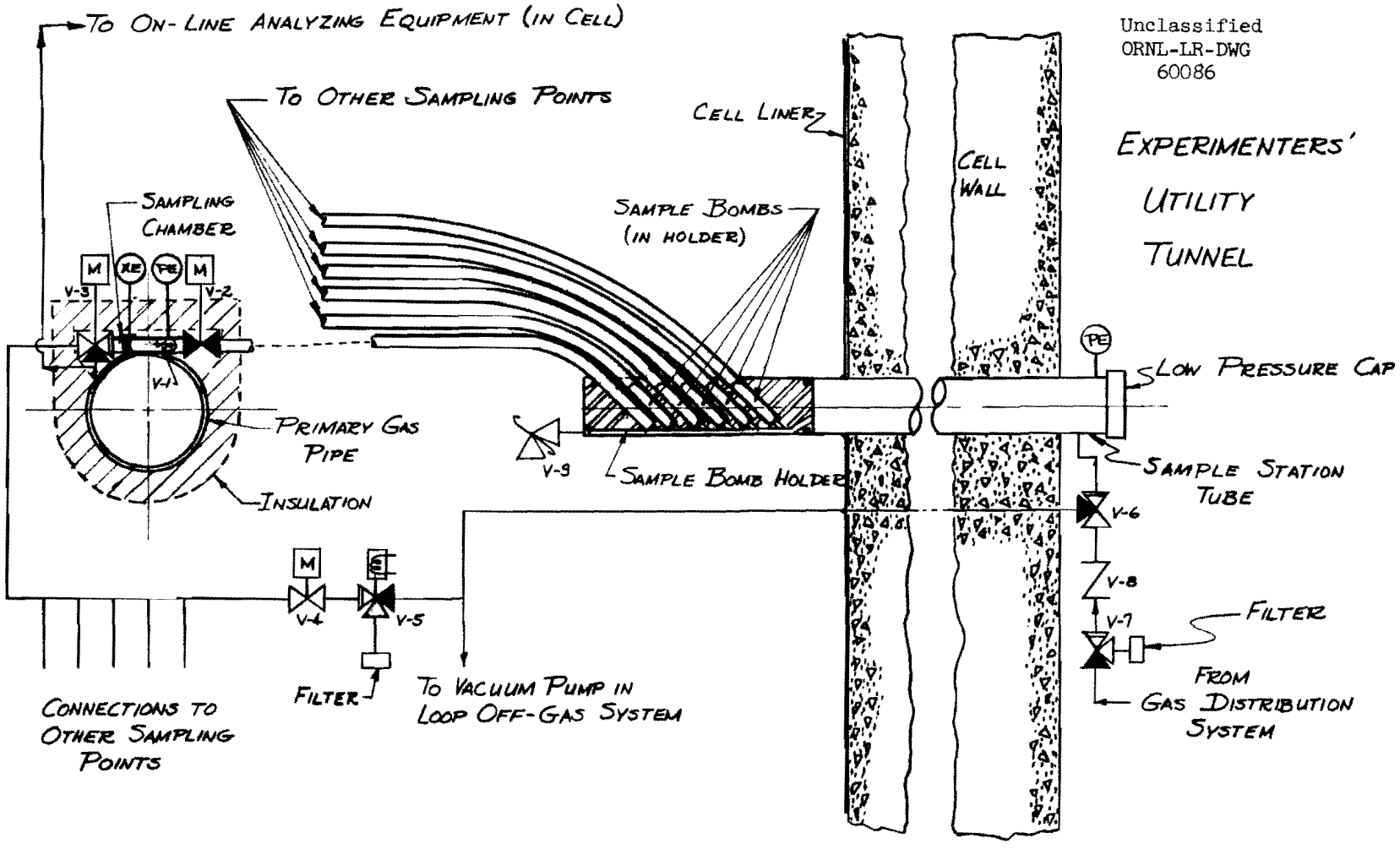

Fig. 1. Proposed Gas Sample System.

Code Designation B.17.0
Date of Issue June 12, 1961

EGCR EXPERIMENTAL LOOPS
CRITERIA

Subject: CRITERIA FOR CELL PENETRATIONS

All penetrations of the EGCR experimental cells must satisfy two basic criteria. First, since the penetrations serve as part of the secondary containment for the experimental loop piping, leakage through them must be negligible. Secondly, the penetrations must be adequately shielded to prevent excessive radiation from streaming through the penetrations, thereby creating a radiation hazard to personnel working in adjacent areas.

It is impossible to set a value for maximum allowable leak rate through any penetration since the total number of penetrations is unknown. The maximum total leak rate tolerated from the cell at a cell pressure of 12 psig is one weight percent of the contained air over a 24-hr period. The cell liner is leak-tested independently with the penetrations blocked off to insure a leak rate less than 0.5 wt % of the contained air at the design pressure of 12 psig. Consequently, the total leakage through all penetrations, including the floor drain and ventilation lines must not exceed 0.5 wt % of the contained air at 12 psig. All cell penetrations will be designed for the same pressure and temperature as that of the cell liner - 12 psig and 150°F.

Each cell penetration into a working area must be adequately shielded to prevent radiation streaming into the area. Since the penetrations from the cell into the reactor containment vessel already have adequate shielding, this criterion affects only those penetrations from the crane bay into the cell and from the experimenters' utility tunnel into the cell. These penetrations require a minimum shield thickness equivalent to 3 ft of ordinary concrete (7.6 in. lead) for direct radiation from the loop piping. These shields may be located either within or external to the cell. Shadow shields may also be employed. Careful analysis of each shield will be required to determine that it is satisfactory.

Code Designation C.5.0.1
Date of Issue May 1, 1961

EGCR EXPERIMENTAL LOOPS
CRITERIA

Subject: CO_2 SUPPLY SYSTEM CRITERIA

1.0 General

The function of the CO_2 Supply System is to provide gaseous CO_2 to all cells. The gas purity, mass, pressure and temperature will be sufficient for all services. The system will be located in an extension to the experimenters' crane bay.

The CO_2 delivered to the system will be Coleman Grade, with a minimum purity of 99.99% by volume. The dew point will be -30°F or lower. The impurity analysis will be as follows:

CO less than 10 ppm by volume
O_2 less than 20 ppm by volume
N_2 less than 80 ppm by volume
SO_2 less than 5 ppm by volume
H_2S less than 5 ppm by volume
oil less than 5 ppm by volume

CO_2 will be required for:

a. loop fill
b. through-tube pressurization
c. gas storage tank fill
d. buffer gas supply
e. gas sample station purge

The CO_2 Bulk Liquid Storage Tank will have a capacity of 2 tons of liquid CO_2 or greater. This will be sufficient for at least 7 loop fills for 1000 psia loops. The CO_2 Vapor Storage Tank, from which vapor may be drawn directly (without drying) for loop fill, will have sufficient volume for 1 loop fill. The Liquid CO_2 Supply Pump, the CO_2 Vaporizer, and the Silica Gel Drying Beds will be sized to provide at least 2 loop fills of dry vapor in an 8-hr period of time. The dry vapor will be held at 200°F or higher to assure that solid and/or liquid CO_2 does not form when CO_2 vapor is throttled from high pressure to low pressure.

The highest pressure requirement for CO_2 vapor is for the Buffer Gas System. For a 1000 psia loop, 1100 psia vapor will be required. The CO_2 Vapor Storage Tank will normally be filled to 2000 psia.

2.0 Principles of Operation

Liquid CO_2 will be transported to the EGCR site by truck. Hose will be run from the truck to the fill connection on the CO_2 Bulk Liquid Storage Tank. Normal operation of the system may be continued while filling the liquid storage tank.

During fill of the CO_2 Vapor Storage Tank, liquid flows from the liquid storage tank through a filter to the Liquid CO_2 Supply Pump at 0°F. This positive displacement (diaphragm) pump then delivers liquid CO_2 to the inlet of the Silica Gel Drying Beds with a significant increase in temperature (since the compression process is neither reversible nor adiabatic). Liquid CO_2 passes through one or the other parallel connected silica gel beds where the moisture content is reduced. Upon leaving the silica gel bed, the liquid CO_2 is vaporized (normally without boiling taking place - see Section 3.4) by a constant pressure heating process. Dry CO_2 vapor is then delivered to the CO_2 Vapor Storage Tank from which it may be withdrawn directly for the various loop uses.

It should be noted that CO_2 liquid, rather than vapor, is passed through the silica gel beds. This is done in order to arrive at the vapor storage tank state point of 2000 psia and 200°F. without the use of a high pressure gas compressor. While vapor could have been passed through the silica gel beds and then compressed, the vapor compression process would have resulted in temperatures far in excess of 200°F. A cooler would have been required and the power requirements and size of the compressor would greatly exceed those of the liquid pump. The compressor would have to be downstream of the silica gel beds since silica gel is not very effective at temperatures in excess of 80°F.

If it becomes necessary to drop vapor storage tank pressure to a value below the required buffer gas pressure, buffer gas requirements will be met by connection of a gas bottle to the emergency connection in the Gas Distribution System or by starting the pump and bypassing the vapor storage tank.

Various lines are shown leading to the He-CO_2 vacuum pump. Two of these lines come from the outlets of the silica gel beds. After replacement of the silica gel, it will be necessary to draw a vacuum on the bed and adjacent piping to eliminate air. Dry CO_2 vapor must then be bled back through the outlet of the CO_2 Vapor Storage Tank to the drying bed. This is necessary since the discharge of liquid directly (on pump startup) to a region at a vacuum would otherwise result in flashing to dry ice and possible plugging.

Additional vacuum lines are shown at the outlet of the CO_2 vaporizer and at the outlet of the CO_2 Vapor Storage Tank. These will permit air removal following maintenance on either unit. Following maintenance

on the vaporizer, it may be necessary to evacuate and then refill with dried vapor from the vapor storage tank. Following maintenance on the vapor storage tank, it may be necessary to evacuate and then refill with vapor (not dried) from the liquid storage tank. This vapor should then be dried by recirculation from the liquid storage tank, through the silica gel beds, through the vaporizer, through the vapor storage tank and back to the liquid storage tank. This recirculation method should be used any time that excessive moisture is found in sampling from the vapor storage tank.

The vapor storage tank is wrapped with low pressure steam lines to maintain 200°F gas temperature. In addition, the lines from the vapor storage tank to the Gas Distribution System will be steam traced. The vapor storage tank will be insulated over the steam lines so that it is only necessary to condense sufficient steam to make up for heat losses through the insulation. In view of the low steam flow rates required, condensate will be discarded rather than run back to the source.

3.0 Components

3.1 CO_2 Bulk Liquid Storage Tank

Two different units are being considered for use in this system. One unit is produced by the Cardox Division of Chemetron Corporation; the other is produced by the Liquid Carbonic Division of General Dynamics Corporation. Both are basically the same as far as refrigeration, vaporizing, safety devices, instrumentation and filling. Since the units are loaned rather than bought, no changes to the unit may be made.

Both units are designed to hold CO_2 temperature to 0°F. Each unit includes a vaporizer and a refrigeration unit. Both units are provided with pressure indication, pressure alarm and level indication. Each unit has at least two pressure relief valves and each unit has one rupture disc set well above the relief valve settings.

3.2 Liquid CO_2 Supply Pump

The Liquid CO_2 Supply Pump will be a positive displacement pump designed to pass approximately 3 lb/min of liquid. Suction pressure will vary from 275 to 325 psig. Discharge pressure will vary from 275 to 1985 psig.

3.3 Silica Gel Drying Beds

Two Silica Gel Drying Beds are connected in parallel. The cost of equipment for revivifying silica gel is not warranted when considering the small amount of silica gel used for each loop

fill. Only one bed will be used at a time. The other bed may be isolated, removed (by breaking flanged connections) for replacement of silica gel, refilled, evacuated, and refilled with dry CO_2 vapor. No interference with normal system operation is required during silica gel replacement.

Preliminary estimates of the size of bed required were established in CF 60-9-20, "Use of CO_2 as a Coolant in EGCR Test Loops". The silica gel beds to be used in the Helium Supply System will be identical and therefore interchangeable. The specified flow rate was reduced from that of the above-mentioned reference since there appears to be no need to provide more than one loop fill of dried vapor in four hours. The sizes of the pump, drying beds, and vaporizer are therefore kept small.

3.4 CO_2 Vaporizer

The vaporizer will be designed for a heat transfer rate of approximately 25,000 Btu/hr. This will require a steam flow rate of approximately 26 lb/hr. For operation above the critical pressure the vaporizer will take compressed liquid and deliver superheated vapor with no discontinuity (boiling will not take place). At pressures below the critical, the vaporizer will act as a CO_2 boiler. The vapor storage vessel pressure will be permitted to drop below the critical during loop fill.

Low pressure steam will be used as the hot fluid in the vaporizer. Temperature control problems will then be minimized since it is only necessary to supply enough steam to obtain 200°F CO_2 outlet temperature with 0°F CO_2 inlet temperature. Since positive displacement pumps of the required capacity are available in the form of metering pumps, the CO_2 flow rate (and thus the heat load) should not vary considerably. If more than the required amount of steam were supplied at 5 psig (saturation temperature of 228°F), assuming that no better than a 10°F approach is likely, the highest CO_2 temperature leaving the vaporizer would be 218°F. A temperature of 218°F would reduce vapor storage capacity somewhat, but would not otherwise affect system performance. This system operation is satisfactory even with no temperature control whatsoever.

3.5 CO_2 Vapor Storage Tank

The CO_2 Vapor Storage Tank will have a capacity of at least 65 cu ft. This will provide one loop fill for a 1000 psia loop with an isothermal drop in pressure from 2000 psia to 600 psia at 200°F. It is not necessary, therefore, to process additional

CO_2 while filling a loop. The operator may choose to add CO_2 to the vapor storage tank or not while filling a loop. As mentioned in Section 2.0, the tank will be wrapped with low pressure steam lines and then covered with insulation in order to maintain the gas at 200°F.

3.6 He-CO_2 Vacuum Pump

A vacuum pump will be required for use with both the Helium Supply System and the CO_2 Supply System. This pump will be used during initial fill of the system, during silica gel replacement and after any maintenance operation which requires opening of the system. After opening any section of the system to atmosphere, that section should be evacuated and then refilled with dry gas or filled with moist gas followed by drying of the gas.

3.7 Valves

All valves should have soft seats. Valves downstream of the pump and valves in the vacuum lines may see 2000 psia differential pressure for long periods of time. Vent and drain valves should be included as required for cleaning of the system prior to initial fill and after maintenance. Since the system supplies vapor to each experimental loop and to each Buffer Gas System (where tightness of valves is imperative) cleanliness is vital.

3.8 Overpressure Protection

Carbon dioxide poses some unusual problems in overpressure protection. Relief of high pressure liquid CO_2 to atmospheric pressure results in the formation of dry ice. Where large amounts of liquid are relieved, a definite possibility of plugging of the relief valve outlet exists. Liquid relief valves are included on the discharge of the liquid supply pump and at each silica gel bed. These relief valves are intended to protect against overpressure resulting from closure of valves at each end of a line containing 0°F liquid followed by heating of the liquid. Under these conditions only a small amount of liquid must be relieved to protect the system. The liquid supply pump will be provided with an internal relief valve to protect against overpressure resulting from operation of the pump with the discharge line closed off. Vapor relief valves will be provided for the vaporizer and the vapor storage tank.

3.9 Instrumentation

The CO_2 Bulk Liquid Storage Tank will be supplied as an assembly with its own instrumentation. Since the tank is loaned rather than purchased, no changes to the instrumentation will be permitted.

The tank is provided with local pressure alarm, local pressure indication and local level indication.

The instrumentation requirements for the remainder of the system are as follows:

a. supply pump discharge pressure
   local indication
   local high alarm

b. silica gel bed inlet temperature
   local indication
   local high alarm

c. silica gel bed outlet and vapor storage tank outlet moisture
   local indication
   local high alarm
   remote high alarm

d. vaporizer outlet temperature
   local indication
   local high alarm

e. vapor storage tank temperature
   local indication
   local high alarm
   local low alarm
   remote high alarm
   remote low alarm

f. vapor storage tank pressure
   local indication
   local high alarm
   local low alarm
   remote high alarm
   remote low alarm

g. vacuum pump pressure
   local indication

3.10 Filter

A filter should be provided at the inlet of the liquid supply pump if one is not provided with the pump. It should be noted that two filters are provided in series as part of the Gas Distribution System upstream of the takeoff points for loop fill, through-tube pressurization, gas storage tank fill, buffer gas supply, or gas sample station purge.

4.0 Design Data

All lines and equipment should be designed for 2400 psia at 250°F except the liquid storage tank and the vacuum pump equipment downstream of the inlet stop valve. All piping other than instrument lines will be 1-in. pipe, sch. 80, ASTM A106B. All lines will require insulation, either to minimize heat loss (and thus steam requirements) or to assure that moisture does not freeze on cold lines.

5.0 Hazards

Failure of any portion of the system will not result in any hazards to the loops. In addition, all portions of the system will be accessible at all times for maintenance or repair. Loss of the vapor storage tank may cause a delay in filling the loop but no hazard. The valving arrangement permits supply of CO_2 to the Gas Distribution System without passage through the vapor storage tank. As mentioned in Section 2.0, gas bottles will be available within the tunnel for buffer gas supply in the event that the CO_2 Supply System is inoperative.

All CO_2 vents, drains, and relief valves will discharge to the outside atmosphere to prevent asphyxiation.

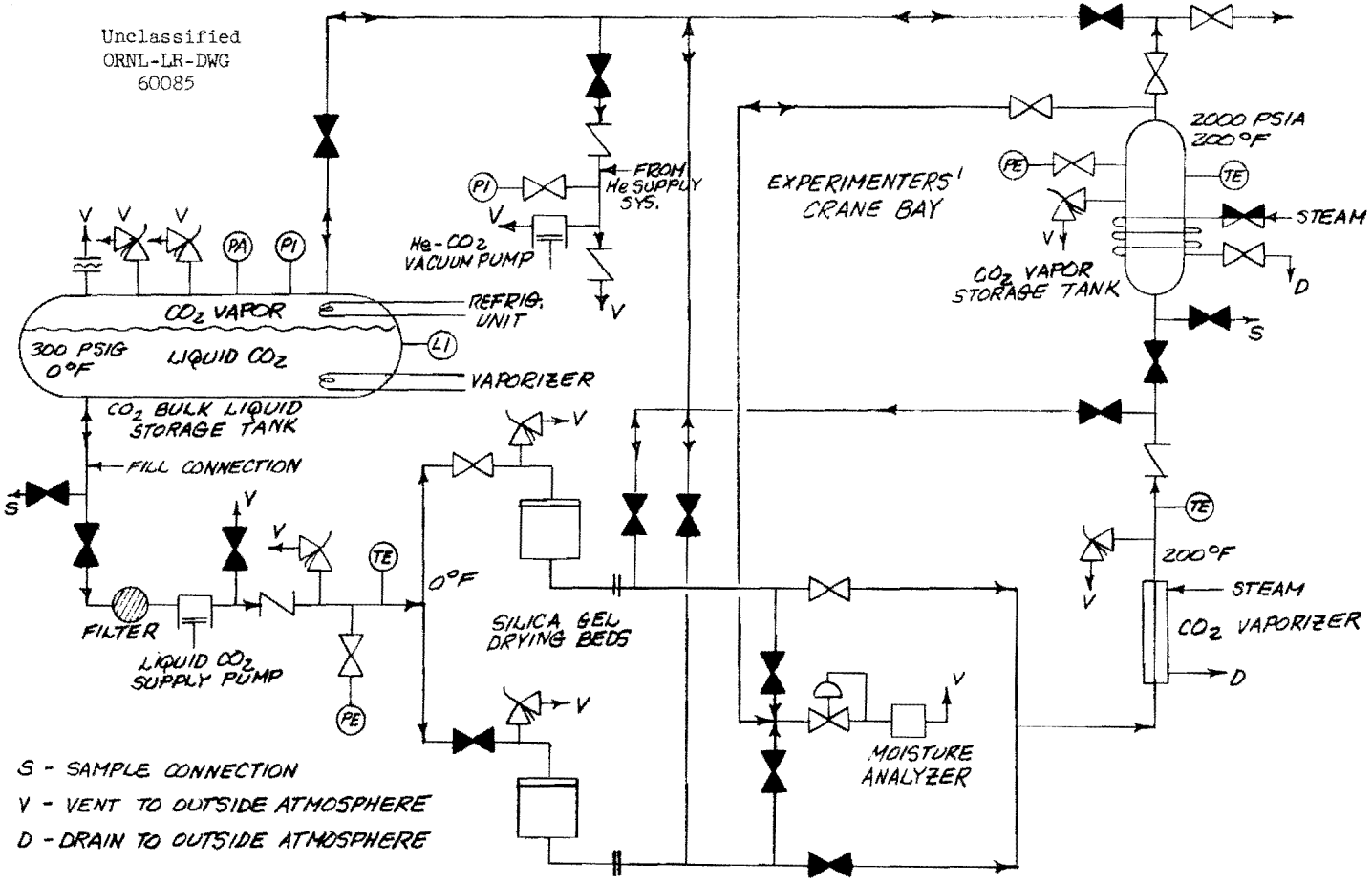

Fig. 1. CO_2 Supply System.

Code Designation D.2.2
Date of Issue May. 5, 1961

EGCR EXPERIMENTAL LOOPS
CRITERIA

Subject: DUMMY STRINGER CRITERIA

1.0 General

The dummy stringer will basically be an experimental stringer (see Experimental Stringer Criteria) with the experimental fuel assembly replaced by a dummy fuel assembly. The dummy stringer will consist of a top nozzle breech closure (Bridgman closure), a shield plug, support structure for a dummy fuel assembly, a dummy fuel assembly, insulation, and instrumentation. The dummy stringer will be used for test purposes prior to initial power operation of any loop. The reactor may or may not be in operation while a dummy stringer is used.

The main uses of the dummy stringer will be for testing of various components at or near normal loop operating pressures, temperatures, and flow rates.

Typical tests to be run on each of the components of a dummy stringer will be covered in Section 2.0. Additional tests will be covered in Section 3.0

2.0 Description

Bridgman Closure

The Bridgman closure for the dummy stringer will be identical to that used on an experimental stringer. Tests will be run to show the suitability of the design of the o-ring seal at temperature and pressure. Tests will also be run to determine whether or not the o-ring must be replaced each time the seal is broken. The procedure and equipment for replacement of the o-ring will be tested.

Some of the thermocouples normally used for measuring fuel element temperature in an experimental stringer will be used to measure temperature in the vicinity of the Bridgman closure. It is required that the Bridgman closure be held at less than 350°F during normal loop operation with an experimental stringer. The radiation heating of the shield plug is not known and cannot be determined experimentally with a dummy stringer. Therefore, this temperature measurement can only give the contribution of heat conduction and convection along the shield plug and out radially through the inner and outer tee sections to high temperature at the Bridgman closure.

The limit switches, which are used to indicate vertical and rotational alignment of the Bridgman closures before the sealing operations are performed, will receive a test under simulated normal operating conditions. The electrical connector in the closure will also receive an operating test.

Shield Plug

The shield plug will be identical to that used on an experimental stringer. As previously mentioned, thermocouples will be used to show that Bridgman closure temperature has been limited to less than 350°F. Shielding data will be obtained and used to evaluate the adequacy of the experimental stringer shield plug.

Dummy Fuel Assembly

It is presently planned to test a wide variety of fuel assemblies of various geometries within the EGCR loops. The dummy fuel assembly should be identical as far as weight and geometry to the first experimental fuel assembly to be inserted in the through-tube. Since the dummy fuel assembly must necessarily be constructed of a very dense material and is therefore subject to considerable gamma heating, some gas flow must be maintained in the loop at all times during which the dummy stringer is installed if the reactor is or has been at power. Dummy fuel element temperatures will be monitored and gas flow will be adjusted to limit temperatures. As for the case of the experimental stringer, the maximum permissible gas inlet temperature is 950°F and the maximum permissible gas outlet temperature is 1050°F.

Dummy Fuel Assembly Support Structure

The dummy fuel assembly support structure will be identical to that used on an experimental stringer.

Insulation

All insulation normally handled as an assembly on the experimental stringer will be included on the dummy stringer. The dummy stringer will be used to determine whether or not reflective insulation will be damaged during installation or removal operations. As described in the Experimental Stringer Criteria, insulation from the top nozzle tee to the bottom of the experimental stringer will be installed as part of the experimental stringer assembly. Insulation below that point will have previously been installed as a part of the uninstrumented experimental assembly. In order to test the joint between the stringer insulation and the uninstrumented experimental assembly insulation, a dummy uninstrumented assembly (see Section 4.0) will be required. Since the through-tube and the insulation will not have the same amount of thermal growth, some form of slip joint between the two sections of insulation will be required. The dummy stringer may be used to prove the adequacy of this joint design.

Instrumentation

The pressure and differential pressure transmitters included in the experimental stringer will also be included in the dummy stringer. Since the dummy stringer may be inserted in the through-tube for long periods of time with the reactor in operation, it may not be possible to reuse the venturi from the dummy stringer in the experimental stringer due to activation problems. The differential pressure transmitters for dummy fuel assembly pressure drop and flow may be calibrated prior to installation in the through-tube after the dummy stringer has been assembled.

Thermocouples will be included as required to perform the above tests. Since the design of the experimental stringer will require that some pneumatic tubing and thermocouple leads be placed in the gas stream, the dummy stringer should be designed with similar routing of leads and tubing in order to evaluate the effect of the leads and tubing on pressure drop. All safety instrumentation must be in use when a dummy stringer operation is under way.

3.0 Additional Tests

In addition to the above-mentioned component tests of the experimental stringer components, it will be possible to obtain data on loop pressure drop, check insertion and removal procedures, and see the effects of differential thermal expansion on stringer leads and tubing. The dummy stringer will probably be used also after major repairs are done on a loop before an experimental stringer is inserted.

4.0 Dummy Uninstrumented Assembly

As mentioned in Section 3.0, a nonfueled version of the uninstrumented experimental assembly is required. This should be identical to the uninstrumented experimental assembly except that the fuel assembly should be replaced by a dummy fuel assembly with the same weight and geometry as a normal fuel assembly. It will be used to establish the adequacy of the insulation slip joint design, to obtain pressure drop data, and to check procedures for installation and removal of uninstrumented experimental assemblies.

Code Designation D.2.3
Date of Issue May 18, 1961

EGCR EXPERIMENTAL LOOPS
CRITERIA

Subject: EXPERIMENTAL STRINGER CRITERIA

1.0 General

The experimental stringer (instrumented experimental assembly) consists of a top nozzle breech closure (Bridgman closure), a shield plug, support structure for an instrumented fuel assembly, a fuel assembly, insulation, and the instrumentation necessary to obtain useful data. Two sketches of proposals for the upper portion of the stringer have been made (see ORNL Sketches E-SK-JTC-1-13-61 and E-SK-JTC-1-30-61). While each sketch gives a general idea of the stringer assembly, both sketches were prepared prior to the establishment of any criteria and therefore do not conform entirely to the following criteria.

2.0 Description

2.1 Bridgman Closure

Access to the through-tube for insertion or removal of experimental assemblies (instrumented and uninstrumented) will be by means of a breech closure which seals off the upper end of the top nozzle inner tee section. The closure will consist of a modified EGCR reactor nozzle breech closure assembly (AC Dwg. 5927-EGCR-MS-219). Among the modifications to be made are:

(a) The outer spline ring (Item 3 on Dwg. MS-220) must be shortened. The nature of this modification is shown on ORNL Dwgs. E 10127 and E 10129.

(b) The requirements for the electrical connector in the breech body will differ from that of the standard EGCR closure.

(c) The closure will be provided with an elastomer crush type o-ring rather than the metal o-ring of the standard EGCR closure. It is felt that a metal o-ring seal would not meet the leak tightness requirements for the loops.

Provisions must be made for replacement of the o-ring each time the closure seal is broken. Tests will be run to prove the adequacy of the seal design.

(d) As shown on Dwg. MS-220, the standard EGCR closure will be constructed of AISI 4140, which is not an ASME Code material. The closure supplier must obtain Code Committee approval for the materials used in the closures for the experimental loops.

(e) The closures for the experimental loops must be designed for 1100 psia to full vacuum with a design temperature of 350°F. The closure will be hydrostatically tested to 1650 psia. The design temperature of 350°F was established as a result of the decision to use an elastomer for the seal.

The shield plug will be connected to the closure by means of a bolted split ring. Sufficient space will be left between the closure and the shield plug to permit installation of a pressure transmitter and two differential pressure transmitters. This will eliminate the need for penetrating the Bridgman closure with pneumatic tubing. Only electrical leads will penetrate the closure.

The Bridgman closure will support the full weight of the shield plug, experimental fuel assembly and support structure only during lifting and lowering operations. With the closure in position, the weight of the experimental fuel assembly and support structure will be supported by the shield plug. The shield plug in turn will be supported by the top nozzle inner tee section. Any relative motion between the top of the shield plug and Bridgman closure due to differential thermal expansion between the top nozzle inner tee section and the shield plug will be taken up at the split ring. This should be taken into account in mounting the pressure and differential pressure transmitters and in routing thermocouple leads.

Present designs indicate two position limit switch assemblies for each top nozzle breech closure on the reactor. The switches are used to indicate both vertical and rotational alignment of the closures before sealing operations are performed.

Further information on the closures may be found in ORNL Job Specification J. S. 128-117.

2.2 Shield Plug

In order to complete the integrity of the main biological shield, it is necessary to insert a shield plug into the top nozzle inner tee section. The shield plug prevents streaming of neutrons and gamma rays through the biological shield by way of the nozzles. With the reactor in operation, access to the service machine room is permitted only while all reactor shield plugs are in place. In general, access to the service machine room is not permitted even with the reactor shut down unless all reactor shield plugs are in place. If a shield plug is removed from a nozzle and the service machine is attached to that nozzle, access is permitted with the reactor shut down. During through-tube removal, access to a limited area of the service machine room is permitted although the shield plug is removed and the service machine is not hooked up to that nozzle.

Unlike the dummy shield plug (see Criteria for Top Dummy Shield Plug Assemblies), the shield plug included in the experimental stringer assembly is severely limited in length. It must not extend below the branch of the top nozzle tee section since this would block gas flow in the loop. This results in a shield plug of approximately half the length of the EGCR shield plugs.

It is intended that experimental data will be taken on the dummy shield plug before design of the experimental shield plug is completed. The material of the experimental shield plug has not yet been established. Since the design temperature of the Bridgman closure is 350°F, every effort should be made in the design of the shield plug to limit heat transfer along the length of the plug. In order to cut down heat conduction along the shield plugs, a series of deep rectangular grooves should be cut around the circumference of the shield plug. The shield plug should have very little clearance from the top nozzle inner tee section to limit convection. The only cooling provided for the shield plug is an air flow of 400 lb/hr outside of the top nozzle outer tee section. This will not contribute greatly to the cooling of the shield plug since heat must be transferred through both the inner and outer tee sections plus numerous gas films.

All instrument leads and tubes penetrating the shield plug (see Section 2.5) should be spiraled to prevent streaming. In routing instrument leads and tubes, allowance should be made for differential thermal expansion between the shield plug and the leads and tubes.

2.3 Instrumented Fuel Assembly

It is presently planned to test a wide variety of fuel assemblies within the EGCR loops. A number of these tests are described in CF 60-1-1. These include assemblies consisting of multi-rod clusters clad with either stainless steel or beryllium, parallel plate arrays of unclad graphite -UC or $BeO-UO_2$ mixtures, and unclad $BeO-UO_2$ tubes placed within bored hexagonal prisms. The requirements as to means of support, use of attemperation, and so on are highly dependent on the nature of the experiment being run. It is possible therefore only to describe in general terms the requirements of that portion of the stringer assembly containing the fuel assembly.

The service machine height limits the length of an experiment that can be handled in one piece. Only 10.2 ft of the active core length (14.5 ft) can be used for instrumented fuel assemblies. The lower 4.3 ft of moderator section may be filled with an uninstrumented fuel assembly. The uninstrumented experimental assembly must be installed and removed from above as a separate piece (see Criteria for the Experiment Removal Cooling System).

The maximum permissible through-tube gas inlet temperature is 950°F, the maximum permissible through-tube gas outlet temperature is 1050°F. Where higher experiment inlet gas temperatures are desired, uninstrumented experimental assemblies will be used below the experimental stringer. The uninstrumented assemblies will serve as preheaters. Where higher experiment outlet temperatures are required, attemperation with the inlet gas may be used.

2.4 Instrumented Fuel Assembly Support Structure

The nature of the support structure extending between the shield plug and the instrumented fuel assembly is dependent upon the experiment being run. Support may take many forms: a tube, a series of rods, etc. For an attemperated assembly, a tubular section (attemperator sleeve) must extend at least from the bottom of the fueled section to a point 5 pipe diameters above the venturi (see Section 2.5.1) in order to assure that all flow past the test section passes through the venturi and to maintain the accuracy of the venturi. For an attemperated experiment, mixing of the attemperator stream and the test section stream may take place at any point above this tubular section but before entering the branch of the top nozzle tee section. If mixing takes place near the branch of the tee, growth of the through-tube will be minimized since attemperator flow will continue for a greater length of the through-tube. On the

other hand, if mixing takes place shortly after leaving the venturi, hotter gas (mixed streams) will be in contact with the through-tube insulation resulting in greater thermal growth of the through-tube but mixing will be more complete when entering the branch of the tee.

Either a mixing chamber should be provided or through-tube insulation thickness should be increased where the attemperator stream and the test section stream come together. This will prevent overtemperature either at the through-tube or at the top nozzle tee section.

If the support structure takes the form of a tube up to the vicinity of the shield plug, provisions must be made for gas flow out of the tube and into the branch of the tee with a minimum of pressure drop. Three methods which might be used are:

(a) Replace the tube with a series of rods for support in the area directly beneath the shield plug. Since the gas stream will be directed against the shield plug, curve the end of the shield plug to direct flow toward the branch of the tee. If such a method is used, means must be provided for always aligning the curavature of the shield plug with the branch of the tee.

(b) Replace the tube with a series of rods for support in the area directly beneath the shield plug. Do not curve the end of the shield plug to direct flow. No alignment of the shield plug will be required as in (a) but the pressure drop will be higher.

(c) Carry the tube all the way to the shield plug and provide large openings in the tube around all sides. This is essentially the same as (b) with less flow area. No alignment of the shield plug is required.

As discussed in the Experiment Removal Cooling System Criteria, an annular space must be provided between the support tube and the top nozzle inner tee section to provide a gas flow path when first lifting the instrumented experimental assembly. During initial lifting, gas will pass up past the experiment, down through the annulus between the support tube and the inner tee section and out through the branch of the tee. After sufficient lifting of the assembly, the shield plug will have moved high enough to provide a flow path through the run of the tee into the service machine. Before lifting, the shield plug fills the run of the tee.

The fuel assembly support structure must be able to withstand the flow forces following sudden depressurization of the loop.

2.5 Instrumentation Requirements (see Fig. 1)

2.5.1 Flow Through the Experiment

In order to obtain heat transfer data on attemperated experimental fuel assemblies it will be necessary to measure flow past the test section (total loop flow minus attemperator flow). For unattemperated experimental assemblies, in-cell loop flow measurement is identical to flow through the test section and is therefore the only flow measurement required.

For attemperated experimental fuel assemblies a venturi will be located downstream of (above) the test section. In order to compute the flow, the following measurements will be taken: differential pressure across the venturi (upstream to throat) ΔP_{23}, venturi inlet pressure (test section outlet pressure) P_2 and venturi inlet temperature (test section outlet temperature) T_3.

The design of the venturi used with various experiments will vary. No single venturi is applicable to both large and small loops. In order to minimize pressure loss through the venturi, it should be machined to provide ideal cross section vs. length for given experimental conditions rather than just a conical nozzle, cylindrical throat and conical diffuser.

A minimum of 5 pipe diameters and preferably 10 or more pipe diameters of straight pipe should be provided upstream of the venturi. A minimum of 5 pipe diameters of straight pipe should be provided downstream of the venturi.

Calibration of the venturi will require the use of a dummy stringer (see Dummy Stringer Criteria). The dummy stringer will be basically an experimental stringer in which the fueled section has been replaced by a section which is the same as far as weight and geometry.

The differential pressure and pressure transmitters for flow determination will be located between the Bridgman closure and the shield plug. Pneumatic tubes will be run from the venturi to the transmitters.

2.5.2 Pressure Drop Across the Experiment

In order to determine the flow vs. pressure drop characteristics of a particular fuel assembly, it will be necessary to measure differential pressure across the experiment ΔP_{12}. A differential pressure transmitter will be located between the Bridgman closure and the shield plug for this purpose. Pneumatic tubes will be run from the fuel assembly to the transmitter.

All pneumatic tubes (see also Section 2.5.1) should be made up of 1/8 in. o.d. tubing of type 347 stainless steel. The tubes must be small enough to minimize routing problems and large enough to keep down delay in transmitting signals. A wall thickness in the range of .020 to .028 in. will probably be satisfactory.

2.5.3 Temperature Measurements

Numerous thermocouples will be required in order to obtain useful data from the experiment and to provide safe operation of the loop. The measurements to be taken for an attemperated assembly are:

T_1 - test section inlet gas temperature

T_2 - fuel element surface or center temperature

T_3 - test section outlet gas temperature (upstream of the point of mixing)

T_4 - attemperator stream outlet gas temperature (upstream of the point of mixing)

T_5 - outlet bulk mean gas temperature (mixed mean temperature)

T_3 and T_4 are not required for an unattemperated assembly. Three operating thermocouples plus two spares are required for the measurement of T_5 since this signal is used to scram the reactor. The number of measurements of T_2 will depend upon the experiment being run and the capacity of the connector penetrating the Bridgman closure (see Section 2.5.4).

2.5.4 Connectors

As mentioned in Section 2.1, all pressure and temperature signals from the experiment will penetrate the Bridgman closure through an electrical connector. No pneumatic signals will pass through the primary containment. The Bridgman closure connector must also pass electrical leads from the pressure and differential pressure transmitters.

The use of a 63 pin connector is presently being investigated. With a maximum of 5 leads per transmitter for each of the 3 pressure or differential pressure transmitters, 15 pins are used. With 2 leads per temperature measurement and 24 temperature measurements, 48 pins are used for a total of 63 pins. The distribution of temperatures measured for an attemperated assembly might then be as follows: Test section inlet gas temperature, 1; fuel element surface or center temperature, 16; test section outlet gas temperature, 1; attemperator stream outlet gas temperature, 1; and outlet bulk mean gas temperature, 5. Eighteen fuel element surface or center temperatures may be measured for an unattemperated assembly due to the elimination of the requirement for measuring T_3 and T_4.

The electrical signals and power leads for the transmitters must then pass through the secondary containment. It is planned to use 4 twenty-pin (minimum) connectors in the top nozzle outer tee section for this purpose. These connectors will be designed for 350°F and 750 psia. Four relatively small connectors rather than a smaller number of large connectors must be used due to space limitations in the area. The connectors must be small enough to pass between the top nozzle blind flange bolts. In addition, the distance between the top of the Bridgman closure and the bottom of the blind flange is only slightly greater than 2 in. Since the connectors cannot penetrate the blind flange itself (the service machine room floor must be clear) the connectors must be less than 2 in. in diameter and must penetrate around the circumference of the top nozzle directly beneath the top nozzle flange. A preliminary sketch of a penetration is shown in ORNL Sketch A-SK-AES-2441. It is not believed that any presently available connector will satisfy the requirements for this application. A development program will be undertaken to design an adequate connector for this application.

2.5.5 Limit Switches

As mentioned in Section 2.1, present designs indicate that each top nozzle breech closure is provided with two limit switch assemblies. The switches are used to indicate both vertical and rotational alignment of the closures before the sealing operations are performed. In addition to their use in sealing operations, the switches control a series of indicator lights (to show that all shield plugs are in place) and provide an electrical interlock on the one

door of the service machine room which does not require a key to open. The other three doors to the service machine room must be opened with a key.

2.6 Insulation

Each through-tube will be provided with reflective insulation which will extend approximately between the top nozzle tee section and the bottom nozzle tee section. Any insulation from the bottom of the experimental stringer to the top nozzle tee section will be integral with the stringer assembly and will be installed and removed with the assembly. Any insulation below the bottom of the stringer will be installed separately prior to installation of the stringer. For attemperated fuel assemblies, insulation must be placed between the attemperator stream and the test section gas stream.

All insulation will be of the reflective type. A minimum of 1/4-in. of insulation should be used inside the through-tube. In special areas such as the area of mixing of the attemperator stream and the test section gas stream, more insulation may be required. Due to the high loop gas pressures used, maximum spacing between sheets of reflective insulation should be 1/8-in. Corrugations should be used between the sheets of insulation to maintain the spacing. It will be necessary to obstruct flow from passing vertically between the sheets of insulation; however, sections should not be sealed since this might result in bursting or collapsing of a section on change in loop pressure. The insulation requirements between the attemperator stream and the test section should be set by the experimenter.

3.0 Stringer Insertion and Removal

Insertion or reinsertion of an experimental stringer into the through-tube is covered separately in the Criteria for Experiment Insertion (Code D.4.1). Removal of an experimental stringer from the through-tube is covered in the Criteria for the Experiment Removal Cooling System (Code D.4.0). Handling of uninstrumented experimental assemblies will also be found in the above criteria.

* indicates not required for unattemperated assembly

Unclassified
ORNL-LR-DWG
60084

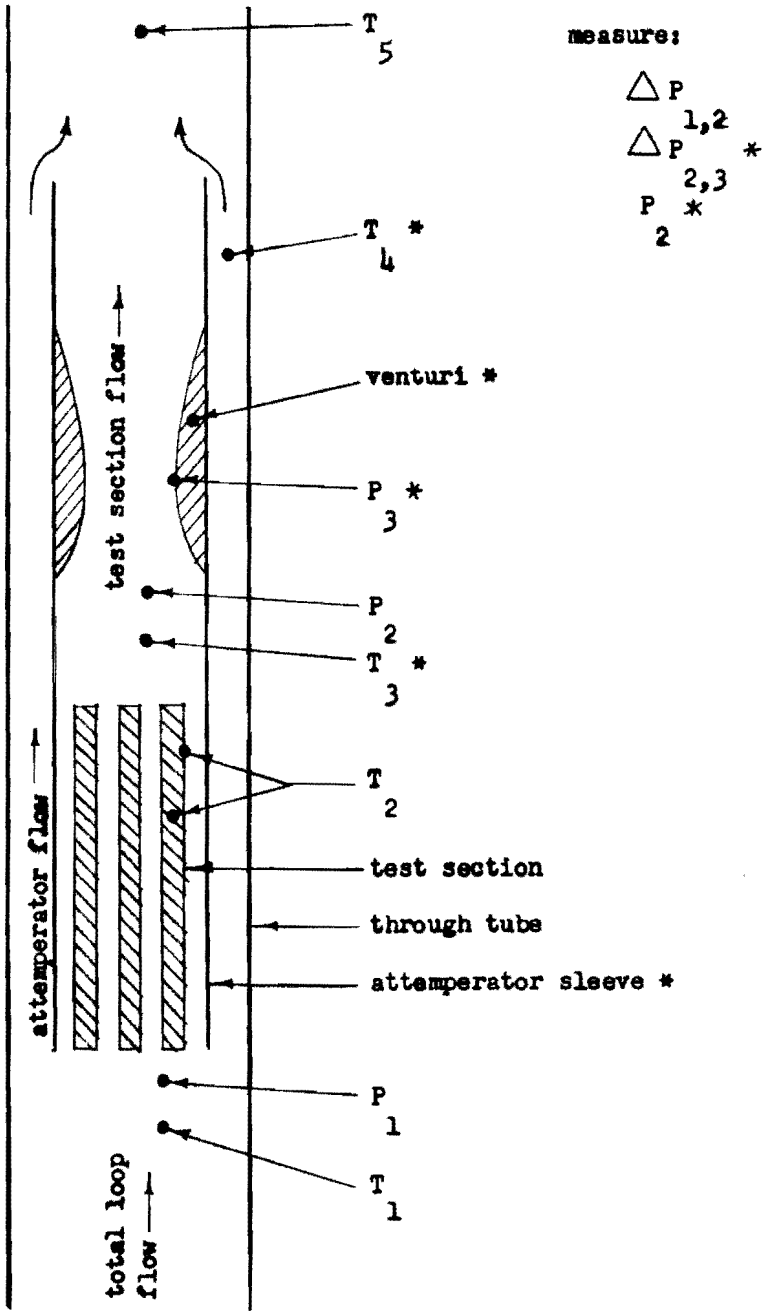

Fig. 1. Instrumentation Requirements.

Code Designation D.4.1
Date of Issue May 29, 1961

EGCR EXPERIMENTAL LOOPS
CRITERIA

Subject: CRITERIA FOR EXPERIMENT INSERTION

1.0 General

The following procedures outline the steps necessary for the insertion of an experimental stringer (either irradiated or non-irradiated) into an experimental loop through-tube. The reactor will be shut down and the loop will be depressurized during all insertion procedures. Section 3.0 assumes that an uninstrumented experimental assembly has previously been inserted into the through-tube if required. This will have been done by the service machine. Section 4.0 includes the uninstrumented experimental assembly in the operations to show the utilization of the various service machine turret positions when it is required to handle an experimental stringer, an uninstrumented experimental assembly, and a dummy shield plug. The insertion procedures use the same piping and equipment required for experiment removal. Some additional equipment (see Section 2.0) must be added to the Experiment Removal Cooling System to satisfy these criteria.

2.0 Additional Equipment Required

In order to pressurize the upper sniffer gas region to 295 psig with helium without the use of a large number of portable cylinders, an additional helium pressure reducing station is required. This pressure reducing station should take its supply from the Helium Supply System bottle trailer (upstream of HV-454 on ORNL Dwg. D-10184). The use of the silica gel drying beds is not required since this gas will not be used in the loop. The pressure reducing station should consist of a pressure regulator (V-17), a local pressure gage for setting the regulator (plus block and bleed valves V-18 and 19), a valve venting to atmosphere for providing flow through the regulator while setting it (v-16), a relief valve to protect the upper sniffer gas region from overpressure (v-15), check valves inside and outside the reactor containment vessel to protect against loss of containment if a line should fail (v-13 and v-14), and a shutoff valve (v-12).

3.0 Insertion of a Non-irradiated Experiment

The final assembly of the various component parts of the experimental stringer (instrumented experimental assembly) will be done at Y-12, Building 9201-3. Testing and inspection will be done at this time. The experimental stringer will be assembled on a handling carrier in the vertical position. The upper end of the carrier will simulate a reactor nozzle.

When inserted in the handling carrier, the Bridgman closure will not support the weight of the shield plug, instrumented fuel assembly and support structure. The weight of the instrumented fuel assembly and support structure will be supported by the shield plug. The shield plug will in turn be supported by the simulated reactor nozzle.

With the completed experimental stringer fastened to the handling carrier and a protective covering in place, the carrier will be lowered to a horizontal position, loaded onto a truck by mobile crane or lift truck and shipped to the EGCR site. At the EGCR site the carrier will be removed from the truck by mobile crane or other means and wheeled into the reactor building through the equipment airlock. On the ground floor the protective covering will be removed from the experimental stringer and final inspection completed. After final inspection, the carrier with the attached experimental stringer will be raised to the vertical position by the main hoist of the service machine room crane through a series of three hatches lined up one above the other in the second, third and fourth floors. The carrier and stringer will then be lifted into the service machine room and suspended in the fourth floor hatch by a cradle. The cradle will be designed to support the carrier in such a position that the service machine can lift the experiment directly from the carrier by attachment of the service machine to the simulated reactor nozzle. The service machine can then transfer the experiment directly into the loop.

4.0 Reinsertion of an Irradiated Experiment

It is assumed that at the start of experiment insertion: Valves v-4, 5, 7, and 18 are open; valves v-1, 3, 6, 8, 9, 10, 12, 16, and 19 are closed. Valve v-11 is positioned to provide pressure relief to the cell. The service machine is at a pressure of 295 psig and is filled with helium. The loop has been brought to a pressure of 295 psig by use of the Through-Tube Pressurizer and Loop Fill System. The service machine turret is in position 1. The uninstrumented experimental assembly is in the service machine in turret position 2. A dummy shield plug is in turret position 4. The service machine is not connected to either the storage hole or the top nozzle. The experiment removal cooler and blower are in operation. The experimental stringer (instrumented experimental assembly) is in a storage hole at a pressure of 295 psig with helium. A dummy shield plug is in the through-tube. The upper sniffer gas region is pressurized to 27 psig with air. The pressure regulator, v-17, has been set to provide 295 psig gas.

It should be noted that with the uninstrumented experimental assembly suspended in turret position 2 inside the stationary shield by the fuel grapple, the experiment handling tool must be in the full up position. With the uninstrumented assembly in this position, the fuel grapple is not in the full up position. Normally the service machine turret could not be rotated without the fuel grapple in the full up position. However, override circuits have been incorporated which permit rotation of the turret under these conditions.

Depressurize the upper sniffer gas region through the loop off-gas valve, v-6. Remove the top nozzle blind flange by hand. Position the service machine above the top nozzle, extend the service machine expansion joint and bolt the mating flanges together by hand. Leak test the flanged joint between the tee section and the service machine expansion joint. Leak testing may be accomplished by pressurizing the volume between the two o-rings and noting loss of pressure. Lower the service machine nozzle shielding around the service machine nozzle. Connect the portable pipe section and bellows between the permanent system piping and the service machine. Evacuate the upper sniffer gas region and the expansion joint volume to the Loop Off-Gas System through v-6, then pressurize with helium to 295 psig through v-12. Equalize the pressures on either side of v-10 by use of the service machine valve bypass line (line NH-620A-1 1/2"-8 on AC Dwg. No. 5927-EGCR-PS-61). Open the service machine valve, v-10. It should be noted that the service machine valve cannot be opened when there is any significant differential pressure across the valve. Unlock the Bridgman closure with the nozzle closure tool (turret position 1). Retract the nozzle closure tool into the service machine. Close v-10. Rotate the service machine turret to position 3. Equalize pressures on either side of v-10. Open v-10.

Remove the dummy shield plug with the replacement shield plug installation tool. Close v-10. Rotate the service machine turret to position 5. Equalize pressures on either side of v-10. Open v-10. Open v-1 and 3. Close v-5. Start the loop compressors and evaporative cooler.

Lower the uninstrumented experimental assembly into the through-tube with the fuel grapple. Open v-5. Close v-1 and 3. Close v-10. Rotate the service machine turret to turret position 3. Equalize pressures on either side of v-10. Open v-10.

Insert the dummy shield plug with the replacement shield plug installation tool. Retract the replacement shield plug installation tool. Close v-10. Rotate the service machine turret to position 1. Equalize pressures on either side of v-10. Open v-10. Lock the Bridgman closure with the nozzle closure tool. Retract the nozzle closure tool and close the service machine valve. Depressurize and evacuate the upper sniffer gas region and the expansion joint volume with the Loop Off-Gas System through v-6. Admit clean helium to the sniffer gas region and expansion joint volume through v-12. Raise the shielding from around the service machine nozzle. Unbolt the service machine. Retract the service machine nozzle. Remove the portable pipe section and bellows. Move the service machine clear of the top nozzle tee section and replace the blind flange by hand. Leak test the blind flange.

The service machine is now ready to remove the irradiated experimental stringer from the storage hole. The details of replacement of the experimental stringer gasket, attachment of the service machine to the

storage hole flange, withdrawal of the irradiated experimental stringer into the service machine, insertion of the dummy shield plug (from turret position 4) into the storage hole, and disconnection of the service machine will not be covered in these criteria. The methods of insertion and removal at the storage hole are basically the same as those at the through-tube. It is assumed that the above operations have been completed and: Valves v-4, 5, 7, and 18 are open; valves v-1, 3, 6, 8, 9, 10, 12, 16, and 19 are closed. The service machine is not connected to either the storage hole or the top nozzle. The experiment removal cooler and blower are in operation. The experimental stringer is in the service machine in turret position 2. The service machine turret is in position 1 as a result of closure of the Bridgman closure on the dummy shield plug in the storage hole.

Remove the top nozzle blind flange by hand. Position the service machine above the top nozzle, extend the service machine expansion joint and bolt the mating flanges together by hand. Leak test the flanged joint between the tee section and the service machine expansion joint. Leak testing may be accomplished by pressurizing the volume between the two o-rings and noting loss of pressure. Lower the service machine nozzle shielding around the service machine nozzle. Connect the portable pipe section and bellows between the permanent system piping and the service machine. Pressurize the upper sniffer gas region and the expansion joint volume to 295 psig with helium through v-12. Equalize pressures on either side of v-10. Open the service machine valve, v-10. Unlock the Bridgman closure with the nozzle closure tool. Retract the nozzle closure tool into the service machine. Close v-10. Rotate the service machine turret to position 3. Equalize pressures on either side of v-10. Open v-10.

Remove the dummy shield plug with the replacement shield plug installation tool. Close v-10. Rotate the service machine turret to position 2. Equalize pressures on either side of v-10. Open v-10. Open v-1 and 3. Close v-5.

Lower the experimental stringer into the through-tube with the experiment handling tool. Retract the experiment handling tool. Cut off experiment removal blower flow. Close v-10. Rotate the service machine turret to position 1. Equalize pressures on either side of v-10. Open v-10. Lock the Bridgman closure with the nozzle closure tool. Retract the nozzle closure tool and close the service machine valve, v-10. Depressurize and evacuate the upper sniffer gas region and the expansion joint volume with the Loop Off-Gas System through v-6. Admit clean air to the upper sniffer gas region and expansion joint volume through v-8. Raise the shielding from around the service machine nozzle. Unbolt the service machine. Remove the portable pipe section and bellows. Move the service machine clear of the top nozzle tee section. Attach the instrument leads which connect between the Bridgman closure connector and the four connectors in the top nozzle outer tee section. Replace the blind flange by hand. Leak test the blind flange.

The service machine is now ready to deposit the dummy shield plug into a storage hole. The details of this operation will not be covered in these criteria. The methods of insertion of the dummy shield plug in the storage hole are basically the same as insertion of the dummy shield plug into the through-tube.

The above procedures make no mention of insertion of an experimental stringer into a loop to use CO_2 as coolant. In order to hold CO_2 requirements to a minimum, replacement of helium with CO_2 should take place after insertion of the experiment. This will eliminate the need for filling the entire service machine with CO_2. Replacement may be done by a purge process.

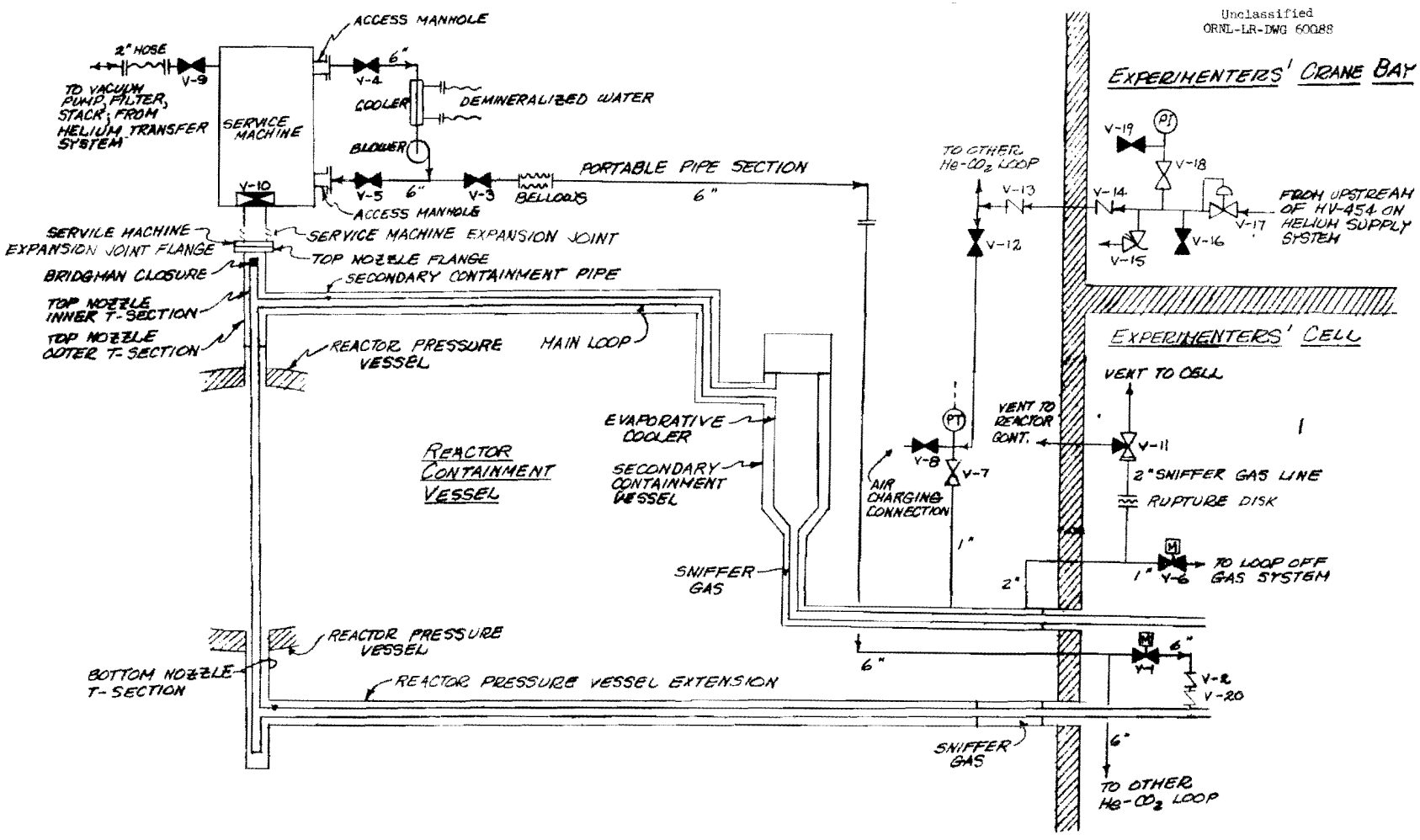

Fig. 1. Experiment Insertion.

D.2.5
D.2.6
Code Designation D.2.7
Date of Issue June 16, 1961

EGCR EXPERIMENTAL LOOPS
CRITERIA

Subject: FUEL CARRIER, CRADLE, AND DOLLY CRITERIA

1.0 General

To provide means for shipment of an irradiated experimental fuel assembly from the EGCR to the reprocessing or examination facility, a large shielded carrier is required. The carrier will be charged by the reactor service machine while the carrier is being held in the fourth floor hatchway by a support cradle. After loading, the carrier will be lowered to a horizontal position on the ground floor, where it will be supported by two dollies. The carrier will now be moved through the equipment airlock and loaded on a truck for transport to the segmenting cell in Bldg. 3026. Here the fuel will be removed from the carrier and loaded into the cell for disassembly.

A complete and detailed study of the entire handling procedure must be made prior to design with particular emphasis on heat removal and handling at the hot cell.

2.0 Carrier

2.1 Description

The carrier consists basically of a primary vessel to contain the 13-ft long fueled portion of the experiment, a secondary cooling and containment system, adequate shielding to protect the handlers and a cut-off mechanism to separate the fuel from the remainder of the experiment. A schematic drawing of the carrier is shown in Fig. 2.1.

2.2 Primary Vessel

This vessel is to provide primary containment of the 13-ft long fuel section of either a small or large experiment after separation from the support structure. The vessel should be closed at the top by a special Bridgman type closure which will be handled by the service machine. The vessel should be either stainless steel or stainless steel clad carbon steel for ease of decontamination.

The fuel will be cooled by radiation and by convection of either air or helium, whichever provides optimum cooling. Natural convection is desirable but forced convection might be necessary to adequately remove the decay heat. The cooling should be designed to remove the decay heat from a 1.5 Mw operating power experiment after 1 week decay time, when the carrier is in either the vertical or horizontal position. This is approximately 19,000 Btu/hr. One hundred psi air and 300 psi helium are available in the EGCR reactor building.

2.3 Secondary System and Vessel

To remove the heat from the primary vessel while insuring double containment of the primary gas, a secondary cooling system is required. The system should be water or some high boiling point liquid circulating by natural convection past the primary vessel and then through finned tubes which extend out of the shield into the ambient air.

The top of the secondary vessel should be designed to mate and seal with the service machine nozzle, and to accept a blind flange which will provide the secondary containment closure.

2.4 Shielding

The carrier must be provided with sufficient shielding to reduce the surface dose rate to 200 mr/hr and the dose rate 1 meter from the surface to 10 mr/hr. For a 1.5 Mw experiment decaying for 1 week, shielding equivalent to 11 in. of lead is required.

The top shield should be part of the top Bridgman closure. All penetrations of the shield should be designed so that streaming will not cause the allowable dose rates to be exceeded.

2.5 Cut-off Tool

To separate the fuel from the support structure, some means must be provided for cutting the support structure just above the incore portion of the experiment. This will be done by a cut-off tool, probably composed of a cutting wheel, drive motor, and positioning fixtures.

The cut-off tool may be either a part of the carrier itself or may be attached to the top of the carrier between the carrier and the service machine. If the tool is to be attached to the top of the carrier, some means of supporting the fuel and then lowering it the remaining distance into the primary vessel must be provided. In either case, the tool must be designed to contain and operate in the atmosphere at which the transfer to the carrier takes place.

2.6 Auxiliary Equipment

Certain auxiliary equipment and services must be provided for on the carrier while it is being loaded and also while it is being transferred to the hot cell. This includes handling lugs for the crane and for the dollies, a supply of compressed air or helium and radiation, pressure and temperature alarms.

2.7 Transfer to Hot Cell

The design of the carrier will be influenced greatly by the special requirements of handling at Bldg. 3026. Such factors as cooling of fuel during transfer to the cell, methods of making primary and secondary containment at hot cell, support of carrier in hot cell charge room and the actual transfer of fuel from carrier to the hot cell, must be considered in the carrier design.

3.0 Cradle

The carrier will be supported in the 10' x 28' fourth floor hatchway by a cradle. The cradle must be designed to support the carrier so that the mating surface of the top carrier closure is 2 1/4-in. below the service machine floor. The cradle legs which carry the load to the service machine floor must be spaced so that the service machine has access to the carrier. The cradle dimensions must be such that the carrier may be lifted from the ground floor to the fourth floor while the cradle is in the hatchway and also such that the cradle will pass through the reactor building equipment airlock. Removable walkways must be provided for personnel access to the top of the carrier while it is in the cradle.

4.0 Dolly

As the carrier is lowered in a vertical position to the ground floor, it must be set down and then rotated to a horizontal position for passage through the equipment airlock. The rotation may be done with the aid of two dollies and four support lugs on the carrier. The crane will lower the carrier until the lower set of lugs are engaged by one of the dollies. Continued lowering of the crane will rotate the carrier until it is horizontal and the support lugs are held by the other dolly. The crane may now be removed, the dollies locked together, and the carrier wheeled through the airlock. The distance from the floor to the highest point of the carrier,when it is on the dollies,must not exceed 9 ft to insure unobstructed passage through the airlock.

The dollies used at the reactor site should also be usable at the hot cell facility. Here the centerline of the carrier must be about 5 ft off the floor since this is the height of the opening in the hot cell charging door through which the fuel will be transferred.

5.0 References

ASME Boiler and Pressure Vessel Code, Section VIII.
Interstate Commerce Commission Tariff Bulletin No. 10.
ORNL Operations Division Memo "ORNL Shielded Containers at ORNL".
ORNL Radiation Safety and Control Training Manual.

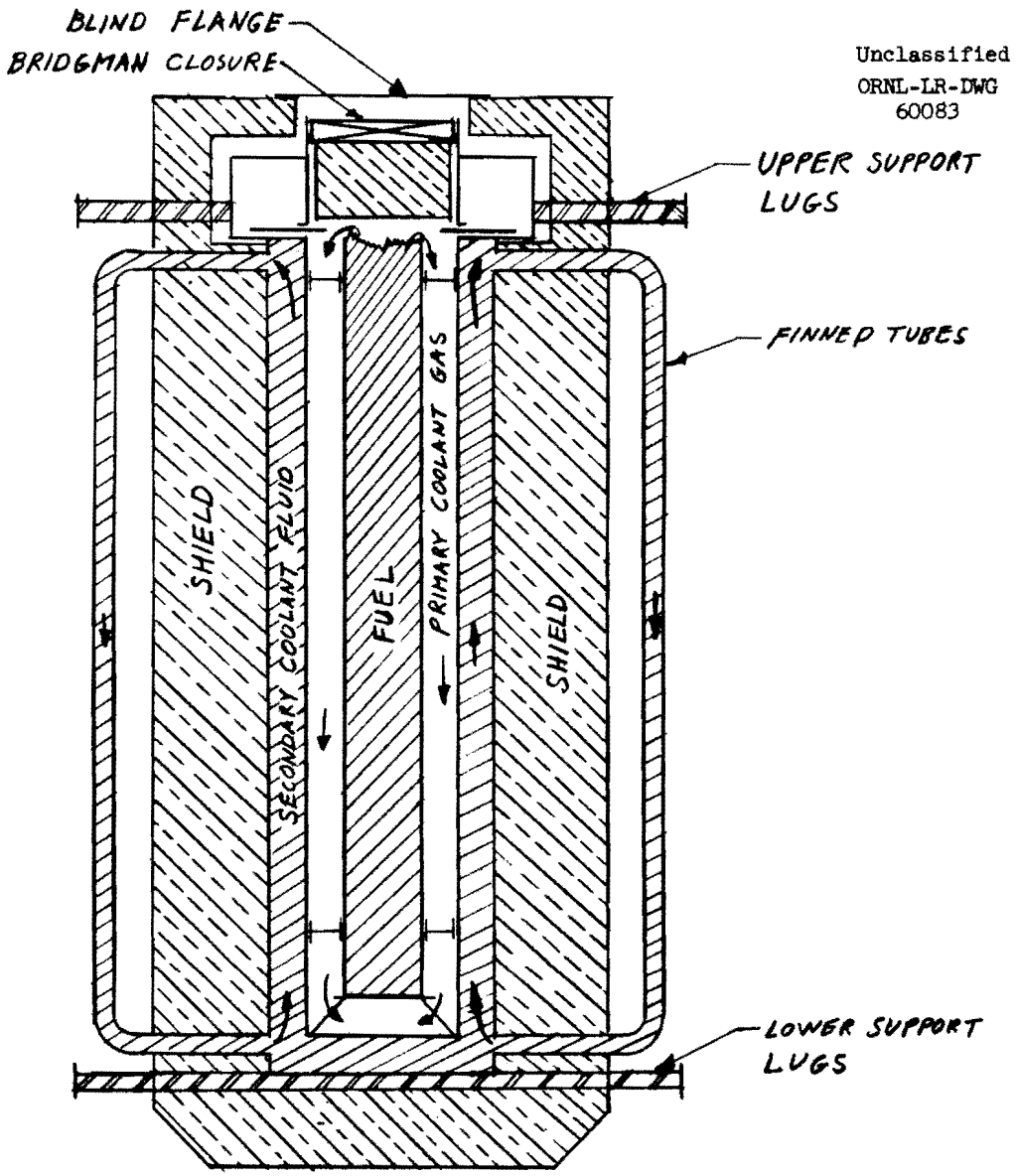

Fig. 2.1. Spent Fuel Carrier.

Code Designation D.4.0
Date of Issue June 7, 1961

EGCR EXPERIMENTAL LOOPS
CRITERIA

Subject: CRITERIA FOR THE EXPERIMENT REMOVAL COOLING SYSTEM

1.0 Function

When removing an experimental assembly (either instrumented or uninstrumented) from the reactor, cooling must be provided:

1. after reactor shutdown and before upward travel of the experimental assembly begins.

2. during upward travel of the experimental assembly into the service machine.

3. while the experimental assembly is contained in the service machine (either connected to the top nozzle or while the service machine is in motion toward the storage hole, etc.)

Each through-tube will be provided with reflective type insulation which will extend approximately between the top nozzle inner tee section and the bottom nozzle inner tee section. That part of the insulation extending from the bottom of the instrumented experimental assembly (experimental stringer, see Experimental Stringer Criteria) to the bottom nozzle tee section will be installed prior to the installation of an instrumented experimental assembly. The remaining part of the insulation extending from the bottom of the instrumented experimental assembly to the top nozzle tee section will be integral with each instrumented experimental assembly and will be removed whenever an experimental stringer is removed. Therefore, no significant radial heat transfer from the experimental stringer through the insulation can be relied upon for cooling during experiment removal. If a cooling method were utilized which relied upon flow up through this cylinder of insulation, down through the annulus between the insulation and the top nozzle inner tee section, and out through the branch of the tee, very high pressure drops would be encountered when the experiment was well on its way into the service machine. This could possibly be tolerated, however, except when the bottom of the experimental stringer came close to lining up with the branch of the tee, more and more flow would bypass the experimental stringer until eventually, there would be no flow past the experimental fuel assembly.

In order to use the experimental loop gas for experiment removal cooling, it is necessary to add a system which will provide flow through the experimental stringer at all times and will block off all significant bypass flow. In order to do this, it is necessary to use the normal

loop gas path immediately after shutdown and until decay heat has fallen to the design value for the system. In addition, it is necessary to use the normal loop gas path during the first few feet of experimental stringer travel since the design of the experimental stringer shield plug prevents flow through the run of the tee (into the service machine) until the shield plug has been lifted a few feet.

The system is being designed for a heat removal rate of 15 kw (1% of 1.5 Mw). It will therefore be necessary to wait until approximately 1.7 hrs after shutdown for decay heat to drop to the design value for the system.

2.0 Description

As shown on the enclosed flow sketch, the system basically consists of a small blower and a small cooler (gas to demineralized water) supported from the service machine plus the necessary piping and valving to provide the various flow paths required.

After reactor shutdown and before appreciable upward travel of the experimental stringer, cooling of the experimental stringer is accomplished by the use of the loop compressors (or the auxiliary blower) and the evaporative cooler. Once the experimental stringer shield plug has been raised sufficiently to permit flow through the top nozzle into the service machine, the flow path is from the service machine through the experiment removal cooler and blower, through the 6-in. line extending through the pipe chase into the cell, back through the main loop piping, upward through the experimental stringer and into the service machine. When the experimental stringer is contained within the service machine, v-4 and v-5 are open and v-1 and v-3 are closed.

The blower, cooler, and valves v-3 through v-5 are supported by the service machine. Connection to the service machine is made through modified blind flanges which can be connected to the top and bottom manholes on the service machine. With the exception of provisions for support for the cooler and blower, no changes to the service machine are required. All equipment connected to the service machine is removable. Connection between the experiment removal blower and the permanent 6-in. piping is made by means of a 6-in. portable pipe section and a bellows (for alignment). The flanged joints in the portable piping will be provided with double seals and leak test connections. Leak testing may be accomplished by pressurizing the volume between the double seals and noting loss of pressure.

The cooler, blower and piping are being sized to permit removal of an experiment even after complete depressurization of the loop.

The requirements of the blower and drive motor have not been firmly established. It is estimated that the blower will have to supply 822 lb/hr at 295 psig. Head, speed, wheel size and power requirements

cannot be established until a preliminary piping layout of the system is made. Since the operating procedures of Section 5.0 require cutting in of the experiment removal blower prior to cutting off the loop compressors, there will be a period of time where the experiment removal blower will be operating under non flow conditions. If the blower selected cannot operate for long periods of time against shutoff without overheating, a bypass line will be run from the discharge of the experiment removal blower to the inlet of the experiment removal cooler.

While the average gas temperature within the service machine is held to 150°F by forced circulation, the actual cooling of an experimental assembly (instrumented or uninstrumented) while contained in the service machine is by free convection. There is no internal piping to guide experiment removal blower flow past an experimental assembly. The system merely maintains a low average temperature in the service machine. The cooling of an experimental assembly is by natural convection up through the insulating sleeve surrounding the experiment, and back down through the service machine outside the insulating sleeve. The experiment removal blower and cooler maintain the cold leg temperature below 150°F (during normal operation of the system).

A plastic boot should be provided for use when the upper sniffer gas region is contaminated. This boot should be designed for connection between the reactor top nozzle and the service machine expansion joint. It should be provided with gloves and sufficient space for the blind flange, bolts, a wrench, etc. In the operations involved, the boot will never see a pressure higher or lower than atmospheric. When removing the boot, it should be pinched off both at the service machine nozzle and at the top nozzle to contain as much of the radioactive gas as possible.

The main variables which will be measured are: experiment removal blower flow, service machine temperature and pressure, various loop temperatures and loop pressure, sniffer gas pressure, experiment removal cooler temperatures and demineralized water flow, cell pressure, radiation level at various points, etc. No direct measurement of experiment temperature or gas flow will be available during experiment removal. The instrumentation readout for this system should be at the service machine operating console. Duplicate experimental loop instruments will be needed at the console in some cases.

In the event that either of the He-CO_2 experimenters' cells should be open to atmosphere during experiment removal, only single containment would be provided for gas in the in-cell, 6-in. piping upstream of v-1. In order to provide secondary containment at all times, both cells must remain closed while the 6-in. header is pressurized.

In view of the possible serious consequences of failure of the experiment removal cooling system during experiment removal, consideration will be given to duplication of much of the equipment in the system. Since

failure of either the experiment removal blower or cooler could result in meltdown of the experiment if no backup cooling method were provided, it may prove necessary to duplicate the entire cooling loop suspended from the service machine. Credibility of failure of the alignment bellows will be investigated. In addition, the credibility of failure of a single component within the service machine resulting in meltdown will be investigated. The system shown in the enclosed flow sketch is intended to provide the guidelines for system design, not a detailed piping schematic.

Failure of the experiment removal cooler between the gas and water sides could result in dumping the demineralized water from the head tank through the failed cooler and into the service machine. If the service machine valve (v-10) was open at the time, demineralized water would enter the through-tube and possibly cause its failure to the reactor gas region. In order to avoid the possibility of dumping an unlimited amount of water into the reactor and producing a serious reactivity change, all sources of make-up water to the experimenters' head tank should be cut off prior to beginning experiment removal operations and should not be cut back on until experiment removal operations have been completed (top nozzle blind flange in place). Two sources of makeup water to the head tank are provided: condensate from the EGCR steam plant, and emergency cooling water. Condensate should be cut off by closing manual valve 1 in. V-K-89 on AC Dwg. P-134. Emergency cooling water should be cut off by closing manual valve v-36 in the Process Water Cooling System (see Criteria for the Loop Cooling Water System). With no makeup water supplied to the demineralized water system, all the water contained in the system could be dumped into the reactor vessel without the water level reaching the bottom of the core.

3.0 Uninstrumented Experimental Assembly

The service machine as designed is incapable of removing an instrumented experimental assembly from the EGCR loops if it is of sufficient length to utilize the entire active core length. The lower 4 ft of active core below the instrumented assembly may be used for uninstrumented experimental assemblies. Uninstrumented experimental assemblies may be used to preheat the gas entering the instrumented experimental assemblies. The uninstrumented experimental assembly will consist of a fueled section (uninstrumented fuel assembly) extending through the lower 4 ft of moderator, a support spider extending from the fueled section to a point below the reflector region, and insulation which will be integral with the uninstrumented experimental assembly. Support for the uninstrumented experimental assembly will be from a shoulder on the inside of the through-tube. The uninstrumented experimental assembly will be removed as a unit (including insulation and support) each time an instrumented experimental assembly is removed.

Since many experiments will not require the use of an uninstrumented experimental assembly to obtain the desired results, the procedures

involved in the removal of an uninstrumented experimental assembly will be treated separately in Section 5.2. The majority of operating procedures (Section 5.1) described will be confined to normal and emergency removal of an instrumented experimental assembly when an uninstrumented experimental assembly has not been installed in the through-tube.

4.0 Restrictions on System Design

A large number of restrictions have been placed on the design of this system. Among the conditions imposed on the design of the system are:

a. Changes to the service machine resulting from the addition of this system should be kept to an absolute minimum. It is not anticipated that any internal change to the service machine is required. The only external changes called for are the addition of supports for the cooler and blower.

b. The service machine should not be operated with gas temperatures greater than 150°F. Under normal conditions the temperature inside the service machine will not exceed 150°F. Under emergency conditions where the loop piping has failed and the loop has depressurized, it may not be feasible to limit service machine temperature to 150°F. For emergency conditions (operation at atmospheric pressure) the size of the blower and the heat exchanger might become prohibitive if the 150°F limit must be met.

c. No remotely operated 6 in. valves are permitted in the main loop piping. Under the proposed system, none are required.

d. If possible, reversal of flow through the experiment should be avoided. Reversal of flow involves a period of no flow. If a blower were lost during this period, meltdown would be possible. In the present method, flow reversal is not used. While the flow path is changed twice, in each case the new flow path is cut in before the previous flow path is shut off.

e. The system should be capable of cooling an experiment with the loop depressurized to atmospheric pressure. The blower and the lines are being sized to handle atmospheric pressure conditions.

f. Contamination of the service machine should be minimized. Any method which does not involve reverse flow has the disadvantage of providing flow past the experiment and directly into the service machine without first passing through the filter or any other purification equipment. It is necessary therefore to clean up the loop as much as possible prior to opening up the service machine.

g. Access to the cell should be assumed impossible since many possible failures or leaks could result in release of radioactive loop gas to the cell. Since the system is being designed to handle instrumented and uninstrumented experimental assemblies for depressurized (failed) as well as normal loop conditions, no procedures should involve entrance into the cell until after the experiment assembly has been removed and cleanup has been completed.

h. It is not necessary to provide two barriers (double containment) of loop gas from operators within the reactor containment vessel during experimental assembly removal. Double containment to the outside atmosphere is required at all times. The design of the service machine is such that double containment is not provided. If any weak points within the system can be identified where the likelihood of failure is significant, double containment should be provided. The use of such items as long trailing metal hoses should be avoided. In the proposed system no hoses containing gas are involved.

i. Since the internal volume of the service machine is of the order of 10 times the internal volume of a loop, large amounts of gas will be required for experiment removal. Since there are no facilities for filling the service machine with CO_2 and no facilities for purification of dirty CO_2, loops containing CO_2 should be replaced with helium prior to experiment removal. Helium required for service machine fill should be obtained from the EGCR helium supply and should be processed by EGCR systems for repeated use.

j. If long runs of large diameter piping are involved, the system should be designed to provide mostly cold lines to reduce stress problems. In the proposed system, all of the 6 in. piping run contains gas at less than 150°F under normal conditions. Under conditions of main loop failure, the line from the service machine through v-4 to the cooler will possibly operate at greater than 150°F; all other lines will see less than 150°F.

k. The system should be designed to minimize the amount of piping and equipment which should be installed now. As shown on the enclosed sketch, none of the equipment or piping must be installed initially. The 6 in. line will be installed in spare chases, the penetration into the cell may be installed later, etc.

5.0 Operation

5.1 Removal of Instrumented Experimental Assemblies

The following sections outline the steps necessary for the removal of an instrumented experimental assembly (when no uninstrumented

experimental assembly is in the through-tube) from the reactor into the service machine to the point where the service machine is uncoupled from the nozzle and free to move toward a storage hole or a cask in an open hatch. Four conditions are covered, each of these for both the helium and CO_2 operating conditions. The conditions covered are:

I. Normal operation. No failure resulting in depressurization of the loop.

II. Experiment removal after failure of main loop piping to the cell atmosphere. It is assumed that either a piping or component failure has taken place within the cell resulting in depressurization of the loop.

III. Experiment removal after failure of main loop piping to the upper sniffer gas region (sniffer gas rupture disc intact). It is assumed in this case that the loop operating pressure before failure was not sufficiently high to cause failure of the sniffer gas rupture disc. The combination of the large volume between the main loop piping and the secondary containment piping and the drop in pressure resulting from cooldown of the gas results in a pressure of less than 450 psia.

IV. Experiment removal after failure of main loop piping to the upper sniffer gas region (sniffer gas rupture disc failed). In this case it is assumed that the combination of high initial loop operating pressure small amount of cooldown of the gas results in a pressure of greater than 450 psia. Sequential failure of the main loop piping and the rupture disc results in a common volume consisting of the loop piping, the sniffer gas region and the cell volume.

It is assumed in each of the following procedures that a dummy shield plug has previously been inserted in the service machine and is supported by the replacement shield plug installation tool (turret position 3).

Since only one gas transfer pump is provided per loop and the transfer pump could fail during experiment removal, the procedures as outlined do not assume the availability of a transfer pump. The procedures may be simplified and the amount of gas wasted may be greatly reduced with the use of the transfer pump and the gas storage tank. It is assumed in each case that the gas may be radioactive. Clean loop operating procedures would be much simpler than the following. No attempt is made to cover all the wide variety of failures after which experiment removal would be required. The following are intended to be typical.

5.1.1 Normal Operation

I. Experiment Removal - CO_2 Loop Operation - No Loop Failure

1. Shut down the reactor.

2. Continue cooling of the experiment by use of the loop compressors and the evaporative cooler until the decay heat has dropped to the system design value. For a 1.5 Mw experiment this should require less than 2 hrs.

3. Clean up the loop gas (if necessary) as much as possible by use of the Loop Purification System and by reducing total loop gas mass by discharging to the gas storage tanks and then through the Loop Off-Gas System. This is necessary in order to minimize service machine contamination. Loop pressure should be reduced to less than 295 psig whether or not this is required for cleanup. In order to minimize the amount of helium wasted in replacing CO_2 with helium, loop gas pressure should be reduced to as low a value as possible without exceeding the design experiment outlet temperature.

4. Clean up the sniffer gas region (if necessary) by evacuation to the Loop Off-Gas System through v-6. This might be necessary in order to permit manual removal of the blind flange and to minimize service machine contamination. Bring the sniffer gas region to atmospheric pressure by opening v-8, then close v-8.

5. Remove the top nozzle blind flange by hand. Remove the instrument leads which connect between Bridgman closure connector and the four connectors in the top nozzle outer tee section.

6. Position the service machine above the top nozzle, extend the service machine expansion joint, and bolt the mating flanges together by hand.

7. Leak test the flanged joint between the tee section and the service machine expansion joint. Leak testing may be accomplished by pressurizing the volume between the two o-rings and noting loss of pressure. A test connection is provided at this

point as shown on A-C Dwg. No. 5927-EGCR-PS-61. Lower the service machine nozzle shielding around the service machine nozzle.

8. Connect and leak test the portable pipe section and bellows between the permanent system piping and the service machine.

9. Equalize the pressures on either side of v-10 by use of the service machine valve bypass line (line NH-620A - 1 1/2-in. -8 on A-C Dwg. No. 5927-EGCR-PS-61) then shut the bypass valve. Open the service machine valve, v-10. It should be noted that the service machine valve, v-10, cannot be opened when there is any significant differential pressure across the valve. Draw a vacuum on the service machine, expansion joint volume and the sniffer region by means of the EGCR vacuum pump (through v-9).

10. Bring the service machine, expansion joint volume and sniffer gas region to the reduced loop pressure (less than or equal to 295 psig) with helium from the EGCR Helium Transfer System (through v-9).

11. Open v-1, v-3 and v-5 and raise loop, sniffer region and service machine pressures to 295 psig with helium from the EGCR Helium Transfer System. Since the reactor was in operation prior to beginning experiment removal operations, the 3-way valve in the Sniffer Gas System (v-11) will have been previously positioned to provide relief of sniffer gas into the cell. Bleed off the mixture (largely helium, some CO_2) to the Loop Off-Gas System and repressurize to 295 psig until the CO_2 concentration is less than *____ ppm by volume. Determine the CO_2 concentration by use of a continuous gas chromatograph column connected to the sampling system. Close v-5.

12. Unlock the Bridgman closure with the nozzle closure tool. Retract the nozzle closure tool into the service machine. Close v-10. Mechanically it is necessary to close v-10 prior to rotating the service machine turret.

13. Rotate the service machine turret to turret position 2. Equalize the pressures on either side of v-10 by use of the service machine valve bypass line then shut the bypass valve. Open v-10. Connect the experiment handling tool to the experimental assembly.

*The permissible CO_2 concentration will be specified when data are obtained (by literature search and/or test) on viscosity and thermal conductivity of helium-CO_2 mixtures.

14. Close the manual valves in the makeup water lines to the experimenters' head tank (see Section 2.0 for a discussion of the hazard involved in leaving these lines open). Connect the demineralized water hoses to the experiment removal cooler, open v-4, and place the experiment removal blower and cooler in operation. The main loop compressors and the experiment removal blower are now operating in parallel but the experiment removal blower is passing no flow since the experimental assembly shield plug is blocking flow into the service machine.

15. Begin lifting the experimental assembly. Loop compressor flow through the experimental assembly will decrease as the experiment is lifted since flow must pass up through the experiment, down through an annulus between the experiment support tube (see ORNL Dwg. E-SK-JTC-1-30-61) and the top nozzle inner tee section, and out through the branch of the inner tee. The length of the annulus increases steadily as the experiment is lifted. When the bottom of the shield plug passes the reducer in the top nozzle tee section, flow into the service machine via the experiment removal blower will begin.

16. When sufficient experiment removal blower flow has been established, gradually cut off loop compressor flow. Observe service machine temperature as well as experiment removal blower flow to assure adequate cooling.

17. Continue lifting the experimental assembly into the service machine until the experiment handling tool has reached the upper limit of its travel. Open v-5. Close v-1 and v-3.

18. Close v-10 and rotate the service machine to turret position 3. Equalize the pressures on either side of v-10 by use of the service machine valve bypass line then shut the bypass valve. Open v-10 and insert the dummy shield plug with the replacement shield plug installation tool.

19. Retract the replacement shield plug installation tool, close v-10 and rotate the service machine turret to turret position 1. Equalize the pressures on either side of v-10 by use of the service machine valve bypass line then shut the bypass valve. Open v-10 and lock the Bridgman closure with the nozzle closure tool.

20. Retract the nozzle closure tool and close the service machine valve, v-10.

21. Bleed down the experimental loop to the gas storage tanks.

22. Complete the depressurization of the loop with the Loop Off-Gas System and evacuate with the vacuum pump.

23. Evacuate the sniffer gas region with the Loop Off-Gas System vacuum pump, then admit clean air through v-8 and close v-8. Simultaneously with steps 24 through 26 the Loop Off-Gas System should be used to dispose of the gas in the gas storage tanks. This will permit entrance of the cell for refill of the loop with clean gas.

24. Raise the shielding from around the service machine nozzle. Unbolt the service machine. Remove the portable pipe section and bellows.

25. Move the service machine clear of the top nozzle tee section and replace the blind flange by hand.

26. Leak test the blind flange. Open the manual valves in the makeup water lines to the experimenters' head tank.

27. Enter the cell and admit clean gas to the experimental loop by use of the Through-Tube Pressurizer and Loop Fill System.

28. Repressurize the sniffer gas region through the air charging connection.

Experiment Removal - He Loop Operation - No Loop Failure
The procedure for removal of an experimental assembly from a loop operating with helium as a coolant are identical except that in step 11 the following should be deleted:

"Bleed off the mixture .... sampling system".

5.1.2 Emergency Operation

II. Experiment Removal After Failure of Main Loop Piping to Cell Atmosphere - CO_2 Loop Operation

1. The reactor will have scrammed or been shut down on loss of loop pressure.

2. Continue cooling of the experiment by use of the loop compressors (if they are still operative) and the evaporative cooler until the decay heat has dropped to the system design value. If the loop compressors have failed, use the auxiliary blower.

3. Clean up the loop gas (if necessary) as much as possible by use of the Loop Purification System. This may be necessary in order to minimize service machine contamination.

4. Clean up the sniffer gas region (if necessary) by evacuation to the Loop Off-Gas System through v-6. This might be necessary in order to permit manual removal of the blind flange and to minimize service machine contamination. Bring the sniffer region to atmospheric pressure by opening v-8, then close v-8.

5. Remove the blind flange by hand. Remove the instrument leads which connect between the Bridgman closure connector and the four connectors in the top nozzle outer tee section.

6. Position the service machine above the top nozzle, extend the service machine expansion joint and bolt the mating flanges together by hand.

7. Leak test the flanged joint between the tee section and the service machine expansion joint. Leak testing may be accomplished by pressurizing the volume between the two o-rings and noting loss of pressure. Lower the service machine nozzle shielding around the service machine nozzle.

8. Connect and leak test the portable pipe section and bellows between the permanent system piping and the service machine.

9. Equalize the pressures on either sides of v-10 by use of the service machine valve bypass line (line HN-620A - 1 1/2-in. -8 on A-C Dwg. No. 5927-EGCR-PS-61) then shut the bypass valve. Open the service machine valve, v-10. It should be noted that the service machine valve, v-10, cannot be opened when there is any significant differential pressure across the valve. Draw a vacuum on the service machine and the sniffer region by means of the EGCR vacuum pump (through v-9).

10. Bring the service machine to atmospheric pressure with helium from the EGCR Helium Transfer System (through v-9).

11. Open v-1, v-3 and v-5. Since the reactor was in operation prior to beginning experiment removal operations, the 3-way valve in the Sniffer Gas System (v-11) will have been previously positioned to provide relief of sniffer gas into the cell. Two cases will be covered. For the case of a relatively large leak to the cell, it will not be possible to use "feed and bleed" of helium into the CO_2 loop to replace the CO_2 with helium. Since the ventilation system bypass valve may be closed (the cell may be sealed due to high radiation level), the Loop Off-Gas System should be used to dispose of gas which passes through the point of leakage into the cell. The Loop Off-Gas System is provided with a direct intake from the cell atmosphere. Continuous dilution of loop gas by the addition of helium from the EGCR Helium Transfer System should be continued until the CO_2 concentration is less than *___ ppm by volume. If the rate of leakage of gas from the loop to the cell is so large as to raise cell pressure above atmospheric pressure, cut off flow from the EGCR Helium Transfer System until the Off-Gas System reduces cell pressure to atmospheric. This is necessary to prevent failure of the cell rupture disc into the reactor containment. Determine the CO_2 concentration by use of a continuous gas chromatograph column connected to the sampling system. Close v-5.

    For the case of a relatively small leak to the cell, feed and bleed at pressures up to 295 psig may be used to replace the CO_2 with helium. Small and large are distinghished in this case as the difference between a leak which might take more or less than a few hours to depressurize by leakage from normal loop operating pressures.

12. Unlock the Bridgman closure with the nozzle closure tool. Retract the nozzle closure tool into the service machine. Close v-10. Mechanically it is necessary to close v-10 prior to rotating the service machine turret.

13. Rotate the service machine turret to turret position 2. Equalize the pressures on either side of v-10 by use of the service machine valve bypass line (line NH-620A - 1 1/2-in. -8 on A-C Dwg. No. 5927-EGCR-PS-61) then shut the bypass valve. Open v-10.

---

*See page 10.

Connect the experiment handling tool to the experimental assembly.

14. Close the manual valves in the makeup water lines to the experimenters' head tank. Connect the demineralized water hoses to the experiment removal cooler, open v-4, and place the experiment removal blower and cooler in operation. The loop compressors and the experiment removal blower are now operating in parallel but the experiment removal blower is passing no flow since the experimental assembly shield plug is blocking flow into the service machine.

15. Begin lifting the experimental assembly. Loop compressor flow through the experimental assembly will decrease as the experiment is lifted since flow must pass up through the experiment, down through an annulus between the experiment support tube (see ORNL Dwg. E-SK-JTC 1-30-61) and the top nozzle inner tee section, and out through the branch of the inner tee. The length of the annulus increases steadily as the experiment is lifted. When the bottom of the shield plug passes the reducer in the top nozzle tee section, flow into the service machine via the experiment removal blower will begin.

16. When sufficient experiment removal blower flow has been established, gradually cut off loop compressor flow. Observe service machine temperature as well as experiment removal blower flow to assure adequate cooling.

17. Continue lifting the experimental assembly into the service machine until the experiment handling tool has reached the upper limit of its travel. Open v-5. Close v-1 and v-3.

18. Close v-10 and rotate the service machine to turret position 3. Equalize the pressures on either side of v-10 by use of the service machine valve bypass line. Open v-10, and insert the dummy shield plug with the replacement shield plug installation tool.

19. Retract the replacement shield plug installation tool, close v-10 and rotate the service machine turret to turret position 1. Equalize the pressures on either side of v-10 by use of the service machine valve bypass line. Open v-10 and lock the Bridgman closure with the nozzle closure tool.

20. Retract the nozzle closure tool and close the service machine valve, v-10.

21. Increase the service machine pressure to 295 psig with helium from the EGCR Helium Transfer System.

22. If the leak is small enough to allow drawing a vacuum, use the Loop Off-Gas System to evacuate the loop piping. Cell ambient air will bleed back into the loop piping. Even for the case of a large leak the vacuum pump may be used to replace loop gas with relatively clean cell ambient air by continuous dilution.

23. Evacuate the sniffer gas region with the Loop Off-Gas System vacuum pump, then admit clean air through v-8 and close v-8. Simultaneously with steps 24 through 26 clean up the cell ambient air by use of the Loop Off-Gas System. Clean air will be admitted to the cell through the Ventilation System bypass check valves.

24. Raise the shielding from around the service machine nozzle. Unbolt the service machine. Remove the portable pipe section and bellows.

25. Move the service machine clear of the top nozzle tee section and replace the blind flange by hand.

26. Leak test the blind flange. Open the manual valves in the makeup water lines to the experimenters' head tank.

27. The cell may now be entered for repair.

28. Repressurize the sniffer gas region through the air charging connection.

<u>Experiment removal after failure of main loop piping to cell atmosphere - He Loop Operation</u>

The procedures for removal of an experimental assembly from a loop operating with helium as a coolant are identical except for step 11. There is no need to use either feed and bleed or continuous dilution to change loop gas.

III. Experiment Removal After Failure of Main Loop Piping to the Upper Sniffer Gas Region (Sniffer Gas Rupture Disc Intact) - CO_2 Loop Operation

1. The reactor will have scrammed or been shut down

on loss of loop pressure, or an AMDRI would have occurred on high sniffer pressure.

2. Continue cooling of the experiment by use of the loop compressors (if they are still operative) and the evaporative cooler until the decay heat has dropped to the system design value. If the loop compressors have failed, use the auxiliary blower.

3. Clean up the loop gas as much as possible by use of the Loop Purification System. This is necessary in order to minimize service machine contamination.

4. Since the loop and sniffer regions will be at a common pressure for a large leak, and since it is intended that helium rather than air be used to replace CO_2 during experiment removal, the sniffer gas region should be cleaned up by alternate bleed through v-6 to the Loop Off-Gas System and feed of clean helium from the Loop Helium Supply System through v-12. This procedure will help minimize service machine contamination. An additional precaution (step 6) will be necessary to permit safe removal of the blind flange.

5. Gradually reduce loop pressure taking care that experiment design outlet temperature is not exceeded.

6. When the loop pressure has been dropped to atmospheric pressure, position the service machine above the top nozzle and attach the plastic boot between the service machine expansion joint and the top nozzle. Steps 7 and 8 are then accomplished by working through the plastic boot.

7. Remove the blind flange by hand. Remove the instrument leads which connect between the Bridgman closure connector and the four connectors in the top nozzle outer tee section.

8. Extend the service machine expansion joint and bolt the mating flanges together by hand.

9. Remove the boot, leak test the flanged joint between the tee section and the service machine expansion joint. Leak testing may be accomplished by pressurizing the volume between the two o-rings and noting loss of pressure. Lower the service machine nozzle shielding around the service machine nozzle.

10. Connect and leak test the portable pipe section and bellows between the permanent system piping and the service machine.

11. Draw a vacuum on the service machine by means of the EGCR vacuum pump (through v-9).

12. Bring the service machine to loop pressure with helium from the EGCR Helium Transfer System (through v-9). If loop pressure is greater than 295 psig, depressurize to 295 psig prior to increasing service machine pressure. If the leak rate between the loop piping and the sniffer regions is not great enough to equalize pressure rapidly, adjust sniffer gas pressure to be equal to loop gas pressure (also service machine pressure) by the addition of clean helium from the loop Helium Supply System through v-12.

13. Open v-1, v-3 and v-5. Equalize the pressures on either side of v-10 by use of the service machine valve bypass line. Open v-10. It should be noted that the service machine valve, v-10, cannot be opened when there is any significant differential pressure across the valve. Since the reactor was in operation prior to beginning experiment removal operations, the 3-way valve in the Sniffer Gas System (v-11) will have been previously positioned to provide relief of sniffer gas into the cell.

14. Replace the CO_2 in the loop with helium by feed of helium from the EGCR Helium Transfer System and bleed of loop gas to the Loop Off-Gas System via the gas storage tanks. Feed and bleed of loop gas should be continued until the CO_2 concentration is less than * ppm by volume. Determine the CO_2 concentration by use of a continuous gas chromatograph column connected to the sampling system. Close v-5.

15. Unlock the Bridgman closure with the nozzle closure tool. Retract the nozzle closure tool into the service machine. Close v-10. Mechanically it is necessary to close v-10 prior to rotating the service machine turret.

16. Rotate the service machine turret to turret position 2. Equalize the pressures on either side of v-10 by use of the service machine valve bypass line. Open v-10. Connect the experiment handling tool to the experimental assembly.

---

*See page 10.

17. Close the manual valves in the makeup water lines to the experimenters' head tank. Connect the demineralized water hoses to the experiment removal cooler, open v-4, and place the experiment removal blower and cooler in operation. The loop compressors and the experiment removal blower are now operating in parallel but the experiment removal blower is passing no flow since the experimental assembly shield plug is blocking flow into the service machine.

18. Begin lifting the experimental assembly. Loop compressor flow through the experimental assembly will decrease as the experiment is lifted since flow must pass up through the experiment, down through an annulus between the experiment support tube (see ORNL Dwg. E-SK-JTC 1-30-61) and the top nozzle inner tee section, and out through the branch of the inner tee. The length of the annulus increases steadily as the experiment is lifted. When the bottom of the shield plug passes the reducer in the top nozzle tee section, flow into the service machine via the experiment removal blower will begin.

19. When sufficient experiment removal blower flow has been established gradually, cut off loop compressor flow. Observe service machine temperature as well as experiment removal blower flow to assure adequate cooling.

20. Continue lifting the experimental assembly into the service machine until the experiment handling tool has reached the upper limit of its travel. Open v-5. Close v-1 and v-3.

21. Close v-10 and rotate the service machine to turret position 3. Equalize the pressures on either side of v-10 by use of the service machine valve bypass line then shut the bypass valve. Open v-10, and insert the dummy shield plug with the replacement shield plug installation tool.

22. Retract the replacement shield plug installation tool, close v-10 and rotate the service machine turret to turret position 1. Equalize the pressures on either side of v-10 by use of the service machine valve bypass line then shut the bypass valve. Open v-10 and lock the Bridgman closure with the nozzle closure tool.

23. Retract the nozzle closure tool and close the service machine valve, v-10.

24. Increase the service machine pressure to 295 psig with helium from the EGCR Helium Transfer System.

25. Evacuate the loop piping and the sniffer gas region by use of the Loop Off-Gas System via the gas storage tanks.

26. Admit clean air to the loop piping and the sniffer gas region through v-8 and close v-8.

27. Raise the shielding from around the service machine nozzle. Unbolt the service machine by working through the plastic boot. Remove the portable pipe section and bellows.

28. Replace the blind flange by hand and remove the plastic boot. Move the service machine clear of the top nozzle tee section.

29. Leak test the blind flange.

30. Open the manual valves in the makeup water lines to the experimenters' head tank.

<u>Experiment removal after failure of main loop piping to the upper sniffer gas region (sniffer gas rupture disc intact) - He Loop Operation</u>

The procedures for removal of an experimental assembly from a loop operating with helium as a coolant are identical except for steps 4 and 14. The words "and since it ... during experiment removal" should be deleted from step 4, and step 14 should be deleted entirely.

IV. Experiment Removal After Failure of Main Loop Piping to the Upper Sniffer Gas Region (Sniffer Gas Rupture Disc Failed) - CO_2 Loop Operation

1. The reactor will have scrammed or been shut down on loss of loop pressure or an AMDRI would have occurred on high sniffer pressure.

2. Continue cooling of the experiment by use of the loop compressors (if they are still operative) and the evaporative cooler until the decay heat has dropped to the system design value. If the loop compressors have failed, use the auxiliary blower.

3. By definition of the failure, the loop, the sniffer gas region and the experimenters' cell are now a common volume if the leak between the loop and sniffer gas region is severe. Clean up the loop gas (if necessary) as much as possible by use of the Loop Purification System. Cleanup of loop gas by feed and bleed is not practical since an appreciable increase in loop gas pressure above atmospheric pressure is followed by the same increase in cell pressure. If the pressure were permitted to rise too high, the cell rupture disc might fail into the reactor containment vessel. Evacuation of the loop (by means of the Loop Off-Gas System vacuum pump) may be attempted since it tends to draw a vacuum on the cell through the leak except that the Cell Ventilation System bypass check valves admit clean air to the cell through the leak and into the loop. Since there is no line to the top nozzle outer tee section where clean gas can be admitted to purge the sniffer gas region, either dirty sniffer gas (if present) must be tolerated at this state of experiment removal, or an opening may be made through the top nozzle blind flange for admitting purge gas by working through a plastic boot.

4. Clean up the cell ambient air by use of the Loop Off-Gas System. Clean air will be admitted to the cell through the Cell Ventilation System bypass check valves.

5. Position the service machine above the top nozzle and attach the boot between the service machine expansion joint and the top nozzle. Operations 6 and 7 are accomplished by working through the plastic boot.

6. Remove the blind flange by hand. Remove the instrument leads which connect between the Bridgman closure connector and the four connectors in the top nozzle outer tee section.

7. Extend the service machine expansion joint and bolt the mating flanges together by hand.

8. Leak test the flanged joint between the tee section and the service machine expansion joint. Leak testing may be accomplished by pressurizing the volume between the two o-rings and noting loss of pressure. Lower the service machine nozzle shielding around the service machine nozzle.

9. Connect and leak test the portable pipe section and bellows between the permanent system piping and the service machine.

10. Draw a vacuum on the service machine by means of the EGCR vacuum pump (through v-9).

11. Bring the service machine to atmospheric pressure with helium from the EGCR Helium Transfer System (through v-9).

12. Open v-1, v-3 and v-5. Since the reactor was in operation prior to beginning experiment removal operations, the 3-way valve in the Sniffer Gas System (v-11) will have been previously positioned to provide relief of sniffer gas into the cell.

13. Replace the carbon dioxide in the loop with helium by continuous dilution of loop gas. Helium should be taken from the EGCR Helium Transfer System and the loop gas should be discarded to the Loop Off-Gas System. Dilution should be continued until the CO_2 concentration is less than *____ppm by volume. Determine the CO_2 concentration by use of a continuous gas chromatograph column connected to the sampling system. Close v-5.

14. Equalize the pressures on either side of v-10 by use of the service machine valve bypass line (line NH-620A - 1 1/2-in.-8 on A-C Dwg. No. 5927-EGCR-PS-61) then shut the bypass valve. Open the service machine valve, v-10, and unlock the Bridgman closure with the nozzle closure tool. It should be noted that the service machine valve, v-10, cannot be opened when there is any significant differential pressure across the valve. Retract the nozzle closure tool into the service machine. Close v-10. Mechanically it is necessary to close v-10 prior to rotating the service machine turret.

15. Rotate the service machine turret to turret position 2. Equalize the pressures on either side of v-10 by use of the service machine valve bypass line then shut the bypass valve. Open v-10. Connect the experiment handling tool to the experimental assembly.

16. Close the manual valves in the makeup water lines to the experimenters' head tank. Connect the demineralized water hoses to the experiment removal cooler, open v-4

---

*See page 10.

and place the experiment removal blower and cooler in operation. The loop compressors and the experiment removal blower are now operating in parallel but the experiment removal blower is passing no flow since the experimental assembly shield plug is blocking flow into the service machine.

17. Begin lifting the experimental assembly. Loop compressor flow through the experimental assembly will decrease as the experiment is lifted since flow must pass up through the experiment, down through an annulus between the experiment support tube and the top nozzle inner tee section, and out through the branch of the inner tee. The length of the annulus increases steadily as the experiment is lifted. When the bottom of the shield plug passes the reducer in the top nozzle tee section, flow into the service machine via the experiment removal blower will begin.

18. When sufficient experiment removal blower flow has been established, gradually cut off loop compressor flow. Observe service machine temperature as well as experiment removal blower flow to assure adequate cooling.

19. Continue lifting the experimental assembly into the service machine until the experiment handling tool has reached the upper limit of its travel. Open v-5. Close v-1 and v-3.

20. Close v-10 and rotate the service machine to turret position 3. Equalize the pressures on either side of v-10 by use of the service machine valve bypass line. Open v-10, and insert the dummy shield plug with the replacement shield plug installation tool.

21. Retract the replacement shield plug installation tool, close v-10 and rotate the service machine turret to turret position 1. Equalize the pressures on either side of v-10 by use of the service machine valve bypass line. Open v-10 and lock the Bridgman closure with the nozzle closure tool.

22. Retract the nozzle closure tool and close the service machine valve, v-10.

23. Increase the service machine pressure to 295 psig with helium from the EGCR Helium Transfer System.

24. Repeat the loop and cell cleanup procedures if required for repairs.

25. Raise the shielding from around the service machine nozzle.

26. Attach the boot between the service machine expansion joint and the top nozzle.

27. Unbolt the service machine. Remove the portable pipe section and bellows.

28. Retract the service machine expansion joint and replace the top nozzle blind flange by hand.

29. Remove the boot and leak test the blind flange.

30. Open the manual valves in the makeup water lines to the experimenters head tank.

Experiment removal after failure of main loop piping to the upper sniffer gas region (sniffer gas rupture disc failed) - He loop operation

The procedure for removal of an experimental assembly from a loop operating with helium as a coolant is identical except for step 13. Replacement of CO_2 in the loop with helium is not applicable.

5.2 Removal of Experimental Assemblies Containing Both Instrumented and Uninstrumented Sections

The following procedure describes the steps necessary for the removal of an experiment containing both instrumented and uninstrumented sections. It is assumed that no failure of piping or components has occurred which would result in depressurization. It is further assumed that the coolant in use at the time is CO_2. The modifications to operating procedure required for emergency operation and for He operation may be obtained by comparison with Section 5.1.

1. Shut down the reactor.

2. Continue cooling of the instrumented and uninstrumented experimental assemblies by use of the loop compressors and the evaporative cooler until the decay heat has dropped to the system design value. For a total of 1.5 Mw in the instrumented and uninstrumented sections, the required time should be less than 2 hrs.

3. Clean up the loop gas (if necessary) as much as possible by use of the Loop Purification System and by reducing total loop gas mass by discharging to the gas storage tanks and then through the Loop Off-Gas System. Loop pressure should be reduced to less than 295 psig whether or not this is required for cleanup. In order to minimize the amount of helium wasted in replacing CO_2 with helium, loop gas pressure should be reduced to as low a value as possible without exceeding the design experiment outlet temperature.

4. Clean up the sniffer gas region (if necessary) by evacuation to the Loop Off-Gas System through v-6. This might be necessary in order to permit manual removal of the blind flange and to minimize service machine contamination. Bring the sniffer gas region to atmospheric pressure by opening v-8, then close v-8.

5. Remove the top nozzle blind flange by hand. Remove the instrument leads which connect between the Bridgman closure connector and the four connectors in the top nozzle outer tee section.

6. Position the service machine above the top nozzle, extend the service machine expansion joint, and bolt the mating flanges together by hand.

7. Leak test the flanged joint between the tee section and the service machine expansion joint. Leak testing may be accomplished by pressurizing the volume between the two o-rings and noting loss of pressure. Lower the service machine nozzle shielding around the service machine nozzle.

8. Connect and leak test the portable pipe section and bellows between the permanent system piping and the service machine.

9. Equalize the pressures on either side of v-10 by use of the service machine valve bypass line (line NH-620A - 1 1/2-in.-8 on A-C Dwg. No. 5927-EGCR-PS-61) then shut the bypass valve. Open the service machine valve, v-10. It should be noted that the service machine valve, v-10, cannot be opened when there is any significant differential pressure across the valve. Draw a vacuum on the service machine, expansion joint volume and the sniffer region by means of the EGCR vacuum pump (through v-9).

10. Bring the service machine, expansion joint volume and sniffer gas region to the reduced loop pressure (less than or equal to 295 psig) with helium from the EGCR Helium Transfer System

(through v-9). Open v-1, v-3, and v-5 and raise loop, sniffer region and service machine pressures to 295 psig with helium from the EGCR Helium Transfer System. Since the reactor was in operation prior to beginning experiment removal operations, the 3-way valve in the Sniffer Gas System (v-11) will have been previously positioned to provide relief of sniffer gas into the cell. Bleed off the mixture (largely helium, some CO_2) to the Loop Off-Gas System and repressurize to 295 psig until the CO_2 concentration is less than *____ ppm by volume. Determine the CO_2 concentration by use of a continuous gas chromatograph column connected to the sampling system. Close v-5.

12. Unlock the Bridgman closure with the nozzle closure tool. Retract the nozzle closure tool into the service machine. Close v-10. Mechanically it is necessary to close v-10 prior to rotating the service machine turret.

13. Rotate the service machine turret to turret position 2. Equalize the pressures on either side of v-10 by use of the service machine valve bypass line then shut the bypass valve. Open v-10. Connect the experiment handling tool to the instrumented experimental assembly.

14. Close the manual valves in the makeup water lines to the experimenters' head tank (see Section 2.0 for a discussion of the hazard involved in leaving these lines open). Connect the demineralized water hoses to the experiment removal cooler, open v-4, and place the experiment removal blower and cooler in operation. The loop compressors and the experiment removal blower are now operating in parallel but the experiment removal blower is passing no flow since the instrumented experimental assembly shield plug is blocking flow into the service machine.

15. Begin lifting the instrumented experimental assembly. Loop compressor flow through the experimental assembly will decrease as the experimental assembly is lifted since flow must pass up through the experiment, down through an annulus between the experiment support tube and the top nozzle inner tee section, and out through the branch of the inner tee. The length of the annulus increases steadily as the experiment is lifted. When the bottom of the shield plug passes the reducer in the top nozzle tee section, flow into the service machine via the experiment removal blower will begin.

16. Continue loop compressor flow since the uninstrumented experimental assembly is still contained within the through-tube.

---

*See page 10.

17. Continue lifting the experimental assembly into the service machine until the experiment handling tool has reached the upper limit of its travel. Open v-5. Close v-1 and v-3.

18. Close v-10 and rotate the service machine turret to turret position 3. Equalize the pressures on either side of v-10 by use of the service machine valve bypass line then shut the bypass valve. Open v-10, and insert the dummy shield plug with the replacement shield plug installation tool.

19. Retract the replacement shield plug installation tool, close v-10 and rotate the service machine turret to turret position 1. Equalize the pressures on either side of v-10 by use of the service machine valve bypass line then shut the bypass valve. Open v-10 and lock the Bridgman closure with the nozzle closure tool.

20. Retract the nozzle closure tool and close the service machine valve, v-10.

21. Depressurize and evacuate the sniffer gas region and the expansion joint volume with the Loop Off-Gas System (through v-6). Admit clean air to the sniffer gas region and expansion joint volume through v-8.

22. Raise the shielding from around the service machine nozzle. Unbolt the service machine. Remove the portable pipe section and bellows.

23. Move the service machine clear of the top nozzle tee section and replace the blind flange by hand.

24. Leak test the blind flange.

25. Transfer the instrumented experimental assembly to the desired location (storage hole, cask, etc.). The procedure for removal of the uninstrumented experimental assembly may now be started.

26. Remove the top nozzle blind flange by hand.

27. Position the service machine above the top nozzle, extend the service machine expansion joint, and bolt the mating flanges together by hand.

28. Leak test the flanged joint between the tee section and the service machine expansion. Lower the service machine nozzle shielding around the service machine nozzle.

29. Connect and leak test the portable pipe section and bellows between the permanent system piping and the service machine.

30. Evacuate the sniffer gas region and the expansion joint volume to the Loop Off-Gas System through v-6, then pressurize with helium to 295 psig through v-12.

31. Equalize the pressures on either side of v-10 by use of the service machine valve bypass line. Open the service machine valve v-10.

32. Unlock the Bridgman closure with the nozzle closure tool. Retract the nozzle closure tool into the service machine. Close v-10.

33. Rotate the service machine turret to turret position 3. Equalize the pressures on either side of v-10 by use of the service machine valve bypass line.

34. Rotate the service machine turret to turret position 2. Equalize the pressures on either side of v-10 by use of the service machine valve bypass line. Open v-10. Open v-1 and v-3. Close v-5. Begin lifting the uninstrumented experimental assembly into the stationary shield with the fuel grapple. It should be noted that with the uninstrumented experimental assembly suspended in turret position 2 inside the stationary shield by the fuel grapple, the experiment handling tool must be in the full up position. With the uninstrumented assembly in this position the fuel grapple is not in the full up position. Normally the service machine turret could not be rotated without the fuel grapple in the full up position. However, override circuits have been incorporated which permit rotation of the turret under these conditions.

35. When sufficient experiment removal blower flow has been established, gradually cut off main loop compressor flow. Observe service machine temperature as well as experiment removal blower flow to assure adequate cooling.

36. Complete lifting of the uninstrumented experimental assembly into the stationary shield. Open v-5. Close v-1 and v-3.

37. Close v-10 and rotate the service machine to turret position 3. Equalize the pressures on either side of v-10 by use of the service machine valve bypass line. Open v-10 and insert the dummy shield plug with the replacement shield plug installation tool.

38. Retract the replacement shield plug installation tool, close v-10 and rotate the service machine turret to turret position 1. Equalize the pressures on either side of v-10 by use of the service machine valve bypass line. Open v-10 and lock the Bridgman closure with the nozzle closure tool.

39. Retract the nozzle closure tool and close the service machine valve, v-10.

40. Bleed down the experimental loop to the gas storage tanks.

41. Complete the depressurization of the loop with the Loop Off-Gas System and evacuate with the vacuum pump.

42. Evacuate the upper sniffer gas region with the Loop Off-Gas System vacuum pump, then admit clean air through v-8 and close v-8. Simultaneously with steps 43 through 45 the Loop Off-Gas System should be used to dispose of the gas in the gas storage tanks. This will permit entrance of the cell for refill of the loop with clean gas.

43. Raise the temporary shielding from around the service machine nozzle. Unbolt the service machine. Remove the portable pipe section and bellows.

44. Move the service machine clear of the top nozzle tee section and replace the blind flange by hand. Transfer the uninstrumented experimental assembly to the desired location (storage hole, cask, etc.)

45. Leak test the blind flange. Open the manual valves in the makeup water lines to the experimenters' head tank.

46. Enter the cell and admit clean gas to the experimental loop by use of the Through-Tube Pressurizer and Loop Fill System.

47. Repressurize the sniffer gas region through the air charging connection, v-8.

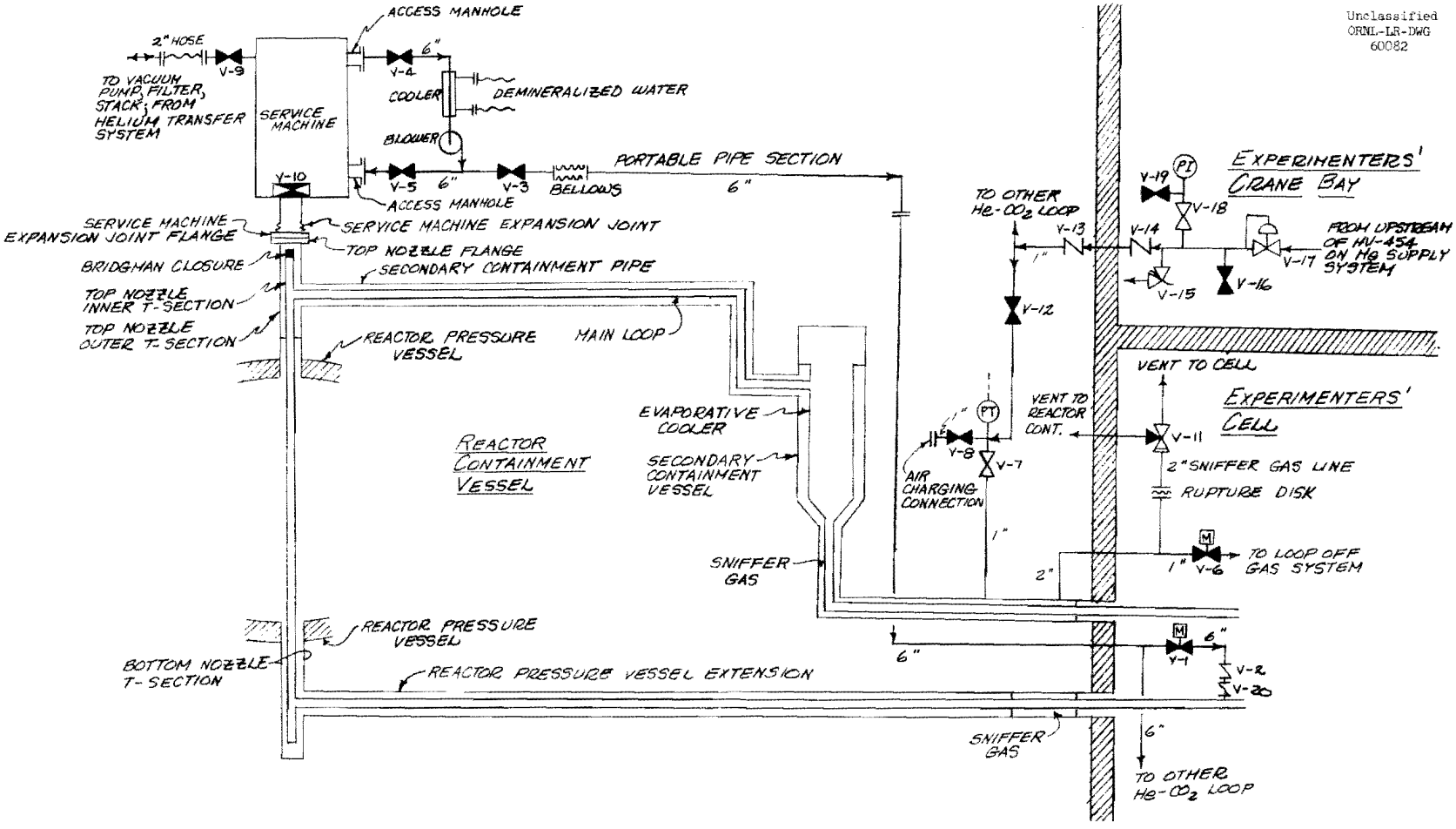

Experiment Removal Cooling System.

Code Designation H. 4.0
Date of Issue April 17, 1961

EGCR EXPERIMENTAL LOOPS
CRITERIA

Subject: CRITERIA FOR EGCR LOOP SAFETY SYSTEM

Listed below are proposed safety actions for those loop conditions which are capable of causing reactor shutdown. The values given for starting the various actions are tentative. The values may be modified when final design data or loop operating data become available. Accordingly, instrumentation should permit a wide range of adjustment of the values at which various actions are taken.

In order to prevent unnecessary reactor shutdowns due to instrument failures, three independent safety channels are to be provided for each variable which can cause automatic scram or automatic motor driven rod insertion (AMDRI). These signals are to be arranged in a coincidence-redundance system such that two out of three of the signals must indicate that an unsafe condition exists before the reactor can be shut down.

In examining subsequent paragraphs, it should be remembered that full cooling of the loop cannot precede a scram because full cooling will cause a low pressure scram.

1. High Test Section Exit Mixed Mean Gas Temperature (Alternate - High Fuel Element Cladding Temperature)

   This is the primary protection of the loop against excessive temperature. The corrective actions are as follows:

   A. Alarm when temperature reaches 1075°F.

   B. When temperature reaches 1100°F, automatically increase blower speed to maximum allowable and turn off loop heater.

   C. When temperature reaches 1150°F, automatically scram reactor and operate loop cooler at its maximum cooling capability.

2. Low Loop Pressure

   A. Alarm when pressure falls 5% below normal. Operator turns on gas transfer pump and closes valves in all lines through which gas can be removed from loop. Transfer pump is shut off manually when the desired pressure is restored or automatically if excess pressures are reached inadvertently.

B. When pressure falls 30% below normal, automatically scram reactor, turn off loop heater and operate loop cooler at its maximum cooling capability.

3. High Loop Pressure

A. Alarm when pressure increases to 5% above normal; operator attempts corrective action.

B. When pressure increases to 10% above normal, automatically turn off loop heater and transfer pump.

C. When pressure reaches 1000 psig, loop relief valve should open.

D. If pressure reaches 1100 psig, relief valve has failed to open and reactor is automatically scrammed and cooler operated at max. capacity.

4. Low River Water System Supply Pressure (Condenser Inlet)

A. Alarm when pressure reaches 20 psig. Operator attempts corrective action.

B. When pressure reaches 10 psig, an AMDRI is initiated, the loop heater is turned off and cooler operated at maximum cooling capacity.

5. Low Loop Volume Flow Rate (Measured in Cell)

A. Alarm when flow rate falls 5% below normal. Operator attempts corrective action.

B. When flow rate falls 20% below normal, automatically increase blower speed to maximum allowable.

C. When flow rate falls 30% below normal, automatically scram reactor, operate loop cooler at its maximum cooling capability and turn off loop heater.

D. When flow rate falls 40% below normal, automatically turn on the auxiliary blower.

6. Low Reactor Nozzle Coolant Flow Rate - Any Circuit

A. Alarm when flow rate drops 10%. Operator attempts corrective action.

B. When flow rate drops 25%, automatically cut off loop heater, operate loop cooler at its maximum cooling capacity and initiate an AMDRI.

7. Low Demineralized Water Head Tank Level

A. When level drops to 5 ft, an alarm sounds and a valve is automatically opened, adding water from the EGCR condensate pump discharge.

B. When level drops to 3 ft, an AMDRI is initiated, the heater is turned off and the loop heat exchanger operated at its maximum capability.

8. High Demineralized Water Temperature (In Head Tank)

This is an indication of probable failure of the river water flow to the heat exchangers. Corrective actions are as follows:

A. Alarm when water temperature reaches 120°F; operator attempts corrective action.

B. When water temperature reaches 150°F, automatically turn off loop heater, operate loop cooler at its maximum capacity and initiate an AMDRI.

9. High Cell Water Level

A dangerous condition can arise if one of the water lines in the cell ruptures. If attempts to drain the cell fail, there is the possibility of (1) water reaching the hot piping, causing it to rupture, (2) possible malfunctioning of electrical valve operators, (3) possible malfunctioning of instruments, and (4) eventual rupture of the cell rupture disc by the high water level.

Corrective actions are as follows:

A. Alarm when level reaches 2 in. below floor. If the cell vent line is open and if no radioactive gas is present in the cell, operator opens cell drain valves and attempts to cut off source of water. When level drops to 8 in. below the cell floor level, valves are automatically closed.

B. When level reaches 6 in. above floor,automatically cut off heater, initiate an AMDRI, and operate cooler at its maximum cooling capacity.

10. High Cell Temperature

Of primary concern here is the effect of high temperature on instruments. With a cell temperature above 120°F, the instruments may fail unpredictably and cannot be relied upon for safety. Most of the safety instrument sensors are located in the cells.

The high cell temperature corrective actions are as follows:

A. Alarm when air flow from either cooler drops to half of normal; operator attempts corrective action.

B. Alarm when cell temperature rises to 110°F; operator attempts corrective action.

C. When cell temperature reaches 120°F, automatically cut off loop heater, vacuum pump and transfer pump.

D. When cell temperature reaches 130°F, initiate an AMDRI and automatically operate loop cooler at its maximum cooling capacity.

11. Low Cell Temperature (CO_2 Operation only)

When the loop is operating with CO_2 as the loop coolant, the cell temperature is maintained above 90°F to prevent condensation of high pressure CO_2 in the gas lines in the cell. The cell cooling water system utilizes a flow control valve in the river water lines feeding each cooler in an attempt to maintain the cell air temperature at 95°F by throttling the cooling water flow. If the cell air temperature drops to 92°F, 7 kw electrical heating elements in one of the two coolers will be energized until the air temperature is increased to 95°F. If the air temperature continues to drop, the heating element in the other cooler will be energized when the temperature reaches 90°F. In the event of malfunction of this control system the following corrective actions are taken:

A. Alarm when temperature drops to 85°F; operator turns off cooling water supply to coolers.

B. When temperature reaches 80°F, operator initiates a motor driven rod insertion.

12. Loss of Either Y-12 or EGCR Power Supplies at the Main Switchgear

A. When either power supply is de-energized, automatically cut off loop heater, operate loop cooler at its maximum cooling capacity and initiate an AMDRI.

13. Main D. C. Power Supply Failure

A. On low D. C. bus voltage, initiate an AMDRI. Operator shuts off heater and operates cooler at its maximum capacity.

14. Experiment Mode Selector Switch

This switch will be located in the reactor control room and will provide a tie-in between the experimenters' safety circuits and the reactor. The switch will have three positions, "operate", "test", and "disconnect". Functional operation of this switch is not presently understood.

15. Startup - Run Switch

This switch will be located in the experimenters' control room. In the "Startup" position, the reactor will be held subcritical and operational interlocks will be bypassed. In the "Run" position, operational interlocks will be activated, and it will be permissible to drive the reactor critical.

16. Reactor Operations Emergency Shutdown Switch

A. In the event of an emergency condition which requires the shutdown of all experimental loops, a switch is provided in the EGCR control room which will shut off all loop heaters, operate all coolers at maximum capacity and scram the reactor.

17. Compressors

A. Failure to have two compressors running on two separate power supplies results in an AMDRI after a three minute time delay.

18. Pressure Change in Upper or Lower Sniffer Region

A. Alarm when pressure rises to 85 psig or falls to 22 psig.

B. When pressure rises to 135 psig or falls to 5 psig, automatically turn off loop heater, operate cooler at maximum capacity, and initiate an AMDRI.

19. Low Demineralized Water Flow from Auxiliary Blower

A. Alarm when flow drops to 12 gpm.

B. When flow decreases to 8 gpm, automatically cut off loop heater, operate cooler at its maximum capacity and initiate an AMDRI.

20. Fission Break

A. Reactor shutdown may be initiated at the option of the loop operator.

Code Designation H.20
Date of Issue Mar. 27, 1961

EGCR EXPERIMENTAL LOOPS
CRITERIA

Subject: EXPERIMENTAL LOOP CONTAINMENT CRITERIA

The general containment philosophy for operation of the EGCR experimental loops may be summarized as follows: Radioactive experimental loop gas must be doubly contained with respect to the reactor containment vessel and the surrounding environment at all times and for all normal and abnormal loop operating conditions except during removal of experimental fuel elements. In essence, this means that any uncontrolled radioactive gas release from the primary loop piping will be contained unless the release occurs during removal of a test element, in which case the gas may be released to the main containment vessel. Failure of the secondary containment system as a result of excessive pressure must preferentially dump the radioactive gas to the reactor containment rather than permitting an uncontrolled release to the surrounding environment.

When the reactor is at pressure without an experiment in a given experimental loop, the containment philosophy for that loop is somewhat altered. Under this condition, the loop must provide primary containment of the reactor gas coolant and failure of the primary containment will result in either release of reactor gas to the main containment vessel, or it must be contained in a separate containment volume.

The secondary containment system is designed to hold the entire mass of the experimental gas coolant with a maximum leakage rate limited to 1.0 percent of the weight of the contained gas over a 24-hr period. The reactor gas piping is considered to be part of the loop secondary containment system.

During operation of the experimental loop, the secondary containment system consists of the reactor gas volume, the sniffer gas piping, the intermediate steam cooling system and the experimental cell. The sniffer gas piping not only provides secondary containment for the primary loop piping, but it is employed as a buffer region between the reactor gas coolant and the experimental cell.

The sniffer gas system is composed of two regions. One region surrounds the primary piping in the upper tee section and the primary gas piping from the upper tee to the cell including most of the evaporative cooler. The cooler pressure tubes and tubesheet are secondarily contained by the

intermediate steam cooling system. The other sniffer region consists of a small annular pipe section in the lower chase piping. Both sniffer regions are continuously monitored for leakage into or out of the system. The integrity of the sniffer piping is monitored by pressurizing the regions with air to a pressure of 20 psig before starting the loops. The upper sniffer region is designed to contain a steady state internal pressure of 450 psig at 650°F. The small sniffer volume in the lower pipe chase is designed to hold a steady state internal pressure of 1100 psig at 975°F.

The lower sniffer region is designed to withstand full reactor gas pressure (300 psig) and also full loop gas pressure when operating at the maximum pressure condition. The upper sniffer is designed to contain the full reactor gas pressure but is not designed to contain the loop gas during operation at the maximum loop pressure. A rupture disk between the sniffer and experimental cell rated at 450 psig protects the upper region from excessive pressures. The rupture disk may be backed by a pressure relief valve to prevent the rapid depressurization of the loop below a pressure of 450 psig as a result of a failure of the primary piping in the upper sniffer region.

The reactor gas piping is employed as the secondary containment around the primary coolant piping from the cell to the reactor in the lower pipe chase. It is also used as secondary containment in the bottom tee section and around the reactor through-tube. A sniffer gas volume is interposed between the reactor gas and the cell containment volume. This prevents depressurization of reactor gas to the experimental cell as a result of a single failure of the secondary containment piping.

The experimental cell houses most of the loop service equipment and is designed to provide secondary containment of the loop gas in the event of a rupture of the in-cell piping. In order to insure containment of the loop gas, each cell is lined with welded carbon steel sheets and is designed to withstand an internal pressure of 12 psig at a maximum temperature of 150°F. The leakage, under these conditions, is limited to a maximum of 1.0 percent of the cell atmosphere over a 24-hr period.

Although the cell is designed to contain the entire loop gas under all loop operating conditions, it is not designed to contain the reactor gas. To prevent overpressurization of the cell, a 33-in. rupture disk is installed between the cell and the main containment and will be designed to relieve the cell at a cell pressure of 10 - 12 psig. Overpressurization of the cell rupture disk is likely to happen only in the event of release of reactor gas to the cell and this requires failure of two barriers.

The relative volumes of the experimental loop and cell are such that complete depressurization of a 1000 psia loop into the cell will not raise the cell pressure above 10 psig. The most recent calculations indicate that the cell pressure following depressurization of a 1000 psia CO_2 loop (the most severe condition) is in the neighborhood of 9 psig.

Since the cell rupture disk serves as a containment barrier between a radioactive atmosphere and an area inhabited by operating personnel, it is felt that the disk should be designed for a minimum factor of safety of 2. That is, loop operation should be predicated upon a maximum cell pressure of one-half the minimum rupture disk setting in the event of a rupture of the primary gas piping in the cell (this would correspond to 5 psig with the current rupture disk). This means that either loop operation will be limited to a pressure slightly above 500 psia for single cell operation, or two cells must be used for 1000 psia operation, or the cell lining must be redesigned to contain an internal pressure of 24 psig. It is presently anticipated that for Title II loop design two experimental cells will be employed for operation of each loop. This will double the expansion volume and thereby limit the cell pressure to something below 5 psig.

The experimental cell, like the main containment vessel, is normally open to the atmosphere via a filter and the stack and consequently must depend upon operation of various valves to isolate the cell and secure secondary containment. Operation of the cell isolation system is triggered by excessive airborne radioactivity in the cell atmosphere. No attempt is made to contain the loop gas in the cell unless the specific activity of the cell atmosphere exceeds some maximum permissible concentration.

If the specific activity of the cell atmosphere isolates the cell, a number of interlocks prevent violation of the secondary containment system. It will be impossible to open the cell drain valves, it will be impossible to open the main ventilation valves and, in addition, automatic valves on all gas supply lines to the cell will close, thus precluding the possibility of overpressurizing the sealed cell as a result of a failure in some gas supply system.

In order to insure the integrity of the cell containment system, all piping into and out of the cell that is normally in use and conceivably could serve as a vent to the environment must contain two automatic valves. This does not include water lines to and from the cell as long as the residual water pressure is greater than 12 psig. All gas lines entering the cell contain two check valves in series and all gas and drain lines leaving the cell contain two automatically controlled valves in series.

In view of the containment philosophy set forth in the first two paragraphs a number of operating procedures are imposed for operation of the loops. The in-cell piping isolation valves will always be closed before opening up the cell. The cell ventilation system cannot be employed nor the roof hatch removed as long as radioactive loop gas is present in the cell. This includes gas contained in the loop piping and/or the gas storage tanks. Moreover, if the mainstream gas piping, including the filter contains an

appreciable amount of radioactive particulate matter, the in-cell loop piping between the main isolation valves must be at atmospheric pressure before the cell secondary containment is violated.

When operating the reactor with no experiment in the loop, it is currently planned to pressurize the through-tube to reactor gas pressure to prevent excessive stresses in the through-tube. However, as an added safety precaution, the through-tube will only be pressurized to reactor pressure if the cell secondary containment is intact. Consequently, a rapid depressurization of the through-tube which conceivably could cause a simultaneous rupture of the through-tube will not result in depressurization of the reactor through an open cell to the surrounding environment. When the cell is open and the reactor is at pressure, the through-tube will be pressurized to some nominal value in order to provide monitoring of the integrity of the primary loop piping.

As pointed out earlier, the experimental cell is normally vented to atmospheric pressure and, consequently, there is no way to ascertain whether or not the cell containment is intact. To provide some measure of security, cell leakage tests will be performed at frequent convenient intervals during loop operation and in addition a cell leakage test will be made each time maintenance is performed inside the cell.

DISTRIBUTION

1-3. DTIE, ORO
4. M. J. Skinner