MASTER COPY

OAK RIDGE NATIONAL LABORATORY
operated by
UNION CARBIDE CORPORATION
for the
U.S. ATOMIC ENERGY COMMISSION

ORNL-TM-104

COPY NO. - 55

DATE - January 8, 1962

PROCESS DESIGN SECTION STATUS REPORT FOR NOVEMBER 1961

By

H. E. Goeller

ABSTRACT

This report summarizes the accomplishments of the Process Design Section of the Chemical Technology Division during the month of November 1961. The five major projects discussed are Transuranium, Volatility, Power Reactor Fuel Processing, Waste Studies, and Fuel Cycle Development. A number of smaller programs are reviewed under the section on Miscellaneous Projects, and project engineering accomplishments and status are reviewed in the last section.

NOTICE

This document contains information of a preliminary nature and was prepared primarily for internal use at the Oak Ridge National Laboratory. It is subject to revision or correction and therefore does not represent a final report. The information is not to be abstracted, reprinted or otherwise given public dissemination without the approval of the ORNL patent branch, Legal and Information Control Department.

LEGAL NOTICE

This report was prepared as an account of Government sponsored work. Neither the United States, nor the Commission, nor any person acting on behalf of the Commission:

A. Makes any warranty or representation, expressed or implied, with respect to the accuracy, completeness, or usefulness of the information contained in this report, or that the use of any information, apparatus, method, or process disclosed in this report may not infringe privately owned rights; or

B. Assumes any liabilities with respect to the use of, or for damages resulting from the use of any information, apparatus, method, or process disclosed in this report.

As used in the above, "person acting on behalf of the Commission" includes any employee or contractor of the Commission, or employee of such contractor, to the extent that such employee or contractor of the Commission, or employee of such contractor prepares, disseminates, or provides access to, any information pursuant to his employment or contract with the Commission, or his employment with such contractor.

1.0 TRANSURANIUM PROGRAM
(W. E. Unger)

1.1 Transuranium Laboratory, Bldg. 7920 (B. F. Bottenfield, E. J. Breeding, W. G. Stockdale, and G. B. Berry)

The conceptual design of the revised TrU Processing Facility is progressing according to schedule. Meetings were held in the offices of Catalytic Construction Company on November 20-21, 1961, to review preliminary building layouts and service flowsheets, to initiate contact between the ORNL and Catalytic instrument design personnel for the establishment of basic instrument design parameters, and to discuss mechanical design details, particularly in the areas of target charging and target removal from the cell bank.

The criteria for the conceptual design are now well established, and it should be possible to launch Title I engineering for the entire project soon after January 1, 1962. Approval prints of building layouts, architectural and structural drawings, and service flowsheets have been received for formal review. Approval of these drawings and attendant specifications early in December for the conceptual design report will constitute establishment of firm criteria for Title I engineering.

Advanced design funds totaling $200,000 have been made available by the AEC for Titles I and II engineering by Catalytic.

An estimate by Catalytic Construction Company of the fixed contract part of the Transuranium Facility was reviewed and adjusted. Their estimate plus the ORNL previous estimate was formalized into an AEC Construction Project Data Sheet estimate at $8,700,000, the adjusted capital allowance for the Transuranium Facility.

1.2 Special Mechanical Equipment Design (F. L. Hannon)

Intercell Conveyor. The procedure for installation of the conveyor housing was prepared and transmitted to the Architect-Engineer. This included a written description with two illustrations; the illustrations were later redrawn as drawing D-43906 for reference purposes.

Three concepts of multiple canister schemes were designed; these were issued as drawings D-43895 through D-43898.

Design of a control device to operate automatically the mockup conveyor for life testing has been completed and is being fabricated.

Equipment Transfer Case. The transfer case door and cubicle roof hatch door designs have been completed as drawings D-43935 through D-43940 and have been transmitted for fabrication. Design of the transfer case bottom assembly has been modified and drawings D-43930 through D-43934 are being revised accordingly.

Two design concepts for equipment placement and removal operations within the cubicle have been completed and analyzed.

Two design concepts showing general construction of the transfer case were prepared. The most suitable concept, drawing D-43909, was selected for additional design.

Cell Cubicle. Drawing D-43912 showing the cubicle mockup frame and support has been completed and transmitted for fabrication. Several layouts of the floor pan have been prepared, and more difinitive design of the most suitable unit has been started. Investigation of cubicle lighting equipment has been initiated.

1.3 Transuranium Flowsheet Studies (J. E. Bigelow)

Solvent Extraction. The ORACLE Program "Kremser-Murphree" was used to calculate the distribution of five actinide elements in the second solvent extraction cycle of the TrU flowsheet, E-34610. The Am, Cm, Bk, and Cf feed concentrations used were those given in the flowsheet for one-year irradiated Pu^{242}. An arbitrary value of 1 was taken as the Es feed concentration. Distribution coefficients as a function of aqueous phase acidity were obtained from Chemical Development Section A. Eight stages, with a Murphree efficiency of 70%, were assumed for both scrub and extraction sections. Flow ratios of 1:1:2 for feed:scrub:extractant were assumed.

The calculations indicate that, if the HCl normality of the feed and scrub is less than 1.55, the berkelium will be preferentially extracted and can be separated from curium and americium which remain in the raffinate. At acid normality of 1.0, better than 99.9% berkelium recovery is achieved with a curium DF of over 10^5. At higher acidities, the berkelium will remain in the raffinate and hence can be separated from californium, which tends to remain in the extract. This separation is not as clean because of the smaller difference in distribution coefficients. As an example, at 1.9 N HCl, about 95% of the berkelium goes with the raffinate, with only a 10^2 DF from californium. More stages or an optimization of flow ratios would probably improve this.

Target Fabrication. More information on the physical characteristics of the five rare earth-oxide powders being used in target fabrication tests has been received. Particle size distribution data show that most of the mass of the oxides is in the form of particles of 3 to 30-micron diameter. These data are not well correlated with the results previously reported which suggest a majority of very small particles. One possible interpretation is that the settling curves measured the size distribution of large agglomerates of many fine particles. It is not known how well these agglomerates might retain their integrity during powder handling for fuel fabrication.

1.4 TrU-HFIR Target Rod Design (J. P. Nichols)

Calculations, literature surveys, and discussions among Chemical Technology Division, Metallurgy Division, and Reactor Division personnel were begun in an attempt

to firm-up the design of TrU-HFIR target rods. It is anticipated that most of the pertinent features of the target rods will be approved by the three interested groups by early 1962. The irradiation of a target prototype using enriched uranium as a stand-in for plutonium is expected to begin in the spring of 1962.

1.5 Solvent Extraction Facility, Bldg. 4507 (F. L. Peishel)

A preliminary cost estimate of the facility for the chemical development work to be performed in Bldg. 4507 was prepared. The estimate indicates that the design, fabrication, and installation of equipment for Cell 3 will cost $64,000 and $188,000 for Cell 4, for a total of $252,000. These figures do not include any contingency and are based on a rough draft of the engineering flowsheets. The costs will be divided between fiscal years 1962 and 1963. Fiscal 1962 funds are available to the extent of $125,000.

Project work during November included preliminary data accumulation to establish sizes and configurations of equipment, materials of construction, and building utilization. Engineering flowsheets are now being prepared.

2.0 VOLATILITY PROGRAM
(R. P. Milford)

2.1 Assistance from BMI and Metallurgy Division

Results of the metallographic examination of HyMu 80 and INOR-8 specimens exposed to 37.0-50.5-12.5 mole % $LiF-NaF-BeF_2$ at 650° while dissolving Zircaloy-2 with HF were received from BMI. These results supplement the micrometer measurements reported last month and are as follows:

Specimen	Location	Corrosion Rate, mils/month
HyMu 80	Vapor	2-3
INOR-8	Vapor	7
HyMu 80	Interface	75-85
INOR-8	Interface	110
HyMu 80	Liquid	2-3
INOR-8	Liquid	7

The metallographic examination revealed no significant differences as compared to micrometer measurements, since no intergranular penetration was observed.

A fluorination test vessel charged with the aforementioned $LiF-NaF-BeF_2$ melt has been shipped to BMI. Although the above results indicate that this mixture is not usable in the hydrofluorination step, determination of fluorination corrosion rates is

thought to be worthwhile for over-all process evaluation. Some scrap Zircaloy-2 has been obtained from Metallurgy and shipped to BMI for future hydrofluorination runs.

Battelle letter reports BMI-X-180 and BMI-X-181, entitled "Corrosion Analysis of ORNL Pilot Plant Components" and "Corrosion Investigation of HyMu 80 Under Hydrofluorination Conditions During Dissolution of Zircaloy-2 in LiF-NaF-ZrF_4 Melts," respectively, were received during November.

Metallurgy Division Metallographic Studies. Results of metallographic studies made during October were received too late for inclusion in last month's report and consequently are reported here. These studies included (1) the further examination of the Group I VPP Fluorinator Test Specimens (previously reported in Litman's monthly reports dated January 10 and February 13, 1961); (2) the examination of a 1-1/2-in. length of 1/2-in. Schedule 40 INOR-8 pipe which had been plugged, drilled, and removed from the salt transfer line between the hydrofluorinator and the fluorinator; and (3) a failed bellows from an off-gas valve removed from the VPP.

Metallographic examinations continued during November, but no reportable results are available.

Metallurgy Report Status. A. P. Litman's ORNL-TM report on VPP hydrofluorinator and fluorinator corrosion has passed Metallurgy Division's technical review and will be typed on mats for reproduction soon.

3.0 POWER REACTOR FUEL PROCESSING
(E. L. Nicholson)

3.1 Darex Pilot Plant (E. L. Nicholson)

Flowsheet studies were continued on the feasibility of designing a Darex Pilot Plant for the ICPP that could demonstrate either batch or continuous Darex processing and which would be capable of processing both high and low enrichment U^{235} fuels and thorium fuels. Additional preliminary material balance flowsheets were prepared and forwarded to ICPP for comment. They were:

E-45976	Darex Chemical Flowsheet - Continuous APPR
E-45977	Darex Chemical Flowsheet - Consolidated Edison Darex-Thorex
E-45978	Darex Chemical Flowsheet - Continuous Yankee Atomic

A Darex coordination meeting was held at the ICPP on November 20-21, 1961, to review the Phillips and ORNL flowsheet proposals and establish objectives and schedules for the Darex Pilot Plant program. The meeting is summarized in detail in ORNL-TM-93, "Results of the ICPP-ORNL Darex Coordination Meeting at ICPP, November 20-21, 1961."

The Darex Pilot Plant will be located in a cell in the ICPP Pilot Plant Building. The pilot plant will be capable of both batch and continuous operation and will demonstrate processes for high and low enrichment U^{235} fuels and thorium fuels. A secondary objective will be to work off a substantial backlog of highly enriched fuel. The pilot plant capacity will be 6 to 10 kg U^{235} per day for continuous processing of highly enriched fuel and an equivalent volumetric capacity for low enrichment fuel. ThO_2-UO_2 fuels and others requiring batch processing because of unusual problems will be processed at a reduced rate. The use of 90% HNO_3 as makeup acid and the ORNL flowsheets were adopted in principle, with details to be resolved by additional development and engineering studies. Attempts will be made to avoid discharging liquid wastes containing chloride, thus eliminating a chloride waste storage system. This implies extremely close process control and a good knowledge of the chemistry and engineering of off-gas evolution and recovery in dilute acids. Furthermore, it requires disposal of off-gases, which undoubtedly will contain some chlorine compounds, directly to the stack without caustic scrubbing. These points may finally be resolved only by cold-testing of the proposed pilot plant.

Solids generation and handling is the outstanding single problem interfering with a successful continuous Darex process.

3.2 Mechanical Processing of Fuels (W. F. Schaffer, Jr.)

Segmenting Cell Activities. All SRE mechanical processing equipment and auxiliaries were removed from Cell A of Bldg. 3026 during the month except the multipurpose saw, which should be removed during the first week in December. Both in-cell and exterior piping associated with the removed equipment has also been removed.

Prior to decontamination, the general cell background at the south end near the door was between 300 and 600 mr/hr. The activity at the north end of the cell was less than 10 r/hr and was about 40 r/hr in the vicinity of the hot drain. The air filters read 30 r/hr at the time of removal.

Following decontamination with detergents, with steam and water on the walls and ceiling, and with oxalic acid on the floor, activity was reduced by at least a factor of 10. Background readings at the south end of the cell ranged from 30 to 40 mr/hr with somewhat higher readings at the north end due to a number of localized hot spots which read from 5 to 6 r/hr at contact. The drain was still the hottest area and was measured at about 10 r/hr at contact. Further cleaning with the detergents will be continued before resorting to 3% HF--20% HNO_3 for final decontamination.

Dissolution of specimens of the stainless steel jackets was completed using a molar ratio of Cl^- to stainless steel of 3.5 to 1. Analysis of the product solutions showed a uranium loss of from 0.1 to 4.6 mg uranium to mole of stainless steel. Carbon concentrations of $\leqslant$0.22% were present in seven of the ten product solutions. Only trace quantities of fission products were found by a gamma spectrometric analysis. Metallurgical examination of other samples of jacket is not yet complete.

Personnel exposures experienced during the cell decontamination period have averaged only 19% of the allowable dose with a maximum accumulative individual dose of 58% of tolerance.

Specially fabricated equipment removed from the cell is awaiting decontamination in the burial ground work area before storage. Many of the commercial items were discarded and buried when the expense of decontamination was shown to be greater than the original cost.

Shipment of Fuel to Savannah River for Processing. A production sample of the fuel shipping canister was received, inspected, and tested. The canister was dimensionally acceptable, but the machining of the threads was rough and the seal surfaces of the lid and body had tool chatter marks and nicks which resulted in a small leak during the pressure check. The vendor was advised of the problem by the Purchasing Department and they promised to correct the condition.

The fuel carrier shell was received. A helium leak check revealed very small leaks at three pipe fittings, which were also found to be carbon steel instead of stainless steel. The vendor removed and replaced the fittings, and subsequent inspection of the carrier was satisfactory. The lead filling was delayed until early in December as a result of the repairs.

The shipping rack and tie-down assembly design and fabrication were completed.

A loading device is required to load the canned fuel into the shipping canister in the storage cell with the Lee electrically-operated manipulator. The first design was not considered satisfactory and a new design is approximately 90% complete. Fabrication of this device is relatively simple and should not delay the shipping schedule. The first shipment to Savannah River Plant is now scheduled for December 29, 1961.

Chop and Leach Program. The leacher drum was operated on a test rack using chopped stainless steel--clad porcelain fuel to determine optimum orientation of the drum for loading fuel and for testing of the drive and electrical circuitry. Approximately 2.25 liters bulk fuel volume, equivalent to 6.5 kg of UO_2 in a Mark I prototype fuel bundle, is the maximum amount of fuel per flight that can be adequately covered by the leaching acid with the leacher set at a 15° angle from the horizontal.

In order to ensure proper discharge of a complete batch of rings on each revolution, a baffle was added to the discharge end of the drum. The spray wash-down tests to determine the practicability of cleaning plugged screens in the leacher have not been performed, since it has not yet been possible to plug the screens with porcelain or stainless steel fines from the chopped product.

When the leacher is rotated one complete revolution, the leaching acid is also moved up one stage. This leaves the bottom flight empty and approximately 5 minutes is required for the flight to refill at the present acid flow rate. If chopped fuel is dropped in the empty flight, a possibility of creating an acid-deficient solution exists, with resultant Pu precipitation. A delay circuit is being incorporated in the electrical circuit to hold the chopped fuel in the conveyor until the first stage is refilled with acid.

The shear has been tested with the spring-loaded inner gag design, which appears to be acceptable. The spring reduces the force required to move the gag at zero hydraulic pressure from approximately 800 lbs to 100 lbs. The length of the last cut is determined by the thickness of the inner gag, since the pusher head is unable to move inside the inner gag. With the current gag design, the last pieces are approximately 1-1/2 in. in length.

Tests have also been conducted to determine the feasibility of shearing against the flat side of the bundle rather than across the diagonal. Both flat and stepped blades have been tested on this configuration. The first cut on the fuel bundle using the flat blade produced chunks with as many as nine tubes held together by ferrules. While discrete pieces were produced during the remainder of the tests, the bundles were not compacted to the extent of those produced by diagonal shearing. Pronounced drag-back of the tubes as the blade was retracted was observed. Minor difficulties also were experienced in feeding the bundle past the gags. No further work is planned using this method.

One carburized fuel element was produced in an attempt to simulate severe radiation damage to a stainless steel--jacketed fuel element. The element was carburized to a different degree across the tube bundle as well as along its length. The front section nearest the gas inlet in the muffle furnace ranged from 3.18% to 2.2% carbon, the center region from 1.79% to 1.7% carbon, and the end section from 1.43% to 1.11% carbon. Metallographic examinations indicated that metal was homogeneous as opposed to surface hardening. Vickers hardness ranged from 260 to 420 and averaged about 386 or about 40 Rockwell C. Only the half of the bundle with the higher carbon content has been chopped at this time and required approximately 25 tons as compared with approximately 50 tons for ductile uncarburized stainless steel jacket. More stainless steel and porcelain fines were produced with the carburized fuel element than the ductile fuel element, as one would predict. No difficulty was experienced in feeding or shearing the fuel, although portions of the jacket were crushed by the force exerted by gags. The fuel element was broken by the action of the blade rather than sheared.

New carburizing conditions have been established, based on the results of the first run, which should produce an element with a more uniform and lower carbon content of approximately 1%.

4.0 FUEL CYCLE STUDIES
(A. R. Irvine)

4.1 Thorium Fuel Cycle Development Facility Design (A. R. Irvine)

Criteria for the revised Thorium Fuel Cycle Development Facility, Bldg. 7930, to be located in Melton Valley, is being developed as rapidly as possible, since an Architect-Engineer is to be assigned by the AEC soon after the first of the year to make a preliminary design and estimate. The revised facility requested by the AEC will include an expanded chemical processing area. The original facility, limited principally to fuel reconstitution and manufacturing development, was costed at $3,900,000.

The capital funds for this facility have been established at $6,000,000 maximum. Preliminary scouting estimates have been made to determine roughly how large the facility can be and fall within the budget. Using a 25% contingency and a 25% allowance for design and inspection, the allowable building and cell cost, in a conceptual study estimate, should not exceed $2,679,000.

A number of cell arrangements were studied in an effort to obtain the optimum system for processing and refabrication of Th-U^{233} based fuel assemblies. The major problem of satisfactory materials handling and utilization of cell space can apparently best be accomplished by having the working cells arranged in a line, with the decontamination cell and radiation lock placed to one side and connected by shielded doors to the two remotely maintained cells. It is planned that remotely maintained cells will be used for the operations of mechanical treatment of irradiated fuels and for the fuel fabrication operations prior to complete containment of the fuel material by cladding or a similar barrier. Contact maintenance will be used for the cell housing the final fabrication and inspection equipment where no particulate activity will be uncontained. The chemical cell will be so arranged that either contact or remote maintenance may be used, although it is planned that the initial installation will employ contact maintenance. When operating under the contact maintenance philosophy, all active materials will be contained inside vessels and piping which will be equipped with decontamination devices.

The cell space required to accomplish all the desired operations is about 75% greater than that provided in the formerly proposed U^{233} Metallurgical Development Laboratory Conceptual Design (KLX-1835). In order to increase the size and shielding thickness and not exceed the budgetary limitation, a number of cost reductions must be found in the original concept. Cost reductions appear to be possible in window design, wall liner material, removable service plug design, cell cooling equipment, building ventilation, and utilization of building space.

The design basis for the facility has been fixed as follows:

Feed: 1/4 CETR or one HTGR assembly.
Processing rate for fission product removal: 10 kg Th/day.
Decay time: 60-90 days.
Minimum fission product decontamination factor: 10.
Maximum size of fabricated assembly: 3 ft length routinely, 10 ft length with difficulty.
U^{232} maximum content: 2500 ppm based on U^{233}.
Maximum time since last separation of U^{232} daughters: 90 days.

4.2 BNL-Kilorod Program (A. R. Irvine, B. B. Klima, E. M. Shank)

Several possible schemes for purification of U^{233} for the BNL-Kilorod Program were considered. Although other possible arrangements had attractive research or operational features, the most reasonable and economic approach under existing conditions is to use the Thorex equipment with minimum modification and to run an Interim-23 (thorium rejection) type flowsheet using a fluoride scrub. The only new equipment anticipated is a small evaporator and possibly two geometrically safe catch tanks. It may be possible to use equipment previously fabricated for another job but never installed. If possible, a new solvent, di-secondary butyl phenyl phosphonate (DSBPP), which has a high separation factor for thorium from uranium, will be employed. In this case, thorium salting with subsequent thorium discard to waste will not be required. The same equipment arrangement will be used in either case.

The phase of the program covered in this section includes receipt of the thoria sol from Bldg. 4501 and uranium solution, precipitation of the uranium as ammonium diuranate (ADU), blending of the ADU and the sol, evaporation of water from the sol-gel, and calcination of the solids.

Engineering flowsheet D-45960 has been drawn, approved, and issued. Equipment flowsheet D-45961 has been completed and now awaits final approval and distribution. This equipment flowsheet includes a material balance which is based on 10 kg of thoria sol per batch. The equipment has been sized and is described in CF-61-11-53 Another memo has been written which details the proposed operating procedure.

Design work on the equipment and cubicle has been started and is to be completed February 15, 1962. The solids preparation equipment will be installed in a processing cubicle on the third level inside Cell 4.

This facility is being designed in close cooperation with the Metallurgy Division, who are responsible for the design and installation of the solids attrition and fuel element loading facility which is to be installed on the first and second levels inside Cell 4.

5.0 WASTE PROGRAM
(J. O. Blomeke)

5.1 Plant Waste Facility Improvements (F. E. Harrington, F. N. Browder)

No effort was expended in November on design of the new waste tanks and evaporator or on the Melton Valley collection system.

The Engineering Department is considering installing the old intermediate-level waste evaporator and condensers in Cell A of Bldg. 3505 as a temporary unit until the new waste evaporator and storage tanks are installed. Alternates, utilizing modified existing Bldg. 3505 equipment, were studied. The two most promising approaches included use of tank A-6 as a feed tank and A-8, after installing existing coils, as the evaporator and use of A-6 as feed tank and F-1-E and C-1-E (existing evaporators) fed from a new pump and pressure header as the evaporator.

A meeting was held with J. A. Murray, T. W. Pickel, and W. R. Whitson to enable the Engineering Department to consider these alternates before the final decision on the temporary evaporator facility is reached.

The Operations Division requested test evaporation of three current intermediate-level waste samples. The first sample was concentrated by a factor of 14.1 in a laboratory batch evaporation. There were no visible signs of foaming or scaling. The evaporator heel contained about 20 ml of solids after cooling to room temperature. The condensate decontamination factor exceeded 10^5 at a concentration factor of 3.4. The df's from concentration factor intervals 3.4 to 5.7 and 5.7 to 14.1 were 2.4×10^3 and 72, respectively.

The feed sample concentrations were as follows:

Na^+	3.36 mg/ml
OH^-	0.04 N
NO_3^-	7.34 mg/ml
$SO_4^=$	1.50 mg/ml
Total solids	11.55 mg/ml
Gamma activity	6.99×10^6 counts/min/ml (analysis from Radiochemical Laboratory not yet received)

5.2 Waste Calcination Hot Cell Facility (H. O. Weeren)

The designs of the transfer tank, feed tank, condensate catch tank, seal pot, and the scrub liquor catch tank were completed and approved for construction. Construction of some of these vessels was started. Construction of the shell of the calciner furnace was started; construction of the furnace proper will be started when the furnace elements arrive.

Waste solution will be moved from tank to tank by means of air lifts. Liquid seals will be used to isolate the calciner pot, condenser, and scrubber from the rest of the system so that these vessels can be kept under a nitric oxide gas blanket. The flow rate of waste to the calciner pot is unfortunately so small that it is below the capacity of even the smallest air lift. For this situation two air lifts will be used, one working against the other so that only the difference in the capacity of the two air lifts will flow to the calciner pot.

5.3 Waste Calcination Pilot Plant Design (J. M. Holmes)

Mechanical Development Program. The mechanical development program planned for Lockheed Nuclear Products facility at Georgia Nuclear Laboratories will be carried out in three phases. These will include (1) heliac welding and mechanical closure tests to develop a permanent seal for the pots, (2) remote mechanical equipment tests to demonstrate positioning of the pot and connecting it to its vapor line, and (3) a demonstration of a remote welding machine if the welded seal developed in phase 1 appears promising.

A test assembly similar to that used for testing the seal welding procedure in phase 1 is shown in Fig. 1. The seal weld will be made after thoroughly purging the interior of the assembly with argon and then inserting the screwed cap. Automatic Heliac weldings using a nonconsumable electrode will fuse the lips of the seal. Additional filler metal will not be used in this test. During the welding operation, the assembly will be turned automatically by a turntable and the electrode will be clamped in a stationary position. Upon completion of the weld, the vessel will be pressure-tested at the maximum temperature and pressure conditions expected during pot storage.

In the assembly shown in Fig. 1, the threads were designed to take most of the stresses, resulting from pressure buildup, off of the seal weld. Another assembly has been designed without the threads but with heavier weld lips in order to test the strength of the weld alone at the expected pot pressures.

The phase 1 studies will also include leak testing of mechanical seals such as a Grayloc seal similar to the one shown in Fig. 2.

Phase 2 will comprise a cell demonstration of the positioning of the pot calciner in its furnace mounted on a dolly and connecting and disconnecting the pot from its vapor line. A sketch of the furnace, dolly, and connecting station is shown in Fig. 3 and the gasketed connector in Fig. 4. In Fig. 3 the pot is centered in the furnace just underneath the connecting station; in Fig. 4 it is shown in the lower center connected to its vapor and feed lines. In actual operation, the pot will be lowered into the furnace, positioned beneath its vapor line, lifted along with its furnace by jacks mounted on the dolly, and clamped to its vapor line by a screw clamp operated remotely or by a shaft extending through the cell wall. Figure 4 shows a gasketed joint design for sealing the pot vapor, feed, and probe lines from each other and the environment. Figure 2 shows a similar design for a Grayloc connector where the main vapor line seal will be made by the tapered

UNCLASSIFIED
ORNL-LR-DWG 60558

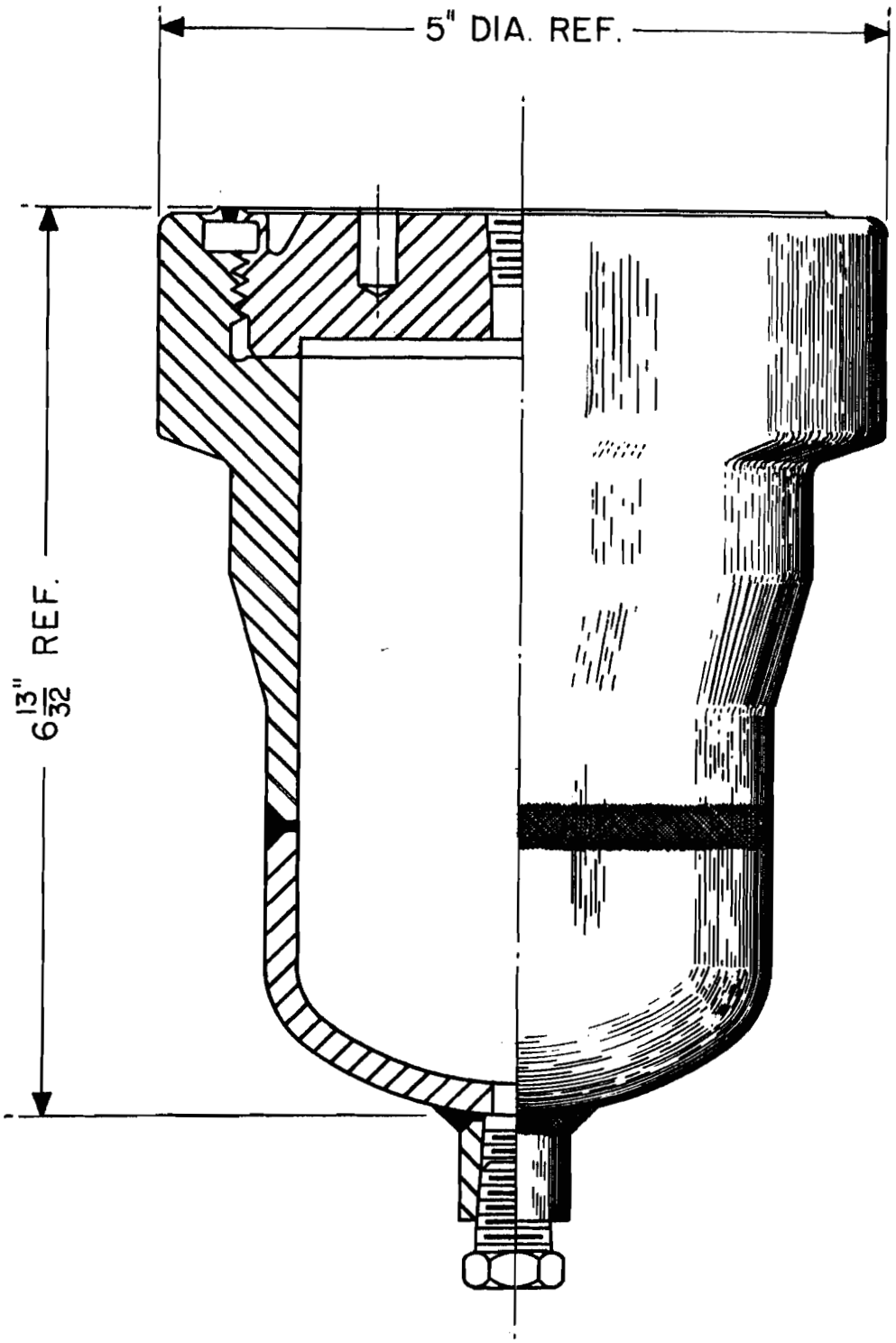

Fig. 1. Test Assembly

UNCLASSIFIED
ORNL-LR-DWG 59668

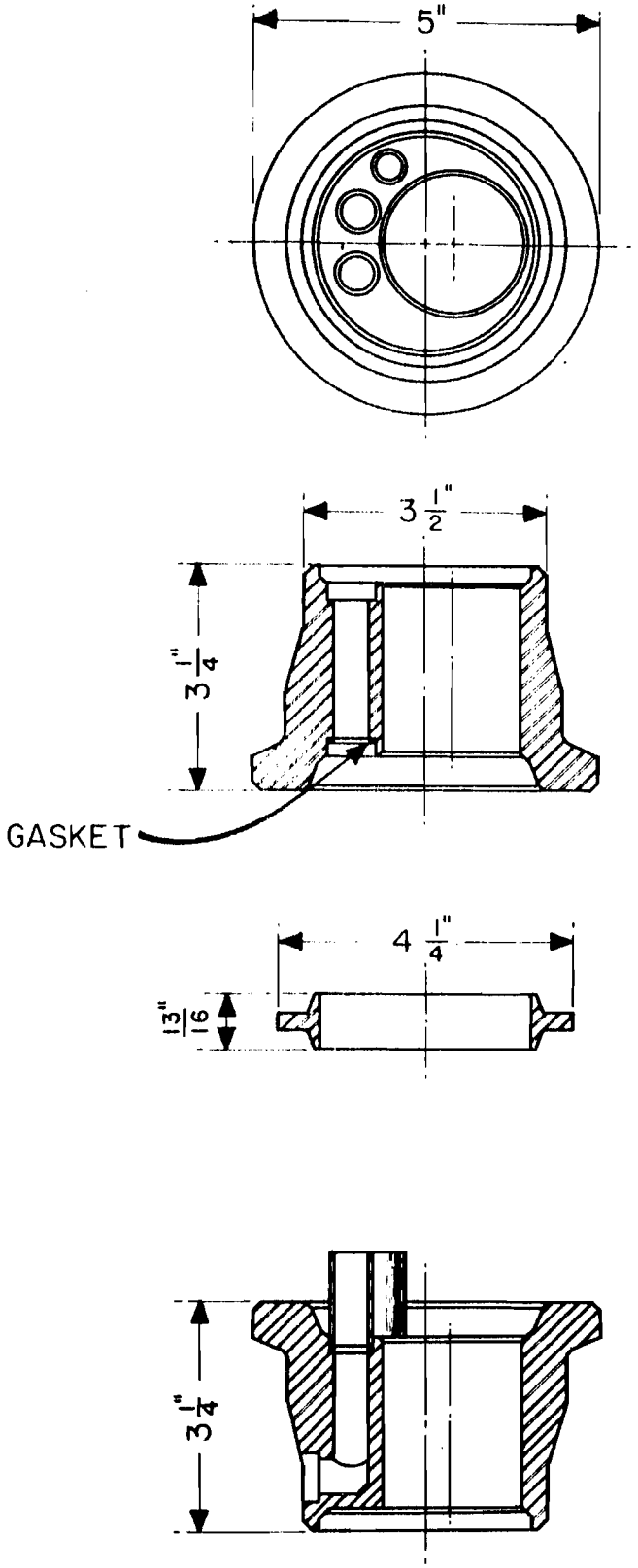

Fig. 2. Grayloc Connector

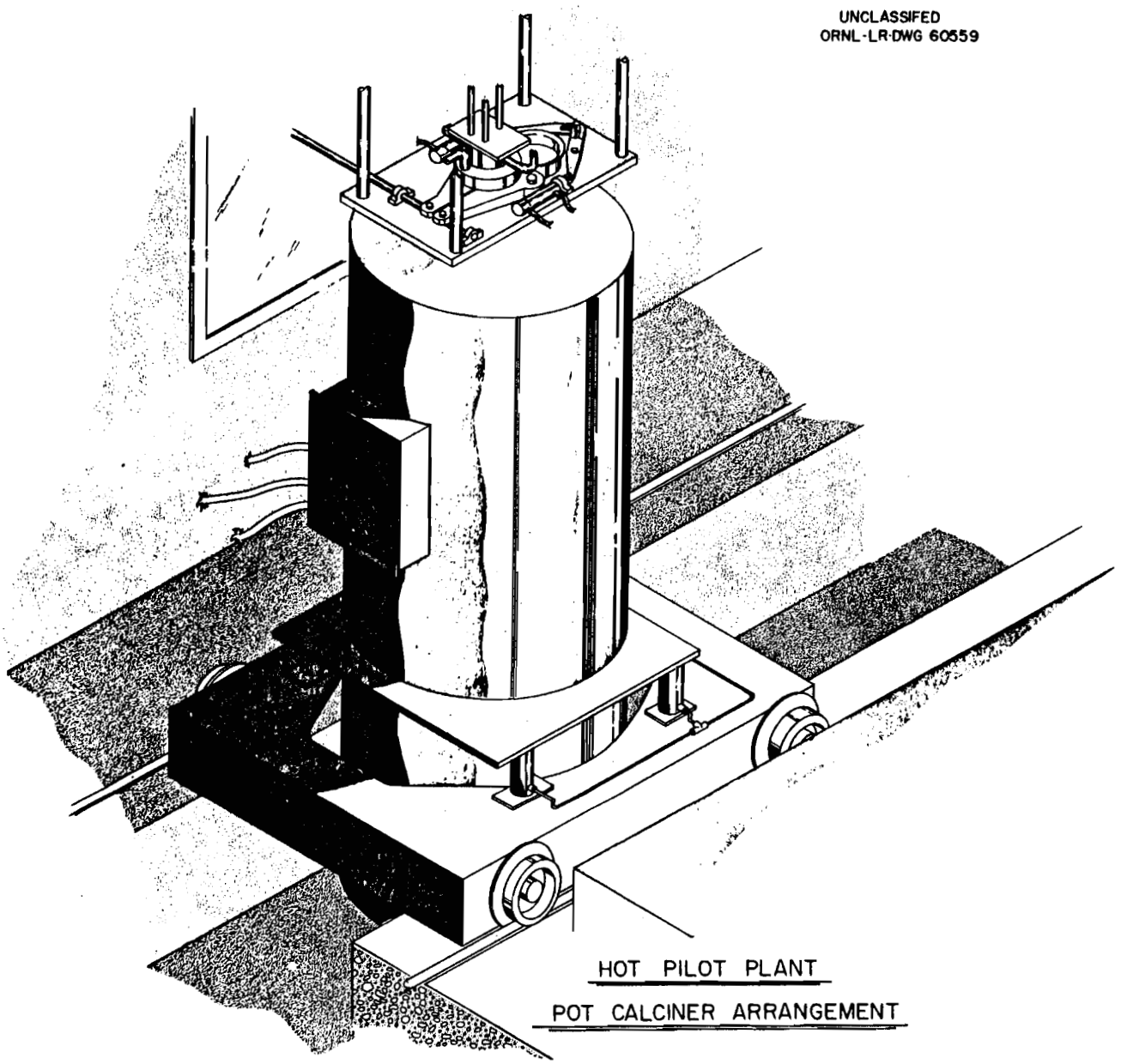

Fig. 3. Hot Pilot Plant Pot Calciner Arrangement

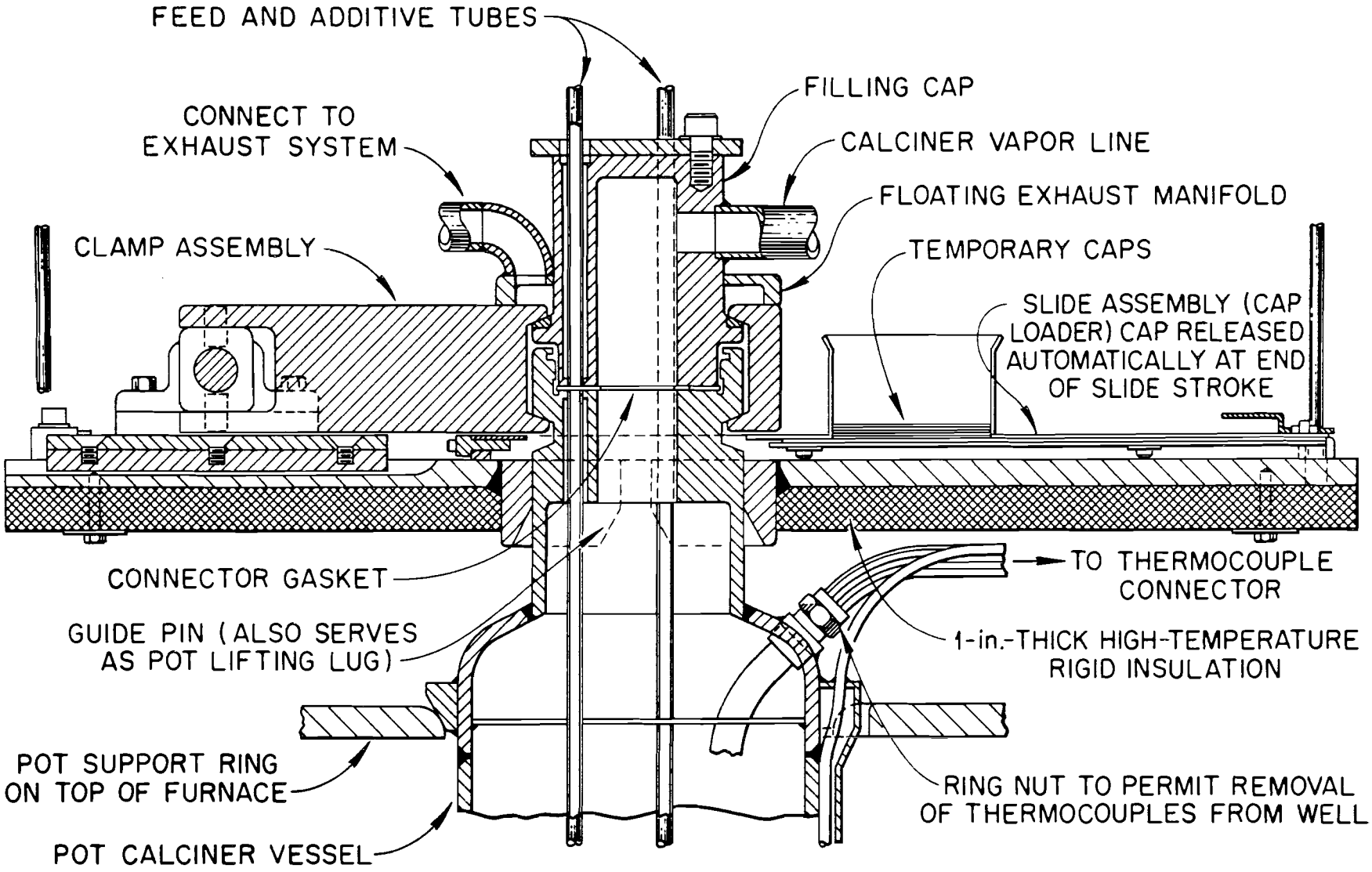

Fig. 4. Gasketed Connector Assembly

metal ring seal and the feed and probe line seals will be obtained with small gaskets as indicated.

After filling the pot, the clamp will be opened and the pot and furnace lowered slightly. During this operation, exhaust ports in the connector assembly will provide a sweep of air across the seal face to prevent contamination of the cell. A temporary metal plate cap will then be dropped on top of the pot connector using the slide mechanism shown in Fig. 4. The pot and furnace will then be lowered to its mobile position, moved over to the sealing station, and a permanent seal attached for storage.

The connector in Fig. 4 incorporates the welded cap design for permanent closure shown in Fig. 1. This connector will also be modified to permit the installation and testing of a permanent gasketed seal. The Grayloc connector in Fig. 2 will have a blank mating hub inserted at the sealing station and a screwed clamp will be applied for permanently sealing the vessel.

After sealing, the pots will be removed from the furnace and stored for observation of pressure and temperature buildup. During this period a vent will be provided on the caps to permit venting of excess pressure buildup in the pots should this occur.

6.0 MISCELLANEOUS PROJECTS

6.1 Safety and Containment (B. F. Bottenfield, W. G. Stockdale)

Building 3508 Containment. The proposed modifications to the ventilation and containment systems for Bldg. 3508 have been reviewed and approved by all interested parties in the Chemical Technology Division and by T. A. Arehart of the ORNL Radiation Safety and Control. The construction is being scheduled by the E & M Division to blend as well as possible with the research and development activities within the building.

Filter Handling Shield. The design and estimate of a shielded carrier for removing and disposing of off-gas filters from Chemical Technology filter installations was received from the Engineering Department. The estimated cost of the shield is $12,000. This completes job order A-01549-11. After review within the Chemical Technology Division, a request will be made to the Policy Committee for funds to build the shielded carrier.

6.2 Nuclear Safety Design Assistance (J. P. Nichols)

U^{233} Storage Tank Criticality Test. Neutron multiplication measurements were performed on the glass raschig ring packed U^{233} storage tank in Cell 3 of Bldg. 3019 as it was slowly filled with 11 kg of U^{233} as solution at a concentration of 100 g/liter. The multiplication values obtained indicated that the equipment is adequately safe. The effectiveness of the rings as a fixed poison for U^{233} solution cannot be realistically assessed until more U^{233} is available for loading into the tank.

Criticality Control of VPP Caustic Filter. A fixed poison network for the Volatility Pilot Plant caustic filter was designed, evaluated, and submitted to the Criticality Review Committee for approval.

Criticality Control in The Chop-Leach Facility. A more liberal loading for the chop-leach facility conveyor, whereby 6.5 kg of 8.6% fully enriched UO_2--91.4% ThO_2 or 5% enriched UO_2 would be permitted in each flight, was evaluated and submitted for approval. Tentative approval by A. D. Callihan, J. T. Thomas, and J. P. Nichols was obtained. Approval by the Criticality Review Committee is anticipated at the next meeting. Previously, permission was obtained to load 9.65 kg per flight if two empty flights were assured between each set of six loaded flights. The requested change will make the controls for the feeder conveyor much simpler.

Drop Testing of HRT Fuel Solution Carrier. Drop tests were performed with a container filled with water and 1.5 in. o.d. x 1.75 in. long x 0.125 in. wall borosilicate glass raschig rings to obtain qualitative information concerning the effects of accidental dropping of the HRT fuel transfer carrier. The test container was chosen such that a drop from an equivalent height would result in more shock in the test container than in the fuel transfer carrier. A single drop from a height of 3 ft onto a steel surface resulted in breakage of approximately 20% of the rings into two or more pieces and a decrease in packed height by approximately 5%. Five successive drops from a height of 5 ft resulted in breakage of approximately 50% of the rings and a decrease of the packed height by approximately 20%.

6.3 Fuel Processing Studies for Reactor Division

AHBR Chemical Plant Cost Estimate (F. E. Harrington). The first draft of a report for the conceptual design and estimate of a facility to reprocess the fuel from the AHBR study reactor was completed and issued for correction and comments on November 16.

MSCR Chemical Plant Study (R. P. Milford). Difficulty has been experienced in evolving processing rates suitable for study. Present plans are to use 1.2 and 12 cu ft/day of salt, assume immediate fluorinations, 200-day storage for Pa decay to U^{233}, refluorination, and salt discard. The UF_6 recovered from both fluorinations will be converted to UF_4 and used to make up fresh reactor feed salt.

During preliminary calculations a discrepancy in salt densities was noted. A revised MSCR memo will be issued by Reactor Division personnel presenting densities calculated by the method proposed by S. Cantor of the Reactor Chemistry Division.

Thus far, the fluorination step, the CRP trap, the UF_6 absorption step, and an alternative distillation step have all been studied at the 12 cu ft/day rate. Present plans are to fluorinate the 12 cu ft of salt in two batches per day. Only the CRP trap would be a movable bed; the absorbers would be large-scale versions of the alternate fixed-bed units now used in the Volatility Pilot Plant.

6.4 Eurochemic Assistance Program (E. M. Shank)

One transmittal letter listing 26 documents was sent. One specifically-prepared document containing HAPO-originated information was sent to Eurochemic via DIA. Three Eurochemic-originated documents were reproduced and distributed for comments.

6.5 HRLAL Design (W. R. Winsbro)

All drawings and specifications required for Title II design have been received, reviewed, and returned "approved as noted." The final review of all drawings and specifications will be performed at the Vitro offices in New York during the first two weeks of December.

Except for ORNL procurement of manipulators and monitoring instruments, all construction and installation for the HRLAL will be performed under a prime AEC "lump sum" contract. While the contract for this phase of the work will probably be awarded around February 1, 1962, "on-site" construction is not scheduled to start until August 1, 1962. The interval between February 1 and August 1, 1962, is required to permit personnel evacuation of Bldg. 2005; CPFF removal of contaminated roofing, windowsills, etc., from Bldg. 2005; and contract demolition of Bldg. 2005 down to concrete floor slabs and footings by ORNL. During this same period the AEC will provide for additional core drilling at building site by the Army Corps of Engineers, CPFF excavation at building site, and "lump sum" installation of the stabilized aggregate base required for the new building structure. Procurement and prefabrication of all 304L stainless steel and Hastelloy-C piping, equipment, and ductwork required for the project will also be done prior to August 1, 1962, since most of these materials must be cast in or under the main floor slab for the building and must be available before on-site construction is started. This work will be done by the prime contractor.

6.6 Fuel Shipping Study (L. B. Shappert)

Two identical 1.5-ton lead-filled casks were coated with Stresscoat and dropped from various heights up to 4 ft. The two cylindrical casks were dropped with their axes horizontal so that they struck a 6-in.-thick steel pad on their sides, making line contact between the cask and the drop pad.

Very clear stress patterns have been observed and photographed. The patterns indicated that the areas of highest stress occurred at both ends of the cask and at the middle of the cask along the line of contact. Few stress cracks appeared in the cask cavity. The casks deformed less than 1/4 in. along the line of contact when dropped 4 ft. The results appeared to be the same for both casks.

Difficulty has been experienced in calibrating the accelerometers. In drop tests in which steel contacted steel, the shock wave frequency was apparently too high, jamming the amplifier. A filter, in the form of a capacitor in parallel with the accelerometer pickup, has evidently helped correct the situation. Calibration of the accelerometers is continuing.

The Elk River reactor has been studied in an attempt to determine the factors which minimize fuel element handling costs from time of discharge from the reactor through reprocessing. The costs studied include cask costs, inventory costs, shipping costs, handling costs, and costs of insurance against loss. The study is not yet complete, but it appears that center fuel pin temperatures encountered when coolant is lost is likely to be one prime controlling factor in cask size and number of elements shipped per cask under presently proposed regulations.

6.7 Assistance to Chemical Development Sections (A. M. Rom)

Purex IWW Carrier. Construction drawings of the proposed cask were sent to Hanford for comments. A reply is expected in the coming report period. Meanwhile, approval was sought and obtained from the Policy Committee for the expenditure of $17,500 to build the carrier. AEC authorization permitting Y-12 to build the carrier and to use depleted uranium as the shielding media was also obtained.

Building 4507 Optics. The prism viewer to be used in conjunction with a telescope for viewing the interior of Cell 2 was completed and delivered to Bldg. 4507. The instrument will be tried out on a test stand before being installed in Cell 2.

Plasma Jet. Fabrication of the Monel jet flange and auxiliaries for use by the Applied Research Group was completed and initial testing was begun.

Chloride Volatility Reactor. Preliminary design of the Halogen Torrefactor was completed and prints were circulated for comment.

6.8 CANE Project (J. W. Landry)

The equipment for the CANE sequenced sampling experiment was installed at the Project Gnome site in November. Special insulators were fabricated into the equipment in the field when data were obtained that there would be electrical transients that could adversely affect the galvanometers in the recorder and the electric detonating caps in the explosive valves. A transient in the order of 10 kv potential and in the order of 10 milliseconds duration, immediately following device detonation, was expected to produce an a-c surge in the order of 10^6 amperes in the sampling pipe and in the supporting frame of the sampler. The recorder transducers and the caps had been situated in the sampler, where there was a serious possibility that the transient would induce sufficient currents to deflect the galvanometers off-scale and cancel the records and to trigger the valves prematurely. The sampling equipment was frequently contaminated with windborne dust, mist, and snow; and, since the maximum safe current of the transducers and the maximum safe no-fire current of the caps were only 100 microamperes each, extensive insulation was required. No satisfactory electrical ground potential existed and it was necessary to individually isolate the instrumentation circuits to avoid interference under conditions of the transient. Spurious signals appeared in the initiator circuit wherein the detonating device was to actuate the explosive-valve timer; an arming relay had to be incorporated in the initiator circuit to preclude the possibility of premature triggering of the explosive valves.

7.0 PROJECT ENGINEERING

7.1 Process Design Section Drafting Room Status (J. H. Manney)

A list of the 46 drawings started during November 1961 is given in Table 1. In addition, 34 drawings started earlier proceeded to the check print stage and 24 to approved status. In November, 19 sketches and 100 illustrations were prepared.

A breakdown of drafting time during November by cost accounts is as follows:

Account No.	Man-hours	% of Total	Account No.	Man-hours	% of Total
3370-1	12	0.7	3370-108	544	31.3
3370-8	56	3.2	3370-113	40	2.3
3370-20	140	8.1	3370-117	28	1.6
3370-22	212	12.2	3370-121	112	6.5
3370-30	20	1.2	3370-123	58	3.3
3370-33	124	7.1	3370-128	81	4.7
3370-34	69	4.0	3370-129	16	0.9
3370-72	52	3.0	3370-135	96	5.5
3370-106	12	0.7	3290-	64	3.7
			Total	1736	100.0

There were 8 hours of overtime worked in November.

7.2 Engineering Department Assistance

A summary of drawings prepared during November in the Engineering Department is given in Table 2.

7.3 Material Purchase Status

Table 3 gives a listing of all outstanding purchase requisitions (except instruments) as of December 1, 1961.

7.4 Work Order Status

Table 4 presents a listing of all outstanding work orders as of December 1, 1961, for which the Process Design Section is responsible.

H. E. Goeller, Chief
Process Design Section
Chemical Technology Division

HEG:mep

Table 1. Summary of Drawings Started in the PDS Drafting Room During November 1961

Job No.	Drawing No.	Rev.	Title	Date Started
309	D-34593	1	LITR ThO_2 Autoclave Bomb	11/17/61
504	D-34567	4	Shipping Cask D-38 Assembly and Details	11/22/61
	C-45651		Additional Shielding for Shipping Cask D-38	11/22/61
	D-45962		PRFP Super "D" Carrier	11/16/61
	D-45965		PRFP Super "D" Carrier Details	11/30/61
505	D-45792		Halogen Torrefactor	11/14/61
507	D-34600	1	U^{233} Storage Sys. Schematic Instrumentation Arrangement	11/1/61
601	C-45768		Calciner Pot	11/21/61
	C-45776		Feed Tank	11/1/61
	C-45777		Condensate Catch Tank	11/13/61
	C-45779		Seal Pot	11/1/61
	C-45783		Scrub Liquor Catch Tank	11/1/61
	C-45784		Scrubber	11/22/61
	C-45963		Waste Disposal Development, Shell for Calciner Furnace	11/17/61
	C-45964		Waste Disposal Development, Top & Insert for Calciner Furnace	11/17/61
701	C-45959		TrU Development Mass Flowmeter Plastic Model	11/6/61
	D-46003		TrU Development Single Unit Disconnect Type 1	11/13/61
	D-46005		TrU Development Single Unit Disconnect Type 2	11/14/61
702	D-45662	3	Pa-U Program, Dissolver Assembly, Equipment Rack A	11/13/61
	D-45672	1	Pa-U Program, Dissolver Miscellaneous Details	11/15/61
	D-45689	4	Pa-U Program, Processing Box, Back Elevation	11/13/61
	D-45693	3	Pa-U Program, Equipment Rack B	11/10/61
	E-45800	1	TrU Development Am-Cm Recovery Chemical & Equipment Flowsheet	10/31/61
	E-45801		TrU Development Am^{241} Target Process, Chem. & Equip. Flowsheet	11/1/61

(Continued)

Table 1, Continued

Job No.	Drawing No.	Rev.	Title	Date Started
702, continued	E-45802		TrU Development Am-Cm Recovery Engineering Flowsheet No. 1	11/22/61
	E-45803		TrU Development Am-Cm Recovery Engineering Flowsheet No. 2	11/27/61
	E-45804		TrU Development Am-Cm Recovery Engineering Flowsheet No. 3	11/30/61
Miscellaneous				
-22	E-45976		Darex Demonstration Plant, Darex Chem. Flowsheet Continuous APPR	11/8/61
	E-45977		Darex Demon. Plant, Darex Chem. Flowsheet Con. Ed. Darex-Thorex	11/10/61
	E-45978		Darex Demon. Plant, Darex Chem. Flowsheet Cont. Yankee Atomic	11/15/61
-57	D-45758	1	Belgium Model Mixer-settler Mark IV Assembly	11/13/61
	D-45759	1	Belgium Model Mixer-settler Mark IV Detail Sheet #1	11/13/61
	D-45760	1	Belgium Model Mixer-settler Mark IV Detail Sheet #2	11/13/61
	D-45761	1	Belgium Model Mixer-settler Mark IV Detail Sheet #3	11/13/61
-135	D-45738		Th Fuel Cycle Develop. Lab. Layout C First Floor Plan	11/24/61
	D-45739		Th Fuel Cycle Develop. Lab. Layout C Second Floor Plan	11/28/61
	D-45740		Th Fuel Cycle Develop. Lab. Layout C Third Floor Plan	11/28/61
	D-45741		Th Fuel Cycle Develop. Lab. Layout C Longitudinal Section	11/29/61
	D-45960	2	BNL Kilorod Prog. Th-U(233) Solids Prep. Eng. Flowsheet	11/13/61
	D-45961		BNL Kilorod Prog. Th-U(233) Solids Prep. Equip. Flowsheet	11/17/61
4435-72	E-45769		AHBR Chem. Plant Fig. 2 Section I Feed Preparation	11/1/61
	E-45770		AHBR Chem. Plant Fig. 3 Section II Solvent Extraction	11/1/61
	E-45953		AHBR Chem. Plant Fig. 7 Layout Plant B	11/2/61

Table 2. Summary of Drawing Progress in Engineering Department for Month of November 1961

Building No.	Work Order Number	Drawing Number	Rev.	Title	Transmittal Date
3026-D	A-70579-13D	D-42961	1	Shipping Carrier for SRE Fuel Canister Assembly	11/16/61
		D-42962	1	Shipping Carrier Detail Sheet #1	11/16/61
		D-42963	1	Shipping Carrier Detail Sheet #2	11/16/61
		D-42964		Loc. of SRE Ship. Carrier on Rowe Transfer Co. Neuter Tr.	11/16/61
		D-42965		Shipping Carrier Detail Sheet #3	11/16/61
4505	A-93174-03	D-37249		Piston Rod Extension Details	11/1/61
		A-43421		Cylinder to Envelope Seal Assembly	11/10/61
		A-43422		Cylinder to Envelope Seal Detail Sheet #1	11/10/61
		A-43423		Cylinder to Envelope Seal Detail Sheet #2	11/10/61
4505	A-70579-17D	D-47155		Die Set for Birdsboro Shear Assembly	11/27/61
		D-47156		Die Set for Birdsboro Shear Assembly Detail Sheet #1	11/27/61
		D-47157		Die Set for Birdsboro Shear Assembly Detail Sheet #2	11/27/61
Off Area	A-01484-11	D-43406	1	Lifting Hook for Pot Calciner Detail Sheet #1	11/16/61
		D-43407	1	Lifting Hook for Pot Calciner Assembly	11/16/61
		E-43408	1	Furnace Dolly Assembly	11/16/61
		D-45631	1	Furnace Mockup Detail Sheet #2	11/16/61
		D-45633	1	Furnace Mockup Assembly	11/16/61

Table 3. Purchase Requisition Status, December 1, 1961

Job No.	Purchase Req. No.	Date Issued	Description
Miscellaneous			
-59	D-0014	3/29/61	U Jet and explosive valve tests
4507	D-0043	5/26/61	Periscope alterations
-59	D-0069	8/16/61	Field costs, Gnome test
-20	D-0073	9/1/61	Fabricate two Pyroceram vessels
-113	D-0075	9/18/61	Purchase Visicorder
-20	D-0077	9/20/61	Tube furnace
500	D-0083	10/5/61	Nichrome V sheet and plate
500	D-0084	10/5/61	Nichrome V tubing
500	D-0086	10/5/61	Haynes 25 tubing
3420-44	D-0089	10/17/61	3/8-in. & 1/2-in. Cast bronze ball valves
3420-44	D-0090	10/17/61	Two SS 3/8-in. bar stock ball valves
-128	D-0094	11/6/61	Four SS trays
-133	D-0095	11/7/61	16 Spur gears
-59	D-0096	11/17/61	Conax valve spare parts
-113	D-0097	11/20/61	Accelerometer cable
Waste Calcination			
605	G-1003	6/7/61	Lockheed subcontract
605	G-1007	10/16/61	Mockup fabrication
605	G-1008	11/7/61	One Graylok assembly
605	G-1009	11/17/61	2300 Watt band heater
PRFP - Mechanical			
510	D-6265	9/26/61	65 Canisters
511	D-6268	11/17/61	4 qts Molykote lubricant
O-17 Pilot Plant			
3420-44	D-6817	10/30/61	One SS ball valve
3420-44	D-6818	11/27/61	One SS ball valve
Volatility			
404	D-7019	6/29/61	INOR-8 pipe and tubing
404	D-7020	6/29/61	INOR-8 sheet and plate
Transuranium			
-123	G-9761	10/27/61	Eight 0 to 0.1-in. water vacuum gages
-123	G-9763	11/2/61	Castle manipulator tongs
-123	G-9764*	11/6/61	Two Rotameter floats
-123	G-9765*	11/15/61	Kel F filter disc
-123	G-9766	11/21/61	Two pipettes
702	G-9767	11/29/61	One sheet Homalite
702	G-9768	11/29/61	Pyroceram coated impellers

* Issued and completed in November 1961.

Table 4. Work Order Status December 1, 1961

Job Number	Job Order Number	Charge Number	Engr.	Date Issued	Cost Estimate	Description	% Complete
3019	A-01546-11	337053-125	WGS	7/24/61		Ventilation System for Sample Gallery	100
3019C	A-93249-01	329090	WGS	6/29/60	9,100	Hot Analytical Cell and Hood Vent Filters, Titles I, II, and III	100
3019C	A-93249-02	329090	WGS	6/29/60	2,600	Hot Analytical Cell and Hood Vent Filters, ORNL Participation	100
3019C	A-93249-03	329090	WGS	6/29/60	1,500	Hot Analytical Cell and Hood Vent Filters, I & C Division Participation	100
3019C	A-93249-04	329090	WGS	6/29/60	82,600	Hot Analytical Cell and Hood Vent Filters, Lump-sum Contract Hixon Construction Co.	100
3505	A-70570-11	337053-132	HBG	7/26/61	15,000	Loading of SRP Carriers	12
4507	A-01559-11	337053-133	AMR	8/31/61	1,900	Final Adjustments for 4507 Containment	75
4507	A-01586-11	337054-20	ARI	11/9/61	1,900	Renovation of 4507 Gantry Crane	50
4507	A-01589-11	337053-123	FLP	11/21/61	475	Changes to Cell 3 for Pa-U Program	100
General Division Programs							
-1	A-01549-11	337053-1	WGS	8/4/61		Design and Estimate for Off-gas Filter Portable Shield	20
-1	A-41624-41 & 61	337053-01	PLR	7/16/59	10,000	General Equipment Repair and Storage for Re-use	100
IWW Carrier							
-30	A-93789-01	3370XX-30	AMR		17,500	Fabricate IWW Carrier	0
CANE Project							
-59	A-01545-11	337053-59	JWL	7/24/61	7,318	Fabricate Gnome Sampler Vessels	90
-59	A-20475-11	337053-59	JWL	3/16/61	17,840	Fabricate Instrumentation for Gnome Sequenced Sampler	100
-59	A-20484-11	337053-59	JWL	4/14/61	5,000	Design and Fabricate Transistorized Timer	100
Fuel Shipping Study							
-113	A-01499-11	337053-113	LBS	5/5/61	15,000	Fabricate Three Carrier Models for Drop Test	90
-113	A-01570-11	337053-113	LBS	9/20/61	12,000	Assistance by S. L. Greenstreet (Y-12) on Cask Drop Tests	10
Pa-U Program							
-123	A-01587-11	337053-123	FLP	11/13/61	350	Modify Impact Wrench	0
-123	A-93687-01	337092-123	BBK	7/21/61	6,875	Convert Model 8 Manipulators in 4507 Mockup for Heavy-duty Service	100
BNL-Kilorod Program							
-135	A-01588-11	337053-135	BBK	11/13/61	16,500	Design Chemical Equipment for BNL-Kilorod Program	0
Homogeneous Reactor Program							
304	A-20345-11	337053-109	BFB	5/18/60	3,707	Instruments for Spectrophotometric Fuel Analysis Loop	100
Volatility Program							
404	A-01533-11	337053-73	RPM	6/28/61		Assistance to IMI on VPP Corrosion Tests	10
Power Reactor Fuel Processing							
500	A-20428-11	337053-22	ARI	11/30/60	580	Instrumentation for Experimental Flowmeter Test	0
503	A-70447-11	337053-133	ELN	1/16/61	100,000	Modification of Immi Equipment for Pu-Al Processing	90
503	A-93553-01	337092-133	ELN	3/7/61	5,465	Fabricate Accessories for Pu-Al Carrier	95
506	A-93636-01	337092-132	WRWh	5/19/61	4,730	Install and Pipe U-233 Storage Tank	70
506	A-93636-02	337092-132	WRWh	6/27/61	1,370	Install Support for 6-in. Lead Shield	100
506	A-93636-03	337092-132	WRWh	7/10/61	2,850	Install 6-in. Lead Shield Around U-233 Storage Tank	65
510	A-93762-01	337092-106	WFS	10/13/61	5,100	Fabricate Carrier for Declad SRE Fuel	5
511	A-20556-11	337053-107	WFS	9/22/61	1,000	Preliminary Study of Leacher Position Indicator	0
511	A-93174-01	337092-106	WFS		171,600	Procure 250-ton Shear from Birdsboro Corporation	100
511	A-93174-03	337093-106	WFS	6/2/60	3,360	Design Auxiliaries for 250-ton Shear	35

(Continued)

Table 4, Continued

Job Number	Job Order Number	Charge Number	Engr.	Date Issued	Cost Estimate	Description	% Complet
Waste Program							
603	A-93534-10	363290-00	FEH			Design of Wa Tank and Evaporator	100
604	A-01584-11	337053-134	WRWh	11/1/61	1,270	Install Oliver acuum Filter	90
604	A-70455-12*	337053-34	JOB	3/30/61	2,000	Decontamina of Used Equipment for Ion Exchange Pilot Plant, Modify 2528	100
605	A-01484-11	337053-34	JOB	3/27/61	18,500	Design Pot Se for Calciner Pilot Plant	90
605	A-01547-11	337053-30	HOW	7/26/61	19,300	Fabricate and stall Pot Calcination Hot Cell Unit	100
605	A-01558-11	337053-33	JOB	8/28/61	1,980	Fabricate Den meter and Controlled Rate Steam Jet	100
605	A-01590-11	337053-34	JMH	11/22/61		Crate 10 kw ater for Shipment	0
Transuranium Facility							
7920	A-01550-11	337053-108	WDB	8/8/61	2,000	Design Revisi of TrU Concepts	20
7920	A-70489-51	337053-108	WEU	11/ /61	83,600	TrU Concepts Design by Catalytic	0
7920	A-70489-61	337053-108	WEU	4/25/61		Architect-Eng eer Design Assistance, TrU Mechanical Equipment	90
7920	A-70397-14	337053-28	BFB	12/12/60	39,500	Fabricate and stall Mockup of Intercell Conveyor	75
702	A-70397-13*	337053-28	BBK	7/15/60	4,950	Design and Ins all Instruments for Transuranium Cell 3 Glove Box	100
702	A-70397-16	337053-28	BBK	5/26/61	18,900	Modify Cell 4 Bldg. 4507, and Install TrU SOX	0
702	A-70397-18*	337053-28	BBK	5/26/61	5,400	Instrumentatio Design and Installation, TrU SOX, 4507 Mockup	25
702	A-70442-11	337053-108	BFB	8/21/61		Assignment of . L. Hannon to CTD for TrU Mechanical Design	95
7920	A-70582-01	337053-108	HBG	7/19/61		Design Assista e from K-25	50

C - Work Orders concerned with Containment.

* - Request for close-out submitted.

** - A-93174-03 and -04 by Unit Operations Section.

DISTRIBUTION

1. E. D. Arnold
2. J. E. Bigelow
3. R. E. Blanco
4. J. O. Blomeke
5. B. F. Bottenfield
6. E. J. Breeding
7. J. C. Bresee
8. F. N. Browder
9. K. B. Brown
10. W. D. Burch
11. W. L. Carter
12. F. L. Culler, Jr.
13. E. J. Frederick
14. D. E. Ferguson
15-16. H. E. Goeller
17. H. B. Graham
18. A. T. Gresky
19. P. A. Haas
20. F. L. Hannon
21. F. E. Harrington
22. J. M. Holmes
23. A. R. Irvine
24. B. B. Klima
25. Eugene Lamb
26. J. W. Landry
27. W. H. Lewis
28. J. T. Long
29. J. H. Manney
30. R. P. Milford
31. J. P. Nichols
32. E. L. Nicholson
33. F. L. Peishel
34. J. T. Roberts
35. P. L. Robertson
36. A. M. Rom
37. J. B. Ruch
38. A. D. Ryon
39. W. F. Schaffer, Jr.
40-42. E. M. Shank
43. L. B. Shappert
44. M. J. Skinner
45. W. G. Stockdale
46. J. C. Suddath
47. W. E. Unger
48. J. W. Ullmann
49. C. D. Watson
50. H. O. Weeren
51. M. E. Whatley
52. W. R. Whitson
53. W. R. Winsbro
54. O. O. Yarbro
55. Laboratory Records, RC
56-67. Laboratory Records
68-69. Central Research Library
70. Document Reference Section
71-85. DTIE
86. R and D Division, ORO
87. J. A. McBride, Phillips, ICPP
88. J. T. Stevens, Phillips, ICPP
89. J. A. Buckham, Phillips, ICPP
90. C. M. Slansky, Phillips, ICPP
91. K. L. Rohde, Phillips, ICPP
92. R. A. McGuire, Phillips, ICPP