OAK RIDGE NATIONAL LABORATORY
operated by
UNION CARBIDE CORPORATION
for the
U.S. ATOMIC ENERGY COMMISSION

MARTIN MARIETTA ENERGY SYSTEMS LIBRARIES
3 4456 0060100 7

ORNL-TM-316

COPY NO. - 1

DATE - August 21, 1962

(CF-60-5-20)

HAZARDS EVALUATION FOR BLDG. 3019: I. SOLVENT EXTRACTION II. FLUORIDE VOLATILITY - VOL. 5

I. W. R. Winsbro, A. C. Schafer, W. T. McDuffee
II. R. P. Milford, W. H. Carr

ABSTRACT

The hazards associated with radiochemical processing operations planned for Bldg. 3019 have been evaluated. Maximum plant inventories for fissionable materials and fission products and maximum magnitudes for the various types of credible accidents that might disperse radio- the environment as air-borne aerosols have been established. Calculations indicate ...e maximum credible accident would be a nuclear incident in the plutonium product ...orage vessel in the solvent extraction section. Containment modifications proposed for the building ventilation, cell exhaust and vessel off-gas systems will provide adequate containment for such a postulated maximum accident. In the fluoride volatility section a criticality incident in the hydrofluorinator during a water flush after a series of runs is considered the maximum credible accident, but the probability of occurrence is very low and the dose to personnel outside the cell would be only 1.4r.

Standards of construction and containment, assumptions made to evaluate the potential hazards of release of radioactive material, and methods of calculation used for development of this hazards analysis are given in ORNL-2956, Summary Report - Hazards Analyses of Radiochemical Processing and Waste Disposal at Oak Ridge National Laboratory, Sects. 4.0, 5.0 and 6.0.

...RESEA... LIBRARY
...OLLECTION
...AN COPY
ANOTHER PERSON
...lse to see this
...with document
...arrange a loan.

...TICE

This document contains information of a preliminary nature and was prepared primarily for internal use at the Oak Ridge National Laboratory. It is subject to revision or correction and therefore does not represent a final report. The information is not to be abstracted, reprinted or otherwise given public dissemination without the approval of the ORNL patent branch, Legal and Information Control Department.

LEGAL NOTICE

This report was prepared as an account of Government sponsored work. Neither the United States, nor the Commission, nor any person acting on behalf of the Commission:

A. Makes any warranty or representation, expressed or implied, with respect to the accuracy, completeness, or usefulness of the information contained in this report, or that the use of any information, apparatus, method, or process disclosed in this report may not infringe privately owned rights; or

B. Assumes any liabilities with respect to the use of, or for damages resulting from the use of any information, apparatus, method, or process disclosed in this report.

As used in the above, "person acting on behalf of the Commission" includes any employee or contractor of the Commission, or employee of such contractor, to the extent that such employee or contractor of the Commission, or employee of such contractor prepares, disseminates, or provides access to, any information pursuant to his employment or contract with the Commission, or his employment with such contractor.

CONTENTS

	Page
Part I. SOLVENT EXTRACTION FACILITY	5
1.0 INTRODUCTION	5
1.1 Purpose and Uses	5
1.2 Location and Distance from Other Facilities	5
1.3 Building Description and Area Classifications	7
1.4 Personnel Control	7
1.5 Process Description	12
1.6 Criticality	14
1.7 Liquid Waste Systems	14
1.8 Gaseous Waste Systems	15
1.9 Monitoring Systems	16
2.0 SUMMARY	17
2.1 Nuclear Safety Hazards	17
2.2 Evaluation of a Maximum Credible Criticality Incident Release	20
2.3 Solvent Explosion and Fire Hazard	23
2.4 Evaluation of a Maximum Credible Explosion Release	24
2.5 Comparison of Hazards for Credible Accidents	25
Part II. FLUORIDE VOLATILITY PROCESS FACILITY	27
1.0 INTRODUCTION	27
1.1 Purpose and Uses	27
1.2 Location and Distance from Other Facilities	27
1.3 Building Descriptions and Area Classifications	27
1.4 Personnel Control	27
1.5 Process Description	27
1.6 Criticality	30
1.7 Liquid Waste Systems	30
1.8 Gaseous Waste Systems	30
1.9 Monitoring Systems	31
2.0 SUMMARY	35
2.1 Nuclear Safety Hazards	35
2.2 Explosion and Fire Hazards	36
2.3 Evaluation of Noncriticality Event Leading to Release of Radioactive Material	38

MARTIN MARIETTA ENERGY SYSTEMS LIBRARIES

3 4456 0060100 7

Part I.

		Page
3.0	DESCRIPTION OF BUILDING AND SERVICES	41
3.1	Building Description	41
3.2	Building Ventilation Description	47
3.3	Gaseous Waste System	52
3.4	Liquid Waste Systems	54
4.0	PROCESS DESCRIPTION	57
4.1	Fuel Element Dissolution	57
4.2	Solvent Extraction: Gross Fission Product Removal (Cell 5)	58
4.3	Solvent Extraction: Partitioning and Stripping (Cell 6)	58
4.4	Second Cycle Solvent Extraction (Cell 7)	59
4.5	Solvent Recovery No. 1 (Cell 7)	59
4.6	Solvent Extraction, Fissionable Material (Cell 3)	60
4.7	Plutonium Anion Exchange (Cell 3)	60
4.8	Solvent Recovery No. 2 (Cell 3)	60
5.0	HAZARD DESCRIPTION	61
5.1	Radiation	61
5.2	Criticality	63
5.3	Chemicals	68
5.4	Fire and Explosion	68
6.0	BUILDING SAFEGUARDS DESCRIPTION	75
6.1	Fire and Explosion Protection	75
6.2	Area Monitoring Instrumentation	76
6.3	Emergency Control Panelboard	78
7.0	OPERATING PROCEDURES	81
7.1	Normal Operating Procedures	81
7.2	Preventive Maintenance	85
7.3	Nonroutine Operations	85
8.0	EMERGENCY PROCEDURES	86
8.1	3020 Stack Release	86
8.2	Process Off-gas Release	87
8.3	Process Waste System Release	88
8.4	DOG Hydrogen Explosion Hazard	88
8.5	Cell Vapor Explosion Hazard	89
8.6	Cell Fire Hazard	90

Part II.

	Page
3.0 PLANT AND PROCESS DESCRIPTION	91
3.1 Building Description	91
3.2 Process Description	91
3.3 Waste System	99
4.0 HAZARDS EVALUATION	99
4.1 Radiation	99
4.2 Chemicals	102
4.3 Explosions	108
4.4 Fire	110
4.5 Criticality	110
4.6 Maximum Credible Accident	110
5.0 OPERATING PROCEDURE	111
5.1 Method of Approach	111
5.2 Master Run Sheet	111
5.3 Individual Run Sheets	111
5.4 Categories of Run Sheets	111
5.5 Maintenance Procedures	112
5.6 Design for Operational and Equipment Safety	112
6.0 EMERGENCY PROCEDURES	113
6.1 System of Alarms	113
6.2 Normal and Total Emergency Shutdown	114

Reports in This Series

Vol. 1	Summary Report of Hazards Evaluation	ORNL-2596
Vol. 2	General Description of Oak Ridge Site and Surrounding Areas	CF-60-5-27
Vol. 3	Description of ORNL Liquid Waste Systems	CF-60-5-28
Vol. 4	Detailed Assessment of Solid and Liquid Waste Systems	CF-60-5-29
Vol. 5	Hazards Report for Building 3019	CF-60-5-20
Vol. 6	Hazards Report for Building 3505	CF-60-5-21
Vol. 7	Hazards Report for Building 2527 and PRFP High Level Waste Tanks	CF-60-5-22
Vol. 8	Hazards Report for Building 3026	CF-60-5-23
Vol. 9	Hazards Report for Building 3508	CF-60-5-24
Vol. 10	Hazards Report for Building 4507	CF-60-5-25
Vol. 11	Hazards Report for Building 3517	CF-60-5-26

Part I. SOLVENT EXTRACTION FACILITY

1.0 INTRODUCTION

1.1 Purpose and Uses

The Bldg. 3019 solvent extraction facility is used for the dissolution of spent reactor fuel elements and the separation of fissionable and fertile material from fission products and each other by solvent extraction. Construction of the processing cells was completed in 1944 for the pilot plant demonstration of the bismuth phosphate process for recovering plutonium from natural uranium fuel. In the past 16 years the building has been modified for the purpose of demonstrating several different separations processes, e.g., the Redox process for recovering plutonium and uranium from natural uranium fuel, the 25 process for recovering U^{235} from U^{235}-aluminum alloy fuel, the Purex process for recovering plutonium and uranium from natural uranium, and the Thorex process for recovering U^{233} and thorium from irradiated thorium fuel. The use of the facility will be expanded so that a variety of fuels can be separated and decontaminated by solvent extraction, e.g., low-enrichment uranium, medium-enrichment uranium containing small amounts of plutonium, full-enrichment uranium, thorium containing large amounts of U^{235} and U^{233}, and certain special programs such as the separation of americium and curium from plutonium. Building limitations restrict the fuel charging and dissolution facilities that can be provided; therefore large fuel elements, such as are used in the power reactors, will be dissolved in Bldg. 2527 and will be received in Bldg. 3019 in aqueous solution for the solvent extraction separations.

1.2 Location and Distance from Other Facilities

Figure I-1 is a map of the ORNL area and shows the arrangement, location, and building number of all buildings adjacent to Bldg. 3019. The positions of Bldg. 3019 and its two service stacks are shown on the red overlay. The discharge stack for all cell ventilation air (3020 stack) is located 100 ft to the north of Bldg. 3019, while the discharge stack for all process off-gas (3039 stack) is located 315 ft southeast of the building. The buildings and facilities immediately adjacent to Bldg. 3019 are:

Bldg. No.	Building Use	Location Relative to Bldg. 3019		Activity Inventory, curies
		Distance, ft	Direction	
3019	Radiochemical processing	0	-	10^5-10^7
3001	Graphite Reactor	15	East	2×10^7
3042	ORR	245	East	1.0×10^8
3025	Solid State	100	Southeast	10^6
3022	Engineering and Mechanical	100	South	0
2010	Cafeteria	210	Southwest	0
2005	Welding and metallurgy	185	West	0
3074	Field shop	30	North	0
3017	ORSORT laboratory	180	North	Negligible
3013	Isotopes development laboratory	200	North	Negligible
3002	Pile filter house	150	Northeast	0

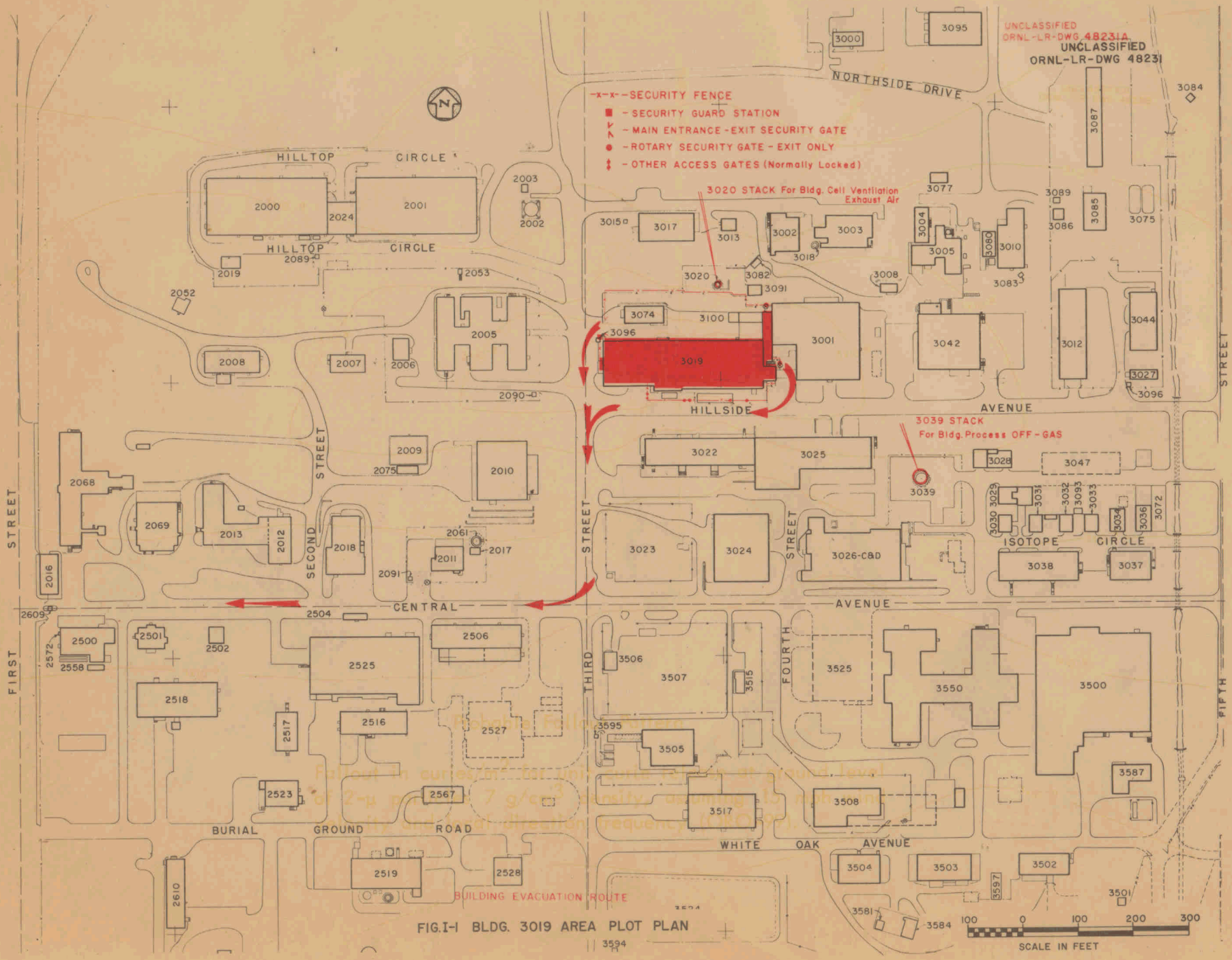

FIG. I-1 BLDG. 3019 AREA PLOT PLAN

1.3 Building Description and Area Classifications

The physical arrangement, identification, and general construction of the various areas, Bldg. 3019, are shown in Figs. 1-2 through 5 (see also Part II, Volatility Section). All cells are of poured reinforced concrete construction; have shielding thicknesses of 5 ft on the north, east, and west sides and 4 ft on the south side and across the top; and are considered to have sufficient strength to withstand an inner wall explosive shock pressure of 900 lb/sq ft. The construction in the various supporting areas which surround the cell block structure consists of poured concrete floors, either mortared concrete block or metal side and partition walls, and built-up composition and metal deck type roofing.

For process containment and personnel protection, the areas are classified into three general categories: primary containment (red overlays on Figs. 1-2 through 5), secondary containment (green overlays), and unrestricted areas. Primary containment areas are defined as those areas which normally house all process equipment handling radioactive materials. Personnel access to these areas is not permitted during process operations. Secondary containment areas are defined as the supporting areas, which surround or contain the exterior faces of primary containment areas that contain piping or other forms of penetrations. Makeup and metering equipment for nonradioactive process reagents, process service headers, instrument transmitters, and process sampling and fuel element charging mechanisms are examples of the equipment located in secondary containment areas. Personnel access to these areas is permissible on a restricted basis. While some form of entrance control is required at all entrances to secondary containment areas, specific details of clothing, instruments, and procedures vary considerably with the extent or probable extent of the contamination zone in a particular area. Those supporting areas which surround either secondary containment areas or those faces of primary containment areas that have no piping or access penetrations are termed "unrestricted" areas. Personnel access requirements are not needed for such areas, since there are no direct connections from primary containment areas and therefore little probability for contamination.

1.4 Personnel Control

The number of people normally employed in Bldg. 3019 and the immediately adjacent buildings are:

	No of Occupants	
Bldg. No.	Weekdays	Nights and Weekends, per shift
3019	94	12
3001	40	4
3042	75	8
3025	85	0
3022	120	0

UNCLASSIFIED
ORNL-LR-DWG 47848 B
UNCLASSIFIED
ORNL-LR-DWG 47848 A

UNCLASSIFIED
ORNL-LR-DWG 47848

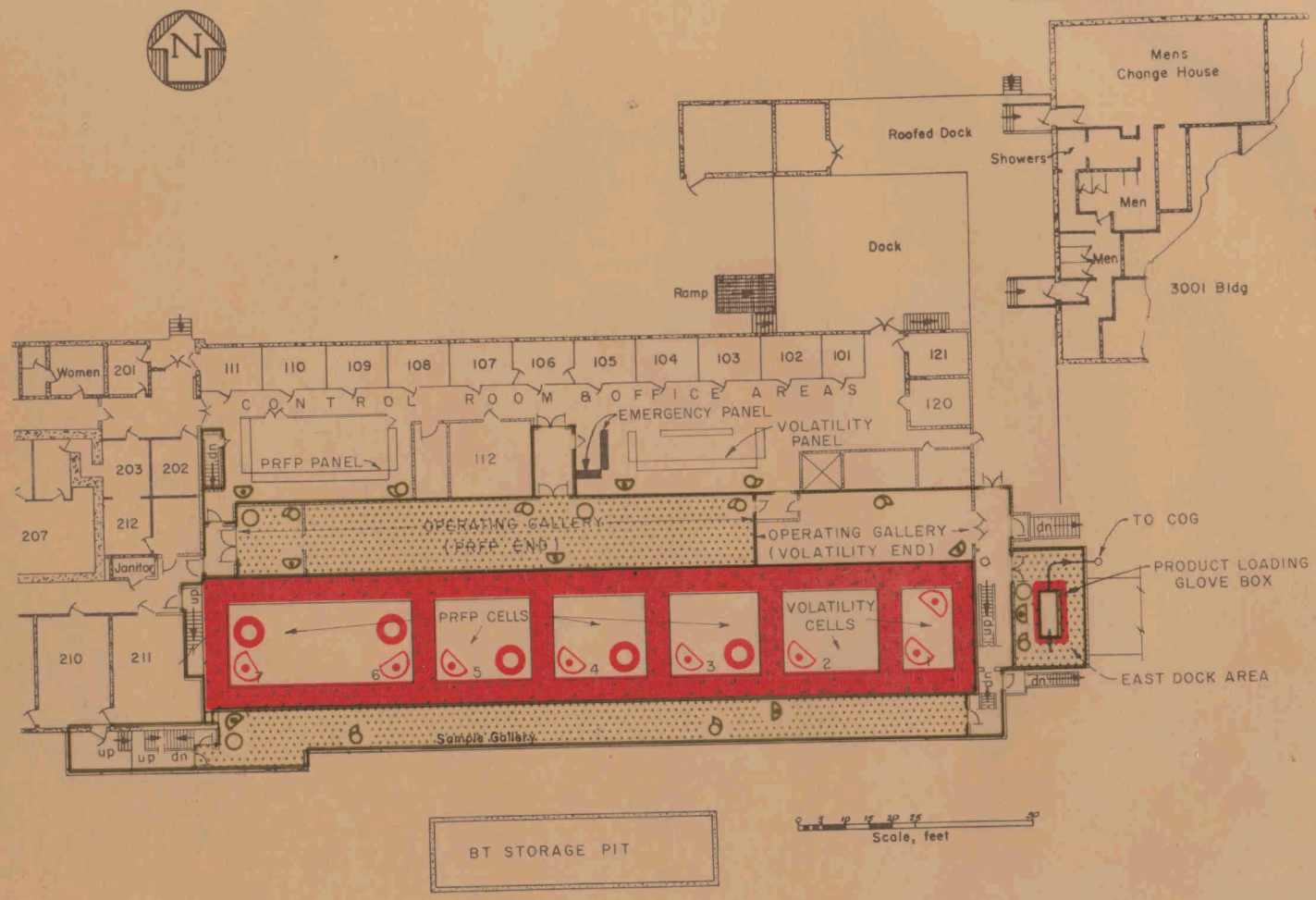

GAMMA RADIATION MONITOR

NEUTRON MONITOR

CONTAMINATION ZONE LIMITS

PERSONNEL CHECK POINTS

GAMMA RADIATION MONITOR

AIRBORNE PARTICULATE ACTIVITY MONITOR

FIG. 1-2 MAIN FLOOR PLAN - BLDG. 3019

LIMITS OF PRIMARY CONTAINMENT

LIMITS OF SECONDARY CONTAINMENT

UNCLASSIFIED
ORNL-LR DWG 47378 A RI

UNCLASSIFIED
ORNL-LR DWG 47378 B RI

UNCLASSIFIED
ORNL-LR-Dwg. 47378RI

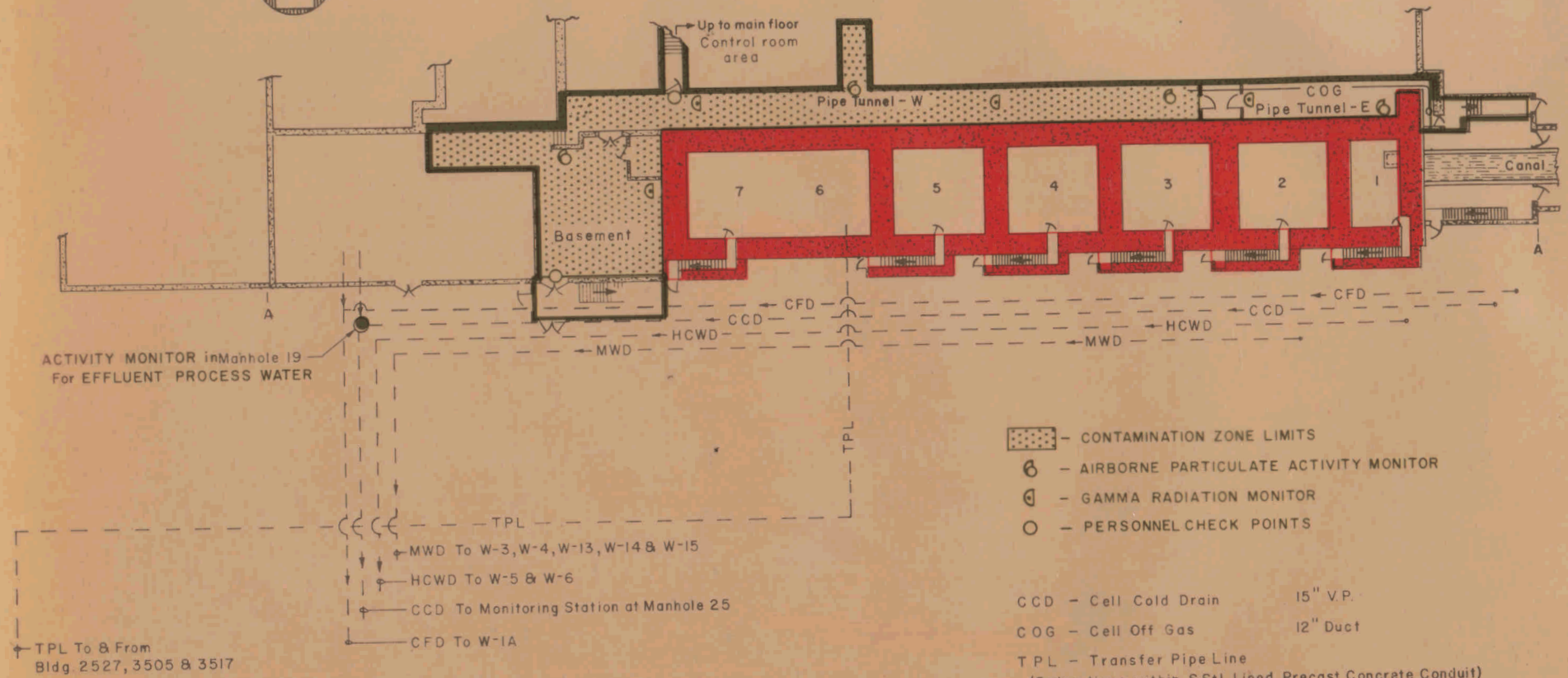

- CONTAMINATION ZONE LIMITS
- AIRBORNE PARTICULATE ACTIVITY MONITOR
- GAMMA RADIATION MONITOR
- PERSONNEL CHECK POINTS

CCD	- Cell Cold Drain	15" V.P.
COG	- Cell Off Gas	12" Duct
TPL	- Transfer Pipe Line (5 pipe lines within S.Stl. Lined Precast Concrete Conduit)	
CFD	- Cell Floor Drain	6" C.W.
HCWD	- Hot Chemical Waste Drain	3" S.Stl.
MWD	- Metal Waste Drain	3" S.Stl.

FIG. I-3. BASEMENT - PIPE TUNNEL FLOOR PLAN BLDG. 3019

(SHOWING BUILDING DRAINAGE SYSTEMS)

LIMITS OF SECONDARY CONTAINMENT

LIMITS OF PRIMARY CONTAINMENT

UNCLASSIFIED
ORNL-LR DWG 47379-A R1

UNCLASSIFIED
LR-DWG. 47379-R1

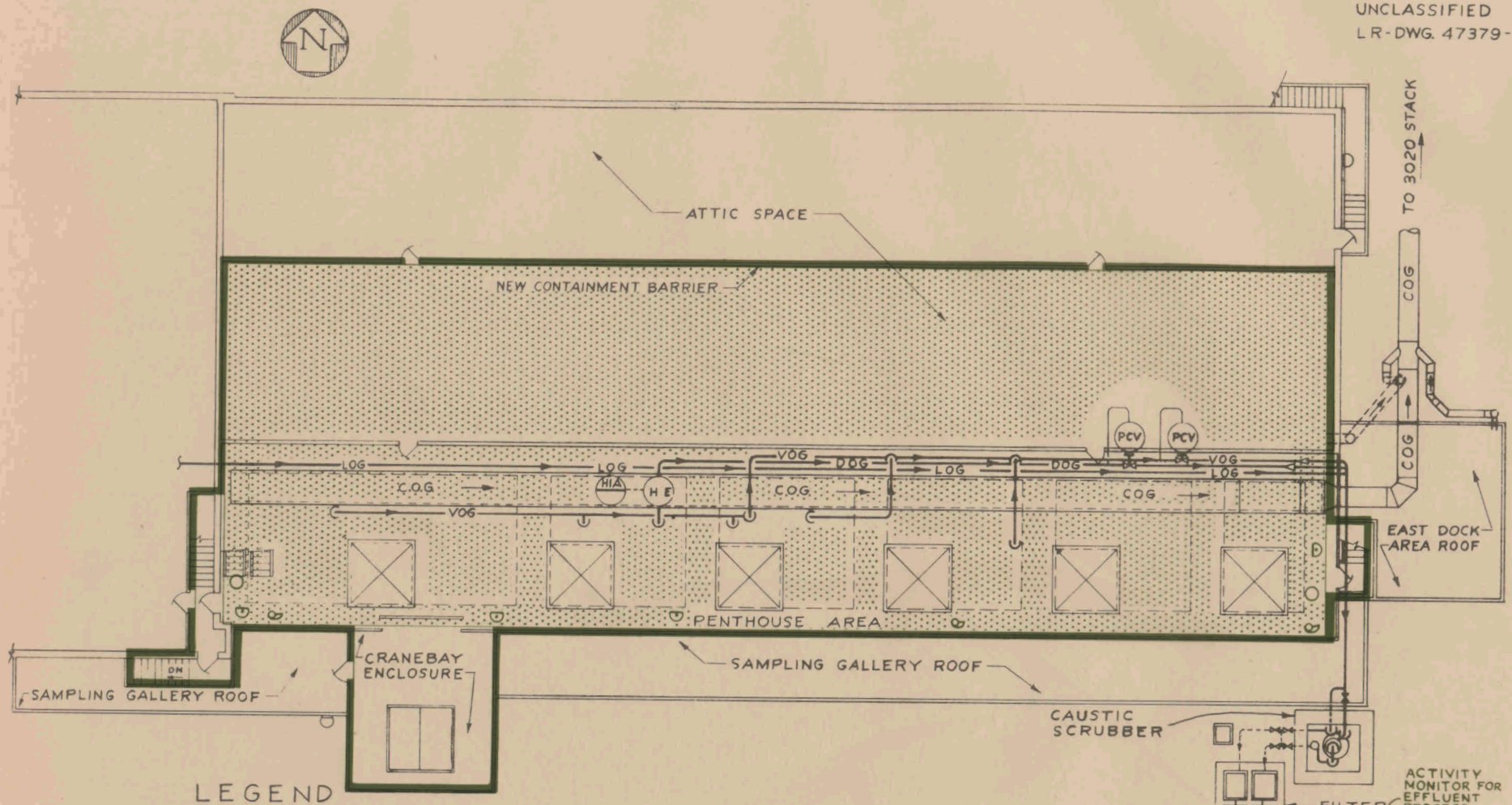

LEGEND

HEADER DESIGNATION

COG__CELL OFF GAS (60"x50" & 36" DIA. DUCT)
DOG__DISSOLVER OFF GAS (2" & 4" PIPE)
LOG__ANALYTICAL LABORATORY OFF GAS (4" PIPE)
VOG__VESSEL OFF GAS (4" & 6" PIPE)

INSTRUMENT DESIGNATIONS

HE__HYDROGEN DETECTION ELEMENT
HIA__HYDROGEN INDICATING & ALARM RECEIVER
PCV__PRESSURE CONTROL VALVE

CONTAMINATION ZONE LIMITS
AIRBORNE PARTICULATE ACTIVITY MONITOR
GAMMA RADIATION MONITOR
PERSONNEL CHECK POINTS

LIMITS OF SECONDARY CONTAINMENT

FIG. I-4. PENTHOUSE - ATTIC PLAN OF BLDG. 3019

UNCLASSIFIED
ORNL LR DWG 47380 A

UNCLASSIFIED
ORNL-LR-DWG 47380R1

UNCLASSIFIED
ORNL-LR DWG 47380 B

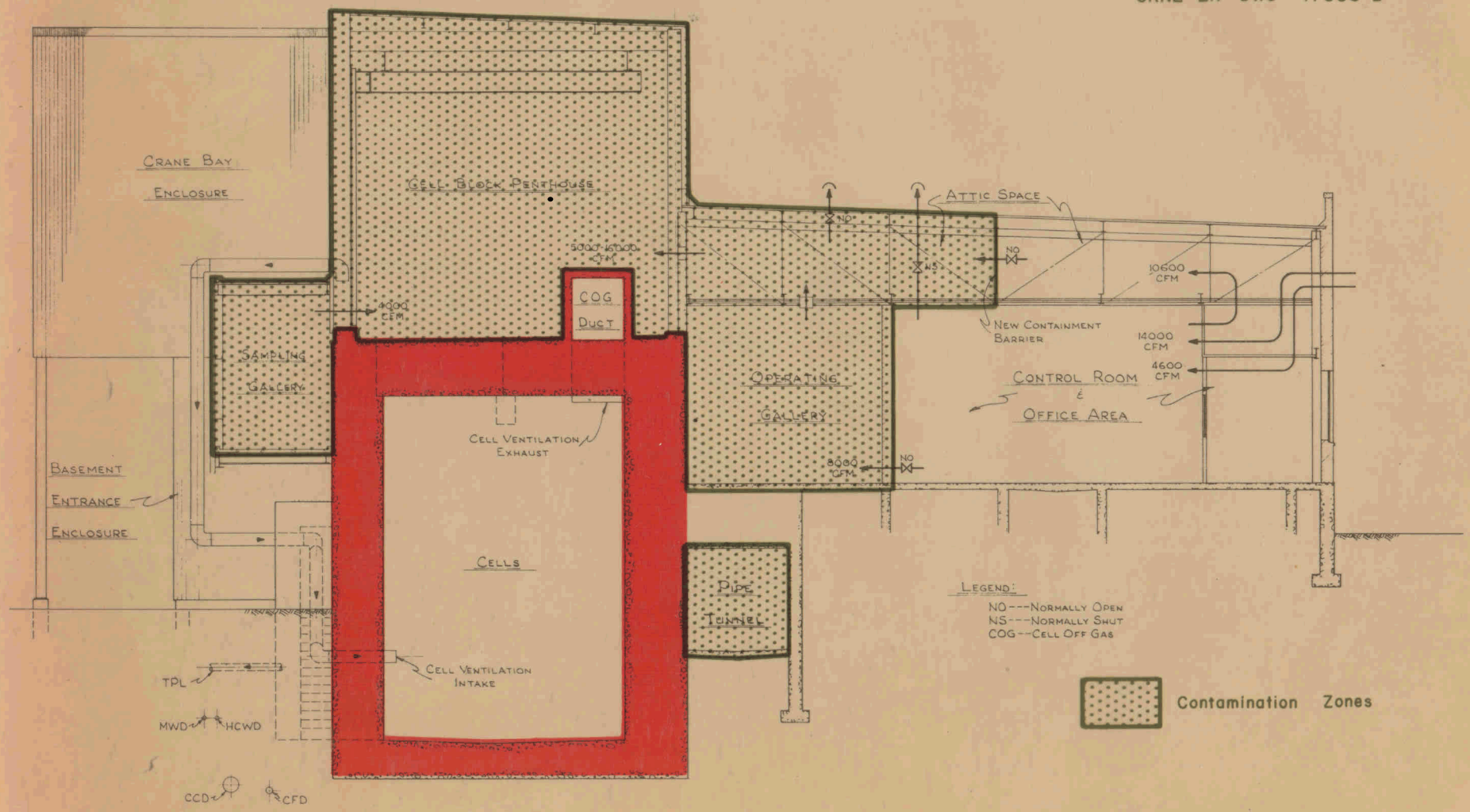

Fig 1-5 Transverse Section Bldg 3019

LIMITS OF PRIMARY CONTAINMENT

LIMITS OF SECONDARY CONTAINMENT

Bldg. No.	No. of Occupants	
	Weekdays	Nights and Weekends, per shift
2010	20 - 180[a]	0
2005	49	0
3074	19	0
3017	0 - 40	0
3013	2	0
3002	0	0

[a]Average occupancy during noon meal.

The red overlay of Fig. I-1 outlines the location of the security fence which surrounds Bldg. 3019 and the planned emergency evacuation route for all building personnel. A security guard post, manned on a 24-hr shift basis, is located at the main entrance to the security fence at the northwest corner of the building. The area enclosed by the security fence also serves as a radiation control or regulated zone in that building personnel are not allowed to walk out of this area wearing radiation protective clothing. In the event of a building emergency, all personnel leave the building and assemble at the west end of the building. In the event of an area-wide emergency, all personnel leave the area via the emergency route indicated and assemble outside the west portal or main security entrance to the ORNL area.

1.5 Process Description

In the future, the solvent extraction facility will be used to demonstrate a variety of solvent extraction processes on a pilot plant scale. The schematic process flowsheet (Fig. I-6) indicates the principal equipment pieces and the general flow of various feed materials through the plant. Operations involving very highly radioactive material will be confined to cell 5: fuel dissolution, solvent extraction feed preparation, the separation and concentration of the major fission product activity, and the reworking of waste streams that contain appreciable quantities of valuable material. The fissionable and fertile materials will be separated from one another by solvent extraction in cell 6. The fertile material will be concentrated by evaporation and adjusted to the proper solution composition for further decontamination by solvent extraction in cell 7. Solutions containing fissionable material will not be concentrated but will be adjusted by chemical addition to the proper conditions for further decontamination. The solvent extraction equipment located in cell 7 will handle material that contains relatively small amounts of fission products. Product solutions containing thorium or low-enrichment uranium will be concentrated by evaporation after a second cycle of solvent extraction. The concentrated thorium product will be stored in 10,000-gallon tanks, and the concentrated low-enrichment uranium product will be transferred to Bldg. 3505 for additional processing.

UNCLASSIFIED
ORNL-LR-DWG 48074RI

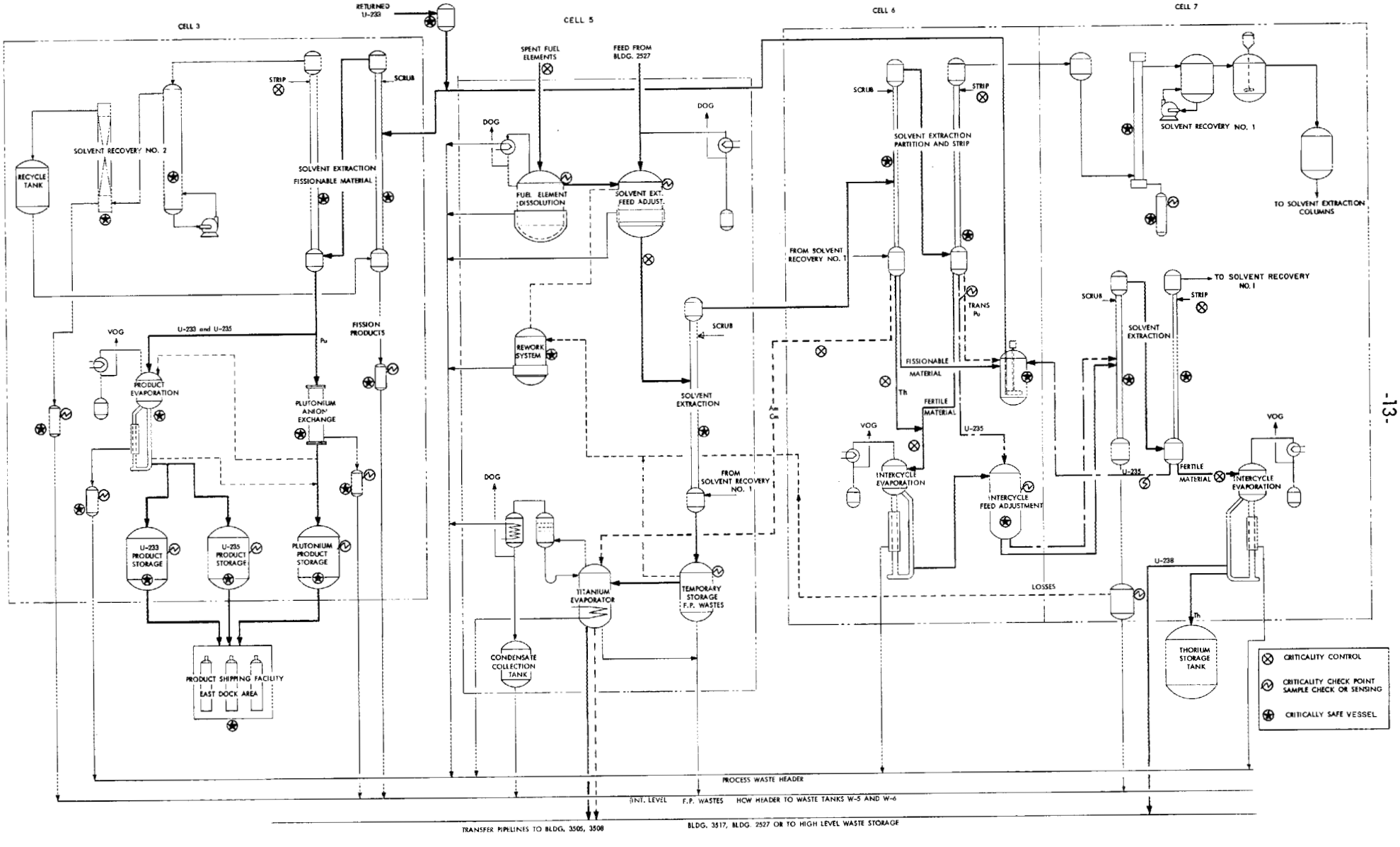

FIG. I-6 SCHEMATIC PROCESS FLOWSHEET - 3019 SOLVENT EXTRACTION FACILITY

Fissionable materials (e.g., plutonium, U^{233}, U^{235}, and mixtures of U^{233} and U^{235}) will receive further decontamination from fission products in the equipment in cell 3. After a second cycle solvent extraction step in the cell 3 columns, the plutonium product will be subjected to an anion exchange treatment for further purification and concentration. The U^{233}, after second cycle extraction, and the U^{235}, after third cycle extraction in cell 3, will be concentrated by evaporation in a critically safe evaporator and stored temporarily prior to shipment. All concentrated solutions of fissionable materials will be transferred to geometrically safe shipping containers in the product shipping facility located in the east dock area.

1.6 Criticality

Processing rates for fissionable materials may be as high as 14 kg of U^{235} per day; therefore the problem of nuclear safety (criticality) must be considered. The nuclear materials will be contained behind the massive concrete shielding walls of the processing cells until such time as the radioactive fission products have been removed. When the fissionable material has been decontaminated sufficiently to present no hazard from penetrating radiation, it will be removed from the processing cells and placed in geometrically safe shipping containers. The criticality control provisions are indicated by symbols on the schematic process flowsheet (Fig. 1-6). Batch size, flow rate, or flow is controlled at the indicated criticality control points. Density, composition (i.e., by sampling), or neutron multiplication is measured at the indicated criticality check points. Vessels that are rendered critically safe by virtue of geometry or fixed poisons are also indicated.

1.7 Liquid Waste Systems

Building 3019 is serviced by five liquid waste drainage systems (Fig. 1-3). Four of these systems were installed at the time of the original building construction (1944): a stainless steel "hot" chemical waste drain (HCWD), a stainless steel metal-waste drain (MWD), a duriron cell-floor drain (CFD), and a vitrified tile cell "cold" drain (CCD). The transfer pipeline system (TPL) consists of five or six quality fabricated 304L pipe lines within a stainless steel-lined concrete conduit. This system was installed in 1958 for the purpose of integrating the new head-end pilot plant (Bldg. 2527), the Metal Recovery Building (3505), the Multipurpose Fission Product Pilot Plant (Bldg. 3517), and Bldg. 3019 into a versatile Power Reactor Fuel Processing complex. Some of the transfers planned for this system include (a) discharge of concentrated high-level Power Reactor Fuel Processing wastes to the Bldg. 2527 waste storage system, (b) discharge of second cycle natural uranium product to the Metal Recovery Building, and (c) receipt of Darex and Sulfex dissolution products from Bldg. 2527.

The HCWD and MWD systems service the Bldg. 3019 cell areas and discharge by gravity flow to existing storage facilities in the ORNL tank farm area. Only intermediate-level radioactive wastes can be discharged to either of these systems, since the existing tank farm facilities are not equipped to handle the fission product heat generated by

high-level Power Reactor Fuel Processing wastes. The MWD system is used only when the wastes contain salvageable quantities of natural uranium or thorium.

The CFD and CCD systems will be modified to exclude use by all other buildings in the Bldg. 3019 area. When so modified, the CFD system will service the pipe tunnel and basement floor drains and the radioactive sinks for the analytical laboratories as well as the cell floor drains. Similarly, the CCD system will service the floor drains for all other secondary containment areas, all unrestricted areas, and all nonradioactive sinks in the building in addition to all cooling water and condensate effluents from all cell or radiochemical processing equipment. Since radioactivity is not normally introduced into this system, its effluent is normally discharged directly to the Clinch River. Two activity monitors, one in junction box No. 19 (green overlay of Fig. 1-3) and a second at junction box No. 25 in the tank farm area, are being installed in this system to sound an alarm in the event of an accidental activity release. The automatic diversion of this stream and the handling and storage procedures for all effluents from the HCWD, MWD, and CFD systems are all in the ORNL tank farm area and are described elsewhere.

1.8 Gaseous Waste Systems

Building 3019 is serviced by two off-gas systems: (1) a cell ventilation off-gas system (COG) which discharges to the 3020 stack and (2) a process off-gas system (POG) which discharges to the 3039 stack. The red overlay of Fig. 1-1 shows the location of these two discharge stacks. Both of these systems enter the building via the east end of the penthouse area (Fig. 1-4). All process off-gas will be directed through a caustic scrubbing and filtering station, located at the southeast corner of the building, before leaving the building area. The additional treatment which the COG and POG effluents receive in their respective stack areas is described elsewhere.

Within the building the POG system collects the discharge from three branch headers: (1) a dissolver off-gas header (DOG) which services the process dissolver, (2) a vessel off-gas header (VOG) which services all other radiochemical processing vessels and equipment, and (3) a laboratory off-gas header (LOG) which services the hoods in the analytical end of the building.

The control vacuum maintained within and the maximum capacity for each of the three systems that service the radiochemical processing end of the building are:

Header Designation	Control Vacuum, in. of water	Maximum Capacity, cfm
COG	1-1/2	20,000
VOG	3	250
DOG	6	50

The COG system is the primary motive force for all ventilation flow in the radiochemical processing end of the building. Filtered and conditioned ventilation air is introduced into the unrestricted areas on the north side of the building with conventional ventilation equipment. The principal exhaust for this ventilation air is that provided by the COG system, which draws the air in succession through all secondary containment areas and all primary containment areas before discharging it via the 3020 stack (Fig. 1-5). The flow pattern for all ventilation air from the south side of the building is the same as that described for the north side, except that here fresh ventilation air drawn from outside the building must be introduced directly to a secondary containment area (the sampling gallery). During normal process operations, all unrestricted areas will be maintained at a slightly positive pressure (0.05-0.10 in. water), all secondary containment areas at pressures varying from atmospheric to slightly negative, and all primary containment areas at a negative value of 1 to 1.5 in. of water. The ventilation equipment for all primary and secondary containment areas will be remotely operated from a central building emergency control panelboard (Fig. 1-2). This panelboard will contain an emergency scram system, which will automatically switch the building ventilation system to an emergency status and sound a general building alarm immediately following any accident, such as a cell explosion or criticality incident, which has a potential for discharging air-borne radioactivity from the cell or primary containment areas. During such emergency conditions, all ventilation intakes to primary and secondary containment areas will be closed and the pressure in all secondary containment areas will be reduced to a negative value of 0.3 in. of water. The negative pressure normally maintained in all primary containment areas will not be altered. The decrease in pressure in all secondary containment areas will be accomplished by means of several automatic throttling ports communicating directly from the penthouse area to the COG duct in this area. With automatic instrumentation and double door airlock vestibules on all entrances to secondary containment areas, it should be possible to attain a negative pressure of 0.3 in. within 15-30 sec after actuation of the scram system. All cell ventilation intake systems will contain backflow preventers capable of withstanding an explosion shock pressure of 900 lb/ft^2 and of reducing the backflow during such pressure excursions to 5% of the normal intake flow.

1.9 Monitoring Systems

Gamma radiation and neutron detection instruments will be located in each of the main primary containment or cell areas (see red overlay of Fig. 1-2). These devices will be wired for recording and for automatic actuation of the building emergency alarm and ventilation scram system in the event of an accidental nuclear excursion or criticality incident.

Gamma radiation and air-borne particulate activity monitors will be distributed throughout all secondary containment and unrestricted areas of the building (see green overlays of Figs. 1-2 through 4). These devices will be wired to alarm and indicate at the emergency panelboard. The air monitors will include alpha monitors as well as beta-gamma constant air monitors (CAM's). The information received from these instruments will be used to administer personnel access to all secondary containment areas and as a basis for the manual actuation of the building alarm and ventilation scram system.

All gaseous and liquid waste streams leaving the building will be monitored for radioactivity immediately prior to release to the environment. For Bldg. 3019 this includes the cell "cold" drain or process water drainage system, the cell off-gas system, and the process off-gas system. Monitors for each of these discharge points will be provided by another division and are described more fully elsewhere.

The output from all three instruments will be wired to record and alarm on the building's emergency panelboard. Existing Chemical Technology Division monitors for the process water drain (junction box No. 19) and for the 3020 stack discharge will be retained as secondary safeguards. Of these five activity release monitors, only two are located near enough to show up on the attached building drawings (see green overlays of Figs. 1-3 and 4).

2.0 SUMMARY

2.1 Nuclear Safety Hazards

2.1.1 Maximum Radioactive Content of Facility

The various types of fuels or feed materials which may be processed in the Bldg. 3019 solvent extraction facilities under future processing programs are:

Type of Feed Materials, Fissionable Material	Plant Capacity, kg/day		Inventories for Mixed Nonvolatile Fission Products, curies	
	Fertile Material	Fissionable Material[a]	In Plant[b]	In Waste Evaporator
Irradiated uranium metal and fuels, Pu^{239}	300	0.7-1.0	$0.6-0.9 \times 10^6$	$0.4-0.6 \times 10^6$
Low enrichment uranium fuels,[c] U^{235}	300	4-14	4-8	3-6
Medium enrichment uranium fuels,[d] U^{235}	25	5	0.25	0.06
Irradiated thorium metal, U^{233}	120	0.4	1.6	1.1
Thorium-uranium fuels,[e] U^{235}	120	2-11	3-8	2-6
Special Pu-Al alloys, Pu^{239}	-	0.4	0.5	0.2

[a]Maximum inventories for each fissionable material will be restricted to 60 kg by the sizing of the product storage vessel for each material.

[b]These inventories are equivalent to 10-12 days of plant throughput.

[c]Includes NMSR, FWC-EC, EGCR, and CPPD power reactor fuels.

[d]Includes non-domestic research reactor fuels.

[e]Includes CETR, Rural Cooperative, and Borax IV power reactor fuels.

The inventories for the gaseous fission products, I^{131} and Kr^{85}, are not listed since they are not considered to be significant hazards. Only the irradiated uranium, thorium, and Pu-Al alloy fuels will be dissolved in Bldg. 3019. I^{131} will decay to negligible levels in the 6-month decay period prior to dissolution, while in-plant inventories for Kr^{85} are not expected to exceed 200 curies.

The maximum in-plant inventories for fissionable materials and mixed nonvolatile fission products do not greatly exceed the maximum inventories for the largest holdup or collection vessel for each class of material. This means that the maximum potential hazard for the plant would involve some form of explosive or disruptive occurrence in one or the other of these two collection systems. The maximum holdup for mixed nonvolatile fission products occurs in the high-activity-level waste evaporator (N-50) and can attain a value as high as 6×10^6 curies under some of the power reactor fuel processing programs. The maximum holdup for each fissionable material is in the final product storage vessel for each material and can attain a value as high as 60 kg. Since the mpc value for Pu^{239} is considerably lower than the value for U^{233} and U^{235}, the product storage vessel for Pu^{239} (X-17) represents the maximum potential hazard for a fissionable material release. The location, size, and maximum hazard potential for each of these two vessels is:

	Plutonium Storage Vessel (X-17)	High Activity Level Waste Evaporator (N-50)
General location	Cell 3	Cell 5
Size	3 ft dia x 4 ft high (225 gal)	4 ft dia x 6 ft high (550 gal)
Maximum holdup	60 kg (4500 curies) of plutonium product consisting of 15% Pu^{240} in Pu^{239}; mixed fission product activity is negligible	Mixed fission product inventory attaining a maximum value of 6×10^6 curies during the processing of the CETR fuel; presence of gaseous fission products and alpha active materials is negligible
Maximum concentration	100 g/liter, equivalent to 7.5×10^{-6} curie/mg of solution	1.1×10^4 curies/liter (30 g/liter)or 1.1×10^{-2} curie/mg
Criticality control	Fixed poisons: fire polished borosilicate glass rings containing 6% boron and measuring 1.25 i.d. x 1.50 o.d. x 1.75 in. long	None; administrative procedures will prohibit the introduction of gram amounts of fissionable materials
Location in cell	3 ft above floor and 1 ft from south face	2 ft above floor and 1 ft from south face

	Plutonium Storage Vessel (X-17)	High Activity Level Waste Evaporator (N-50)
Point of maximum radiation exposure	South face under sampling gallery, 8 ft from center of vessel with 5 ft of normal concrete shielding (diagonal routing through 4-ft wall involved)	(a) Penthouse, 28 ft from center of concentrate volume with 4 ft of normal concrete shielding; (b) south side entrance, 8 ft from center of concentrate volume with 4.5 ft of normal concrete shielding (diagonal routing through 4-ft wall involved)
Maximum credible disrupting or dispersing force	Criticality incident or a radiolytic hydrogen and air explosion	Explosion of radiolytic hydrogen and air or of the nitration products of tributyl phosphate

Any of three different types of explosive events might conceivably disrupt and disperse the contents of these two maximum hazard potential vessels: (1) an explosion involving the nitration products of TBP; (2) an explosion involving radiolytic hydrogen and air; and (3) a criticality or nuclear excursion. An explosion involving radiolytic hydrogen appears to be credible for each vessel in view of the fact that continuous purge or dilution procedures may not be entirely effective because of "channeling" or poor mixing effects. In view of the concentration control restriction associated with the use of a fixed poison for criticality control in the fissionable material product storage vessels, a nuclear excursion appears to be credible for any of these vessels. While the raffinate from the first cycle extraction column passes through several collection vessels, a phase separator, and a steam stripper before entering the high activity waste evaporator, it is still credible for small quantities of TBP to enter this vessel. The maximum credible magnitude for each of these three explosive events is:

		Max Disruptive Effects		
Type of Incident	Max Magnitude and Basis of Limitation	Total Energy, Btu	Shock Pressure at 15 ft, psf	Volume Release, ft^3
Criticality incident	10^{18} fissions terminated by vessel rupture	30,000	<800[a]	~100[b]

[a]It is assumed that no more than 10% of the total energy release appears as a shock wave.

[b]It is assumed that 10% of the energy release is effective in producing steam; a greater percentage conversion to steam would terminate the incident at a level below 10^{18} fissions.

Type of Incident	Max Magnitude and Basis of Limitation	Max Disruptive Effects: Energy, Btu	Shock Pressure at 15 ft, psf	Volume Release, ft^3
Radiolytic hydrogen and oxygen	10 scf of a stoichiometric hydrogen-air mixture; channeling and poor mixing effects may not give uniform dilution within vapor spaces of vessels involved	860	<800	~90
Nitration products formed by reaction of nitric acid and TBP	Products formed from 1 gal of a 30% TBP-Amsco mixture (~3 lb TNT); upstream decanters and steam strippers and evaporator operating restrictions will not be totally effective	5,700	800[c]	~100

[c]Fifty percent of the total energy release will appear as a shock wave.

2.2 Evaluation of a Maximum Credible Criticality Incident Release*

Calculations have been performed to evaluate the consequences of the maximum credible criticality incident for the Bldg. 3019 Solvent Extraction Facility, namely, a criticality incident in the plutonium storage vessel of cell 3.

If a criticality event should occur, both gaseous fission products (I, Kr, Xe, etc.) and air-borne particulate activity would be formed and released to the environment. Three avenues of escape are possible: (1) vessel off-gas system and stack which service the vessel, (2) cell ventilation system and stack which service the cell in which the vessel is located, and (3) porosity and piping connections which penetrate the shielding walls of the cell involved. In the latter case, the activity is released into the secondary containment zone that surrounds the cell. It is assumed that this release will be uniformly diluted by the air volume in the secondary containment zone and that all personnel can escape from the zone in a 2-min time interval. The release of radioactivity through the exterior sides of the containment zone has been calculated on two different bases: (1) that the ventilation scram system for the building will perform

*Calculations and assumptions are given in Volume I of this report.

satisfactorily, i.e. that the static pressure in the secondary zone will be reduced to a negative value of 0.3 in. H_2O in a 20-sec time interval following the excursion; and (2) that the ventilation scram system does not function. The general characteristics of the ventilation systems and the vessel off-gas and cell ventilation exhaust systems that service Bldg. 3019 are:

Item or System	Characteristics
Cell dimensions*	19 x 20 x 27 ft high with 5 ft of normal concrete shielding available on all sides except top and south side, where thickness is 4 ft
Cell ventilation system	Cell volume is 10,000 cu ft; when sealed for process operation, a negative static pressure of 1.5 in. H_2O (gage) and a ventilation flow of 1150 cfm (13% as extraneous inleakage) are maintained within
Secondary containment area ventilation system	Combined volume of such spaces totals 210,000 cu ft; building scram instrumentation will automatically close all ventilation intakes and open special throttling ports communicating into the cell ventilation exhaust system; system will function to reduce the static pressure in all areas from 0 to 0.3 in. H_2O (gage) within 20 sec; during emergencies, all building inleakage (6000 cfm) will be exhausted via the cell ventilation exhaust system described below; negative pressure normally maintained in all operating cells will not be altered
Cell ventilation exhaust	Contains a filter pit (deep bed roughing plus absolute filtration) and discharges into 3020 stack (dilution factor of 2.3×10^{-5} sec/m^3); minimum building-to-stack-residence time for effluent ventilation air is 30 sec (12,000 cfm flow); system will be instrumented to maintain a controlled vacuum of 1.5 in. H_2O in all operating or sealed cells
Vessel off-gas exhaust system	Contains local treatment facilities (caustic scrubbing plus absolute filtration) and stack treatment facilities (caustic scrubbing, silver contacting, and absolute filtration), and discharges into 3039 stack (dilution factor 1.6×10^{-5} sec/m^3);minimum building-to-stack-residence time for effluent gases is 150 sec (300 cfm flow); system maintains a vacuum of 3-6 in. H_2O on all building process equipment.

*Cells 6 and 7 have the same overall dimensions but are not separated by a partition wall.

Twenty-one millicuries of plutonium activity would be rendered air-borne within cell 3 by the maximum credible criticality incident. A maximum integrated "neutron plus prompt gamma" radiation dose of 140 mrem could be incurred at the point of maximum exposure on the outer face of the cell (tabulation on p. 19). The magnitude and consequences of the various particulate activity releases that would result from the incident are:

Release or Escape Route	Total Amount Released, curies	Maximum Downwind Integrated Dose, mrem	Distance Downwind of Stack or Building to Maximum Integrated Dose, m
Vessel off-gas release (3039 stack)	5.4×10^{-3}	4.3	1760
Cell off-gas release (3020 stack)	3×10^{-2}	3.5	1760
Into secondary containment zone	3.1×10^{-6}	31[a]	-
Through siding of secondary containment assuming ventilation scram system works[b]	2.0×10^{-8}	nil	150
Through siding of secondary containment, assuming ventilation scram system does not work	3.0×10^{-6}	2.5	150

[a] Integrated over a 2-min interval only.
[b] Based on a leak rate of 3×10^{-2} volumes/minute.
These releases are orders of magnitude below the hazardous level and would not require any decontamination of the ground on the downwind side.

The gaseous fission product releases that result from the incident are of considerably greater significance but do not exceed 250 mrem:

Type of Integrated Dose	Particulate Dose, mrem	Gaseous FP Dose, mrem
Maximum downwind of VOG stack (3039)	4.3	222
Maximum downwind of COG stack (3020)	3.5	150
2-min dose in secondary containment zone	31	177
Maximum downwind of building (3019)*	nil	nil

*Assumes building ventilation scram system works and a leak rate of 3×10^{-2} volumes/minute.

2.3 Solvent Explosion and Fire Hazard

2.3.1 Evaluation of Hazard Potential

The maximum fire and explosion potential for the Bldg. 3019 solvent extraction facility is determined by the flammability and explosion characteristics of the diluent used in the process solvent for all extraction operations. This diluent is described as a high grade kerosene and is purchased under the trade name of Amsco 125-82. While its exact chemical composition is not known, it is generally believed to contain about 5% straight chain paraffin hydrocarbons, 45% branched chain paraffins, and 50% napthas. The general flammability and explosion characteristics of this material are:

Energy release on combustion	19,000 Btu/lb
Max theoretical flame temperature on combustion	4000°F
Max theoretical air consumption for combustion	200 scf/lb
Explosive limits in air	0.7 - 7%
Closed cup flash point	128 - 132°F

The total in-plant inventory for all process solvents will not exceed 1000 gal, no more than 50% of which will ever be in the cells at any one time. The remainder will be located in makeup and recycle collection vessels in the basement and operating gallery areas of the building. The maximum in-cell inventory is in the solvent recovery equipment in cell 7. The maximum inventory for this cell should never exceed 500 gal. The fact that the process solvent will contain significant amounts of tributyl phosphate, which is a much less volatile material than Amsco, means that the maximum hazard potential for the process solvent will be somewhat less than that indicated for Amsco. The composition of TBP in the process solvent varies with the process flowsheet used for the various solvent extraction feed materials and will probably be somewhere between 10 and 40 volume %.

2.3.2 Preventive Safeguards

The fire and explosion hazards posed by a maximum in-cell solvent inventory of 500 gal are so great that any possibility of containing even a minor incident, let alone a maximum credible incident, is completely out of the question. This means that strict preventive measures, rather than a combination of preventive and containment measures, must be applied in combating these hazards. The preventive measures, warning instrumentation, and emergency procedures proposed for each of these in-cell hazards are:

Explosion Hazard Safeguards	Fire Hazard Safeguards
Only explosion-proof electrical fixtures, wiring, and motors will be used in all such areas	Only explosion-proof electrical fixtures, wiring, and motors will be used in all such areas

Explosion Hazard Safeguards

All in-cell solvent holdup equipment, including the enlarged top section of each extraction column, will be equipped with recording-alarm type temperature instrumentation; all alarms will be set for actuation at temperatures not to exceed 125°F; only minor modifications to existing instrumentation will be required to obtain this additional safeguard

Administrative control and operating procedures for the plant will include provisions designed to prevent accidental or unintentional heating of process solvents to temperatures above 125°F

The atmosphere in each cell will be continuously analyzed for organic vapor content by infrared analysis capable of indicating concentrations in parts per million; a minimum of two points will be sampled in each area; sampling points will be located near the floor, preferably near floor drainage collection points and in poorly ventilated areas; the output of these instruments will be recorded at the emergency panelboard and will sound an alarm when the vapor concentration exceeds 100 ppm (lower explosive limit is 7000 ppm); a more detailed description of the analyzer instrumentation is given in Sect. 6.1; emergency procedures to be followed when an instrument alarms are outlined in Sect. 8.5.

Fire Hazard Safeguards

A minimum of two "rate-of-temperature" detection devices will be located in each area; preferable locations are near the ceiling and near the ventilation exhaust port or ports for the area; the devices will be wired to sound an alarm at the emergency panelboard (see Sect. 8.6 for emergency procedures) and to automatically shut down ventilation air intake system to the cell involved

Flame arrestors of 40 mesh screen will be included in all ventilation exhaust ports from such areas to prevent flame propagation beyond the confines of the cell involved

A thermocouple will be installed in the cell ventilation exhaust duct leaving the building and will be instrumented for continuous recording at the emergency panelboard and to sound an alarm when the temperature of the cell exhaust air exceeds 150°F; the filter elements in the filter pit for the system will withstand temperatures as high as 200-250°F (see Sect. 8.6 for emergency procedures)

Manually operated water spray systems will be installed in all solvent handling cells (refer to Sect. 6.1 for a more detailed description of the system and to Sect. 8.6 for criticality considerations regarding use)

2.4 Evaluation of a Maximum Credible Explosion Release

Calculations show that the maximum credible explosion release will occur as the result of an explosion in the plutonium storage vessel of cell 3 rather than in the high-activity-level waste evaporator of cell 5. The magnitude and consequences of such a maximum credible explosion release are therefore identical to the particulate release associated with the maximum credible criticality incident (tabulation on p. 22).

An explosion in the high-activity-level waste evaporator is the second most hazardous maximum credible explosive incident. Calculations indicate that 31 curies of mixed nonvolatile fission products would be released in cell 5 as the result of such an incident. The magnitude and consequences of the particulate activity release that would result from the incident are:

Release or Escape Route	Total Amount Released, curies	Maximum Downwind Integrated Dose, mrem	Distance Downwind of Stack or Building to Maximum Integrated Dose, m
Vessel off-gas system (3039 stack)	0.80	1.9	1760
Cell off-gas system (3020 stack)	0.43	1.5	1760
Into secondary containment zone	4.5×10^{-3}	14[a]	-
Through siding of secondary containment, assuming ventilation scram system works	3.1×10^{-4}	nil	150
Through siding of secondary containment, assuming ventilation scram system does not work	4.5×10^{-3}	0.11	150

[a]Integrated over a 2-min interval only.
[b]Based on a leak rate of 3×10^{-2} volumes/minute.

These maximum integrated exposures are observed to be a good factor of 2 lower than those listed for the plutonium vessel explosion (p. 22).)

Shielding calculations indicate that the maximum gamma radiation doses that occur at the exterior face of the cell when the evaporator is filled to capacity with maximum specific activity waste are not serious hazards. The two points of maximum radiation exposure for the evaporator are defined on p. 19. The maximum dose rate for the penthouse location is 7 mrem/hr, and that for the south entrance to the cell is 25 mrem/hr. The radiation level in the south entrance is not objectionable since personnel will not be allowed to enter this area during process operations. The exposure at the outside face of the entrance is of no concern, since the outboard sides of the entrance contain 2 ft of additional concrete shielding.

2.5 Comparison of Hazards for Credible Accidents

The maximum credible accident for the Bldg. 3019 solvent extraction facility would result if a nuclear excursion or criticality incident occurred in the 60-kg plutonium product storage vessel of cell 3. Second to this would be the accident which would result if an explosion involving a mixture of radiolytic hydrogen and air occurred in

this same plutonium storage vessel. The third most hazardous accident would involve some form of an explosive occurrence, either radiolytic hydrogen and air or the nitration product formed from TBP, in the high-activity-level waste evaporator in cell 5. The origin, location, and magnitude of the maximum integrated exposure for each type of accident are:

Criticality Incident Within the Plutonium Storage Vessel (Cell 3)	
Air-borne release: downwind of the vessel off-gas stack (3039 stack)	226 mrem
Neutron plus prompt gamma: at cell face under sampling gallery on the south side of the cell	140 mrem
Explosive Incident in Plutonium Storage Vessel (Cell 3)	
Air-borne release: 2-min exposure in the secondary containment zone	31 mrem
Explosive Incident in Waste Evaporator (Cell 5)	
Air-borne release: 2-min exposure in the secondary containment zone	14 mrem
Gamma radiation: floor of penthouse directly over the evaporator	7 mr/hr

Part II. FLUORIDE VOLATILITY PROCESS FACILITY

1.0 INTRODUCTION

1.1 Purpose and Uses

This facility, located in and around cells 1 and 2 of Bldg. 3019, is used in the development of the ORNL Fluoride Volatility process for recovering uranium from zirconium-uranium alloy nuclear submarine fuels and from homogeneous fused salt fuels. The history of this building is detailed in Sect. 1.1 of Part I. In 1955, installation of the original Volatility Pilot Plant was begun, and recovery of enriched uranium from homogeneous fused salt fuels from the Aircraft Reactor Experiment and from two zero-power experiments was completed in 1958. Modifications required for processing zirconium-uranium fuels are nearly completed. After test runs with nonirradiated fuel, portions of the S1W-1, S1W-2, and S1W-3A (first core from the STR, and first two cores from the Nautilus) will be processed. Material to be processed is high-enrichment high-burnup uranium-zirconium or uranium-Zircaloy-2 alloy clad in the same materials and fabricated as plate elements.

1.2 Location and Distance from Other Facilities

The information presented in Sect. 1.2 of Part I is equally applicable for the Volatility Pilot Plant except that the activity inventory anticipated is 50,000 curies.

1.3 Building Descriptions and Area Classifications

(See Sect. 1.3 of Part I.) The containment plan shown in Figs. I-2, 3 (Part I) was modified during Volatility Pilot Plant occupancy to downgrade cell 2 to a secondary containment area. Figure II-1 shows the radiation zone control plan.

1.4 Personnel Control

See corresponding section of Part I.

1.5 Process Description

Basically, the Fluoride Volatility process consists in volatilizing the uranium from a fluoride salt melt as UF_6, removing most of the volatile fission product fluorides in a NaF sorption-desorption cycle, and collecting the purified UF_6 in cold traps as a solid which is liquefied and draining into product cylinders. In the process now being studied, zirconium-uranium nuclear submarine reactor fuel elements will be dissolved with anhydrous HF while the fuel elements are submerged in a $NaF-LiF-ZrF_4$ melt at temperatures of 650-500°C. After dissolution, UF_6 will be evolved by reaction with elemental fluorine at 500°C (Fig. II-2).

UNCLASSIFIED
ORNL-LR DWG. 48229

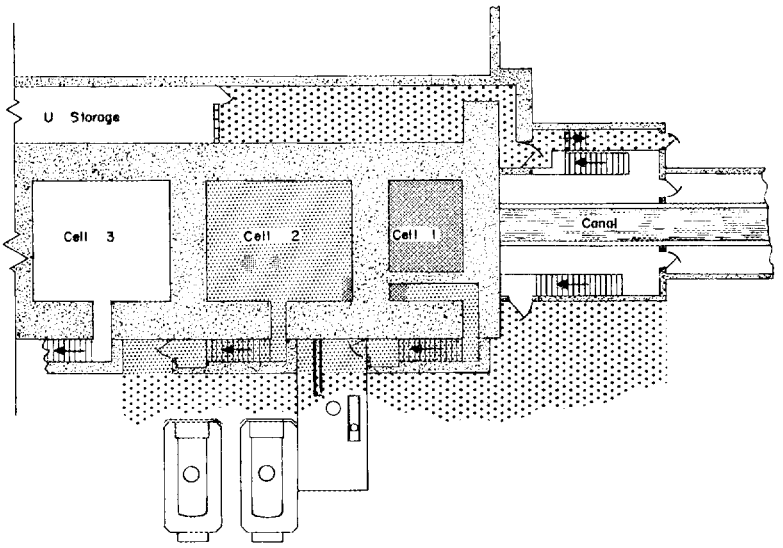

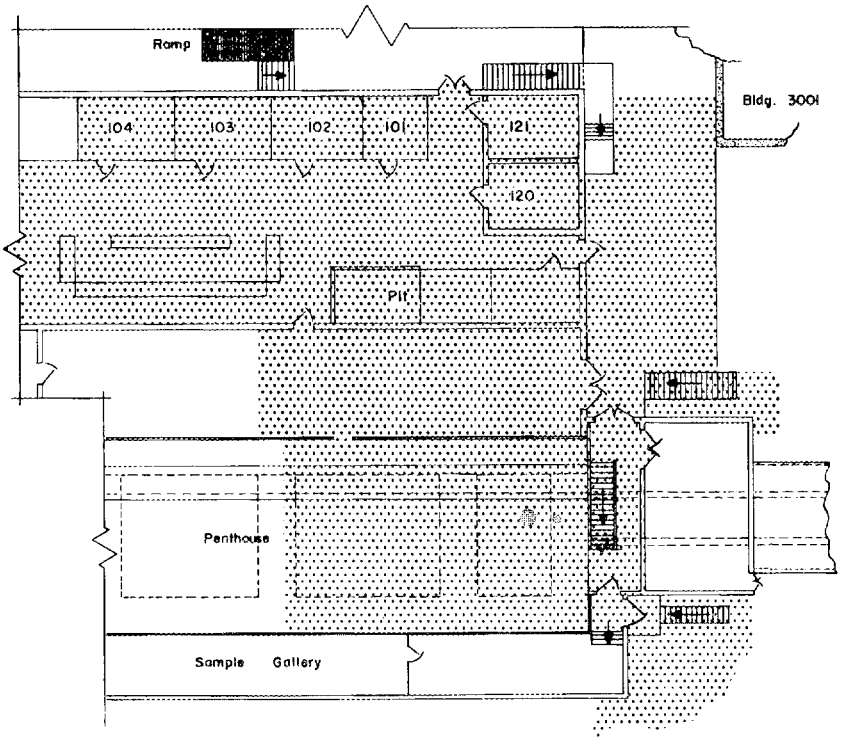

KEY

Contamination - Free; both C-Zone and Street Clothing Permitted

C-Zone

R-Zone; in Cells 1 & 2, These Are Also C-Zones

FIG. II-1 VOLATILITY PILOT PLANT ZONES

UNCLASSIFIED
ORNL-LR-DWG 39254

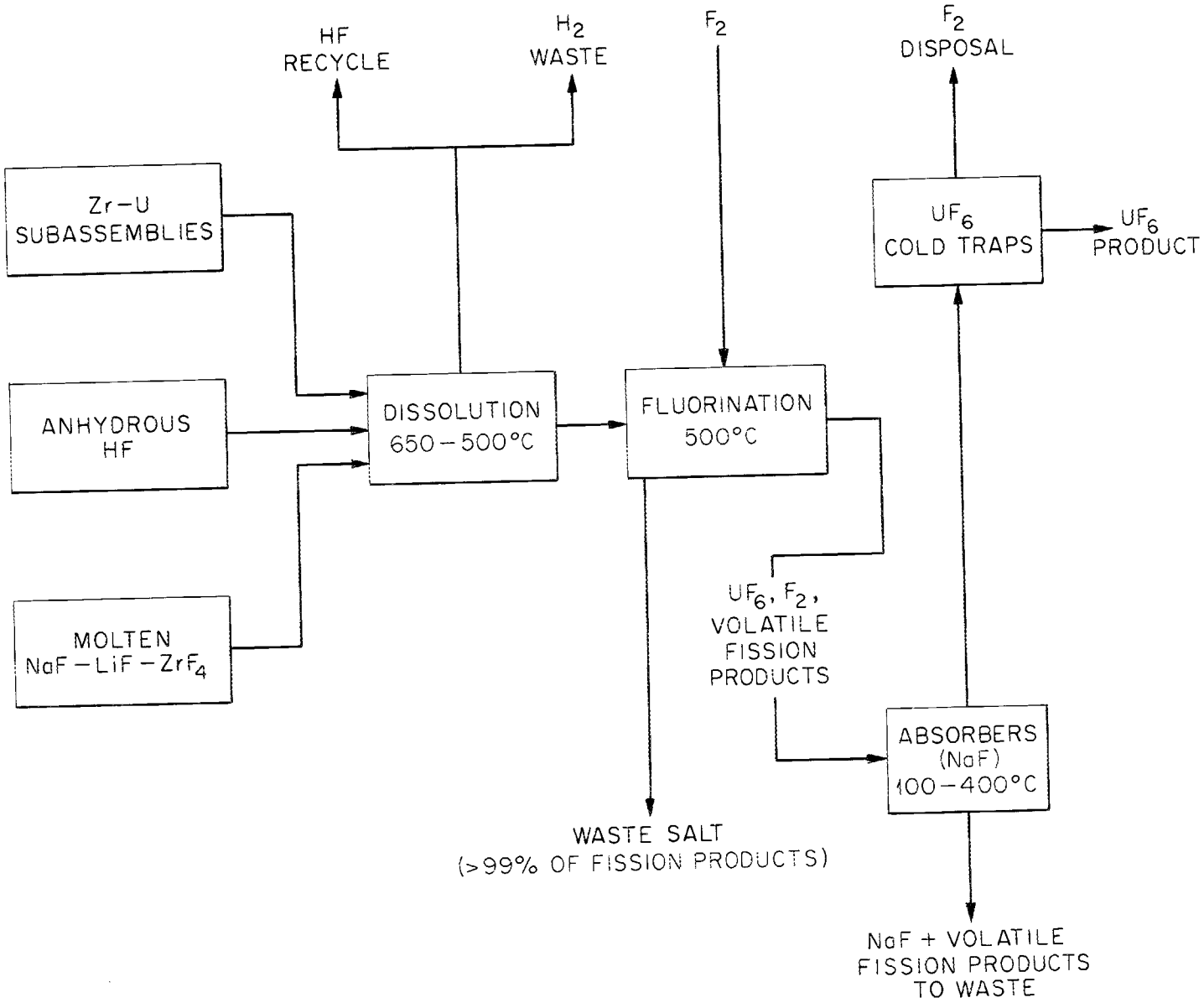

Fig. II-2. Volatility Process Simplified Flowsheet.

1.6 Criticality

Since the Volatility Pilot Plant system may contain at one time only 3.5 kg of U^{235} and the maximum permissible mass value for U^{235} as a dry salt is 43 kg, no criticality problem exists during normal processing. This maximum permissible safe mass value assumes essentially no hydrogen mixed with the uranium, thin-walled containers, water moderation, and uranium density up to 3 g/cc. After completion of a program, a water flush of the system to recover any uranium holdup may be used. Since the reflected maximum permissible safe mass of U^{235} in water solution is only 800 g, criticality problems must be given careful consideration during flushing operations. All vessels in which criticality incidents could occur are located behind 4-5 ft of concrete shielding.

1.7 Liquid Waste Systems

There are three classes of liquid waste in the Volatility Pilot Plant: (1) aqueous KOH-KF which has been used for fluorine or HF neutralization, (2) cooling water from refrigeration units, and (3) steam condensate from vessel jackets.

At the end of a run, after all remaining HF has been neutralized, the KOH-KF solution may contain 2.5 to 10.5 curies of gamma activity. Aqueous KOH is also used in the fluorine disposal system. Initially, this system contains approximately 500 liters of 2 *M* KOH solution; the solution is discharged only after the KOH strength has been decreased to approximately 0.5 *M*, which requires several runs. Even with several pessimistic assumptions, the activity in the latter solution is expected to be only 2.9×10^6 dis/min·ml. Potassium hydroxide-potassium fluoride solution from both disposal units will be discharged to the radioactive chemical drain system in Bldg. 3019 for discharge into tank W-5 in the ORNL tank farm.

Cooling water from the refrigeration units is, in all cases, separated by intermediate refrigerant circuits and consequently should never be radioactive. This stream will be discharged to the cell nonradioactive ("cold") drain (CCD, also known as the Process Waste Water System). Steam condensate is discharged from only two vessels in the Volatility Pilot Plant, the jacket on the caustic neutralizer used to heat decontaminating solutions and the jacket surrounding the HF vaporizer. During normal operations, the steam condensate line from the former vessel is cut off and there is no flow. During decontamination programs, the steam condensate goes to a CCD in cell 2. The latter vessel is heated by steam whenever HF is being recirculated, and condensate is also discharged into a cell 2 CCD. This is a possible source of contamination to the extent of an estimated maximum of 5 curies of activity if a complete charge of HF should leak into the vaporizer jacket.

1.8 Gaseous Waste Systems

One primary system handling cell ventilation air and two secondary systems for HF and fluorine disposal are used in the Volatility Pilot Plant. Section 1.8 of Part I describes

the overall building ventilation system and the way in which filtered air is made available for the penthouse or secondary containment area. From the penthouse, air is drawn through ducts to the bottom of cells 1A, 1, and 2 (Fig. II-3). Since cell 1 is a primary containment area, a backflow preventer, filter, and damper are provided in the air inlet. After passing through the three cells, the ventilation air is scrubbed with aqueous KOH, filtered through a set of glass fiber roughing and "absolute" filters, and discharged from stack 3020. The HF disposal system has a water-cooled condenser operating at 4°C for recovering unconsumed HF. Nitrogen, hydrogen, and uncondensed HF are passed through a refrigerant (type 11) cooled chiller vent and are then bubbled through aqueous KOH to remove traces of HF. Remaining gases are discharged into the cell off-gas duct, where the hydrogen is diluted to below the explosion limit. The fluorine disposal system includes a sodium fluoride bed for trapping out trace quantities of UF_6 followed by a spray tower in which the fluorine is removed by aqueous KOH. The residual gas is discharged into the cell off-gas system immediately ahead of the cell off-gas scrubber.

1.9 Monitoring Systems

General monitoring of Bldg. 3019 for beta-gamma activity and airborne alpha activity and monitoring of gaseous and liquid waste streams leaving the building are described in Sect. 1.9 of Part I. Figure II-4 locates the various monitoring devices in the Volatility Pilot Plant.

Constant air monitors maintain surveillance over airborne beta-gamma activity. There will be four monitrons (one each in the penthouse, the pipe tunnel, the gallery, and the panelboard area) to continuously check gamma activity levels in areas other than cells. The cells themselves will be monitored by the building Victoreen monitoring system; this system consists essentially of ion chambers in the locations to be monitored, connected to a bank of meters and alarms in the operating area where the appropriate scales and alarm points are selected.

Airborne alpha activity will be monitored by continual alpha monitors, which draw air samples through strip filter paper. Air is drawn through the filter paper in cycles which can be varied from 10 minutes to several hours. At the end of a cycle, the filter paper is automatically moved under the counting head. During the next cycle, the alpha activity of the section of filter paper through which air has been drawn is recorded by a count rate meter, and another air sample is pulled through an adjacent portion of the filter strip. Two of the three continuous alpha monitors are piped up in such a way that two areas are simultaneously monitored by one instrument; in the event of a release of activity, it will be necessary to valve off one of the two areas to definitely locate the source of trouble, although the stage of operations will be indicative of the probable source of activity. One continuous alpha monitor will serve both cells 1 and 2, one will serve the penthouse and pipe tunnel, and the remaining one will maintain a check on the airborne alpha activity in the operating area.

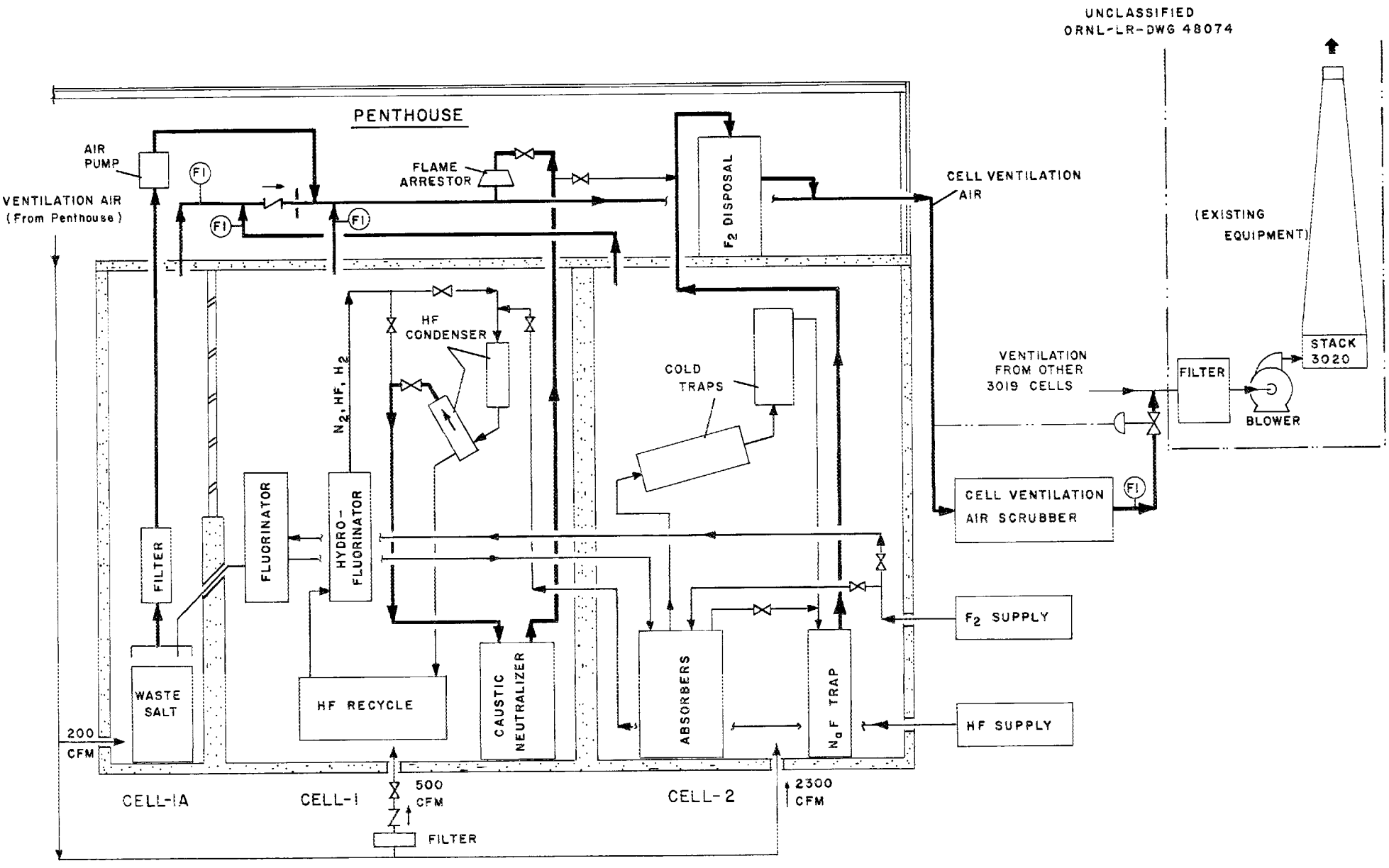

FIG. II-3 VPP GASEOUS WASTE DISPOSAL SYSTEM

UNCLASSIFIED
ORNL-LR DWG 48227

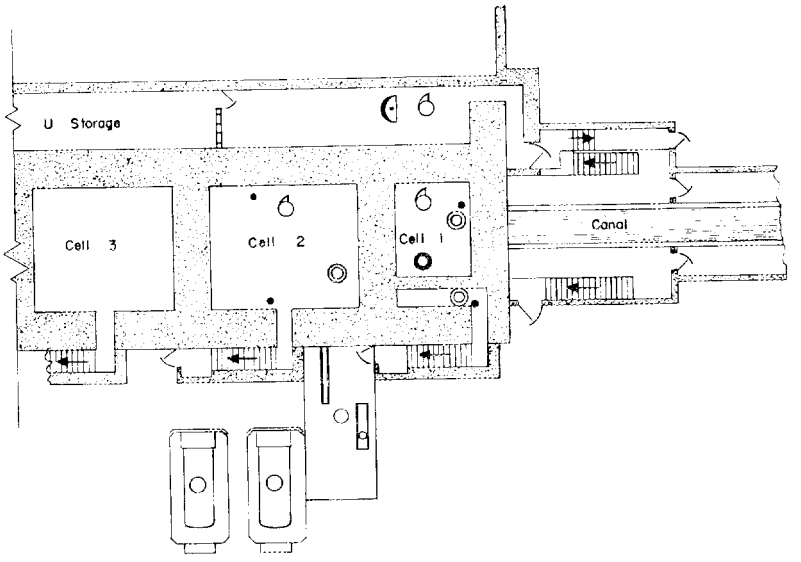

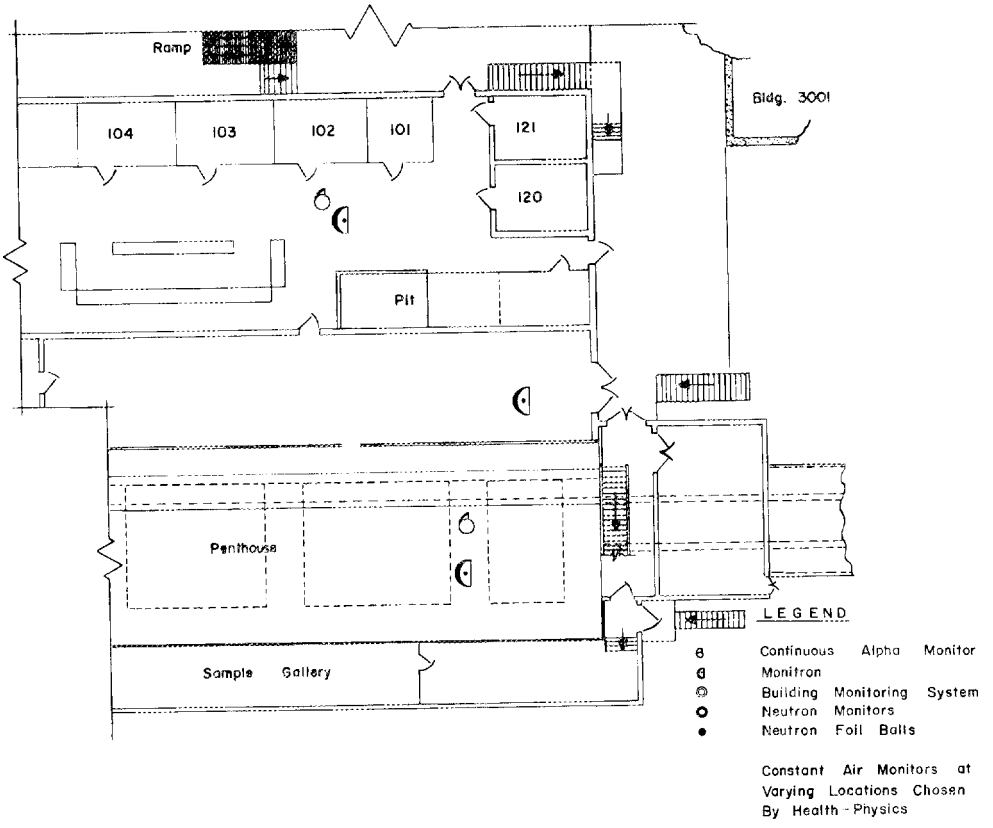

FIG. II-4 VOLATILITY PILOT PLANT RADIATION MONITORING

A neutron detection instrument will be located in cell 1 for use during water rinses of the hydrofluorinator and fluorinator—the only operations during which a criticality incident might conceivably occur. Because of the low probability of difficulty in cell 2, the building beta-gamma monitoring system will be relied on to indicate a criticality incident there. Two neutron foil balls will also be located in each cell. They will be attached to chains for convenient semiremote removal after an incident; neutron flux level may be estimated by determining the radioactivity induced in the various foils contained in the balls.

Continuous fluoride analyzers will sample the ventilation air leaving the cells to indicate leaks which would probably also release radioactivity to the cells.

2.0 SUMMARY

2.1 Nuclear Safety Hazards

2.1.1 Maximum Radioactive Material Content of Facility

Material	Design Capacity, per dissolution	Inventory	
		In Plant	In Largest Vessel
Iodine-131, curies	-	-	-
Krypton-85, curies	100	74	74*
Mixed nonvolatile fission products, curies	5,000	5,000	5,000
Heavy elements			
Pu^{239}, kg	0.001	0.010	0.001
U^{235}, kg	0.300	3.5	
U^{238}, kg	-	-	-
U^{233}, kg	-	-	-
Th^{232} (irradiated), kg	-	-	-
Am^{241}, curies	-	-	-
Others, curies	-	-	-

2.1.2 Criticality Incident Potential

	Fissionable Isotope	Enrichment	Design Capacity, kg/day	Shield	Type of Controls Used
Main process	U^{235}	~90%	300 g/dissolution	4-5 ft of concrete	Batch and geometry
Equipment water rinse	U^{235}	~90%	3.5 kg/cold trapping	4-5 ft of concrete	Concentration, poisoning, material balance

*Calculations and assumptions are given in Volume 1 of this report.

2.1.3 Effects of Nuclear Reaction of 10^{18} Fissions Followed by Rupture of Vessel, Building 3019, Volatility Section*

	Aerosol Release	Gaseous fp Release
Maximum downwind integrated dose from VOG release, rem	-	-
Maximum downwind integrated dose from COG release, rem	<0.001	0.097
2-min dose from secondary containment shell, rem	<0.001	0.144
Maximum downwind integrated dose from building release, rem	<0.001	<0.001
Neutron + prompt gamma dose, rem	(1.9**)	

*Cell 1, during clean-up.
**Through 4-ft concrete shield.

2.2 Explosion and Fire Hazards

2.2.1 Description of Combustible or Explosive Material and Probable Reactions That Can Occur

Reaction of fluorine with an organic material is the chief fire hazard. Another possibility is evolution of hydrogen during dissolution of zirconium-uranium fuel elements with HF in molten $NaF-LiF-ZrF_4$.

2.2.2 Organics Control

No organic solvents are used in the process.

2.2.3 Specification of Lower Explosive Limits in Air

The lower explosive limit for H_2 in air is 4.1 volume %.

2.2.4 Inventory

a. Total inventory in plant. The maximum rate of hydrogen release is expected to be 6 cfm. Assuming no dilution, the maximum volume in each vessel is:

Hydrofluorinator (vapor space and charging chute at start of dissolution)	24 cu ft at 500°C = 8.9 cu ft at 60°F (15.5°C)
HF caustic neutralizer	5.4 cu ft
HF condenser	0.9 cu ft
HF chiller vent	~0.2 cu ft
Piping	~0.1 cu ft
Estimated total at ~60°F =	15.5 cu ft

b. Total inventory of hydrogen in largest single vessel. This value is 8.9 cu ft at 60°F.

2.2.5 Energy Release

a. Energy release = 61,000 Btu/lb H_2 at 60°F (gross) = 325 Btu/cu ft H_2 at 60°F (gross)

b. Total potential energy release in plant = 5040 Btu 1510 (30% H_2 in air)

c. Total potential energy release from largest tank = 2890 Btu 867 (30% H_2 in air)

2.2.6 Means of Preventing Explosion

a. Equipment that should minimize the possibility of a hydrogen explosion is (1) the HF caustic neutralizer through which the hydrogen must bubble; and (2) a C. M. Kemp Model F-1 flame arrestor equipped with twice the standard number of gauze and disk laminates in the hydrogen line discharging to the cell ventilation duct; and (3) the nitrogen-buffered double closure valve on the charging chute to the hydrofluorinator.

b. Nitrogen and helium are used as purge and blanket gases in vessels and piping that contain hydrogen.

c. The probability of an explosion is thought to be essentially zero because of the absence of an oxidant when hydrogen may be in the explosive range and the design features previously discussed.

2.2.7 Fire Prevention

A fluorine fire is the only credible fire in the radioactive areas of the plant. Such a fire would be extinguished by stopping the flow of fluorine. This may be done manually

and remotely at the control board, near the transmitter rack in the penthouse, and at the fluorine station. An automatic shutoff is provided which functions whenever the fluorine flow rate exceeds 56 slm (2 cfm). This may be by-passed only by a "dead man" switch, as the system is filled with fluorine. The entire system is carefully cleaned prior to the introduction of fluorine and conditioned with dilute fluorine according to recommended procedures. The only plastics used in contact with fluorine are a few Teflon or Kel-F valve disks and gaskets, which are also carefully cleaned and preconditioned.

Building 3019 is equipped with a 1-1/2-in. NPS standpipe and hose system, first aid fire extinguishers, and a fire alarm box on the north side of the building, which are available for a fire in the nonradioactive area of the building.

The maximum energy release by a fluorine fire is not readily calculable since the supply of fuel is unknown. Fluorine can burn practically any substance, including nickel or iron pipe, if an organic compound is present to initiate a fire and concentrations of fluorine are high enough. Heats of reaction are similar to those for oxygen:

Reaction	Heat of Reaction
$F_2 + Ni = NiF_2$	$\Delta H = -240{,}000$ Btu/lb mole F_2
$O_2 + 2Ni = 2NiO$	$\Delta H = -210{,}000$ Btu/lb mole O_2
$CH_4 + 4F_2 = CF_4 + 4HF$	$\Delta H = -181{,}000$ Btu/lb mole F_2
$2CH_4 + 4O_2 = 2CO_2 + 4H_2O$	$\Delta H = -173{,}000$ Btu/lb mole O_2

The probability of a major fire around the fluorine control rack in the nonradioactive area outside the cells is high. Several small fires have previously occurred during similar operations. However, operating experience and an increasing awareness of the need for cleanliness should help avoid future fires. The probability of containing the results of a fire without serious spread of radioactive material is felt to be essentially 100%.

2.3 Evaluation of Noncriticality Event Leading to Release of Radioactive Material

2.3.1 Description of Cell and Vessel Involved in Credible Accident, Building 3019, Volatility Section

For this analysis a runaway reaction in the hydrofluorinator is assumed, resulting in the instantaneous release of 100 curies of Kr^{85}. This vessel has an overall capacity of about 24 cu ft, with the salt volume varying between 1.1 and 1.8 cu ft. Additional information required for this analysis is:

Vessel name	Hydrofluorinator
Vessel volume	24
Cell No.	1
Cell volume	4000 cu ft
Cell ventilation purge flow rate	500 cfm

	Analysis of Contents	Total Amount Vaporized or Suspended after Accident
Solution density, g/cc	3.2 at 500°C	
Pu^{239}, curies	0.6 (10 g)	
U^{235}, curies	6.7×10^{-4} (300 g)	
Pu^{238}, curies	8.3 (0.5 g)	
Mixed fp's, curies	50,000	
I^{131}, curies	-	
Kr^{85}, curies	100	100 (small cell) 100 (large cell)

2.3.2 Effects of Accidental Release of Radioactive Material from Maximum Credible Noncriticality Accident

The concentration of Kr^{85} in the secondary containment area is calculated to be less than the mpc in air of 1×10^{-5} μc/cc, and the 2-min dose is insignificant. The assumed release of Kr^{85} presents no hazard of any consequence:

	Kr^{85}
Cell off-gas release*	
Total amount, curies	100
Max downwind integrated dose, rem	0.0023
Distance downwind of max dose, m	1760
Release into secondary containment zone	
Total amount, curies	0.0125
Concentration, curies/m^3	2.1×10^{-6}
2-min dose to building personnel, rem	<0.001
Release from secondary containment zone* (assuming ventilation system works)	
Total amount released, curies	-
Maximum downwind dose, rem	<0.001
Distance downwind of max dose, m	150
Ground fallout at 20 m, curies/m^2	-
Release from secondary containment zone* (assuming ventilation system fails)	
Total amount released, curies	-
Max downwind integrated dose, rem	<0.001
Distance downwind of max dose, m	150
Ground fallout at 20 m, curies/m^2	-

*The fallout of particulate matter from this source is such that the ground will not exceed either the hazardous or required decontamination level.

3.0 DESCRIPTION OF BUILDING AND SERVICES

3.1 Building Description

3.1.1 General Layout, Occupancy, and Usage

Figure I-7 shows a main floor plan of Bldg. 3019. The areas at the west end of the main floor are occupied by the Analytical Chemistry Division and consist of analytical hot cells, analytical laboratories, a counting room, and offices. The areas at the east end of the floor are occupied by the Chemical Technology Division and consist of cells and the supporting areas required for radiochemical processing. Volatility processing is carried out in cells 1 and 2 at the east end of the building and solvent extraction processing in cells 3, 4, 5, 6, and 7. Each process operation has a separate process instrument control panelboard. Chemical Technology and Analytical Chemistry Division operating personnel for the building share a common change room facility, which is located in the northwest corner of Bldg. 3001 (see upper right hand corner of Fig. I-7).

Figure I-3 shows a partial floor plan of the various areas below the main floor level. The occupancy and usage of these areas are the same as those described for the main floor plan except that: (a) the area immediately west of that designated "basement" (west of cell 7) is temporarily occupied by the Metallurgy Division and (b) the canal access area east of cell 1 and south of the east entrance to the pipe tunnel is occupied by the Operations Division. Permanent concrete block walls define the limits of Chemical Technology Division responsibility in each of these two areas.

Figure I-4 is a partial plan of the various areas located above the main floor level of Bldg. 3019. Occupancy and usage at this level are the same as those described for the main floor except that the Chemical Technology Division currently uses a portion of the attic space over the analytical laboratories and west of cell 7 (i.e., over laboratories 208, 209, 210, and 211 of Fig. I-7) for a combination conference and lunch room. This portion of the attic space is partitioned off and separated from the remainder of the analytical laboratory attic space, which is occupied by ventilation equipment and miscellaneous equipment and instrument storage racks.

Figure I-5 shows a transverse sectional elevation of the radiochemical processing end of the building and is included to clarify the elevation arrangement of the various floor plans (Figs. I-2 through I-4).

The principal hazards in Bldg. 3019 are those associated with the radiochemical processing operations, which are performed in cells 1 through 7 and which are under the jurisdiction of the Chemical Technology Division. This report is therefore restricted to describing the structural and containment features, the processing facilities, and the hazards and safeguards associated with the radiochemical processing operations in this part of the building. Primary consideration is focused on the solvent extraction operations conducted in this area of the building, since the volatility operations are discussed in Part II of this report.

UNCLASSIFIED
ORNL-LR-DWG.47377

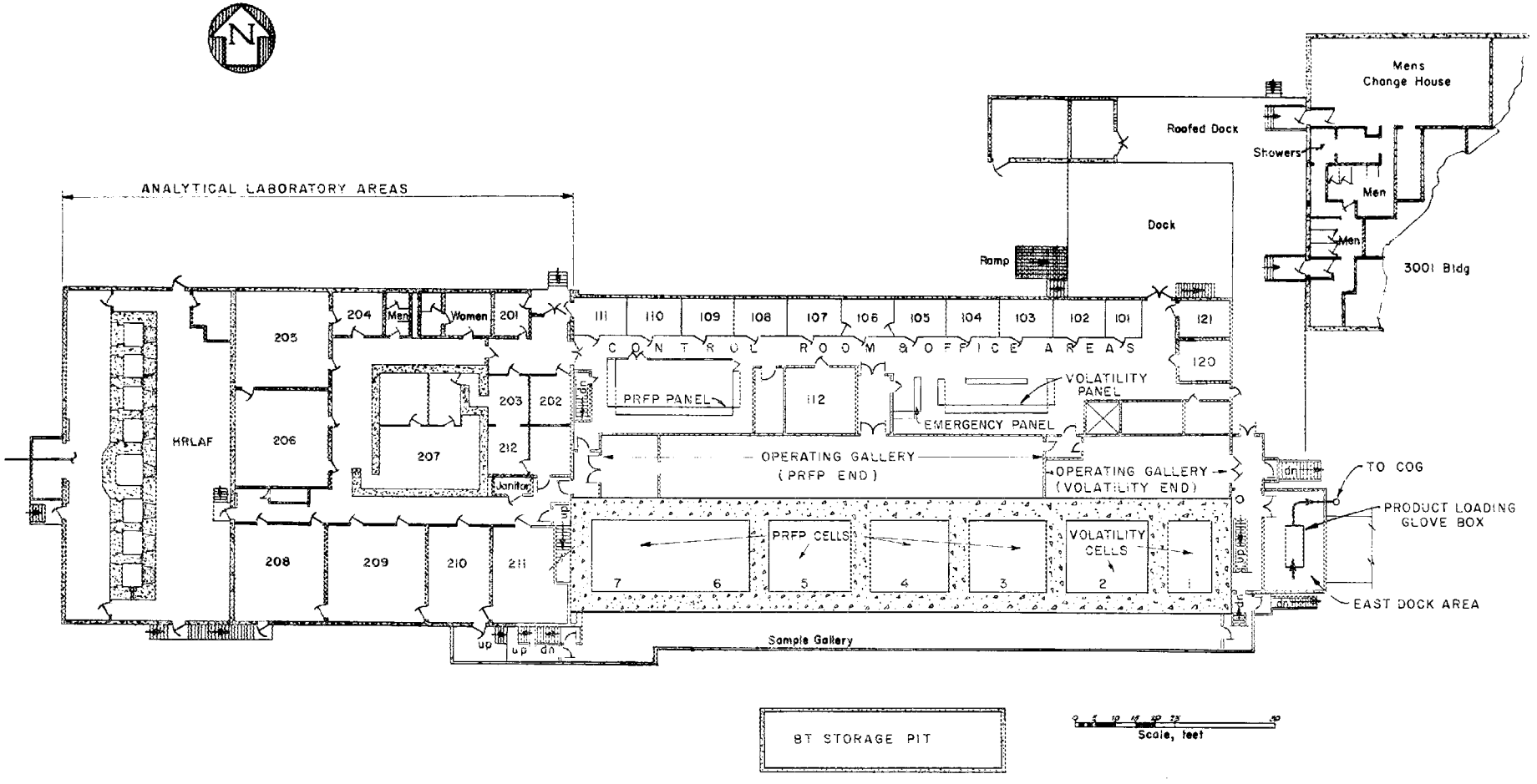

FIG. 1-7. MAIN FLOOR PLAN – BLDG.3019

3.1.2 Definition and Classification of Building Areas

Three general classifications of areas are recognized for the radiochemical processing section of the 3019 building: (a) primary containment areas, (b) secondary containment areas, and (c) unrestricted areas (see Table I-1). Primary containment areas are heavily shielded areas in which all processing equipment that handles radioactivity are located. Secondary containment areas are those which surround or contain the faces of primary containment areas through which piping connections are made. Unrestricted areas are those which surround either secondary containment areas or the unpenetrated faces of primary containment areas. Since there are no direct piping connections between primary containment and unrestricted areas, the probability of contaminating an unrestricted area is remote if basic ventilation requirements are maintained.

Table I-1. Classification of Building Areas

Area	Reference Figures
Primary containment	
Cells 3, 4, 5, 6, and 7	I-2
Product loading glove box (east dock)	I-2
Secondary containment	
Basement and west end of pipe tunnel	I-3 and I-5
Cell block penthouse area	I-4 and I-5
West end of operating gallery	I-2 and I-5
East dock area	I-2
South half of attic space	I-4 and I-5
Sampling gallery	I-2 and I-5
Unrestricted	
Control room and office areas	I-2 and I-5
North half of attic space	I-4 and I-5

3.1.3 Secondary Containment Area Equipment

There are four general classifications of equipment in secondary containment areas: (1) Equipment and piping which is not intended to handle radioactivity but which is subject to contamination by virtue of direct or indirect communication with the radiochemical processing equipment in the primary containment area, e.g., reagent makeup and metering equipment, instrument transmitters, and steam and water service headers. (2) Vulnerable radiochemical processing equipment which is brought outside the primary containment or cell area for maintenance, e.g., Lapp Pulsafeeder metering pumps, canned rotor centrifugal transfer pumps, and column pulsers. For this type of equipment, primary containment of the process is maintained by installing lead-shielded blisters about the radioactive end of each unit of equipment. (3) Gravity cascade head pots and condensers for low-activity-level process streams, which are brought out of the ceiling of the cell to obtain more efficient utilization of the head room in the cells or primary containment areas. The continuity of primary containment here is also maintained by installing lead-shielded blisters around the equipment. Blast shields are constructed over items

of equipment that are considered to be either structurally weak or potential process explosion points (the dissolver condenser). (4) Mechanisms for introducing fuel elements and withdrawing radioactive waste streams, fissionable and fertile product streams, and process samples. Since these operations all involve disrupting the primary containment, great care must be exercised in the design of such mechanisms and in the preparation of detailed operating procedures for each such point in the process.

3.1.4 Primary Containment Areas

Cells 3, 4, and 5 have internal dimensions of 20 x 19 x 27 ft high. Cells 6 and 7 form a combined area with dimensions 40 x 19 x 27 ft high. All cells are of poured reinforced concrete construction. The north face of all cells, the partition walls between cells, the east wall of cell 1, and the west wall of cell 7 are 5 ft thick. The south wall and ceiling of all cells are only 4 ft thick. The sides and ceiling about each entrance into the south side of the cell (Fig. I-3) are of poured concrete construction and are 2 ft thick. The cell ventilation exhaust duct located on top of the cell block structure (Figs. I-4 and I-5) is of reinforced concrete construction and 8 in. thick. The equipment access openings into the roof of each cell (Fig. I-4) are 9 x 9 ft. Each such opening is ordinarily sealed by a four-piece concrete shield plug arrangement having an overall thickness of 4 ft.

The floors of all five solvent extraction cells (3, 4, 5, 6, and 7) are lined with 11-gage stainless steel. The walls are lined with 16-gage stainless steel, the height varying from cell to cell. Cells 3 and 4 are lined to a height of 6 ft. Cell 5 is totally lined except for the areas immediately under the roof plug. Cells 6 and 7 are lined to a depth of 1 ft only in all areas except the northeast corner where the lining extends to a height of 18 ft.

Each entrance into the south side of each cell will be equipped with two bulkhead or marine type doors, one at each end of each entranceway, the interior door of stainless steel construction and the exterior door of painted steel. Both doors will be of the multiple dog-down type and capable of withstanding an explosive shock pressure in excess of 900 psf. The exterior door will be locked normally to prevent inadvertent or accidental entrance.

The glove box in the east dock area will be used for loading Pu^{239}, U^{233}, and U^{235} products into shipping bottles and for charging returned U^{233} product to the cell 3 processing facility. This glove box will be designed to permit all filling and charging operations to be performed remotely from within an all-stainless steel box. The box will be equipped with airlocks to permit introduction or removal of product bottles without disrupting the primary containment for the filling equipment.

3.1.5 Secondary Containment Areas

Structural construction of the secondary containment areas is a combination of poured concrete, mortared concrete block, steel and aluminum metal siding, and metal deck Class II roofing. All windows now existing in the exterior walls of any of these areas will be either replaced or backed up with metal siding or mortared concrete blocks. All personnel, forklift, and crane bay entrances into these areas are equipped

with double door airlock or vestibule entrances. The crane bay and forklift entrances (Figs. I-2 and I-4) will be equipped with electrical interlocks to prevent opening of either door until the other is closed. All doors on personnel entrance airlocks are spring-actuated for automatic closure after use. Vestibule entrances are considered mandatory (a) to ensure proper flow of ventilation air through these areas at all times and (b) to permit rapid attainment of a 0.3-in. (water) negative pressure within these areas during an emergency, a problem that would be considerably aggravated by the simultaneous exit of personnel from these same areas.

The basement and the west end of the pipe tunnel (Fig. I-3) are treated as a common area. This area is considered the most hazardous of the secondary containment areas, since in it is located all potentially vulnerable radiochemical process equipment such as metering pumps, transfer pumps, and column pulsers. In addition, a storage tank (T-5-M) for recycle process solvent is located in a small room in the northeast corner of the basement. As mentioned previously, the radioactive end of each such item of vulnerable mechanical equipment is shielded within an individual lead blister. Since a high potential for contamination exists within this area, all floors are lined with stainless steel.

The penthouse (Figs. I-4 and I-5) is considered the second most hazardous secondary containment area. The cell roof plugs and numerous pipe penetrations enter the cells from this area, and fuel element charging operations are conducted here. Numerous small-diameter gravity-flow head pots and several process condensers are "unit shielded," and steam control valving for all remotely operated steam transfer jets and all transmitters for process instrumentation are located here. Equipment and piping for the makeup and introduction of decontamination reagents to the process equipment are likewise located here. In addition, there is a possibility that the 4 ft of concrete now existing across the ceiling of the cells may not be an adequate radiation shield for this entire area during some of the Power Reactor Fuel Processing operations. This problem is not considered to be serious, however, since it would be confined to the limited areas over cells 4 and 5 and since supplementary shielding, either in the form of lead sheet or as a concrete pour, could be readily applied if required. The interior surfaces of all exterior siding and roofing in the penthouse area will be painted with Amercoat-86, followed by two coats of Amercoat-33 and topped with a Monsanto D-1000 strip coat. The Amercoat treatment provides chemical protection, while the Monsanto strip coat should greatly expedite any future decontamination effort required.

The solvent extraction or Power Reactor Fuel Processing section of the operating gallery (Figs. I-2 and I-5) is considered the third most hazardous secondary containment area. Numerous pipe penetrations communicate between this area and the process cells. All nonradioactive reagent makeup and metering equipment and all process air, steam, and water headers are located here. The floor is lined with stainless steel, more for chemical protection from the corrosive reagents used than for the containment and decontamination of any radioactivity released in the area.

The east dock (Fig. I-2) is hazardous only in terms of the quantities of fissionable materials to be handled. Since this is to be a reasonably simple and single-function facility, little difficulty should be encountered in designing

a system that will be free of criticality and contamination problems. The entire floor will be lined with stainless steel and the inner surfaces of all exterior siding and roofing will be painted with an Amercoat-33 chemical-protective base coat system topped with a Monsanto D-1000 strip coat.

The south side of the attic space (Figs. I-4 and I-5) is not considered a particularly hazardous area since it does not face directly off the cells. A rather complex system of building-supply mains (process water, potable water, instrument air, steam, etc.) and associated pressure reducing stations are located in this area. Personnel access is seldom required except for construction or maintenance. Any contamination hazard developing would undoubtedly be the result of airborne activity entering the area in ventilation air coming from the operating gallery below.

The sampling gallery is considered the least hazardous of all the building secondary containment areas. All sampling and sample bottle handling operations are performed remotely in a shielded sampling facility, which consists of a number of individual cell sampling blisters connected by a common conveyor system. This facility presently services cells 5, 6, and 7 but will be extended to service cells 3 and 4 also under the present containment modification program. The facility conveyor extends across the roof of the analytical end of Bldg. 3019 and terminates in the central or unloading analytical cell at the west end of the main floor (Fig. I-7). This completely eliminates all hazardous handling operations normally involved in transporting large numbers of radioactive sample bottles via portable shielded carriers. The fact that the shielding on the south side of the cell block is only 4 ft thick may create a minor radiation hazard in the sampling gallery under some of the proposed Power Reactor Fuel Processing programs. This is not considered a serious problem, however, since the relative position of the sampling gallery virtually requires that all radiation take a diagonal route through the 4-ft shield wall in order to enter the area (Fig. I-5) and since it would not be difficult to provide supplementary lead shielding along the gallery side face of cells 4 and 5 if it should become necessary.

3.1.6 Unrestricted Areas

The structural construction in the unrestricted areas of the building (Figs. I-2 and I-5) conforms with that described for the secondary containment areas. The existing windows in the exterior sides of these areas will be retained. Conventional or standard office painting and floor finishing procedures are used throughout. The advantages of establishing such an unrestricted access area outside the limits of the secondary containment areas of the building are numerous: (a) the extent of building contamination will be confined to a smaller area in the event of an emergency; (b) administrative and operating personnel will not have to move out of the building for an extended period of time in the event of an emergency; (c) the emergency control panel for the building containment instrumentation can be located in this area rather than in a new building adjacent to Bldg. 3019; (d) all process control panels are available in this area and would be readily accessible for orderly process shutdown during an emergency (see Fig. I-2 for panelboard locations).

The new containment barrier installed in the attic space (Fig. I-5) would have been located over the partition wall that separates the operating gallery and the control room and office area if it had not been for the congestion of piping (service headers, subheaders, and reducing stations) in this general region. The offset between these two secondary containment barriers requires that the intervening control room ceiling space be sealed as part of the north side secondary containment barrier. The attic space on the north side of the new containment barrier is occupied by existing air conditioning equipment and ducting which supplies ventilation air to the control room and office areas.

3.2 Building Ventilation Description

3.2.1 Cell Ventilation

The ventilation system for the radiochemical processing end of the building is best explained by referring to the transverse section through the building (Fig. I-5). The system described is that which will exist after completion of the building containment modification program.

The sink for all building air ventilation flow is the cell off-gas duct (abbreviated COG; see Figs. I-4 and I-5). This duct is routed to the 3020 stack area where all effluent exhaust air is filtered before being discharged to the 3020 stack. Continuity of service is ensured by having two exhaust fans connected in parallel, one electrically driven and the other a standby steam-turbine-driven unit. This 3020 stack area equipment is described in considerably greater detail in a separate report. Automatic controls on the suction side of each fan maintain a constant vacuum in the concrete portion of the duct, which is located in Bldg. 3019. A control vacuum of 1.5 to 2 in. H_2O is planned. There are two offset cell ventilation exhaust ports communicating between the building COG duct and each processing cell (Fig. I-5). Both ports are located near the ceiling, one on the west wall and one on the east wall of each cell. The flow cross section of all 12 ports is the same, 6 x 48 in.

The negative pressure maintained in each cell will vary with the air flow into the cell. When all ventilation modifications have been completed, only two points of entry for cell ventilation air will be available at each cell (all pipe and drain header penetrations through the shield walls of each cell are to be sealed against air inleakage and a double door airlock system will be installed on the south entrance to each cell). One point of entry will be via a special cell ventilation intake duct, which is to be used during process operation when the cell roof plugs are sealed in place (see Fig. I-5 for typical routing of this duct around the south side of the sampling gallery). The second point of entry will be via the cell roof plug when the cells are open for maintenance and construction purposes. A closure valve in the cell intake duct (not shown) will be instrumented to close automatically when the negative pressure in the cell drops below 0.5 in. H_2O or when a "rate-of-temperature device" in the cell indicates the possibility of a fire in the cell. This instrumentation ensures that all cell intake air is introduced into each cell via the special intake duct during process operation and via the roof plug opening during maintenance and construction.

The intake ducts are sized to introduce a maximum purge flow of 1000 cfm into each cell during operation, which is equivalent to an air turnover of 6 changes per hour.

The exhaust port mechanisms to be installed in the cell ventilation exhaust ports (described in detail later) will be sized to handle a peak flow of 2000-2500 cfm when the cell roof plugs are removed, equivalent to a total cell exhaust flow or roof opening flow of 4000-5000 cfm per cell. This is sufficient flow to permit opening half of an existing cell roof plug, since a superficial velocity in excess of 100 fpm would be attained under this condition.

All cell ventilation air is drawn from the building penthouse area regardless of the type of activity being performed in the cell. Since the purge flow through the cell during operation is only 20 to 25% of the maximum attainable through the exhaust port mechanism when the roof plugs are removed, the pressure differential between the COG duct and the cells during operation will be only 4 to 7% of the control vacuum available in the duct (1.5-2 in. H_2O).

3.2.2 East Dock and Basement Pipe Tunnel

Ventilation for the basement and west end of the pipe tunnel (Fig. I-3) and for the east dock area (Fig. I-2) will be similar to that just described for the cells in that it will all exhaust directly to the building COG duct (see Fig. I-4 for special duct tie-ins for these areas, which are located immediately outside the east end of the building). Minor variations between these systems and the cell system are: (a) the negative pressure to be maintained in both areas is to be of the order of 0.3 in. H_2O; (b) no provisions for opening and closing roof plugs are required, since access requirements for operation and maintenance functions will be the same; (c) while the intake air for the basement and west end of the pipe tunnel will be drawn from the penthouse, it is more convenient to draw intake air for the east dock area from the east end of the sampling gallery; and (d) all intake air to the secondary containment portions of the east dock area is to be exhausted via the product loading glove box and thence into the COG duct overhead. The product-loading glove box is to be a primary containment area, and a negative pressure of the order of 1 in. H_2O is to be maintained there at all times.

3.2.3 Penthouse Ventilation

All exterior siding and all existing roof vents for the building penthouse area are to be permanently sealed to minimize air-inleakage into this secondary containment area. Ventilation will vary, depending on the combined cell and basement air intake requirements. The exhaust rate will be a minimum when all the cells are sealed for process operation and would be of the order of 9000 cfm (1000 cfm to each of seven cells plus 2000 cfm for the basement intake). The exhaust rate will be a maximum when a sufficient number of cell roof openings are open to load the COG exhaust system to the limit of its capacity, of the order of 20,000 cfm. With this much capacity differential available, it will be possible to have as many as three cell roof plugs open for maintenance or construction activities at any one time. The ventilation in the penthouse will

thus vary from a low of 4.5 to a high of 10 air changes per hour. Intake air for the penthouse will be drawn in part from the sampling gallery on the south side and in part from the operating gallery and attic space on the north side.

3.2.4 Sampling Gallery Ventilation

The exterior siding and floor of the sampling gallery will be sealed to minimize air inleakage. The existing air intake on the roof of this area will be modified to provide for the forced introduction of approximately 5000 cfm of ventilation air. This air will be filtered through a 30% NBS rating absolute filter and will be heated, as required, with the existing steam heater. This intake system will be equipped with a closure device and will be instrumented for automatic closure during an emergency; the fan motor would, of course, be shut down simultaneously. Of the total ventilation air introduced to this area, 1000 cfm will be drawn into the secondary containment space of the east dock area via a duct system at the east end of the gallery and the remaining 4000 cfm will be drawn into the penthouse area via open ducts or ventilation slots connecting the two areas.

3.2.5 Ventilation for North Areas

The remainder of the ventilation air required from the penthouse area (5000 to 16,000 cfm) will be drawn from the operating gallery and attic space. Open ventilation ports will exist between the operating gallery and the penthouse, the operating gallery and the attic space, and the attic space and the penthouse. The exteriors of the operating gallery, the south half of the attic space, and the section of the control room ceiling that spans these two barriers will be sealed to minimize air inleakage. Ventilation air introduced into the control room and office area via existing intakes and equipment located on the north side of the attic partition will be used to ventilate the operating gallery and attic space. This equipment delivers 4600 cfm to the office spaces and 14,000 cfm to the control room spaces of this area. The office air is filtered and either heated or cooled as required, while the control room air is filtered and heated when required. Existing ventilation louvers permit all office air to discharge into the control room area and all or part of the control room air to discharge into the north side of the attic space via the space above the false ceiling in the office areas.

By distributing several "normally open" closures along the length of the new attic partition and several more near the floor along the length of the operating gallery-to-control room partition wall, the 18,600 cfm of ventilation air entering the control room area can be forced to leave via the operating gallery and the attic space. By proper adjustment of the closures, a desired flow of 8000 cfm can be introduced into the operating gallery. The "normally open" closures in these two partition walls would be instrumented for automatic closure during an emergency. "Normally shut" closures will be installed in some existing roof vents leaving the south side of the control room ceiling. These devices would be instrumented to open automatically during an emergency and thus provide an exhaust route for the control room and office area ventilation air during an emergency. This ventilation system would thus continue to operate during an emergency. Exhaust ports for either condition of operation would be sized to maintain a slightly positive pressure (0.05-0.10 in. H_2O) in the area at all times.

During normal operation, the ventilation air supplied to the south side of the attic space (18,600 cfm) will normally exceed the intake requirement for the penthouse area (5000 to 16,000 cfm). An escape route for this excess air will be provided by equipping some existing roof vents in this area with "normally open" closure devices. These devices will be instrumented to close automatically during an emergency.

3.2.6 Emergency Operation of Building Ventilation

At the time of an emergency the following events will occur automatically and simultaneously:

(a) All air intakes to the cells, the basement, the east dock area, and the sampling gallery will close.

(b) All "normally open" closure devices in the secondary containment barriers on the north side of the building will close and all "normally shut" closures in the control room roof vents will open.

(c) Several special throttling ports on the south side of the COG duct in the penthouse will open and commence to reduce the pressure in the penthouse and all other secondary containment areas to a negative value in excess of 0.3 in. H_2O. These throttling ports will be instrumented to obtain automatic control of the penthouse or secondary containment area static pressures. They will also be instrumented in such a way as to prevent their opening until the negative pressure in the COG duct exceeds 0.5 in. H_2O.

3.2.7 Cell Intake and Exhaust Port Mechanisms

The cell ventilation intake systems and exhaust port mechanisms must be designed to maintain the integrity of cell containment in the event of an explosion. The cells of Bldg. 3019 are considered to have sufficient structural strength to withstand the shock wave resulting from an explosion of magnitude equivalent to that from 3 lb of TNT. An explosion of this magnitude occurring at the center of a 19 x 20 x 27-ft-high cell will develop a shock pressure of 900 psf at the cell walls and will contribute an instantaneous volume increase in the cell of 100 cu ft (1% of the cell volume). This volume increase would increase the pressure in the cell by 4 in. H_2O, i.e., it would increase the static pressure from a negative value of 1.5-2 in. H_2O to a positive value of 2-2.5 in. H_2O. Since the two exhaust port mechanisms in each cell are to have a combined capacity of 4000-5000 cfm when the pressure in the cell is atmospheric, it follows that these mechanisms have sufficient capacity to eliminate the positive pressure resulting from such an incident by the end of the first second following the explosion.

The following components are to be included in each cell ventilation intake duct (see Fig. I-5 for typical routing):

(a) A remotely operated closure device for use in adjusting and shutting off the purge flow into the cell (this device would fail closed).

(b) A backflow preventer, required to prevent excessive backflow through the intake duct in the event of a cell explosion.

(c) An 80% NBS rating roughing filter, to be located upstream of the backflow preventer can protect the filter from the shock wave of a cell explosion.

The full length of the duct and all joints required for the insertion of the above components will be of leaktight construction. The length of duct between the backflow preventer and the cell and the preventer itself will be designed to safely withstand the effects of a 900-psf shock wave. With this system, containment of a cell explosion is ensured by a combination of the length of the intake duct, approximately 60 ft, and the performance of the backflow preventer. If the backflow preventer is only 95% efficient, the positive equilibrium pressure in the cell immediately after an explosion (2-2.5 in. H_2O) would have to persist for 30 sec before airborne activity would be discharged into the penthouse area. The fact that this back-leakage would be filtered through an 80% NBS rating filter ensures even greater safety. It should not be too difficult to develop a backflow preventer with an efficiency considerably better than 95%.

The air intake systems for the basement and east dock areas will include all the components described for the cell intake systems except that the 80% NBS rating roughing filter will not be included.

The following components are to be included in the cell exhaust port mechanisms:

(a) A remotely operated closure device for use in adjusting the ventilation flow through the cell when the cell roof plugs are removed (this device would fail open).

(b) A remote-indicating flow indicator for use in making valve adjustments on either the intake system or the exhaust port mechanism.

(c) A backflow preventer, similar to that described for the intake system, to prevent the effects of an explosion in a closed cell from being transmitted to an open cell.

(d) A flame arrestor of 40-mesh screen to prevent a fire within a cell from propagating into the COG duct.

3.2.8 Leak-tightness and Air-change Data

Tentative leak-tightness specifications for the sealing operations to be performed on all primary and secondary containment areas are presented in Table I-2. The leak rates specified for the primary containment areas are to apply for a pressure differential of 1.5 in. H_2O, and those for all secondary containment areas are to apply for a pressure differential of 0.3 in. H_2O. Also included in the table are the approximate space volumes and the number of air changes in all areas during normal operation with the ventilation system described here.

Table I-2. Leaktightness, Space Volume, and Air-change Data

Area	Max. Inleakage During Emergency, cfm	Space Volume, ft^3	Air Changes per Hour (Normal Operation)
Primary containment areas			
Cell 1	100	5,600	11
Cells 2 through 5	150	10,000	6
Cells 6 and 7	300	20,000	6
Product loading glove box	5	300	200
Secondary containment areas			
Basement pipe tunnel	300	18,000	7
Penthouse	3,000	120,000	4.5 to 10
Operating gallery	1,300	35,000	14
East dock	150	4,000	15
Attic space	1,200	50,000	15
Sampling gallery	500	25,000	12

3.3 Gaseous Waste Systems

3.3.1 General Descriptions

Figure I-4 outlines other gaseous waste systems, in addition to the COG system, which service the solvent extraction processing cells of Bldg. 3019. These include (1) a vessel off-gas system (VOG), (2) a dissolver off-gas system (DOG), and (3) an analytical laboratory off-gas header (LOG).

The COG system services all process cells and, as described previously, will be maintained at a negative pressure of 1.5-2 in. H_2O. The VOG system is a vent for all radiochemical process vessels, pots, and equipment (except the dissolver) and will be maintained at a negative pressure of the order of 3 in. H_2O via the pressure control system indicated. The DOG system services the process dissolver in cell 5 only and will be maintained at a negative pressure of the order of 6 in. H_2O with the control instrumentation indicated. This header will also be equipped with a "hot wire" hydrogen detection instrument, which will sound an alarm at the Power Reactor Fuel Processing control panelboard when the hydrogen concentration in the effluent off-gas exceeds 2 volume %. The analytical laboratory off-gas header services the analytical hoods in the analytical section.

All three header systems are fabricated of stainless steel. Line sizes are given in Fig. I-4. All vessel off-gas passes through a condenser, located in each cell, before leaving the cell and entering the header system shown. The dissolver off-gas also passes through a condenser before entering the header system; however, this condenser is located in a shielded blister in the penthouse areas. The off-gas condensers are required to decrease the vapor content, primarily steam, in the effluent gases.

The three individual headers are observed to manifold into a single 10-in.-dia header immediately outside the east end of the building. The gases entering this header will pass through a caustic scrubber, a preheater, and a filter before being routed to the 3039 stack area for further treatment prior to release. A vacuum of some 60 in. H_2O is available in this connecting header. Details of the additional treatment which these gases will receive in the 3039 stack area are given elsewhere.

The Operations Division plans to install activity monitors in (1) the 10-in.-dia process off-gas duct which connects the Bldg. 3019 filter pit to the 3039 stack area and (2) the discharge stack for the Bldg. 3019 cell off-gas (the 3020 stack). Both monitors will be instrumented to record and to sound an alarm on the Bldg. 3019 emergency control panelboard as well as on an Operations Division panelboard which will be located in Bldg. 3026.

The Chemical Technology Division has a beta-gamma constant air monitoring device in service for monitoring the activity released via the 3020 stack. The recorder for this instrument is located on the Power Reactor Fuel Processing control panelboard. This instrument system will be retained as a backup and cross-check instrument for the Operations Division instrument.

3.3.2 Bldg. 3019 Caustic Scrubber and Filter

A packed caustic scrubbing tower has been designed for the combined vessel and dissolver off-gas systems in Bldg. 3019. The tower (Table I-3) will be 30 in. dia and will contain 14 ft of stainless steel Pall ring packing.

Table I-3. Design Basis for Scrubber and Filter

Combined DOG and VOG flow rate: 600 cfm air
Tower dimensions: 30 in. o.d. x ~25 ft
DOG and VOG contaminants to be removed by scrubber and filter

	Estimated Scrubber Removal Efficiency, %
Oxides of nitrogen	~85
Radioactive iodine	99.9
Radioactive ruthenium (volatile and nonvolatile)	99
Entrained fission products	60

Caustic concentration: 5-10%
Caustic flow rate: 40 gpm
Maximum pressure drop through packing: 1 in. H_2O
Packing: 14 ft of 1.5-in. stainless steel Pall rings
Fiberglas filters: removal efficiency of 99.9% (particle count efficiency) for particles of 0.2 to 1.0 μ size

Auxiliary equipment for the scrubber includes a 700-gal stainless steel caustic hold tank, two parallel caustic pumps, a stainless steel entrainment separator for the tower exit gas stream, two parallel modified deep bed type Fiberglas filters, and a steam jacket for heating the tower exit gas stream to prevent condensation on the filters. Remote instrumentation for panelboard control of the equipment, a caustic sampler, and an air monitor are also included in the design. Shielding will be provided by a 2-ft-thick concrete wall surrounding the caustic hold tank and a 1-ft-thick stacked concrete block wall surrounding the scrubbing tower.

3.4 Liquid Waste Systems

3.4.1 General

Figure I-3 shows the plan location of all the radiochemical process and floor drainage systems that service Bldg. 3019. These drain headers are all buried underground along the south side of the building; their relative elevations are indicated in Fig. I-5. All these drainage systems except the transfer pipeline system discharge to the Operations Division tank farm and waste disposal facilities. The routing and treatment which these systems receive in the tank farm area are covered elsewhere.

3.4.2 Transfer Pipeline System

This drainage system consists of five or six quality fabricated 304L stainless steel pipe lines enclosed in a stainless steel—lined concrete conduit. Installation of this system was completed early in FY 1959. The system was installed to integrate the processing facilities of Bldg. 3019 with those in the Metal Recovery building (Bldg. 3505), the multipurpose fission product plant (Bldg. 3517), the new head-end pilot plant building (Bldg. 2527), the new high-level waste storage facility adjacent to Bldg. 2527, and the new Transuranic Hot Cell Facility. Some of the many transfers that will be performed by this system are:

1. Darex, Sulfex, and Zirflex dissolution products prepared in Bldg. 2527 will be routed to Bldg. 3019 for solvent extraction recovery operations under the Power Reactor Fuel Processing program.

2. The high-level wastes discharged from the first cycle extraction column in cell 5 of Bldg. 3019 will be routed to the Bldg. 2527 waste storage facility or to the F3P (Bldg. 3517).

3. The second cycle natural uranium product that is recovered in the Bldg. 3019 solvent extraction system will be transferred to the Metal Recovery Building (Bldg. 3505) for final processing and recovery operations.

4. The wastes recovered from the first cycle extraction column of Bldg. 3019 during transuranic processing will be concentrated in a new titanium waste evaporator and then transferred to Bldg. 3508 for recovery processing.

As mentioned previously, the piping in this transfer system was installed under very exacting material, fabrication, and inspection procedures. If a leak should develop somewhere in the piping, however, the radioactivity is still contained, since the concrete conduit through which the piping is routed is lined with stainless steel and pitched for gravity drainage to a low point in the conduit located just north of the Metal Recovery Building (Bldg. 3505). A drain from this low point in the conduit communicates with a nearby underground monitoring tank, which is equipped with a level alarm instrument and a transfer jet for diversion into Bldg. 3505.

3.4.3 Hot Chemical Waste Drain (HCWD)

Subheaders branch off the main header (Fig. I-3) and enter each of the six main cell areas of Bldg. 3019. These subheaders enter each cell on the east face of all cells except cell 1, where it enters on the west cell face. All are centered on the cell face and located 2 to 3 ft above the cell floor. This over-all header system was installed when the Bldg. 3019 cell block structure was originally installed, 16 years ago. The system is fabricated from stainless steel, but neither the type of stainless steel nor the quality of the fabrication is known.

In the past, the system has been used for the disposal of all high- and intermediate-level radiochemical processing and decontamination wastes. These wastes are routinely neutralized with caustic either prior to discharge or immediately following or concurrent with the waste discharge. The use of this system for Power Reactor Fuel Processing will continue as in the past except that the wastes leaving the first cycle extraction column will be discharged via the transfer pipeline system to a quality fabricated 304L stainless steel storage system equipped for heat dissipation when the fission product heat generated in the wastes exceeds that which can be handled safely by the HCWD system.

3.4.4 Metal Waste Drain (MWD)

The design and fabrication of this system are the same as just described for the HCWD system except that the drain connections are centered on the west face of each cell and the existing system does not service cell 1. This system has been used in the past principally for discharge of first cycle solvent extraction column raffinate streams which are laden with fertile materials such as U^{238} and Th^{232}. The use of this system in future Power Reactor Fuel Processing operations will probably be limited.

3.4.5 Cell Cold Drain (CCD)

This drainage system is more commonly referred to as the building process waste system. This is the most complex header system in the Bldg. 3019 area. When modified to exclude use by other buildings (Bldgs. 3001, 3002, 3003, 3006, 3013, and 3020), the system will service the following points and areas in Bldg. 3019:

1. The east and west walls of cells 2, 3, 4, and 5; the west walls of cells 1 and 7; and the east wall of cell 6.

2. The floor drains in the sampling gallery, the penthouse, the operating gallery, and the control room area.

3. Laboratory sinks in the control room area.

4. The floor drains and nonradioactive sinks in the laboratory areas in the analytical end of the building.

The effluent condensate and cooling water from all the coils and jackets of all radiochemical processing vessels, heat exchangers, coolers, and condensers in cells 3, 4, 5, 6, and 7 discharge to the cell subheaders listed under item 1 above.

All the building effluents entering this process waste system pass through manhole No. 19, located at the southwest corner of Bldg. 3019 (Fig. I-3) before draining to the Operations Division's disposal facilities. The Chemical Technology Division will install a liquid waste monitor in this manhole and will instrument this monitor to continuously record the activity level and to sound an alarm when excessive levels of radioactivity are released. This recording and alarm instrumentation will be mounted on the building's emergency panelboard (Fig. I-2).

The Operations Division also plans to monitor this stream within their jurisdiction at manhole No. 25. The output of this monitor will be recorded on the Bldg. 3019 panelboard as well as on an Operations Division panelboard in Bldg. 3026. Both recording systems will be equipped to sound an alarm. The Operations Division's plans for diverting this stream in the event of an activity release are covered elsewhere.

Construction of this waste drainage system is of bell-and spigot type vitrified tile throughout. It was undoubtedly installed at the time of the original building construction (1944).

3.4.6 Cell Floor Drain (CFD)

This drainage system is of bell-and-spigot duriron construction and was also installed at the time of the original building construction; it, also, now serves other buildings and areas in addition to Bldg. 3019 (specifically, buildings and areas 3001, 3002, 3003, 3005, 3013, and 3020). As in the case of the process waste system, these external building tie-ins are to be removed from the system before process operations are resumed in Bldg. 3019. When these changes have been made, this system will service all cell floor drains, all pipe tunnel floor drains, all basement area floor drains indirectly via cell 7 floor drain, and all radioactive sinks and hood floor drains in the analytical end in Bldg. 3019.

The floor drainage in each of the Power Reactor Fuel Processing cells (cells 3, 4, 5, 6, and 7) currently drains into a 10-in.-dia floor sump which projects 2 to 3 ft into the floor. The floor drains serve as side overflows for these floor sumps. Each sump is equipped with a liquid level alarm instrument and a transfer jet; the jets discharge to a common process waste collection vessel (N-16) and are used to keep the floor sumps empty at all times. The following modifications will be made to this floor drainage system under the building containment modification program:

1. The size and geometry of the sumps will be reworked for criticality control.

2. The gravity overflow drain, which discharges to the cell floor drain system, will be permanently capped to prevent air inleakage into each cell via this drainage system when the operating cell vacuum of 1.5 in. H_2O is applied and to prevent accidental release of large amounts of fissionable material or radioactivity via this drainage system.

Because of the 0.3-in. negative pressure to be maintained in the west end of the pipe tunnel, it will probably be necessary to seal the existing floor drains in this area to prevent air inleakage via the cell floor drain system. One or two small-diameter floor sumps equipped with jets discharging back to the process waste collection vessel will be installed as a substitute for these floor drains.

The above modifications will decrease the number of areas serviced by the cell floor drain system. All liquid wastes entering this system now enter a monitoring tank (W-1A) in the ORNL tank farm area, which is under the jurisdiction of the Operations Division. The monitoring and diversion procedures at and beyond this point in the system are covered in a separate report.

4.0 PROCESS DESCRIPTION

The Bldg. 3019 solvent extraction facility is located in cells 3, 5, 6, and 7 of Bldg. 3019. The processing equipment will be arranged in such a way that a variety of fuels can be safely and adequately decontaminated: low-enrichment uranium, medium-enrichment uranium containing small amounts of plutonium, full-enrichment uranium, and thorium containing large amounts of U^{235} and U^{233}. In addition, certain special programs such as the separation of americium and curium from plutonium can be accommodated.

The process flowsheet is represented schematically in Fig. I-6. Each fuel type is handled according to the particular requirements for separation of fission products and fissionable and fertile material.

4.1 Fuel Element Dissolution

Aluminum-clad fuel elements and certain zirconium-clad fuel elements may be charged, from the "penthouse" area, into the dissolver in cell 5 by a suitable slug charging machine. The fuel elements are dropped through a chute which extends through the 4-ft-thick shielding roof of the cell. When the batch size must be limited for reasons of criticality control (e.g., plutonium-aluminum alloy elements), it is done by limiting the number of elements that can be charged to the dissolver. The dissolver is 54 in. dia, 550 gal capacity, and is constructed of type 309 SNb stainless steel. Aluminum jackets are removed chemically with a solution containing 26% sodium nitrate and 25% sodium hydroxide. Zirconium jackets may be removed chemically with a solution 6 M in ammonium fluoride and 1 M in ammonium nitrate. The declad fuel is washed with water to remove traces of the decladding solution prior to dissolution of the core material with a concentrated (~10 M) nitric acid. The resulting dissolver solution is jetted to the feed adjustment tank (48 in. dia, 450 gal

capacity, type 309 SNb stainless steel) for sampling and adjustment of acidity. If criticality is a problem, samples of the dissolver product and the adjusted feed solution are analyzed and checked against the reactor calculations to ensure the nuclear safety of succeeding batches.

Stainless steel-clad fuels, such as would be received in the PRFP program, will be dissolved in Bldg. 2527. The adjusted feed solutions will be pumped to Bldg. 3019 via the transfer pipeline and routed to the feed adjustment tank.

4.2 Solvent Extraction: Gross Fission Product Removal (Cell 5)

The feed is pumped from a tank to the first cycle extraction column, a 5-in.-dia pulsed column. The aqueous feed is contacted with a kerosene (Amsco 125-82) solution of tributyl phosphate (TBP), which extracts the fissionable and fertile materials. The bulk of the fission products leave the column with the aqueous waste, which is temporarily held in tanks for sampling. If no fissionable or fertile material is present, the wastes are evaporated prior to storage. If fissionable or fertile material is found in appreciable amount, the raffinate is recycled to the feed adjustment tank.

4.3 Solvent Extraction: Partitioning and Stripping (Cell 6)

The organic phase from the first extraction column will be routed through a gamma monitor to the solvent extraction partitioning columns in cell 6. The gamma monitor is used as a process control instrument to indicate the degree of saturation of the organic phase with the fissionable and fertile material. Two pulsed columns will be used for the partitioning step.

Fertile material (e.g. thorium) leaving the columns in the aqueous phase will be concentrated by evaporation of the solution, which will then be adjusted to feed conditions for the second cycle extraction columns in cell 7. Fissionable material (e.g. plutonium) leaving the columns in the aqueous phase will not be concentrated by evaporation and will be sent to the extraction columns in cell 3. Americium and curium leaving the columns in the aqueous phase (transuranic program) will be routed to the titanium evaporator and then to Bldg. 3508 via the transfer pipeline.

Fissionable or fertile material leaving the partitioning columns in the organic phase will be sent to a stripping column where it will be back-extracted into an aqueous phase. Fertile material (e.g. U^{238}) leaving the stripping column will be concentrated by evaporation and then adjusted to feed conditions for the second cycle extraction column in cell 7. Fissionable material (e.g. U^{233}) leaving the stripping column will not be concentrated by evaporation but will be sent to the extraction column in cell 3.

When no fertile material is present in the fuel (i.e. fully enriched U^{235}), the fissionable material leaving the stripping column will not be concentrated by evaporation but adjusted to feed concentration for the second cycle extraction columns in cell 7. The strip flow rate to the stripping columns will be carefully controlled and instrumented so that all the fissionable material will be stripped from the organic phase at a safe

concentration. A density recorder-alarm on the aqueous outlet stream will give warning in the event of a high density reading which would result from a decrease in the strip flow rate.

The organic phase leaving the stripping column should contain no fissionable or fertile material. It has suffered some chemical and radiation degradation, however, and must be purified before it can be re-used in the process. The organic phase is sent to solvent recovery system No. 1 in cell 7.

4.4 Second Cycle Solvent Extraction (Cell 7)

The second cycle solvent extraction system consists of two pulsed columns for extraction of fissionable or fertile material into the organic phase and one pulsed column for back-extraction (stripping) into the aqueous phase.

The fissionable and fertile material will be further decontaminated in this cycle. The aqueous raffinate, containing fission products, will be held temporarily in tanks for sampling, and if no appreciable losses are detected, will be disposed of by way of the HCW header to tanks W-5 and W-6. If losses to the raffinate are detected, the material will be recycled to the first cycle.

Fertile material from the second cycle stripping column will be concentrated by evaporation. Concentrated thorium solutions will be pumped to thorium storage tanks, and concentrated uranium solutions will be transferred via the transfer pipeline to Bldg. 3505 for further processing.

Fissionable material (i.e. U^{235}) from the second cycle stripping column will not be concentrated by evaporation but will be routed to the cell 3 solvent extraction system for further purification.

The organic phase leaving the stripping column will contain virtually no uranium or thorium and will be routed to solvent recovery system No. 1 prior to re-use in the process.

4.5 Solvent Recovery No. 1 (Cell 7)

The organic raffinate from the two stripping columns will flow by gravity to a collection tank (225 gal, 42 in. dia, 36 in. high). From this tank the used solvent will be pumped to a 6-in.-dia pulsed column, and contacted with 0.2 M sodium carbonate. Any unextracted fissionable or fertile material remaining in the organic phase from previous cycles will be extracted into the aqueous phase in this column. The aqueous raffinate will flow by gravity to a poisoned collection tank (230 gal, 42 in. dia, 46 in. high) for sampling and measurement prior to disposal to the HCW header.

The organic overflow from the pulsed column will flow by gravity to a batch contactor where it will be mixed with 0.1 M sodium hydroxide and recirculated by a centrifugal pump. The organic overflow from the batch contactor will be directed to a turbomixer, where it will be contacted with 0.1 M nitric acid. The aqueous raffinate from the turbomixer will flow to the above-mentioned aqueous raffinate collection tank, and the organic to a recovered solvent collection tank (475 gal, 54 in. dia, 46 in. high) for recycle to the solvent extraction columns.

4.6 Solvent Extraction, Fissionable Material (Cell 3)

All fissionable material (e.g. U^{233}, Pu^{239}, U^{235}, and mixtures of U^{233} and U^{235}) will be processed in critically safe equipment in cell 3. After adjustment to feed conditions, the fissionable material will be extracted into the organic phase in a 3-in.-dia pulsed column. The aqueous raffinate will be collected in a critically safe waste tank for sampling prior to disposal to the HCW header. Losses to the aqueous raffinate may be recycled to the first cycle in cell 5 or to a small feed adjustment tank in cell 3, depending on the material being processed.

The fissionable material will be stripped from the organic phase in a 2-in.-dia pulsed column. Aqueous product streams containing uranium will be concentrated by evaporation in a geometrically safe evaporator. The concentrated product (~200 g of uranium per liter) will be stored in critically safe storage tanks prior to packaging and shipment.

4.7 Plutonium Anion Exchange (Cell 3)

Plutonium solutions from the cell 3 stripping column will be adjusted to the proper feed conditions for anion exchange. Three anion exchange columns will be provided in a parallel arrangement. Each column will be 5 in. dia and have a 76-in.-high bed of Permutit SK resin.

Loading of the resin beds will be controlled by "in-plant" material balance. The beds are large enough to hold twice the normal operating resin loading. An alpha radiation monitor on the discharge of the resin columns, as a secondary control, will alarm in the event of breakthrough of plutonium.

While one column is being loaded, another will be washed, eluted, and reconditioned. The third column is to be used as standby. The plutonium will be eluted from the resin with 0.6 M nitric acid at a concentration of approximately 40 g of plutonium per liter. The plutonium product may be concentrated to approximately 100 g of plutonium per liter in the geometrically safe evaporator and then stored in critically safe storage tanks prior to packaging and shipment.

4.8 Solvent Recovery No. 2 (Cell 3)

The organic raffinate from the cell 3 stripping column will flow by gravity to a pump-mixed contactor where it will be washed with 0.2 M sodium carbonate. The aqueous raffinate from the solvent recovery contactors will be discharged to a poisoned collection tank for sampling prior to disposal to the HCW header.

Organic from the carbonate wash contactor will flow by gravity to a 3-in.-dia packed column where it will be contacted with dilute nitric acid. After the acid wash the organic will be collected for re-use in the cell 3 solvent extraction equipment.

5.0 HAZARD DESCRIPTION

Many potentially explosive and hazardous materials that may react and release large amounts of radioactivity to the environment must be used in the operation of the Bldg. 3019 solvent extraction facility. A survey of these materials and an estimate of the maximum probable accident that they might cause provides the basis for decreasing the probability of occurrence of such an accident or to localize the effects of the accident.

5.1 Radiation

The Bldg. 3019 solvent extraction facility is generally used for the dissolution of high-activity (i.e., >700 curies/ton) reactor fuels and the separation of the major fission product activity from the fissionable and fertile material by solvent extraction. The operations involve more than 1 g of plutonium or 250 curies of beta-gamma emitters, or the radiophysiological equivalent.

5.1.1 Quantity

The maximum activity throughput will range from a low of 60,000 to a high of 800,000 curies per day (Table I-4). The maximum activity holdup in the plant equipment could exceed the throughput values by as much as a factor of 10. The highest inventory of activity in any one vessel is in the batch waste evaporator prior to discharge to the high-level-waste storage tank.

The quantities of activity in waste streams leaving the Bldg. 3019 solvent extraction facility are represented schematically in Fig. I-8. The dissolver off-gas header will collect off-gas from the dissolver, feed adjustment tank, and high-level waste evaporator; therefore it is the highest level gaseous waste stream leaving the facility. When the dissolution is performed in the Bldg. 3019 dissolver, the activity levels are at a maximum. During the dissolving step as much as 167 curies of Kr^{85} could be released as well as smaller amounts of I^{131} (~1 curie) and Xe^{133} (~7×10^{-3} curie). Additional activity in the gaseous wastes is contributed by particulate pickup from sparging. The maximum amount from this source is calculated to be of the order of 35 curies/day using the model proposed by Nichols.* Relatively small amounts of activity will be found in the vessel off-gas, i.e., only entrained activity from sparging of tanks and airlifts and from intercycle and product evaporators. The cell-off gas or ventilation system should contain essentially no activity. Under normal conditions, the concentrated first extraction column raffinate will be the

*Elsewhere in this series of reports.

UNCLASSIFIED
ORNL-LR-DWG 47733 R2

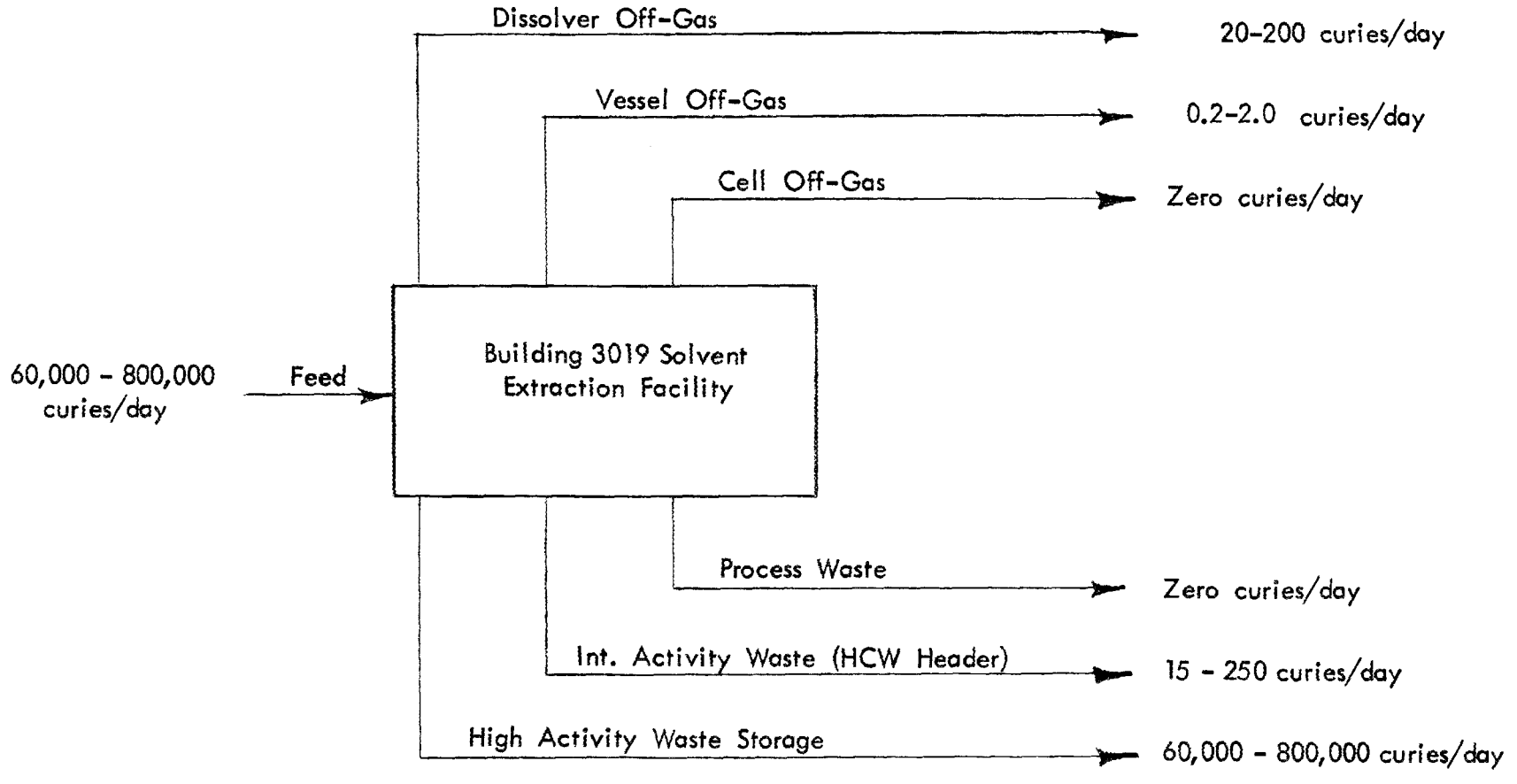

Fig. 1-8. Estimated total activity in waste streams leaving the Building 3019 Solvent Extraction Facility.

highest activity waste stream leaving the system. Aqueous wastes from the other cycles will be disposed of via the HCW header to the intermediate-activity waste storage and will contain mainly ruthenium, zirconium, and niobium. The condensate from heat exchangers and cooling water from condensers and jackets, under normal operating conditions, will contain no activity.

All fissionable materials in the plant are accumulated in the temporary product storage tanks in cell 3. Hold tanks will be provided for 60 kg of plutonium, 60 kg of U^{235}, 60 kg of U^{233}, or 60 kg of U^{233}-U^{235} mixture. The plutonium and U^{235} solutions will be packaged and shipped after appreciable quantities have been accumulated. Solutions containing U^{233} may require reprocessing because of the activity of the U^{232} decay chain if held too long; therefore they will be packaged and shipped as soon as possible after decontamination.

5.1.2 Control

All process equipment containing materials that emit appreciable amounts of penetrating radiation are contained within the massive shielding walls of the concrete cell. Where process lines have had to be brought outside the massive shielding, adequate unit shielding is provided for radiation protection. No access to the cells will be permitted during radiochemical processing. All operations will be remote and not require entry into the cells during routine operations.

The results of a sample calculation show that the radiation dose rate outside the 4-ft-thick normal concrete walls will be of the order of 0.55 mrem/hr from a tank containing 300 kg of uranium from a typical uranium oxide power reactor fuel (Fig. I-9). In the penthouse area and the south wall of the cells the shielding is 4 ft thick. Unit shielding in the cells increases the total shielding of tanks from the south wall in most cases. Unit shielding does not cover the tanks, however, and therefore the penthouse area could have spots where the radiation levels approach 13 mrem/hr. The penthouse and south wall areas are limited-access areas for this and other reasons given in Sect. 5.2.

The waste streams are controlled by either sampling and analysis prior to discharge or by radiation monitors installed in the waste lines (e.g., process waste). Section 3.4 of this report contains a detailed description of the monitoring and diversion equipment.

5.2 Criticality

Several accidents have been caused by the accidental accumulation of water-moderated supercritical masses of fissionable material. A common feature of the accidents was that in each of them the initial and most powerful surge corresponded to the fissioning of approximately 10^{17} neutrons in 0.2 to 0.5 sec, followed by bubble formation and/or thermal expansion sufficient to drive the mixture subcritical. In several of these cases, a mechanical poison was added to the mixture after the initial surge to prevent recurrence of the reaction upon collapse of the bubbles or cooling.

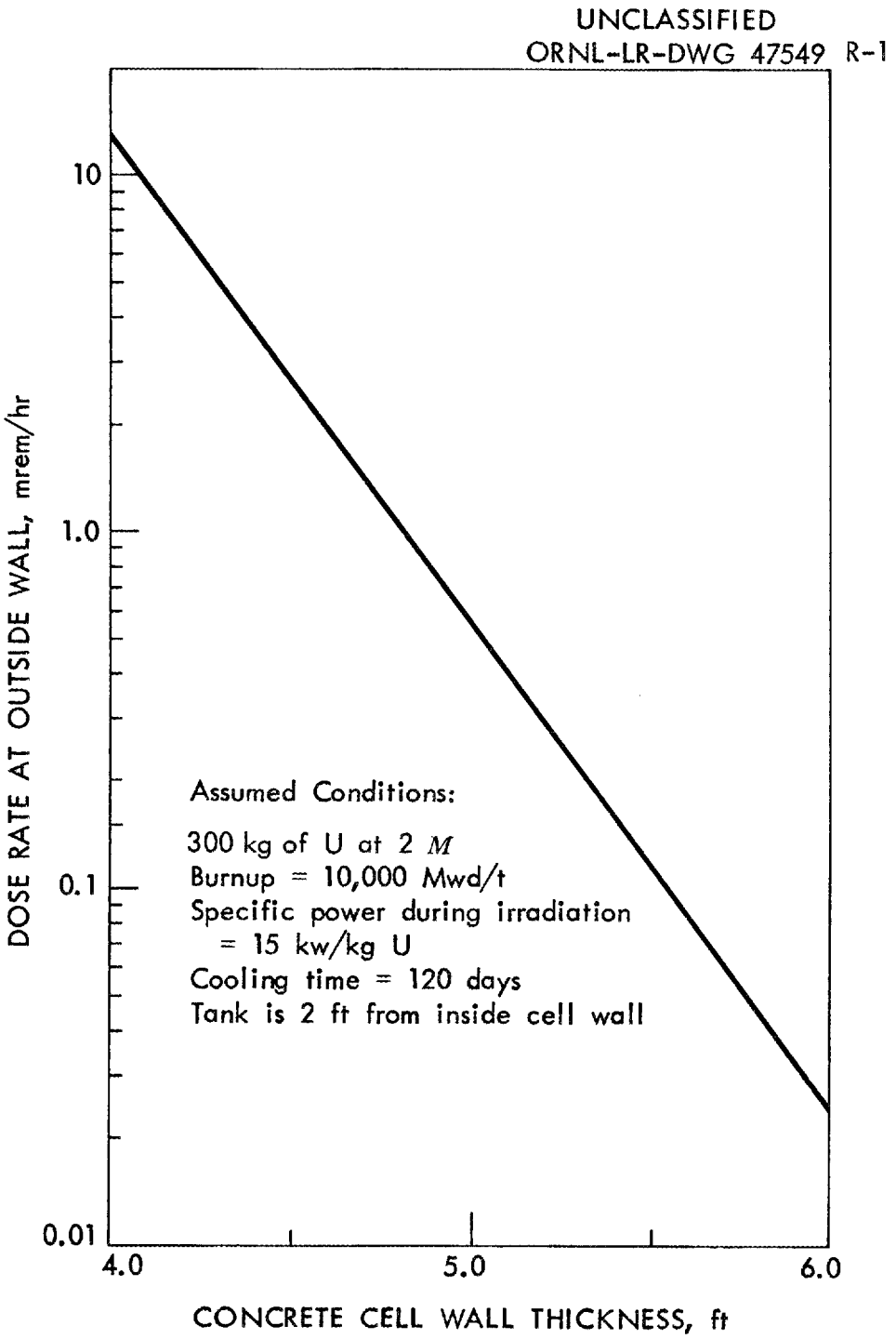

Fig. 1-9. Radiation dose rate at cell face - typical fuel.

In other cases the accumulation was allowed to react until it became permanently subcritical by boiling away moderator or blowing itself apart. It is possible that as many as 10^{19} or 10^{20} or more fissions might be liberated in such a boil-down to a permanently subcritical situation.

If a criticality accident consisting of an initial surge followed by a boil-down to a noncritical situation occurred in a process cell, the effects would be similar to those for an explosion except that prompt gamma rays and neutrons from the reaction would occur. A serious integrated radiation dose could be received through a 4-ft-thick normal concrete wall from a nuclear reaction occurring in a cell (Fig. I-10).

5.2.1 Amount of Fissionable Material

Up to 14 kg of fissionable material per day may be processed (Table I-4), and larger amounts may be stored in the cell 3 storage tanks prior to shipment. As much as 60 kg of plutonium, 60 kg of U^{235}, 60 kg of U^{233} or 60 kg of U^{233}- U^{235} mixture could be in storage, awaiting transfer to shipping containers. It is very unlikely that more than one of these storage tanks would be full at any one time.

5.2.2 Controls

In the past, nuclear safety has been maintained by administrative control of fissile batch sizes with occasional dependence on solution concentration control. Nuclear safety in cell 3 will be maintained by the use of geometrically safe equipment since the high concentrations of fissile material are higher in this cycle. Additional nuclear safety will be provided in areas of the plant that are not geometrically safe by the use of fixed poisons (6% boron, Pyrex glass Raschig rings) in tanks where a criticality situation could exist. Additional controls to preclude a nuclear situation have been or will be provided as follows:

Administrative Control. Strict procedures for batch and concentration control in Bldg. 3019 will include instructions for obviating the relative inaccuracy of reactor calculations and will provide that all essential chemical calculations be checked by more than one individual. Of particular concern is the problem of plutonium precipitation in the dissolver as a result of insoluble polymer formation. Here it will be absolutely necessary to provide reliable administrative methods for adding reagents to the dissolver to ensure that the acid concentration cannot drop below a certain predetermined level, probably 0.6 M, in addition to control of batch size.

Control in the Event of Vessel Rupture. If a tank should rupture as the result of a possible critical reaction or other cause, the solution will drain to the cell sumps, and these solutions must not leave the cell via an uncontrolled route. This will be provided for by making the sumps geometrically safe and ensuring that they can be emptied only by jetting through an intermediate vessel that is critically safe. The intermediate tank will be filled with glass Raschig rings for criticality control.

Stripping Columns and Intercycle Equipment. Stripping columns and intercycle equipment will be critically safe to provide against the buildup of a critical mass of U^{233} in the event of a low stripping solution flow in the Thorex flowsheet.

UNCLASSIFIED
ORNL-LR-DWG 47382 R-1

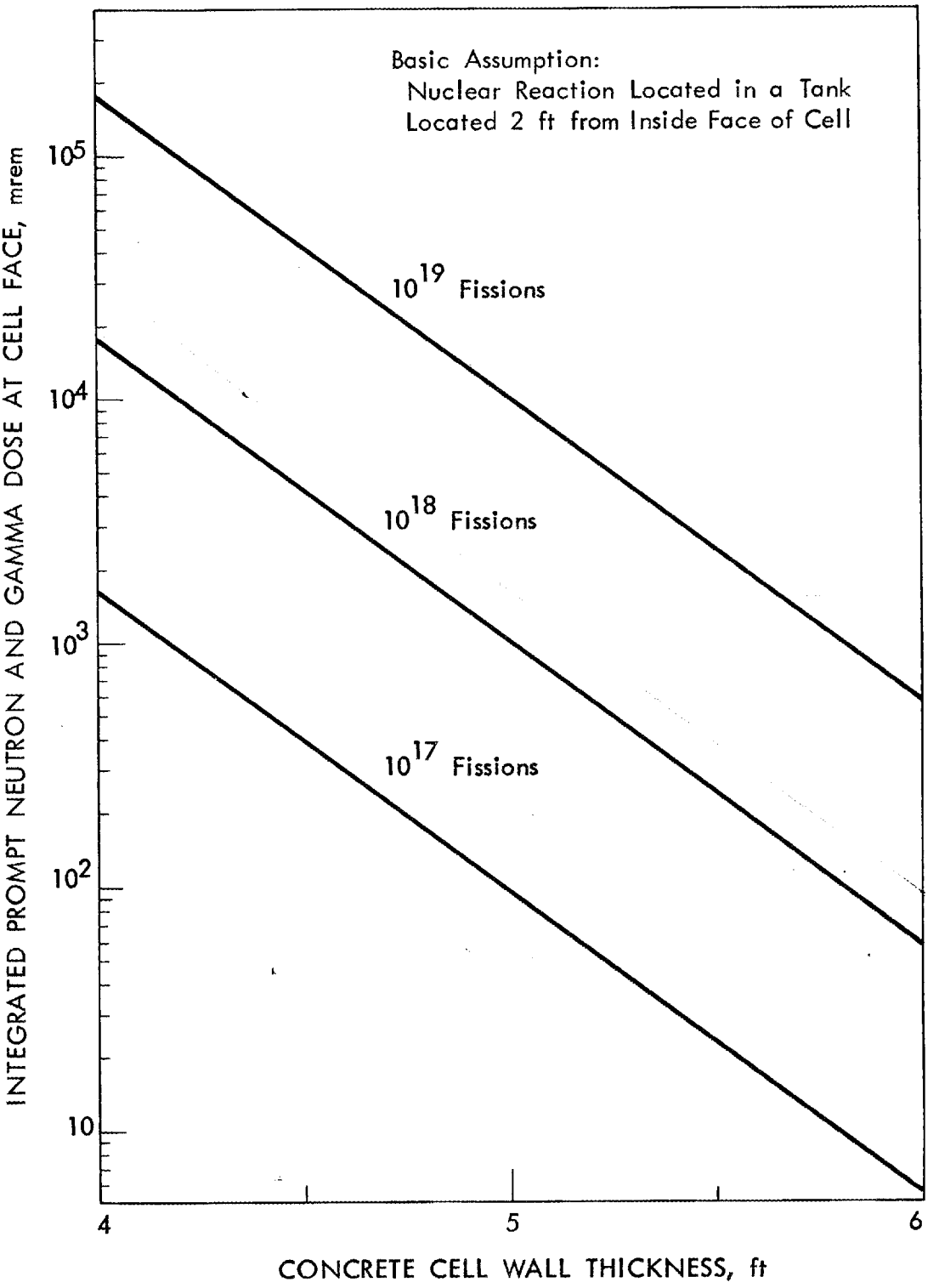

Fig. 1-10. Integrated radiation dose at cell face - nuclear incident.

Table I-4. Amounts of Radioactive and Fissile Material Handled

Fuel	Solvent Extraction Process	Maximum Irradiation	Daily Plant Capacity	Max. Throughput: Fissile Material, kg/day	Max. Throughput: Activity, curies/day	Max. Activity Holdup: In Plant, curies	Max. Activity Holdup: In High-activity Waste Evap., curies
Depleted or normal U slugs	Purex	1000 Mwd/t	300 kg U	0.9 kg Pu	75,000	820,000	560,000
Pu-Al	Purex	90% burnup	0.4 kg Pu	0.4 kg Pu	200,000	450,000	200,000
Th^{233}	Thorex	3000 g U^{233} per ton	120 kg Th	0.36 kg U^{233}	120,000	1,550,000	1,100,000
Nondomestic research reactors	TBP-25	20% burnup	25 kg U	5 kg U^{235}	200,000	240,000	60,000
PRFP:							
CETR	Thorex	20,000 Mwd/t	120 kg Th	10.5 kg U^{235}	800,000	7,970,000	6,000,000
Rural Coop.	Thorex	5,500	120 kg Th	5.0 kg U^{235}	240,000	3,100,000	2,200,000
Borax IV	Thorex	5,000	120 kg Th	1.8 kg U^{235}	360,000	4,640,000	3,300,000
NMSR	Purex	7,400	300 kg U	14.0 kg U^{235}	500,000	5,230,000	3,760,000
FWC-EC	Purex	10,000	200 kg U	3.7 kg U^{235}	600,000	7,770,000	6,000,000
EGCR	Purex	10,000	300 kg U	7.5 kg U^{235}	700,000	7,120,000	5,260,000
CPPD	Purex	3,000	300 kg U	9.0 kg U^{235}	400,000	4,250,000	3,000,000
PRDC	Purex	1,000	300 kg U	0.75 kg Pu	60,000	660,000	450,000

Additional controls on the column will be a low flow alarm on the stripping solution being fed to the column and a density recorder alarm instrument for the aqueous product solution.

Radiation Protection. Certain areas of Bldg. 3019 will be limited access areas in order to decrease the probability of high radiation exposures during a criticality incident as well as routine plant operation. Measures taken to avoid excessive personnel exposure will be: (a) total exclusion from process cells during plant operation and during shutdown until the location, quantity, and concentration of all fissionable material within the cell has been determined; (b) limited access to the Bldg. 3019 south wall area, penthouse, and pipe tunnel; and (c) provision of criticality alarm instrumentation in each cell and procedures for building evacuation.

5.3 Chemicals

Among the chemicals listed that have already been associated with explosions in radiochemical processing operations are tributyl phosphate (TBP) and/or its degradation products and the decontaminating agent Turco 4501. The extent of the hazards involved is discussed in Sect. 5.4.

5.3.1 Quantity

Chemicals in addition to the hazardous fissionable and fertile materials and fission products used in Bldg. 3019 are divided, for convenience, into two groups: (a) those used within the process equipment in the processing of nuclear fuel and (b) those used for decontaminating the process equipment and building floors and walls. The inventories are given in Table I-5.

5.3.2 Control

The control of organic chemicals is covered in Sect. 5.4. Strong acids and alkalis require some degree of control, but they are handled only by trained and experienced personnel and are not considered hazards under these conditions. Analysis and control, with approvals for safety, of all chemicals entering the plant will be exercised.

5.4 Fire and Explosion

Accidents which may scatter the several hundred thousand curies of activity that may routinely be found in the plant, in the probable order of their severity, are: chemical detonations, other chemical explosions, fires, and criticality incidents. For the purpose of this report an explosion will be considered as the production of a large amount of usually hot gases from a smaller volume of liquid, solid, or gas. For explosions other than detonations, the peak pressure created by an explosion in a vessel will be considered the equilibrium pressure that results from a constant-volume adiabatic addition of the heat of the explosion to the gaseous products. A detonation will be considered as an explosion that occurs very rapidly (less than about 1 msec). A detonation is characterized by brisance, or shattering effect, which is caused by a very energetic shock wave that forms and travels very rapidly away from the source of the explosion. The peak pressure in such a shock wave may vary from 10^5 to 1 atmosphere, depending on the type of detonation and the distance from it.

Table I-5. Process and Decontamination Chemicals

Chemical	Approximate Inventory	Use	Potential Hazards
		Solvent Extraction Processing	
TBP	2 drums, 110 gal		Fire, explosion (energy release on explosion of nitration products ~1000 Btu/lb TBP)
Amsco 125-82	10 drums, 550 gal		Fire, explosion
30% TBP-Amsco	4000 liters	In makeup tank and extraction columns	Fire, explosion
60% HNO_3 (13 M)	1000 gal	Fuel dissolution and, after dilution, in scrub and strip streams	Oxidizing and nitrating agent
50% NaOH	800 gal	To neutralize acid wastes; to dissolve Al jackets from fuel elements	H_2 evolution in dissolving Al
$NaNO_3$	6-8 100-lb bags	In removing Al jackets to reduce H_2 formation ($\geq$ 100 g $NaNO_3$/liter decreases evolution rate to minimum of 3 liters/kg Al)	
$Fe(OSO_2NH_2)_2$	one 13-gal carboy, glass	Strip column holding reductant	
$Hg(NO_3)_2$	25 lb	Catalyst for HNO_3 removal of Al jackets from thorium	
DIBAN (3.5 M Al, 5.5 M OH^-)	10 carboys 130 gal	As salting agent and in feed adjustment	
NaF	25-50 lb	Thorium dissolution catalyst	

Table I-5 (continued)

Chemical	Approximate Inventory	Use	Potential Hazards
		Solvent Extraction Processing	
H_3PO_4	12 7-lb bottles	In thorium processing	
$FeSO_4$	25 lb	In thorium processing	
$Al(NO_3)_3$, 2 M	20 13-gal carboys	Salting agent; use is variable	
Na_2CO_3	750 lb, 2 Kraft paper sacks	In solvent repurification	
$KMnO_4$	10 lb	In solvent repurification on test basis	
Ammonium citrate	25 lb	In ion exchange treatment of U^{233}	
Acetic acid	12 5.5-lb bottles	In ion exchange treatment of U^{233}	
Resin	100 lb	Ion exchange	
		Solvent Extraction Equipment and Building Decontamination Chemicals	
Turco-4501A (alkaline amines and organic salts)	4 to 6 drums, 220-330 gal	Decontaminating inside process equipment	Fire, explosion (energy release on explosion of nitration products ~500 Btu/lb Turco 4501A
Turco-4502 (alkaline $KMnO_4$)	1 drum, 55 gal	Used after water wash following Turco-4501A treatment	Strong oxidizing agent
Turco-4512	1 drum, 55 gal	Recommended as flush after 4501	
HF	None	Decontaminating inside process equipment; used in aqueous HNO_3	Personnel burns

Table I-5 (continued)

Chemical	Approximate Inventory	Use	Potential Hazards
Solvent Extraction Equipment and Building Decontamination Chemicals			
Oxalic acid	2 bags, 200 lb	Decontaminating equipment	
Tartaric acid	2 bags, 200 lb	Decontaminating equipment	
Na_3PO_4	25 lb	Decontaminating equipment	
Turco-4324	600-lb drum	Wall and floor decontamination	
Sulfamic acid	4 cartons, 100 lb	Wall and floor decontamination	
Various commercial detergents	200 lb solids	Wall and floor decontamination	

In general, if an explosion, fire, or criticality accident occurs in a process cell, activity may escape through the cell walls, cell ventilation system, or vessel off-gas. If the cell walls are structurally strong and heavily shielded and the cell and vessel off-gas passes through shock-resistant fireproof filters, little activity will escape from the process cell.

Each of the organic chemicals, including TBP, Amsco 125-82, solutions of these, and Turco 4501A, is a potential fire hazard. Potentially explosive compounds can be formed by the nitration of TBP, and 4501A with hot nitric acid. One pound of TBP when completely nitrated could form 1 lb of explosive butyl nitrate having an estimated energy release of 1000 Btu. Turco 4501A contains large amounts of ethanol amines. It is estimated that 1 lb of Turco 4501A, completely nitrated, could form 0.5 lb of ethyl nitrate having a maximum energy release of 500 Btu. Evaporators that receive aqueous streams containing nitric acid from solvent extraction columns are particularly suspect since erratic column operation can result in the carryover of some organic in the aqueous stream.

Explosions can occur in equipment in which hydrogen is liberated, including the dissolver in which aluminum jackets are removed, dissolver off-gas vessels and lines, and storage tanks for radioactive solutions. Mixtures of hydrogen and air below about 10% H_2 will explode with the peak pressure that of the equilibrium pressure, about 150 psi. Above about 10% H_2 in air, the mixture can detonate in large tanks with the peak pressure no greater than about 300 psi and in vessels of very large length-to-diameter ratio, up to about 1000 psi.

Explosions may also occur when certain mixtures of organic liquids and air are ignited. In general, it is suspected that unless the mixture is at a pressure considerably in excess of atmospheric the peak pressure developed is essentially that of a low order explosion and not a detonation.

5.4.1 Control

Measures to prevent explosion from solvents that are held in tanks or that leak out into the cell are:

(a) Only explosion-proof electrical fixtures, wiring, and motors will be approved for installation in the cells and adjacent areas.

(b) Equipment such as MSA infrared detectors will be used to detect explosive concentrations of organic materials. Sampling points will be strategically spaced throughout the cell. The detectors will alarm at a percentage of the lower explosive limit for the detected organic.

(c) A water fog spray system will be installed in the cell for extinguishing fires and/or for explosion control.

Whenever a process stream is concentrated, there is a potential source of explosion because of the possibility of collecting organic phase in the evaporator, followed by evaporation in the presence of nitric acid. The following preventive measures will be used:

(a) Gross amounts of organic phase will be removed from the aqueous streams by a decanter prior to concentration by evaporation.

(b) Dissolved TBP will be removed from product streams by steam stripping prior to evaporation.

(c) Dissolved TBP in recycled streams will be degraded by simmering for several hours at a temperature below 120°C, prior to final feed adjustment and recycle into the process. (Data from SRP* indicate that such a procedure would preclude an exothermic reaction if organic is present.)

(d) Steam pressure on evaporators will be limited to 25 psig, and the solution temperature to 120°C.*

(e) All evaporators will be provided with a means for remote emptying.

(f) Large vents will be provided to prevent pressurization of the evaporator.

(g) When acid must be removed for feed adjustment, it will be done by a steam-stripping technique.

With the controls outlined above, it is felt that the amount of organic solvent entering evaporation equipment can be limited to a maximum of 1 gal. Under the proper conditions, 1 gal of 30% TBP in Amsco could form approximately 3 lb of explosive butyl nitrate having an energy release of about 3000 Btu. The primary containment shell (cells) would contain an explosion of this magnitude.

Hydrogen given off during the jacket-removal step is diluted to below the lower explosive limit with air. As an additional precaution hydrogen detection equipment will be used to detect hydrogen in the dissolver off-gas system.

Vessels used for the storage of thorium, U^{233}, plutonium, or radioactive waste solutions may accumulate dangerous quantities of radiolytic hydrogen. An air sparge sweep (Fig. I-11) will be used on these vessels to prevent accumulation of hydrogen.

Proprietary organic decontaminants are recognized as a serious explosive hazard when heated in contact with concentrated nitric acid. The addition of nitric acid to commercial organic decontaminants with the resulting nitration of their organic constituents could result in the formation of a quantity of explosive material equivalent to about half the weight of reagent present initially (i.e., up to 300 lb of explosive). A detonation involving this amount of explosive would pierce the secondary containment shell of the building; however, since nitric acid is not a reagent in the recommended decontaminating procedure, this hazard is not considered a "credible" accident. The recommended decontaminating procedure is:

---

*G. S. Nichols, SRP, Chem. Tech. Div. Seminar, Nov. 25, 1959.

UNCLASSIFIED
ORNL-LR-DWG 47384 R1

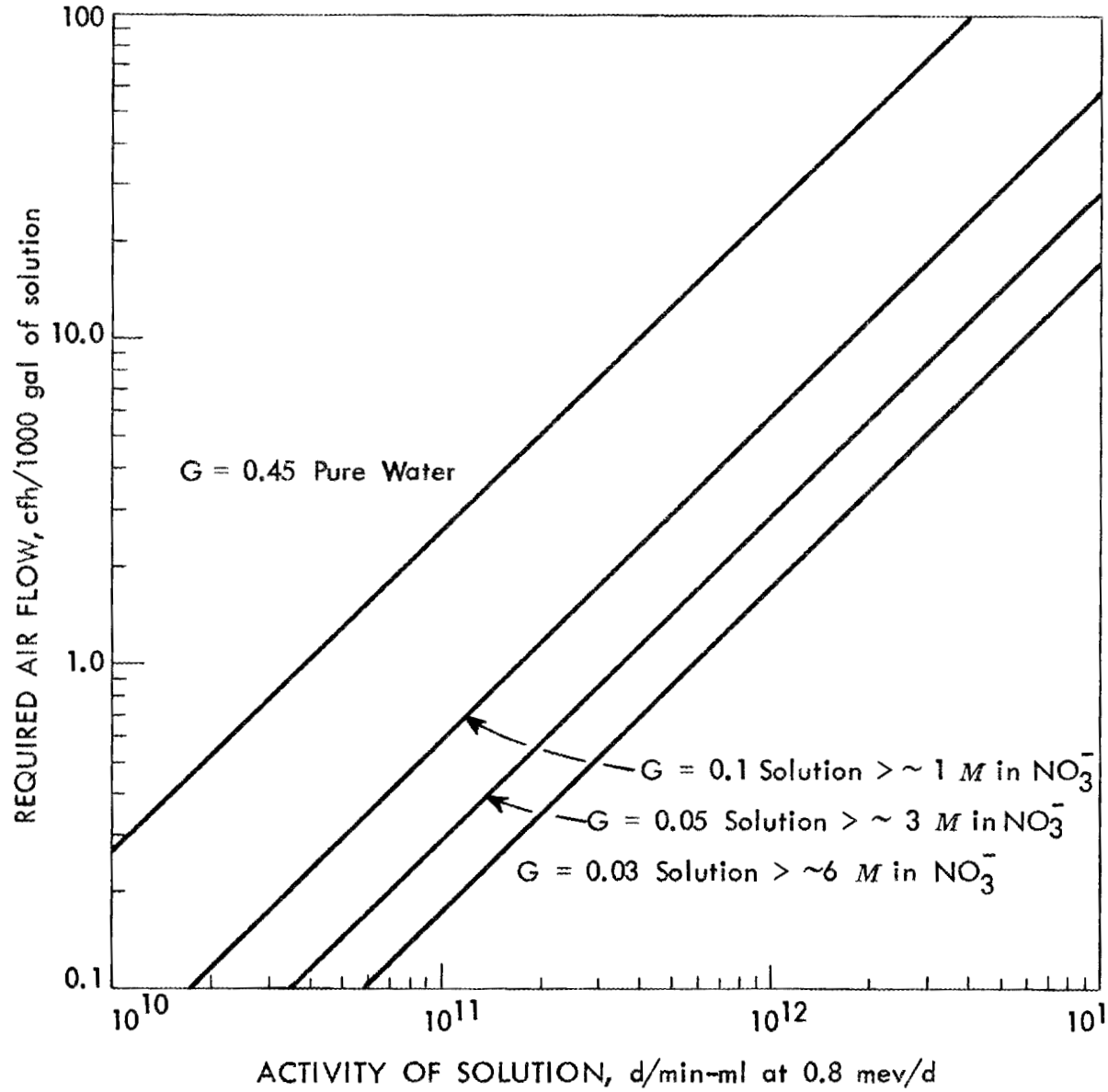

Fig. I-11. The air flow required to dilute radiolytic H_2 below 4 %.

1. Rinse tank three times with water.
2. Add Turco 4501A (full strength).
3. Heat to 240-245°F for 60-90 min.
4. Remove Turco 4501A from tank.
5. Rinse tank twice with water.
6. Add Turco 4502 solution (2-4 lb/gal).
7. Heat to 215-220°F for 60-90 min.
8. Remove Turco 4502 solution from tank.
9. Rinse tank twice with water.
10. Add Turco 4518 solution (5-10% solution).
11. Heat to 75-140°F.
12. Remove Turco 4518 solution from tank.
13. Rinse tank three times with water.

Strict administrative control will be provided in the use of these decontaminants to preclude any possibility of the presence of nitric acid.

6.0 BUILDING SAFEGUARDS DESCRIPTION

6.1 Fire and Explosion Protection

Fire protection equipment in the form of manually operated spray systems, "rate-of-temperature-rise" fire detection instrumentation, and organic vapor explosion detection instrumentation will be installed in all process areas that handle appreciable amounts of process solvent. These are the basement, the west end of the pipe tunnel, and cells 3, 5, 6, and 7.

The spray system will be a manually operated water system and will consist of some 16 nozzles, each having a capacity of 12 gpm, for a cell measuring 19 x 20 x 27 ft high. The nozzles will probably be distributed at two levels and will probably be fed by a 2-in. main entering the cell. All equipment in the cell will be of stainless steel construction. Water for the cell systems will be supplied from the building process water main, and that for the basement and pipe tunnel systems from a potable water main located south of the building. Standard fire protection systems (automatic sprinkler and standpipe system) for all the other areas of the building will be financed from separate fire protection funds.

An average of two "rate-of-temperature-rise" sensing devices will be located in each of the six areas mentioned. These devices will be located near the ceiling of each area and preferably as near as possible to the ventilation exhaust port or ports for each area. The devices will be instrumented to sound an alarm at the emergency panelboard and to automatically shut down the ventilation intake system for the area involved.

Infrared organic vapor analyzers will be used for explosion protection purposes in the areas listed. An average of two points will be sensed in each area. Sensing points will be located near the floor, under equipment ordinarily handling large solvent inventories, and in remote corners where ventilation may be poor. The analyzer and recirculation blower for this instrument will be located in a secondary containment area, probably the

operating gallery. One such unit will be piped to sample or sense a number of different points in the areas involved. The electrical output from the analyzer will be wired to a multipoint alarm-recorder on the emergency panelboard. With this arrangement, two analyzers and two recorders should adequately service the entire building. The instruments would be calibrated to indicate parts of organic vapor per million parts of air rather than percent of LEL (lower explosive limit), and will be set to alarm when the normal or prevailing organic vapor concentration increases suddenly, say, doubles or triples.

6.2 Area Monitoring Instrumentation

Instrumentation for monitoring the airborne activity levels and the radiation levels of the various areas of the building will form an important part of the Bldg. 3019 containment facilities. Such instruments will be required for the detection and control of accidental activity releases to secondary containment areas and for the evaluation of circumstances responsible for such occurrences. Fortunately, most of the instrumentation required (Table I-6) is already available from other programs. Most of the expense associated with this instrumentation under the building containment program will be that required for modifying the instruments so that all receivers and alarms can be located on the building emergency panelboard. It will probably also be necessary to purchase two additional alpha air monitors and two additional beta-gamma constant air monitoring units.

It is noted in Table I-6 that one alpha air monitor and one beta-gamma CAM has been reserved for use in monitoring the atmosphere in any of the PRFP cells (cells 3 through 7) when it is necessary to enter for maintenance purposes. The recording and alarm instrumentation for these two devices will not be mounted on the emergency panelboard. Two permanent sampling lines will be routed out of each of these five cells and terminated where they will be readily available.

6.2.1 Alpha Air Monitors

These devices monitor airborne alpha particulates on a 30-min time cycle and cost about $3000 each. By attaching a plastic hose to the suction side of the filtering system, it is possible to monitor air samples at points some distance from the instrument. It is also possible to monitor two points with the same instrument merely by connecting two suction hoses and instrumenting each with a solenoid system so as to obtain alternate sampling from each connection. With this arrangement, each point is analyzed for a 30-min interval once every hour instead of on a repetitive 30-min cycle. The recording instrument will be removed from the cabinet of each unit and relocated on the emergency panelboard. A duplicate set of alarm instrumentation will also be located on the emergency panelboard. The filtering and monitoring equipment for each device will be located as near the point or points to be sampled as possible and preferably always in a secondary containment area. Sampling points in all areas will vary with circumstances, but in general will be located near ventilation exhaust ports in secondary containment areas and in the vicinity of maintenance operations in primary containment areas.

Table I-6. Airborne Activity and Radiation Detection Instruments

Bldg. 3019 Area	Airborne Activity Monitors		Radiation Monitors	
	α Air Monitors[a]	β-γ CAM[b]	γ Monitrons	γ Ion Chambers
Cell 1				1
Cell 1A	1H			1
Cell 2	1H		1	
Cell 3	1F[c]			1
Cell 4				1
Cell 5		1[c]		1
Cell 6				1
Cell 7				1
Pipe tunnel	2H	1	1	2
Basement		1		1
Operating gallery	2H	2	3	
East dock	1F		1	
Penthouse	1H	2	2	2
Sampling gallery		2	2	
Control room	1H	1	2[d]	
3020 stack		1		
Total instruments required	6	11	12	12
Total instruments on hand	4	9	12	12

[a]"H" indicates half time on a single instrument, while "F" indicates full time. Count rate indicated on a 30-min cycle for "F" and on alternate 30-min cycles for "H".

[b]Constant air monitor.

[c]Assignments are arbitrary. These are standard portable units which are to be available for use when entering cells 3, 4, 5, 6, or 7 for maintenance purposes and are not wired to the emergency panelboard.

[d]These are two new-model constant air monitors; they are not to be wired to the emergency panelboard.

6.2.2 Beta-Gamma Constant Air Monitors

Both the operation and the cost of these devices are quite similar to those of the alpha air monitor just described. The principal difference is that they monitor beta-gamma activity on a continuous basis rather than on an intermittent 30-min time cycle; this, of course, is the result of the fact that it is considerably easier to monitor beta-gamma activity than alpha. Remote sampling, via a suction side extension hose, is also feasible with this instrument. Instrument modifications and installation procedures for these devices will be the same as those described for the alpha air monitors.

6.2.3 Gamma Monitrons

These devices monitor gamma radiation levels, cost about $500 each, and have two scale ranges (0-25 mr/hr and 0-125 mr/hr). The counting and alarm panel associated with each will also be located on the emergency panelboard. In general, the monitor for each will be located at personnel entrances to and passageways through secondary containment areas.

6.2.4 Gamma Ion Chamber Monitors

These devices consist of an ion chamber and an electrometer. An existing 12-point Brown recorder will record the output from all 12 of the installations indicated in Table I-6 and will, of course, be mounted on the emergency panelboard. These devices can accommodate a wide variation in radiation level, each having five scales ranging from 0-0.1 to 0-1000 r/hr, and thus are ideally suited for monitoring the radiation backgrounds in primary containment areas and the radiation levels near lead-shielded process equipment in secondary containment areas (primarily the pipe tunnel, basement, and penthouse areas). These devices are estimated to cost around $1000 per circuit. The electrometer for each circuit must be located as near the ion chamber as possible for fast response, especially when monitoring low radiation levels. Electrometers for cell areas will not be located in the cell without making provisions for the chemical protection of this delicate component.

6.3 Emergency Control Panelboard

The emergency panelboard for Bldg. 3019 will be centrally located in the control room and office area (Fig. I-2). The various types of instruments to be mounted on this panelboard are listed in Table I-7. It should be emphasized, however, that the quantities indicated for each type are only approximate. The vacuum control instrumentation required for the dissolver off-gas and vessel off-gas headers and the indicating and alarm components required for the DOG hydrogen detection instrument (Fig. I-4) are not included in Table I-7, since these items are to be located on the PRFP process control panelboard.

An important feature of the emergency control panel, not listed in Table I-7, will be the emergency scram system for the building ventilation system. This system will consist of two or more independent electrical scram circuits, each of which will be capable of sounding a general building alarm and switching the building ventilation system over to slightly different variations of the basic emergency condition (Sect. 3.2.6). These circuits will be

Table I-7. Emergency Panelboard Instrumentation

No. of Instruments	Instruments
	Building Ventilation Instrumentation
7 ea	Static pressure recorders:* all cells, penthouse, basement-pipe tunnel, product loading glove box, east dock, penthouse COG duct, and outlet duct on both 3020 area filter pits
1 ea	Pressure differential recorders:* across both 3020 filter pits
4 ea	Flow recorders:* total flow and individual flow through each of three parallel banks on the 3020 filter pits
2 ea	Vacuum recorder-controller: (a) to control penthouse COG duct vacuum via throttling valves in 3020 area fan suctions and (b) to control vacuum in penthouse area during emergencies via throttling ports communicating into COG duct in this area
7 ea	Ventilation flow indicators:* for exhaust port mechanisms out of all cells and out of the east dock and pipe tunnel areas
4 ea	Static pressure indicators: east end of pipe tunnel, operating gallery, sampling gallery, and control room and office area
40 ea	Remote actuation systems: (a) closure devices on all ventilation intakes to cells, basement, and east dock; (b) closure device and fan for sampling gallery air intake; (c) closure devices in secondary containment barrier on north side of building; (d) closure devices in control room roof vents; (e) closure devices on ventilation exhaust mechanisms from cells, pipe tunnel, and east dock area; and (f) all fans in the 3020 stack area
	Activity, Radiation, Fire and Explosion Detection Instrumentation
3 ea	Multipoint recorders: (a) one 3020 stack activity monitor, one process off-gas activity monitor, and two process waste activity monitors (manholes 19 and 25); (b) 12 organic vapor detection systems; and (c) 12 gamma ion chamber radiation detection circuits
15 ea	Recorders with alarms: for 5 alpha air monitors and 10 beta-gamma CAM's
10 ea	Indicating and alarm panels: for 10 area gamma monitrons
12 ea	Trip devices with alarms: for 12 "rate-of-temperature-rise" fire detection circuits

*Two-pen receivers are assumed.

electrically operated and will effect switchover by actuating three-way solenoid valves in the pneumatic lines to all closure devices and electrical relays in the starting circuits of all fan motors. Automatic and manual activation of each scram circuit will be possible.

The basic scram circuit for the building will effect the following simultaneous and instantaneous changes in the building ventilation system:

(a) Close the air intakes to all cells, the basement, and the east dock.

(b) Close the intake and shut down the air supply fan to the sampling gallery intake system.

(c) Close all ventilation intakes and attic vents in the secondary containment barrier on the north side of the building and open all control room roof vents.

(d) Open the building evacuation throttling ports which penetrate the side of the COG duct in the penthouse area.

This system will be wired for automatic actuation by a "rate-of-pressure-rise" or "shock sensitive" device located in the penthouse COG duct (a device similar to this is now used to actuate explosion suppression systems). Manual actuation will be controlled administratively and will be used under a variety of circumstances, some of which are:

(a) When the alpha air monitoring or beta-gamma CAM's indicate an excessive concentration of airborne activity in the operating gallery, the penthouse, or the sampling gallery.

(b) When any radiation detection instrument (gamma monitrons or ion chambers) shows an abrupt and unexplained increase in the radiation level in any primary or secondary containment area.

(c) When any organic vapor detection instrument shows an abrupt concentration increase in any cell area.

There will be numerous other circumstances when it will be advisable to actuate the manual system (Sect. 8.0). Since the disadvantages of actuating the system are minor (greater difficulty in opening the personnel doors into and poorer ventilation in secondary containment areas), the rule will be to actuate the basic building scram whenever in doubt.

A second, alternative, scram system will be equipped to close the throttling valves on the suction side and shut down the motive power to all the building ventilation exhaust fans discharging into the 3020 stack in addition to performing all the operations described for the basic scram system. This scram will be wired for automatic actuation when the Operations Division activity monitor in the 3020 stack indicates that excessive activity is passing through the COG filter pit. This system will also be equipped with a manual actuator for use if other factors should indicate excessive release of activity to the surroundings via this stack.

7.0 OPERATING PROCEDURE

7.1 Normal Operating Procedures

Normally, fuel assemblies, consisting of MTR assemblies and aluminum-canned metal slugs, are dissolved in the Bldg. 3019 dissolver. The special case of the dissolution of low-irradiation-level BNL fuel is considered only with regard to receiving dissolver solution, which is prepared in the Bldg. 3505 continuous dissolver. Stainless steel-clad fuels are dissolved in the head-end facility (Bldg. 2527), and the dissolver solution is pumped to Bldg. 3019 for processing. The dissolving operations in each building are considered elsewhere. Operations in Bldg. 3019 are: (a) reagent preparation, (b) fuel element charging, (c) dejacketing, (d) core dissolution, (e) feed adjustment, (f) accountability, (g) solvent extraction, (h) plutonium product handling, (i) U^{233} and highly enriched uranium product handling, (j) solvent recovery, and (k) waste disposal.

7.1.1 Reagent Preparation

Reagents that will be prepared in the makeup area are:

Dissolvent: 6-8 M nitric acid, prepared by diluting 13 M technical grade acid

Scrub streams: 2-3 M nitric acid, prepared by continuously diluting 13 M nitric acid

Partitioning reagent: continuously prepared by pumping stock solutions of nitric acid and ferrous sulfamate into a stream of water; the ferrous sulfamate is prepared in batches from technical grade crystalline ferrous sulfamate

Oxidizing solution: 1.0 M sodium nitrite, prepared in batches from c.p. grade crystalline sodium nitrite

Ion exchange eluant: 0.6 M nitric acid, prepared in batches from 16 M c.p. nitric acid

Dejacketing solution: 25% sodium hydroxide-25% sodium nitrate, prepared in the dissolver from stock technical grade 50% caustic soda and a stock solution of sodium nitrate made from the crystalline technical grade salt.

7.1.2 Fuel Element Charging

Fuel elements will be loaded into chargers in the storage canal and transported to the charging pedestal in the penthouse. Fuel element identity and history records are kept by a data group, who prepare dissolver loading schedules for the operating personnel to follow and to maintain batch control of fissionable material. The dissolver is charged according to a detailed run sheet maintained by the shift supervisor. The run sheet includes general operating instructions, precautions, and emergency procedures pertinent to the fuel elements being handled.

7.1.3 Dejacketing

The aluminum cans are removed from fuel elements requiring this step by dissolution in 25% sodium hydroxide-25% sodium nitrate solution. It is carefully brought to reflux temperature, cooled (diluted if necessary), sampled, and discharged to waste storage. Residual reagent is removed by flushing with hot 50% sodium hydroxide and then rinsing with water. These are sampled and discharged to waste. All operations are conducted according to a detailed run sheet containing general instructions applying to fuel element dejacketing and specific instructions pertaining to the specific fuel in the dissolver.

7.1.4 Core Dissolution

The exposed cores are dissolved in hot (100-110°C) 6-13 M nitric acid (depending on the fuel) to which catalyst (usually fluoride ion) may be added in the case of thoria fuels. Dissolution rates are controlled by limiting the acid addition rate during the early stages of the dissolution, maintaining the off-gas evolution rate within the capacity of the condensing and off-gas systems. Detailed run sheets are followed which provide both general and specific instructions relating to the specific fuel charged to the dissolver as well as the precautions, hazards, and anticipated emergencies. The dissolution may be conducted to a definite undissolved metal heel or to completion, depending on the fuel. Highly enriched uranium-thorium oxide and plutonium-alloy fuels will be dissolved completely, whereas the normal and slightly enriched ($\leq$ 1%) types will be dissolved to a definite metal heel.

The dissolver solution may be further processed by exhaustive distillation to remove chlorides and then clarified by centrifugation. Criticality control is maintained by including soluble poisons in the solution, the geometry of the equipment, and limitation of batch size. Every effort will be exerted to maintain a chemical environment that keeps the fissionable materials in solution and in such a state that representative sampling and accurate analyses may be conducted on the solutions handled during each step in feed preparation.

7.1.5 Feed Adjustment

Adjustment of the raw dissolver solution to the conditions specified in the flowsheet consists in adding nitric acid and/or water. This operation is conducted in batches with sufficient mixing after adjustment to ensure solution homogeneity. Adjustments are made on the basis of chemical analyses of samples withdrawn from the raw dissolver solutions. The feed preparation flowsheet includes detailed steps for conducting feed adjustment along with formulas for making the simple calculations required.

7.1.6 Accountability

Plant inputs of valuable materials are measured on the adjusted feed solution in an accountability measurement tank designed for this purpose. The tank is carefully calibrated for volume measurements with both water and solution approximating the composition of solutions to be measured.

All volume measurements are corrected for temperature. Samples are withdrawn from the thoroughly mixed adjusted solution and submitted for analysis. Sufficient samples are withdrawn from each lot of solution measured to minimize the limit of error associated with the analytical data. Based on the corrected volume and the analytical data, the amount of valuable material is calculated. The material input to the plant is determined as the difference in the total material in the accountability tank before and after a transfer of a given lot of adjusted solution to the feed head tank.

The procedures to be followed by the operating personnel in conducting accountability measurements, i.e., mixing, sampling and sample handling, data logging, and transferring solution to and from the accountability tank are given in detailed run sheets. Raw data are logged in the data log, which is kept up to date by the operating shift supervisor. Daily summaries prepared by the data group bring the cumulative totals of material input forward. Similar data are kept for waste and product streams leaving the plant so that plant holdup can be determined at any time.

7.1.7 Solvent Extraction

The adjusted feed solution is continuously processed by solvent extraction through a partitioning cycle. The separated plutonium is processed through a second solvent extraction cycle and isolated on anion exchange resin. The separated uranium is processed through two more solvent extraction cycles, one of which is located in Bldg. 3505 where the final uranium product is freed of solvent by steam stripping and concentrated by evaporation to about 400 g of uranium per liter.

Plutonium product is stored in tanks containing a fixed poison matrix. All the plutonium processing equipment downstream of the partitioning cycle is of geometrically safe design or is poisoned with fixed poisons.

All procedures conducted in the solvent extraction operation follow detailed run sheets that include check-off items as well as routine data checks for normal operation of the process as well as for maintaining nuclear safety. All operating supervisors are trained and experienced in this type of operation. Procedures for meeting all anticipated emergencies have been prepared and the operating personnel indoctrinated and trained in their application.

7.1.8 Plutonium Product Handling

Plutonium is eluted from the ion exchange resin according to a detailed procedure spelled out in a run sheet. The product solution, containing about 50 g of plutonium per liter, is collected in a geometrically safe tank, mixed thoroughly, and sampled. The solution may, if desired, be concentrated by slow evaporation in the product-collection tank or transferred to a storage tank containing a fixed poison matrix. Condensate from the evaporation step is collected, monitored for plutonium, and discharged to waste.

Plutonium for shipment will be transferred to tared 15-liter plastic bottles in a loading station (glove box equipped with filters, pressure gages, etc.) that meets double containment requirements. The plastic bottles average 5.7 in. o.d. and have been approved by the Criticality Review Committee for plutonium concentrations up to 100 g/liter. Normally, only 10 liters of solution is charged to each bottle. After being filled, the bottles are weighed, the vent inserted, and the assembly bagged and placed in the shipping container, which consists of 6-in. Schedule 5 stainless steel pipe fitted with a gasketed flange cover that is gastight. The entire assembly is enclosed in a 2 x 2 x 5-ft plywood case that ensures safe spacing. The cased assembly has been approved for shipping plutonium in concentrations up to 100 g/liter.

7.1.9 U^{233} and Highly Enriched Uranium Product Handling

Enriched uranium and U^{233} are isolated on the ion exchange resin beds. The same procedures, practices, and precautions mentioned for plutonium apply to U^{233} and highly enriched uranium product handling. The second plutonium solvent extraction cycle is used when U^{233} or highly enriched uranium is processed.

Piping changes necessary to convert the equipment from programs recovering plutonium to those recovering U^{233} and enriched uranium will include severing all lines that lead to possible cross contamination and/or unsafe localities, tanks, etc. Ends of the severed lines will be closed with welded caps.

Following piping changes and prior to resuming processing, the flowsheet and equipment will be reviewed from the standpoint of fire, chemical compatibility, and nuclear safety.

7.1.10 Solvent Recovery

Spent solvent is continuously recovered by contacting the stream with 0.2-0.4 M sodium carbonate in a 6-in.-dia pulsed column. Traces of uranium, plutonium, and/or thorium, as well as residual fission products and solvent degradation products, are removed with the aqueous stream, which is collected in a catch tank, mixed, sampled, and discharged to waste. If the valuable material content is not acceptably low, the spent aqueous waste carbonate solution will be stored for recycle. The washed spent solvent is next contacted with aqueous sodium hydroxide (0.5 M) in a continuous pump mixer-settler and then contacted with 0.1 M nitric acid in the recovered solvent collection tank. The acid scrub solubilizes entrained sodium hydroxide and precipitated solids. The spent sodium hydroxide and nitric acid streams are collected in the same tank with the spent carbonate solution.

7.1.11 Waste Disposal

All plant effluent streams are monitored for valuable material prior to discharge to waste. A cumulative total of material discharged to high-level chemical waste is maintained as well as one for batches of streams that, because of excessive valuable material content, must be stored for recycle. The sampling procedures and detailed instructions on disposal of all aqueous wastes are included in run sheets and the general run condition folder, which are approved and issued before the process is placed in operation.

7.2 Preventive Maintenance

Generally, major maintenance to mechanical items will be conducted during scheduled plant shutdowns. The items will be decontaminated in place before the cubicle shields housing contained items are opened for access to the equipment. Worn and corroded parts will be replaced before resuming operation.

Since all drive units and pumps (except one) are located in the pipe tunnel to which access is limited, routine maintenance of these items on a weekly basis is possible. However, pump heads that handle radioactive solution must be partly decontaminated before the surrounding shield is opened.

7.3 Nonroutine Operations

7.3.1 New Chemical Flowsheets

New flowsheets are tested as a part of the development program. Frequently, one-shot programs are completed to recover small amounts of rare or unusual material in which the Commission has an interest.

Before any operation in the plant is started, new flowsheets are examined for chemical compatibility of all reagents to be used in the program, to recognize and eliminate fire and explosion hazards, and to minimize the radiation and health hazards. Detailed run and check sheets are followed which call attention to all known and recognized hazards and anticipated emergencies that exist or may arise. The operating procedures to be followed are reviewed by the committees concerned with radioactive operations and those concerned with processing of fissionable materials. Only after their approval is given are operations allowed to begin.

A training program in which the operating personnel are familiarized with the program is completed before each new operation. Included will be the procedures to be followed in evaluating conditions that arise with respect to hazardous operation, etc., and the action to be taken. Training will include identification of all items listed in the run sheets and the significance of each.

7.3.2 Direct Maintenance

All mechanical equipment except one submerged pump is located in the pipe tunnel. The pipe tunnel is a contamination, restricted-access, zone. Generally, drive units for the diaphragm pumps and pulsers are accessible at all times under carefully controlled conditions. The remote pump heads and the pump head assemblies, being continuously flooded with process solutions, are heavily shielded. They cannot be maintained directly but require some prior decontamination to lower the radiation level.

Access to the pipe tunnel is controlled by restricting possession of the keys to locked access ways to the operating shift supervisor, who is at all times aware of existing hazards. Personnel entering the area do so strictly according to prescribed procedures. These include a prior Health Physics survey and entry only after compliance with zone regulations applying to clothing, survey equipment, mask, badges, dosimeters, etc. Individuals who enter

the area will be familiar with the equipment in service and the existing conditions that constitute hazards, all of which have been made clear to him. His working time will have previously been determined, and when the end of this interval is approached, the workman will be recalled from the area. The craftsman or operator will be familiar with the operation of dosimeters and survey instruments. In general, craftsmen will work in pairs, one at the job in view of the other who stands clear of the radiation zone until it is his turn, and who during this period is prepared to assist the other out of the area in the event of an emergency.

Maintenance of process equipment inside the cells will be conducted only during shutdown and after decontamination of the equipment in the area. Radiation and health hazards will be evaluated and minimized prior to cell entry, and all Health Physics procedures will be followed. Since decontamination of cell equipment constitutes a major operation, detailed run sheets will be prepared and followed.

8.0 EMERGENCY PROCEDURES

The building emergency procedures presented in this section are of a preliminary nature. They are intended to outline and briefly describe the variety and types of procedures which will be developed as the design and construction of the Bldg. 3019 containment modification program progress. All these procedures will require Laboratory Management approval before normal building operations can be resumed after an incident. This approval is required regardless of whether or not the incident turns out to be a "true" incident. An incident is considered to have occurred any time that it becomes advisable to apply an emergency procedure, even though it may later develop that the incident was created by the faulty operation of a detection instrument.

8.1 3020 Stack Release

The following administrative and operating procedures are to be followed when the Operations Division monitor in the 3020 stack sounds an alarm in Bldg. 3019. (This monitor should trip the alternative emergency scram system described in Sect. 6.3 of this report at the same time that the alarm is sounded.)

1. Check suction pressures and flows of all 3020 area fans to ascertain if the alternative scram system has functioned properly. If not, actuate the manual trip for the alternative scram and perform any other manual operations that may be required to terminate discharge to the stack.

2. Call the Operations Division for emergency assistance. Request that duct valving in the 3020 stack be switched to permit discharge of the Bldg. 3019 COG system via the Pile Filter House System (Bldg. 3002).

3a. Examine the flow pattern through the operating banks of each filter pit (the analytical pit as well as the 3019 pit) and attempt to locate and isolate the bank responsible for the release.

3b. Concurrent with 3a, commence orderly shutdown procedures for all processing operations. First consideration should be given to all factors that will decrease the load on the DOG and VOG systems servicing the process (shut down all spargers, samplers, airlifts, etc.).

3c. Concurrent with 3a, check the 3020 stack activity release as recorded on the CTD CAM device. If this instrument does not confirm the release, request that the instrument circuit for the Operations Division instrument be checked out.

4. Resumption of the Bldg. 3019 COG system via the Pile Filter System should be established as quickly as possible. Resumption of discharge to the 3020 stack, however, should not be undertaken without first obtaining Laboratory Management approval.

The above procedure assumes that the Operations Division monitor will sound the building alarm. If the reverse should occur, with the CTD monitor sounding the alarm, the procedure should be the same except that manual actuation of the alternative scram would be mandatory since this instrument will not be wired for automatic actuation. The likelihood of such an occurrence is remote, however, since the Operations Division instrument will be a considerably more sensitive and reliable instrument. (The Operations Division instrument will be sensitive to alpha-active materials as well as to beta-gamma-active materials.)

8.2 Process Off-gas Release

The following procedure should be followed when the Operations Division activity monitor in the process off-gas header, located downstream of the Bldg. 3019 scrubber-filter facility, sounds an alarm in the building.

1. Call the Operations Division and request additional protection. Since the Operations Division will normally subject this Bldg. 3019 effluent to a second scrubbing and filtering operation in the 3039 stack area (thereby providing secondary containment), the consequences of a Bldg. 3019 release via this system should not be as serious as a release via the 3020 stack.

2a. Commence an orderly process shutdown immediately. Initial consideration should be concentrated on terminating any dissolution, feed adjustment, waste evaporation, sparging, sampling, and airlift operations, i.e., all operations that tend to contribute either radioactivity or volume to the individual DOG and VOG systems.

2b. Concurrent with 2a, have the instrument circuitry for the POG activity monitor checked out in an effort to establish whether or not a real emergency exists. Regardless of the outcome of this instrument check, process operations should not be resumed without first getting Laboratory Management approval.

8.3 Process Waste System Release

The following emergency procedure should be used when the Operations Division activity monitor in manhole 25 sounds a building alarm.

1. Call the Operations Division and request emergency assistance. This assistance will involve either the re-routing or the diversion of the Bldg. 3019 process wastes stream within the tank farm area.

2a. Commence an orderly process shutdown immediately. The holdup in any equipment where steam heating has recently been concluded should be transferred to another vessel promptly. All accessible valves in condensate and cooling water effluent lines from evaporators or vessel coils and jackets should be closed. Where such valve closure on evaporators and heaters is possible, the steam should not be shut down until the equipment holdup has commenced to cool. When closure of the condensate line is not feasible, the contents of the equipment should be drained below the heating surface before the steam is shut off. The steam pressure to all operating equipment that cannot be shut down by either of these approaches should be reduced to as low a value as possible without running the risk of incurring an activity release. Final shutdown should be deferred until later.

Cooling water to off-gas condensers should be shut down promptly in order to reduce the volume discharged to the process waste system. Cooling water to process evaporators should be shut down as heating operations are terminated.

2b. Concurrent with 2a, the recorded activity level on the CTD monitor in manhole 19 should be checked. If this instrument indicates no release, the operability of the Operations Division monitor should be checked to confirm or disprove the existence of a real emergency. With Health Physics assistance, samples of the process waste leaving the building should be drawn from manhole 19 and retained for a thorough radiochemical analysis. Regardless of the conclusions reached, however, process operations should not be resumed without first obtaining Laboratory Management approval.

The above procedure assumes that the Operations Division monitor sounds an alarm in Bldg. 3019. The same procedure would be followed if the CTD monitor in manhole 19 should alarm. Since the output of the CTD monitor will not be wired to the Operations Division panelboard in Bldg. 3026, the importance of calling the Operations Division promptly when this instrument alarms cannot be overemphasized. While the CTD instrument will not have the sensitivity and reliability of the Operations Division instrument, it will be of considerable value in verifying the reliability of the latter and in sounding an advanced alarm in the event of a major release.

8.4 DOG Hydrogen Explosion Hazard

The operability and reliability of hot wire detection instruments should be vertified before each dejacketing operation is commenced. Dejacketing procedures should emphasize the importance of promptly initiating the dejacketing reaction when the addition of the dejacketing reagent is commenced so that

the reagent addition rate will serve to control the reaction rate and thus the hydrogen evolution rate. When excessive hydrogen concentrations are evolved, the corrective steps listed below should be applied in successive order until the situation is brought under control.

1. Introduce additional purge or dilution air into the dissolver, preferably via the vessel sparger system. The rate of such addition should not exceed the capacity of the DOG header.

2. Stop the dejacketing reaction by terminating the addition of reagent and introducing the cooling water to the dissolver jacket.

3. As a last resort, flood the inside of the dissolver with water.

Dejacketing operations should not be resumed until the operating procedures preceding the occurrence have been reviewed at the Division level and additional safeguards have been included in either the design of the equipment or the dejacketing operating procedure.

8.5 Cell Vapor Explosion Hazard

Such an occurrence would be considered to exist when the vapor concentration level in any cell showed an abrupt increase, say, a two- or threefold increase. The following procedures are to be followed in such an emergency.

1. Check the purge flow through the cell involved for assurance that the cell air-intake system is wide open. If not, open to obtain maximum purge or dilution effect.

2. If step 1 does not correct the situation, trip the basic emergency scram system for the building and proceed with steps 3 and 4.

3. Have the instrument circuit for the infrared analyzer checked, and proceed with an orderly shutdown of all process operations in the cell. Shut down promptly all electrically operated equipment, all high-temperature operations, and all solvent transfer pumps.

4. Check the cell floor sump level instrument for evidence of a solvent buildup. If a buildup is noted, try to locate the process leak by inspecting the level instruments for all cell vessels for an abnormal depletion. If a process leak is located, transfer the contents of the vessel to another vessel promptly.

5. If the instrument check proves that a real emergency exists, and if the procedures outlined above do not correct the situation, devote further efforts to removing all solvent from the cell.

In the event of such an occurrence, whether real or not, normal operations should not be resumed without first receiving Laboratory Management approval.

8.6 Cell Fire Hazard

With two or more independent rate-of-temperature-rise instrument circuits for each cell there should be little doubt regarding whether or not a true emergency exists. The following stepwise procedure is recommended for such an occurrence.

1. Actuate the basic emergency scram system for the building. Check the ventilation flow through the cell for assurance that the cell intake flow has been interrupted.

2a. Check temperature and level instrumentation on all process vessels in an attempt to locate the point of process rupture and/or the general location of the fire.

2b. Concurrent with 2a, commence to shut down all process operations in an orderly fashion, the primary objective of such shutdown procedures being to remove all process solvent from the general area of the fire and preferably into another cell.

3. If the above procedures are not effective (evaluated by inspection of process thermocouples in the affected area), turn on the manually operated spray system in the cell.

When the cell spray system is turned on careful consideration must be given to the criticality situation in the cell. The water spray system is designed to introduce water into a standard 19 x 20 x 27-ft-high cell at a rate of 200 gpm, which is equivalent to a floor accumulation rate of 1 in./min. If equipment which is "geometrically safe on an unreflected basis" is located near the floor, then the water must be shut off before the water level contacts such equipment. In general, it is recommended that the spray system not be allowed to run for more than 10 min. Under no circumstance should the spray system be turned on until the cell floor sump has been emptied.

Part II. BUILDING 3019, VOLATILITY SECTION

3.0 PLANT AND PROCESS DESCRIPTION

3.1 Building Description

Building 3019 is constructed of concrete block and steel Q panels on exposed steel framing. The roof is a class 2 built-up tar and gravel composition on a metal deck. The building contains offices, laboratories, solution makeup rooms, operating galleries, and heavily shielded cells. The radiochemical process operations are carried out in these cells, which are constructed of 4- to 5-ft-thick reinforced concrete and are served by a shielded pipe tunnel. A second set of shielded cells in the analytical area is equipped with manipulators and glass viewing windows (see Part I).

3.2 Process Description

The ORNL Fluoride Volatility process separates volatile uranium hexafluoride from other fluoride salts and fission products (Figs. II-5 and II-6). The major steps in the process include:

1. Hydrofluorination to dissolve zirconium-uranium alloy fuels in fused salt.
2. Fluorination to produce UF_6 and remove it from the fused salt, leaving behind the nonvolatile fission products.
3. NaF sorption-desorption to remove volatile fission products.
4. Cold-trapping to condense the UF_6 product and remove it from the process.

The hydrofluorination is carried out in a cylinder constructed of INOR-8. Dissolution starts in about 31 liters of molten $NaF-LiF-ZrF_4$ at temperatures ranging from 650 to 500°C and requires ~20 hr (Fig. II-7).

The salt is then transferred to the fluorinator (Fig. II-8), constructed of L Nickel, where it is sparged with fluorine for ~2 hr at 500°C. Integral with this reactor is a solids separation chamber mounted on top.

The gaseous UF_6, unconsumed fluorine, and volatile fission product fluorides pass to the NaF sorption beds, where the UF_6 is sorbed at 100°C. The fluorine passes through. The sorption beds contain 1/8-in. NaF pellets, in Inconel vessels (Fig. II-9), and have sufficient capacity to sorb 6 kg of UF_6. Approximately 500 g of UF_6 is produced by each fluorination, and therefore the products from a number of fluorinations may be collected before UF_6 is removed from the bed.

UF_6 is desorbed from the first NaF bed and is sent through the second bed, for additional decontamination, with a stream of fluorine as both beds are raised to 400°C. The UF_6 product is then condensed as a solid in two cold traps in series held at ~-40 and -60°C, respectively. One trap is constructed of copper (Fig. II-10); the other is made of Monel with copper internals (Fig. II-11). The cold traps are heated to a temperature of >64°C, and the UF_6 product is drained from the cold traps as a liquid to a product receiver.

UNCLASSIFIED
ORNL-LR-DWG 39253

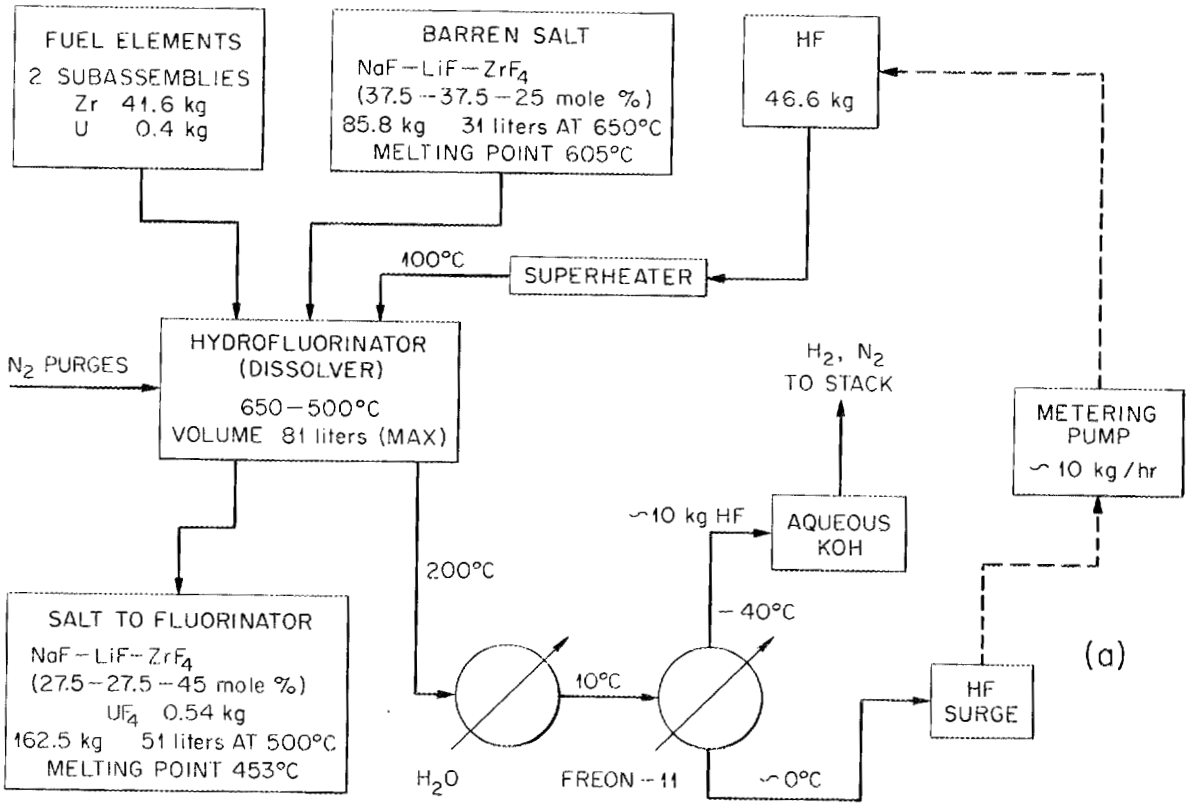

UNCLASSIFIED
ORNL-LR-DWG 39252

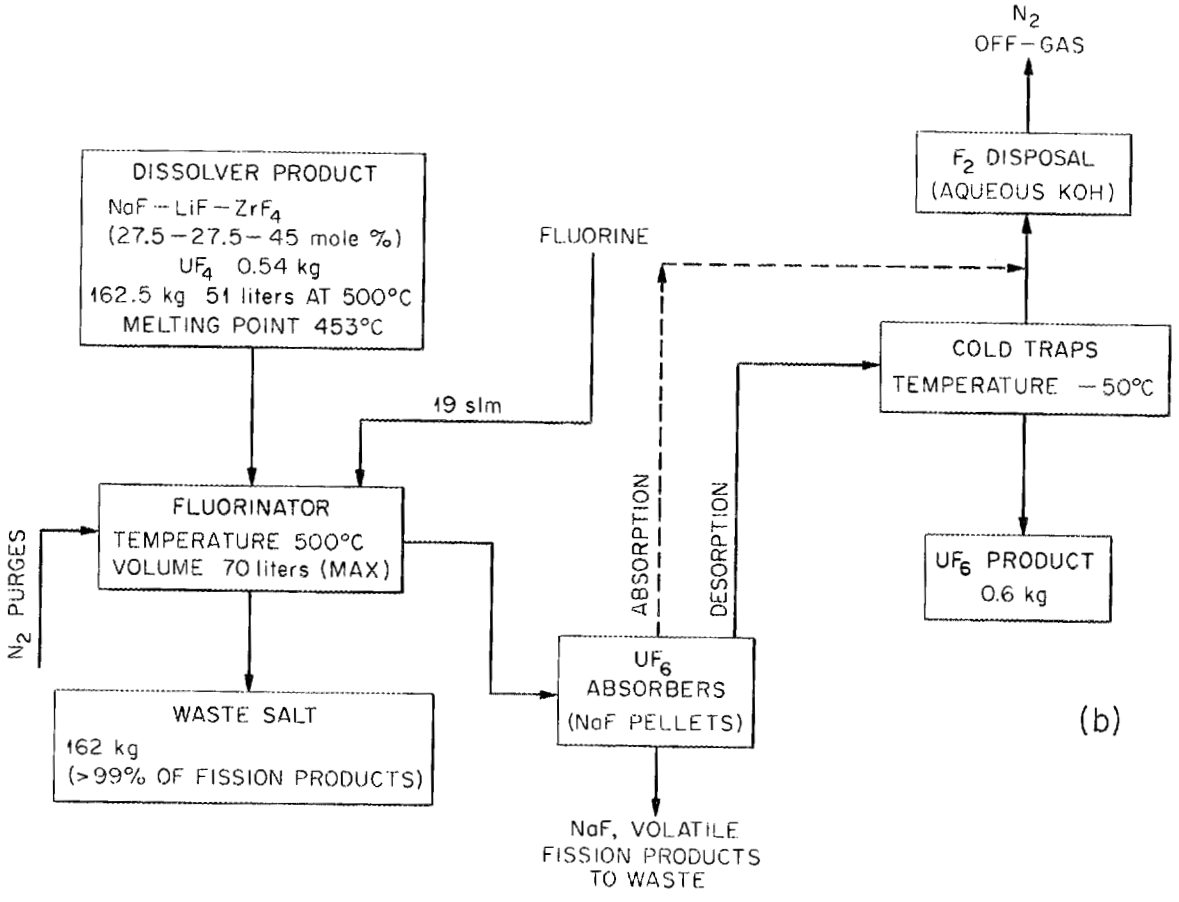

Fig. II-5. Fluoride volatility process flowsheet, NaF-LiF-ZrF_4 salt. (a) Hydrofluorination; (b) Fluorination.

UNCLASSIFIED
ORNL LR DWG. 47847

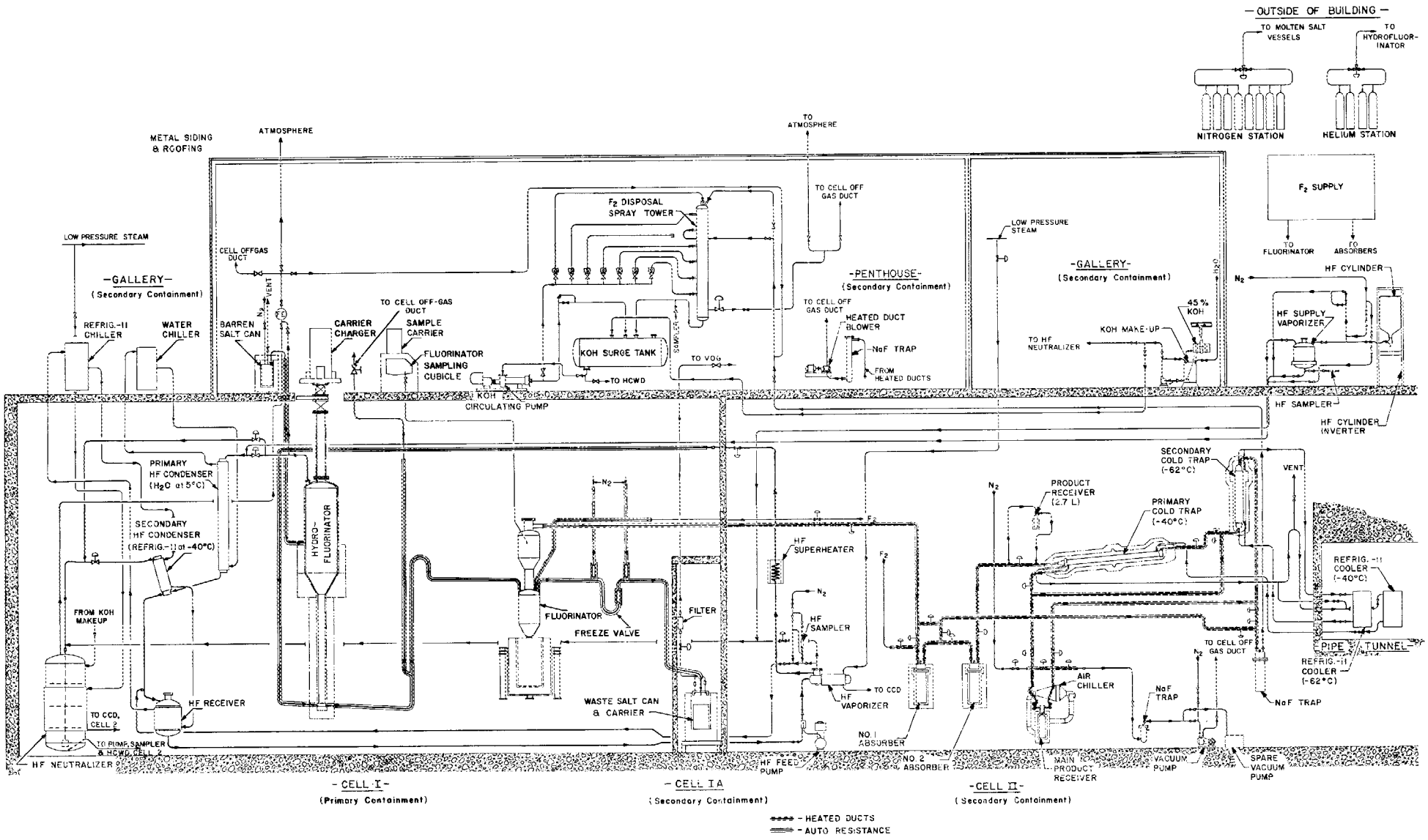

FIG. II-6 VPP SIMPLIFIED ENGINEERING FLOWSHEET

UNCLASSIFIED
ORNL-LR-DWG 39255

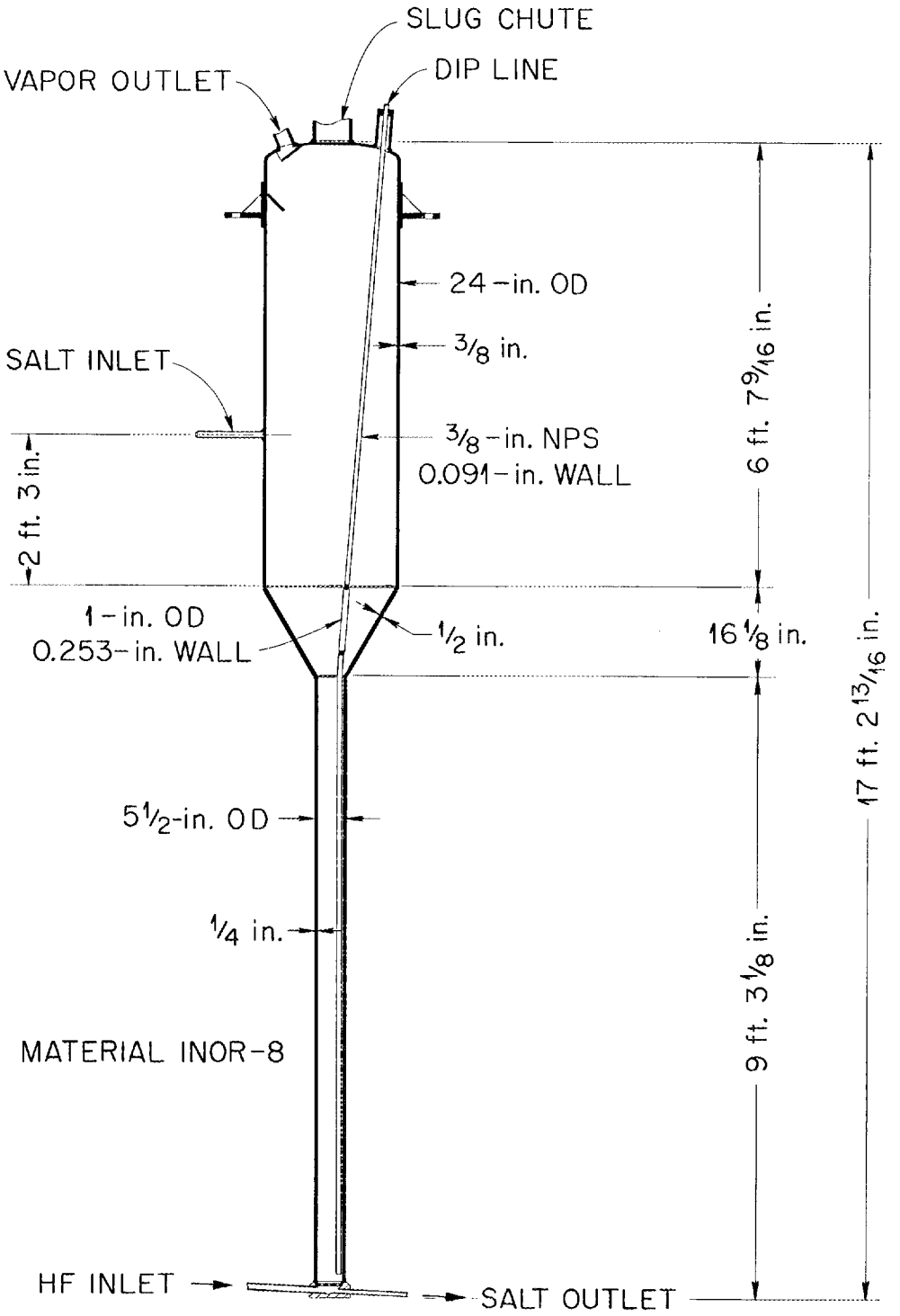

FIG. II-7 VPP Hydrofluorinator
(Dissolver)

UNCLASSIFIED
ORNL-LR-DWG 39150

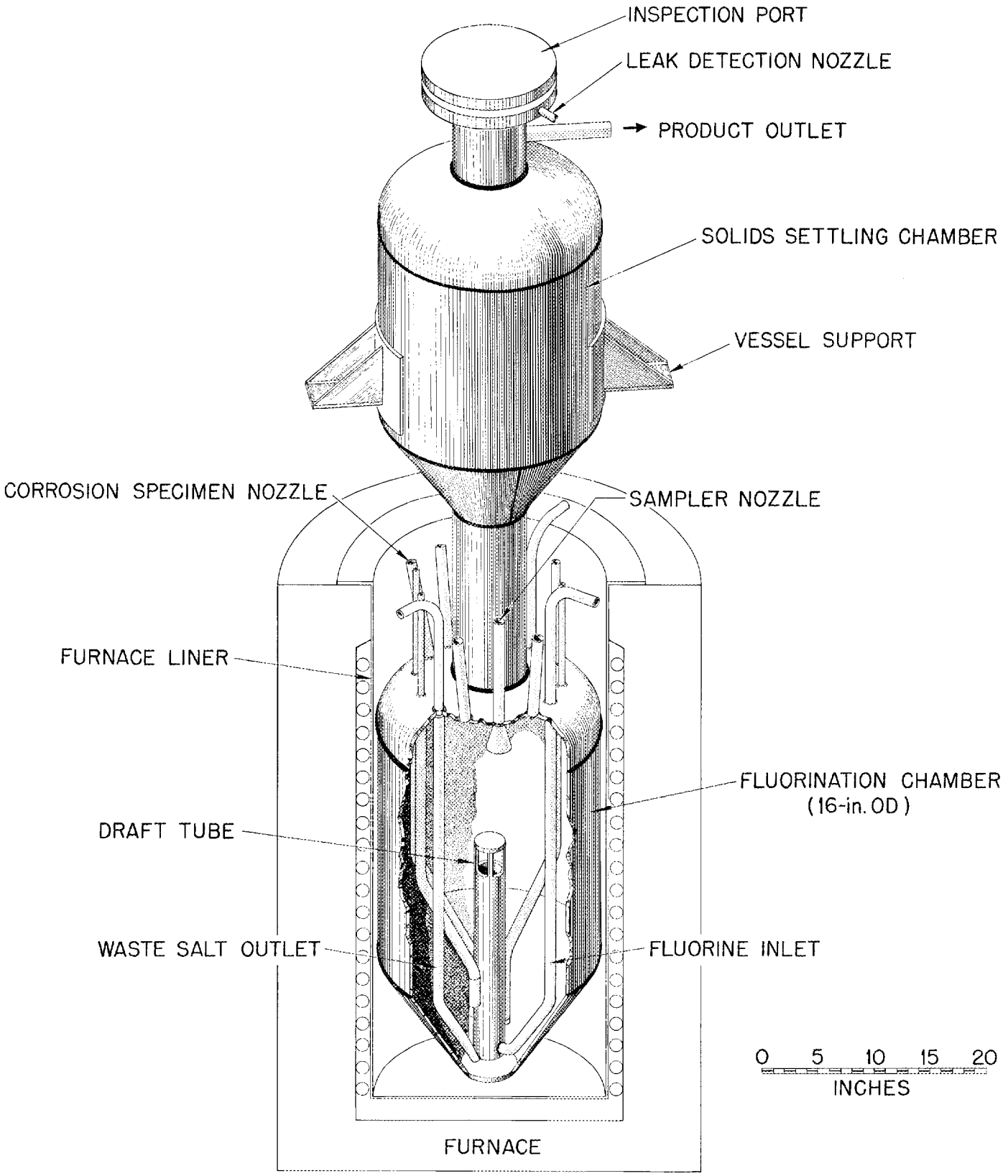

FIG. II-8 FLUORINATOR FV-100 MARK III

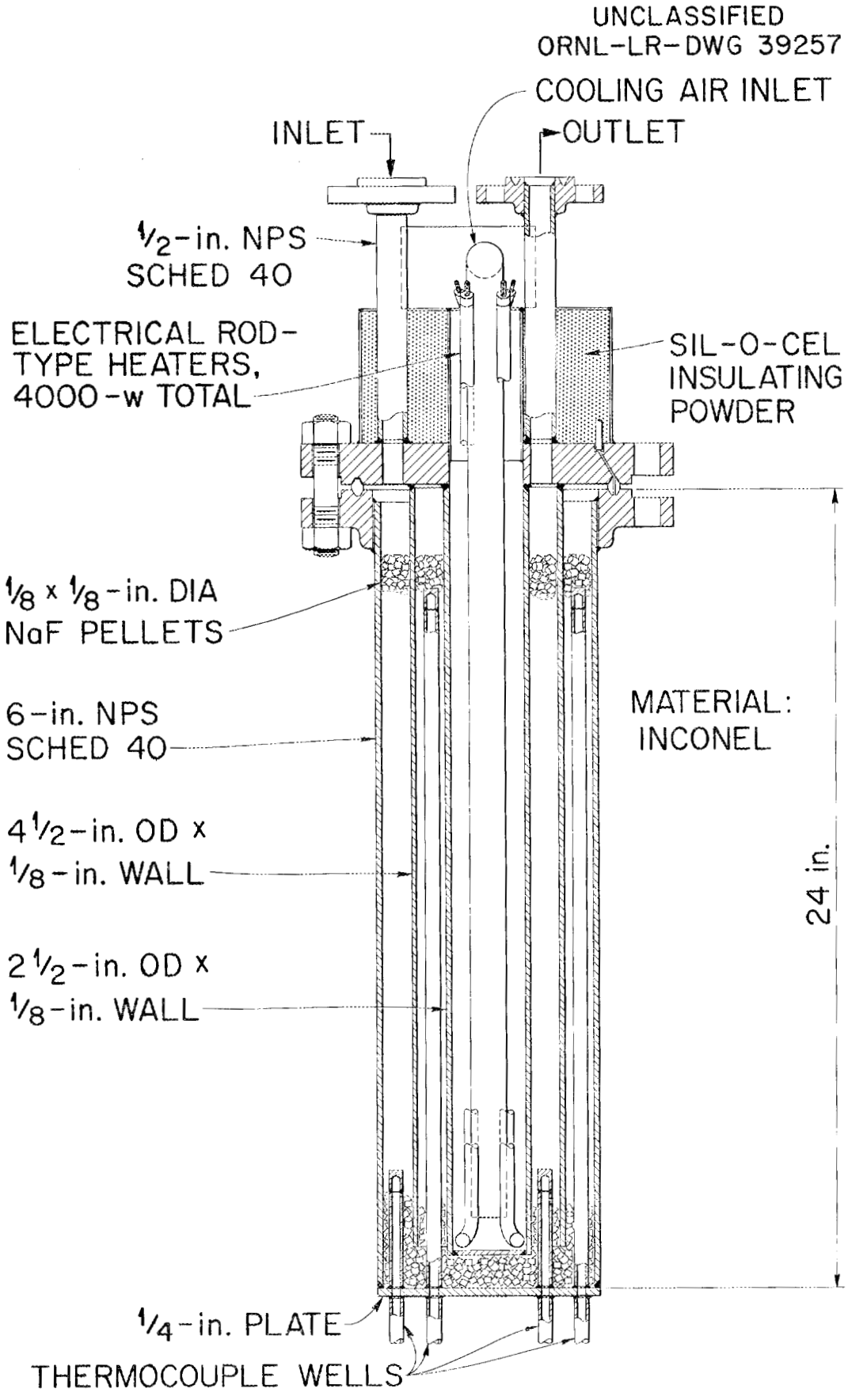

FIG. II-9 ABSORBER FOR VOLATILITY PILOT PLANT

UNCLASSIFIED
ORNL-LR-DWG 19091 R-1

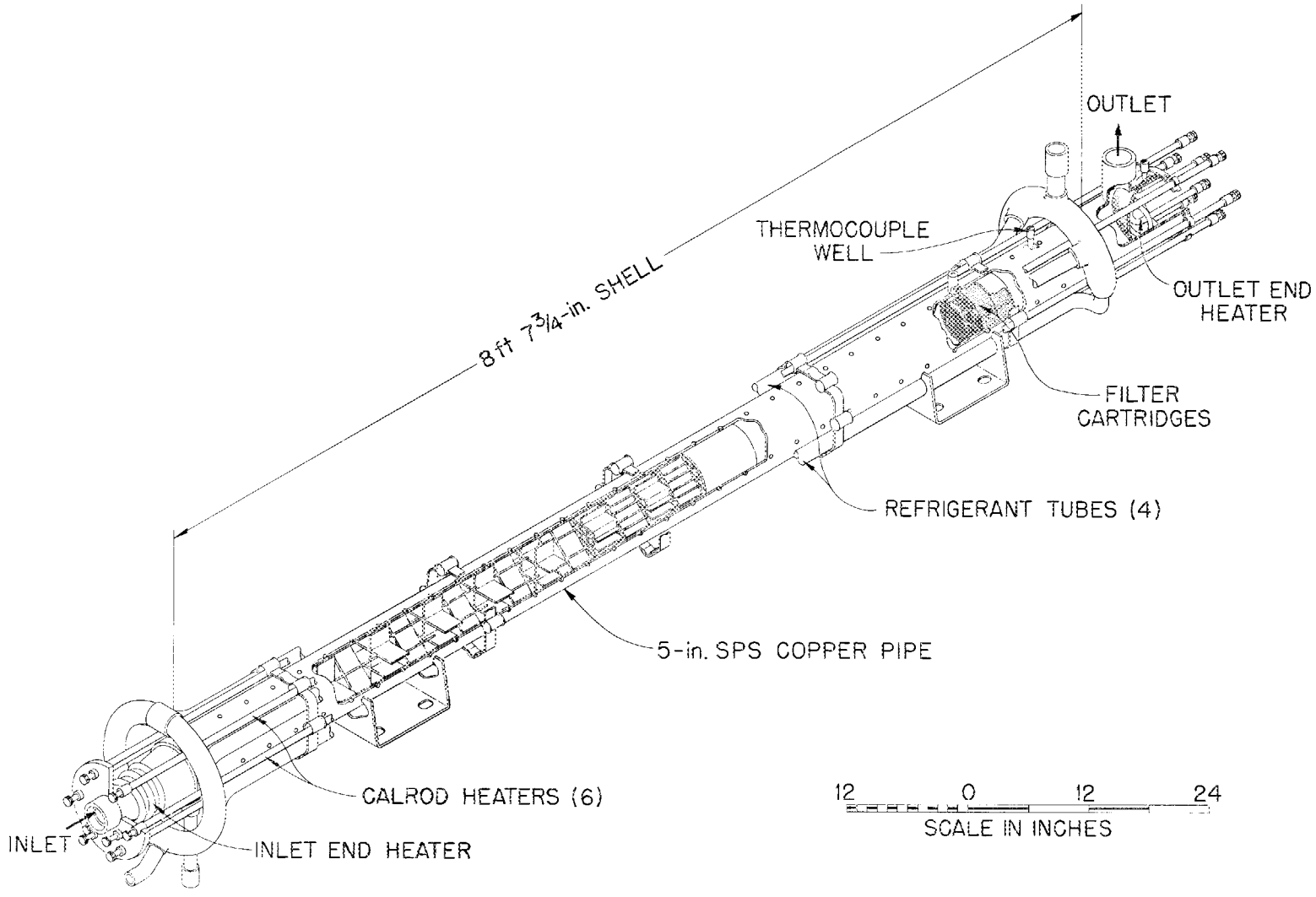

FIG. II-10 PRIMARY COLD TRAP

UNCLASSIFIED
ORNL-LR-DWG 19088 R-1

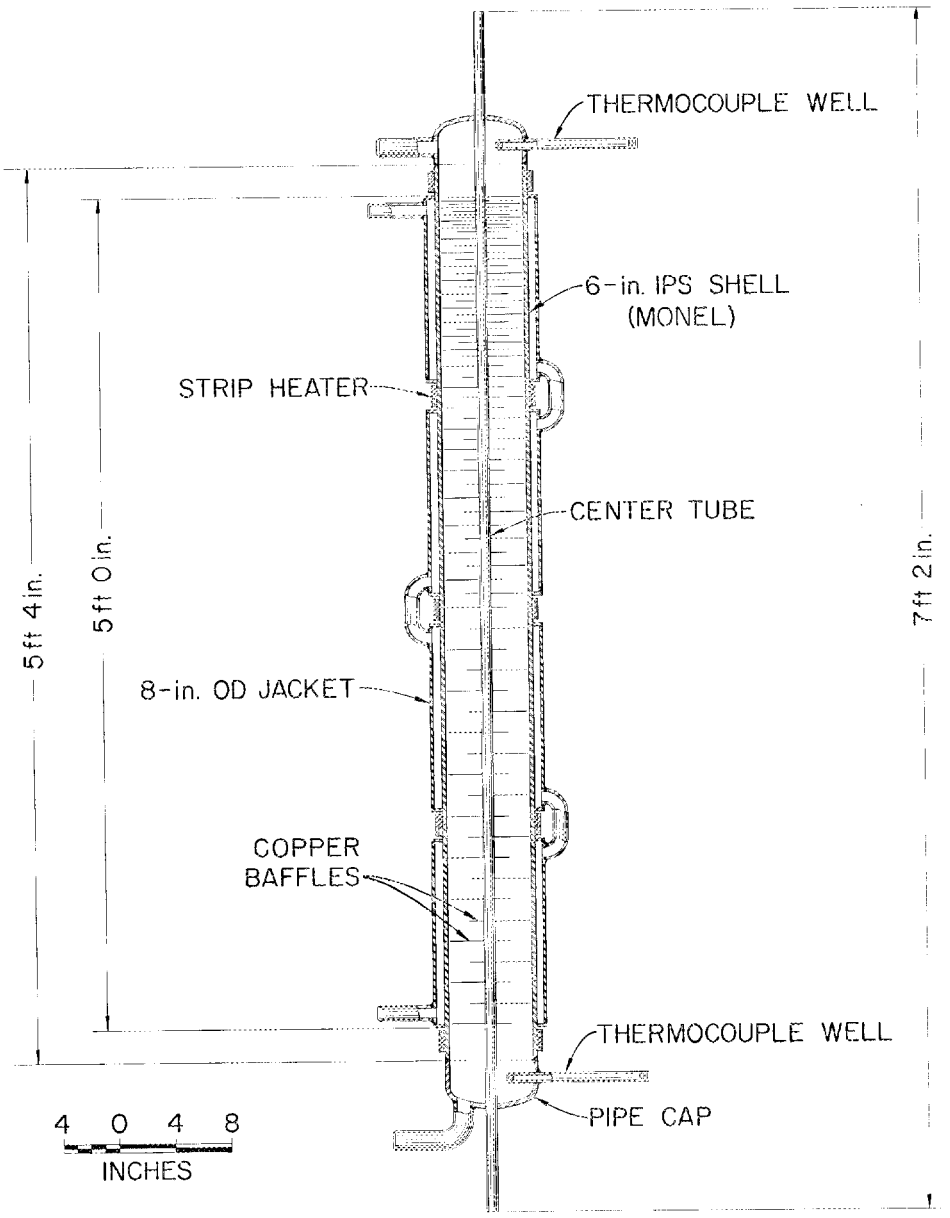

FIG. II-11 SECONDARY COLD TRAP

The equipment containing the molten salt is located in cell 1. This equipment includes the hydrofluorinator, the fluorinator, and waste salt discharge line. Part of the hydrogen fluoride handling equipment, absorbers, cold traps, and product withdrawal equipment are located in cell 2 (Fig. II-12).

3.3 Waste System

The radioactive wastes discharged from the Volatility Pilot Plant include stripped molten salt containing most of the radioactivity, spent NaF pellets, Kr^{85}, and aqueous KOH-KF scrubber solution. The stripped molten salt is from the fluorinator can, where it is allowed to solidify. It is subsequently removed in a shielded carrier for burial (Fig. II-13). The NaF beds do not require frequent replacement and are not expected to be sufficiently radioactive to cause difficulty in replacement. The spent pellets may be canned and buried.

The gaseous effluents from this process are discharged from the HF and fluorine disposal systems, both of which discharge into the cell ventilation system. The HF disposal system has a water-cooled condenser operating at $4^{o}C$ for recovering unconsumed HF. Nitrogen, hydrogen, and uncondensed HF pass through a refrigerant (type 11) cooled chiller-vent, and are then bubbled through aqueous KOH to remove the last trace of HF. Remaining gases are discharged into the cell off-gas duct, where the hydrogen is diluted to below the explosion limit. The fluorine disposal system includes a NaF bed for trapping out trace amounts of UF_6 followed by a spray tower in which the fluorine is removed by aqueous KOH. The residual gas is discharged into the cell off-gas system immediately ahead of the cell off-gas scrubber. The cell off-gas system is equipped with an aqueous KOH scrubber to remove fluorides from the cell off-gas in the event of a vapor phase leak in the process. The gases are discharged from the cell off-gas scrubber into an off-gas duct serving the other cells in the building, and are filtered prior to disposal in stack 3020.

4.0 HAZARDS EVALUATION

4.1 Radiation

Radioactive materials in the process system include uranium, plutonium, and fission products:

Uranium (principally U^{235})	3500 g
Plutonium	10 g
Krypton	100 curies
Total beta-gamma activity	50,000 curies

4.1.1 Radiation Levels

Operations in which radiation levels will exceed 0.003 rem/hr include fuel charging, sampling, withdrawal of fused salt waste, and removal of product:

UNCLASSIFIED
ORNL-LR DWG 48228

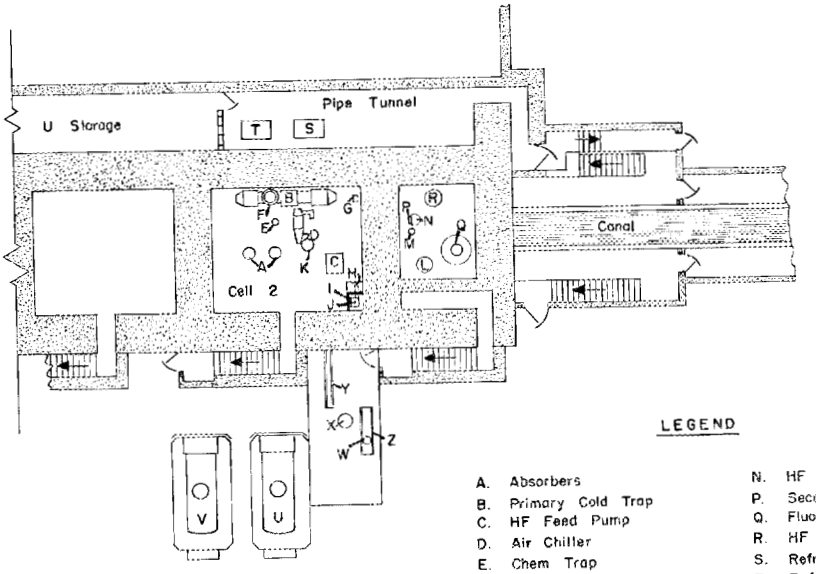

LEGEND

A. Absorbers
B. Primary Cold Trap
C. HF Feed Pump
D. Air Chiller
E. Chem Trap
F. Secondary Cold Trap
G. Decontamination Pump
H. HF Vaporizer
I. HF Furnace
J. HF Superheater
K. Main Product Receiver
L. Hydrofluorinator
M. Primary HF Condenser
N. HF Accumulator
P. Secondary HF Condenser
Q. Fluorinator
R. HF Neutralizer
S. Refrig.-II Cooler (-40° C)
T. Refrig.-II Cooler (-62° C)
U. F_2 Trailer No. 2
V. F_2 Trailer No. 1
W. HF Cylinder
X. HF Supply Vaporizer
Y. Transmitter Rack
Z. HF Cylinder

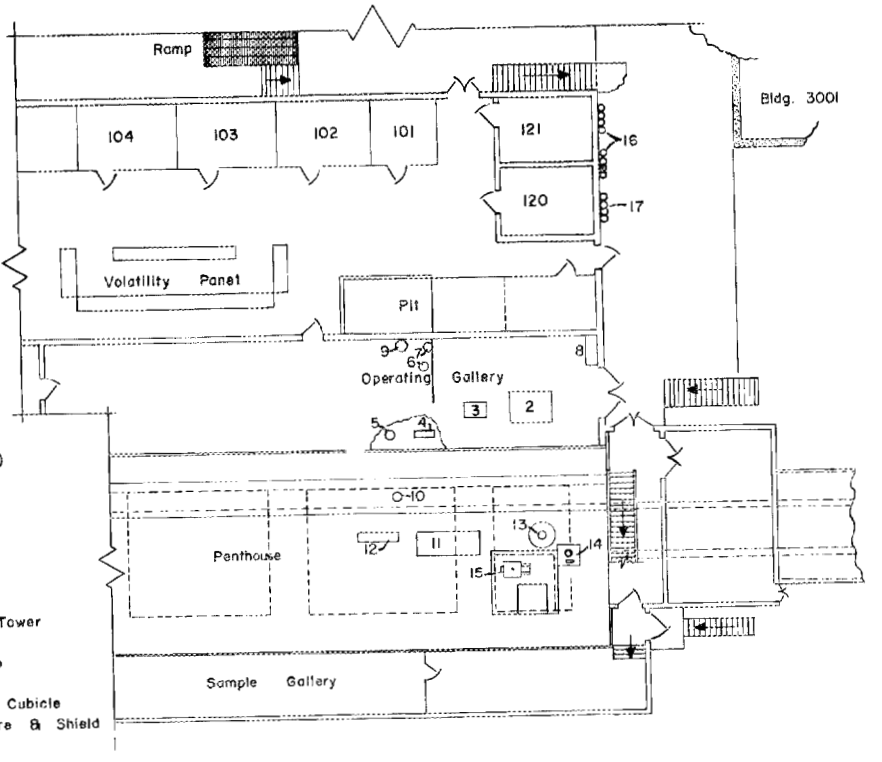

LEGEND

2. Refrig.-II Cooler (HF)
3. Water Cooler (HF)
4. KOH Pump
5. KOH Make-up Tank
6. F_2 Surge Tank
7. Valve
8. N_2 Dryer
9. F_2 Purification Tower
10. F_2 Disposal Spray Tower
11. KOH Surge Tank
12. KOH Circulation Pump
13. Barren Salt Can
14. Fluorinator Sampling Cubicle
15. Hydrofluorinator Closure & Shield
16. Nitrogen Station
17. Helium Station

FIG. II-12 VPP EQUIPMENT LOCATION PLAN

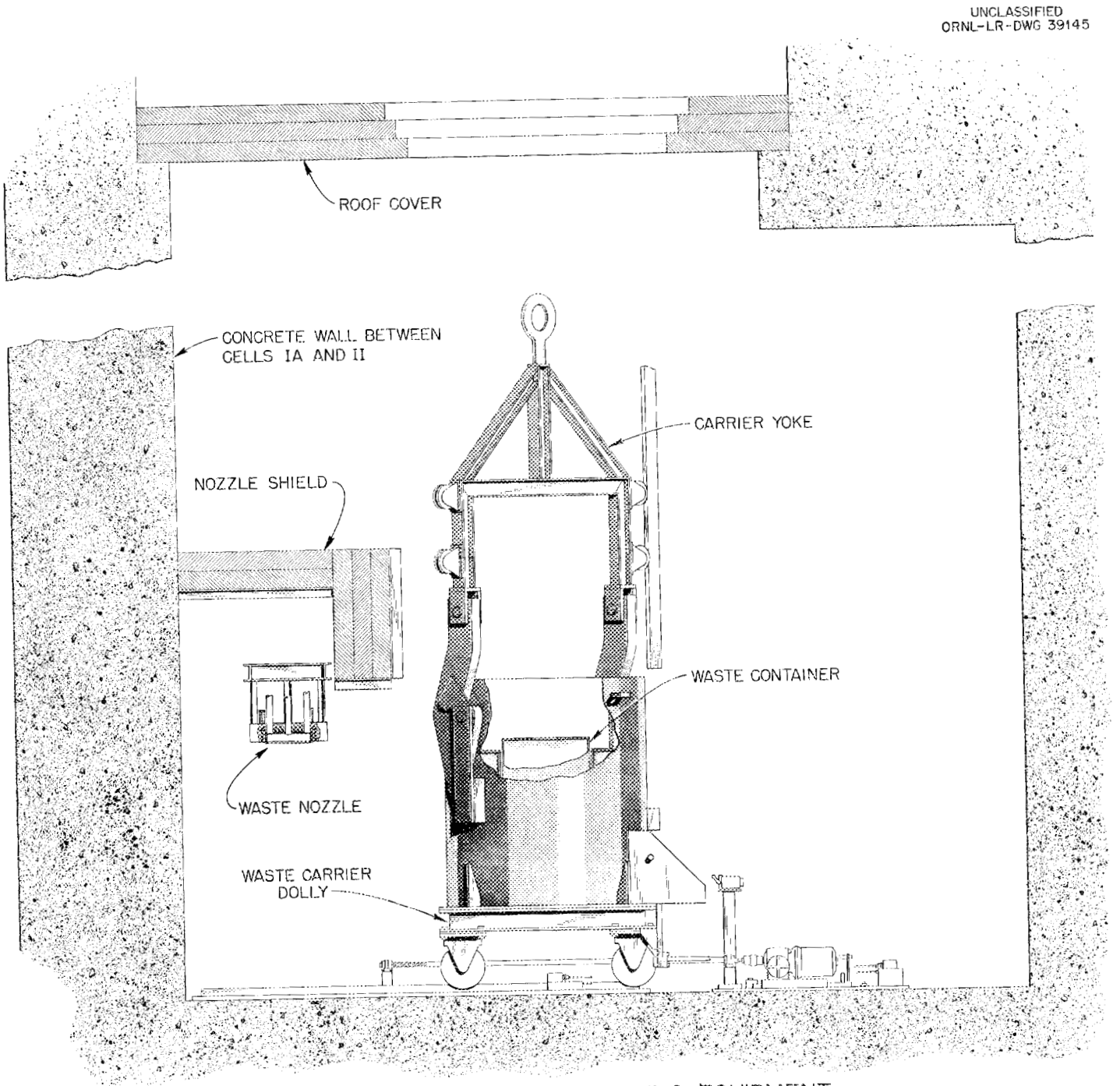

FIG. II-13 WASTE SALT HANDLING EQUIPMENT

Fuel charging	2.8 rem/hr at 1 ft
Waste salt removal	0.03
Sampling	0.01

The highest radiation level is encountered in the charging operation, and occurs while the fuel is being lowered from the charger into the hydrofluorinator. All these are intermittent operations and will be carried out with direct administrative control.

4.1.2 Ventilation Control

About 100 curies of Kr^{85} will be released during the hydrofluorination dissolution operation over a period of ~20 hr. This krypton will be diluted in the cell off-gas system and discharged from a stack at a concentration of ten times the mpc (10^{-4} mc/cc). Under normal atmospheric conditions that exist more than 90% of the time, the krypton concentration will be decreased to less than the mpc value before it reaches the ground. The krypton will be monitored at the base of the stack to assure early detection if greater quantities are present. Other unintentional releases of volatile radioactive material in the cell should be fluoride-connected and consequently would be detected by a continuous fluoride analyzer on the cell ventilation air.

4.1.3 Personnel Exposure Control

The Fluoride Volatility Pilot Plant is zoned for radiation control with stationary radiation monitors located in all work areas. In addition, daily surveys are made with portable instruments. The zones include contamination, radiation, and regulated zones (Fig. II-1).

4.2 Chemicals

The principal chemicals used in the Volatility Pilot Plant are: HF, F_2, NaF, UF_6, aqueous KOH, various decontaminating agents, and refrigerants types 11, 13, and 22 (Table II-1). The fluoride chemicals are definitely hazardous to personnel but are being routinely used in large-scale industrial operations and other atomic energy facilities. This is probably the largest scale use of fluorine and HF in connection with highly radioactive chemical operations that has been attempted. Table II-2 summarizes hazards to personnel which would occur upon exposure to the chemicals used in the VPP; Table II-3 lists pertinent mpc values.

Since all volatile radiochemicals are contained in cells and since a scrubber will be installed in the cell ventilation exit duct, any credible chemical accident should not interfere with operations outside the containment area. A serious release of anhydrous HF or fluorine might temporarily interfere with nearby operations, but interference should last only until the offending gas had been dissipated. The following sections discuss safeguards which have been adopted to minimize the possibility of HF and fluorine releases.

Table II-1. Inventory

Barren salt per dissolution	
NaF	19.92 kg
LiF	12.31
ZrF_4	53.57
Total	85.80
HF per hydrofluorination (40% utilization)	91.3 kg
Fluorine per fluorination	2.16 std cu m
Desorption (once)	3.6
Preconditioning and purging	1.0
Capacity of two F_2 trailers (avg)	37.0
NaF	
Two absorbers	14.5 kg
Three chemical traps	21.2
F_2 purification tower	10
Total	45.7
KOH (45%) consumption per batch	
F2 disposal	59 kg
HF disposal	49.8
Total	108.8
Product UF_6 (per desorption and cold trapping)	4.6 g
Waste (per batch)	
Depleted salt	162.0 kg (50.3 liters at 500°C)
Hydrogen	1.825 kg (20.4 std cu m)
NaF	assumed same as original charge
KOH	assumed same as original charge

Table II-2. Personnel Hazards from Principal VPP Chemicals and Refrigerants

Description	Skin Contact	Inhalation	Ingestion
HF in air			
Dilute	Delayed action burns	Severe irritation	
Concentrated	Severe burns	Pulmonary edema, potentially fatal	
F_2 in air			
Dilute	Delayed action burns	Severe irritation	
Concentrated	Severe burns	Pulmonary edema, potentially fatal	
NaF	Assumed undesirable	Undesirable bone changes	Bone changes may be fatal, depending on amount
Barren fluoride salts	Assumed undesirable	Undesirable bone changes	Bone changes may be fatal, depending on amount
UF_6 in air			
Dilute	Probably HF type burns	Damage due to effects of emitters, fluoride poisoning, and kidney damage	More serious than ingestion
Concentrated	Severe burns	Same as for dilute	Same as for dilute
KOH, 2 M	Burns		Severe internal burns
Refrigerant types 11, 13, 22		Asphyxiation is most serious problem and is most unlikely	

Table II-3. Maximum Permissible Concentrations in Air for Principal VPP Chemicals and Refrigerants

	MPC_{air}	Reference
HF	1.5 - 3 ppm	Elkins, "The Chemistry of Industrial Toxicology," John Wiley and Sons, 1959
F_2	1 ppm	D. L. Stoddard, ORGDP, personal communication
NaF	2.5 mg/cc	Sax, "The Dangerous Properties of Industrial Materials," Reinhold Publishing Corporation, 1957
$U^{235}F_6$	5×10^{-10} μc/cc	NBS Handbook 69, "Maximum Permissible Body Burdens and Maximum Concentrations of Radionuclides in Air and Water for Occupational Exposure"
	0.05 mg/m^3	Elkins, loc. cit.
	Toxicity Rating*	
Refr.-11 (CCl_3F)	Group 5A	
Refr.-13 ($CClF_3$)	Probably Group 6	
Refr.-22 $CHClF_2$	Group 5A	

*Group 1, very toxic; Group 6, no evident toxicity (Du Pont, "Kinetic Technical Bulletin, B-2, 'Freon' Compounds," 1954)

4.2.1 Hydrogen Fluoride

Exposure to HF is possible in several areas if all safety precautions should fail. Liquid and/or vapor contact is possible at the HF charging station outside Bldg. 3019 at cell 2 entrance (Fig. II-14). Vapor contact is possible but liquid contact highly improbable in cell 2 in the vicinity of the pump and vapor-generator shielded cubicle. Vapor and/or liquid exposure in cell 1 would be possible to anyone in the cell, but this area is considered inaccessible and no one should enter during operation. Vapor exposure in any other area would require escape of vapor from the cells or rupture of instrument transmission lines outside the cells, neither being very probable.

The possibility of a release has been minimized by careful design, choice of recommended construction materials, and close inspection during fabrication of vessels and process piping. The system for unloading vendors' HF cylinders has been designed in strict accordance with MCA recommendations.* For example, cylinders will not be used as process supply vessels; they will be emptied by nitrogen pressure rather than by heating; the electrical heaters used to heat the HF supply vaporizer, or HF storage tank, are sized so that a safe pressure cannot be exceeded in the tank; and safety relief valves protected by rupture disks are provided to protect against excessive pressures.

In all HF operations requiring performance of duties locally, suitable rubber clothing and face shields or masks will be mandatory. At the HF charging station a plastic shield will protect operators from direct spray in case of a leak. A safety shower is strategically placed. In cell 2 the steel radiation shield will stop direct spray from the pump and vapor generator, and a plastic shield will stop spray from the sampler. An air sweep providing about 10 air changes per hour will reduce vapor hazard. As mentioned before, entrance to cell 1 is prohibited during operation.

4.2.2 Fluorine

The fluorine supply for the VPP is contained in two steel tank trailers which are located outside of Bldg. 3019 adjacent to the south side of cell 2. When full, each tank contains approximately 18 standard cubic meters of fluorine at approximately 55 psig and 25°C. Fluorine control instruments, valves, and fittings are located under the sampling gallery in the same region. Flexible connections from the tank trailers to the fluorine station consist of 3/8-in.-o.d. x 0.065-in.-wall nickel tubing. Two pigtail connectors are provided for each trailer, one for fluorine flow to the process and one for direct venting through a 1/2-in. NPS line that extends approximately 1 ft above the roof of the pilot plant. Flare type fittings are used at the trailer pigtail connections, and these fittings are inspected frequently. The tanks and their valve and gage manifolds are also inspected by the ORGDP Mechanical Inspection Department every two years. These inspections consist of ultrasonically checking the plate and welds for thickness and soundness, removing the manhole cover, and visually inspecting the interior

---

*Hydrofluoric Acid, Chemical Safety Data Sheet SD-25, Manufacturing Chemists' Association, 1957.

UNCLASSIFIED
ORNL-LR-DWG 39256R1

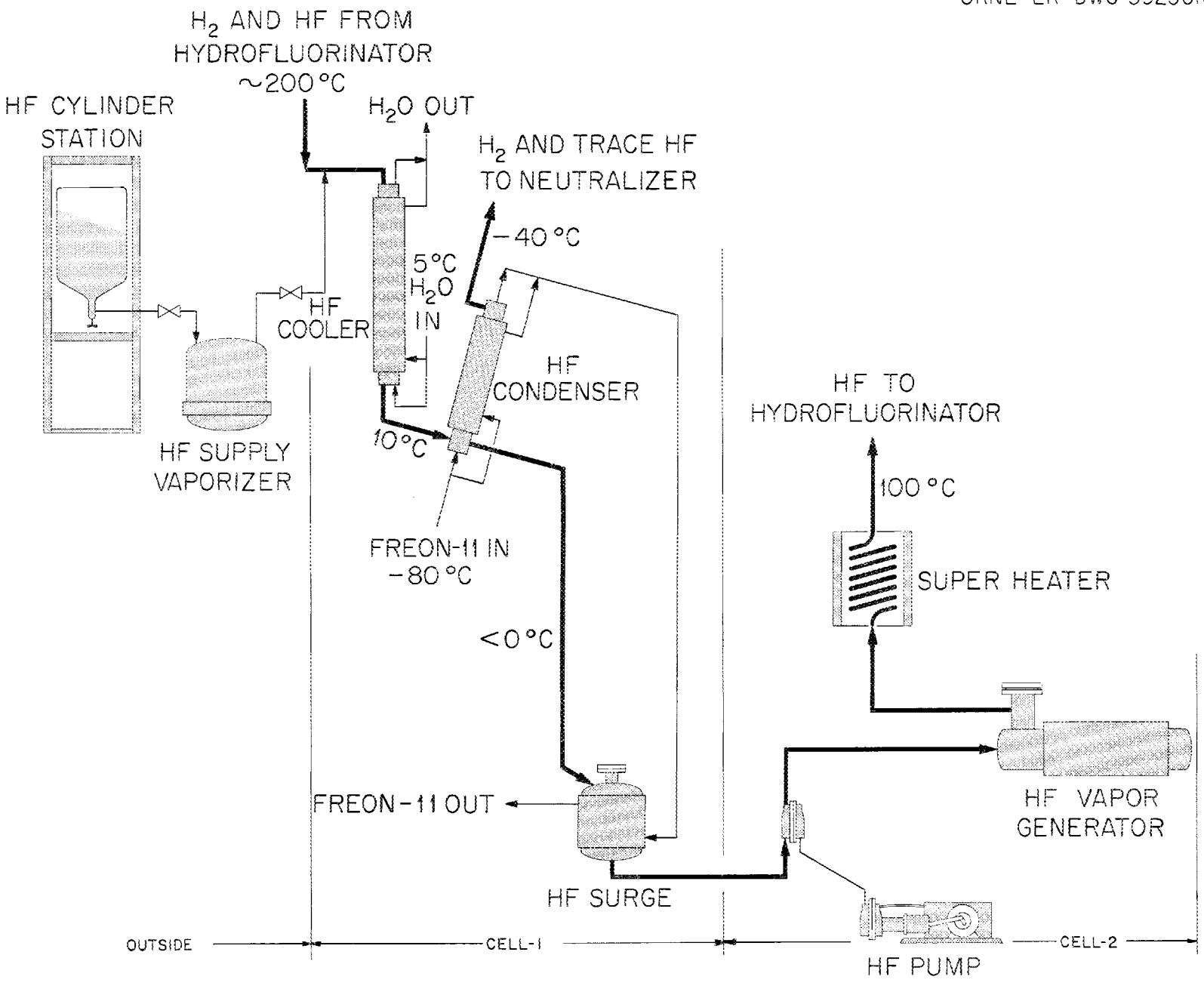

FIG. II-14 VPP HF Recycle System.

of the tank, plus a detailed inspection of the manifold valves and gages. Usually, replacement or repair of some of the valves and gages is necessary. Finally, the vessel is pressurized to 75 psig with air and leak-tested with soap solution. Inspection records are maintained on the IBM system so that reminders of the inspection due dates are automatic. Inspections were formerly made each year, but incidence of defects was so low that the inspection period was relaxed to every two years.

To prevent any sudden release of a large amount of fluorine from a tank trailer, an automatic shutoff actuated by a high fluorine flow rate was installed (Fig. II-15) during the ARE fuel recovery program. Whenever the fluorine flow rate exceeded 56 standard liters/min (2 standard cu ft/min), flow switches actuated a solenoid valve in the air supply to close the shutoff valve. Although no emergency ever arose to demonstrate the effectiveness of this system, its function was demonstrated on numerous occasions. Each time fluorine flow was started from a trailer into empty piping, 56 slm was exceeded, and the fluorine was shut off. For operating convenience the flow switch was manually by-passed until sufficient back pressure was built up in the piping to reduce the flow rate to normal (<20 slm). To guard against leaving the by-pass open, a "dead-man" switching arrangement will be installed in place of the ordinary on-off switch formerly used, so that the by-pass will be in effect only when the switch is manually held closed.

Although fittings were welded whenever practicable, ring-joint flanges with annealed copper rings have been used satisfactorily. All valves and fittings are leak tested before a run is made. If Teflon or Kel-F valve disks or gaskets are used, they must be kept clean from any organic contaminants. Otherwise, exposure to fluorine will cause combustion of the plastic, resulting in fluorine leakage. Such an incident occurred during a development program and caused a general evacuation of Bldg. 3019. Two craftsmen suffered temporary discomfort from inhalation of fluorine at the time. All plastics are now cleaned with acetone prior to service; however, CCl_4 is preferable.

To prevent fluorine from entering the nitrogen blanket system, thereby possibly causing damage to and leaks in instrumentation, a fluorine-nitrogen interlock was installed. Thus fluorine flow is automatically shut off whenever the fluorine line pressure rises to within 0.5 psi of the nitrogen pressure and/or the fluorine pressure exceeds a set value, usually 4.5 psig.

4.3 Explosions

Hydrogen evolution from the hydrofluorination operations is the only recognized explosion possibility in the process. The maximum rate of hydrogen evolution is 6 cfm. The reaction is carried out in a nitrogen atmosphere and is diluted with 3000 cfm of air when discharged into the cell off-gas duct. The resulting hydrogen concentration, 0.2%, is well below the lower explosive limit of 4%. A commercial flame arrestor adapted for use with hydrogen will be installed in the hydrogen line prior to its entry into the cell ventilation duct.

UNCLASSIFIED
ORNL-LR-DWG 45276

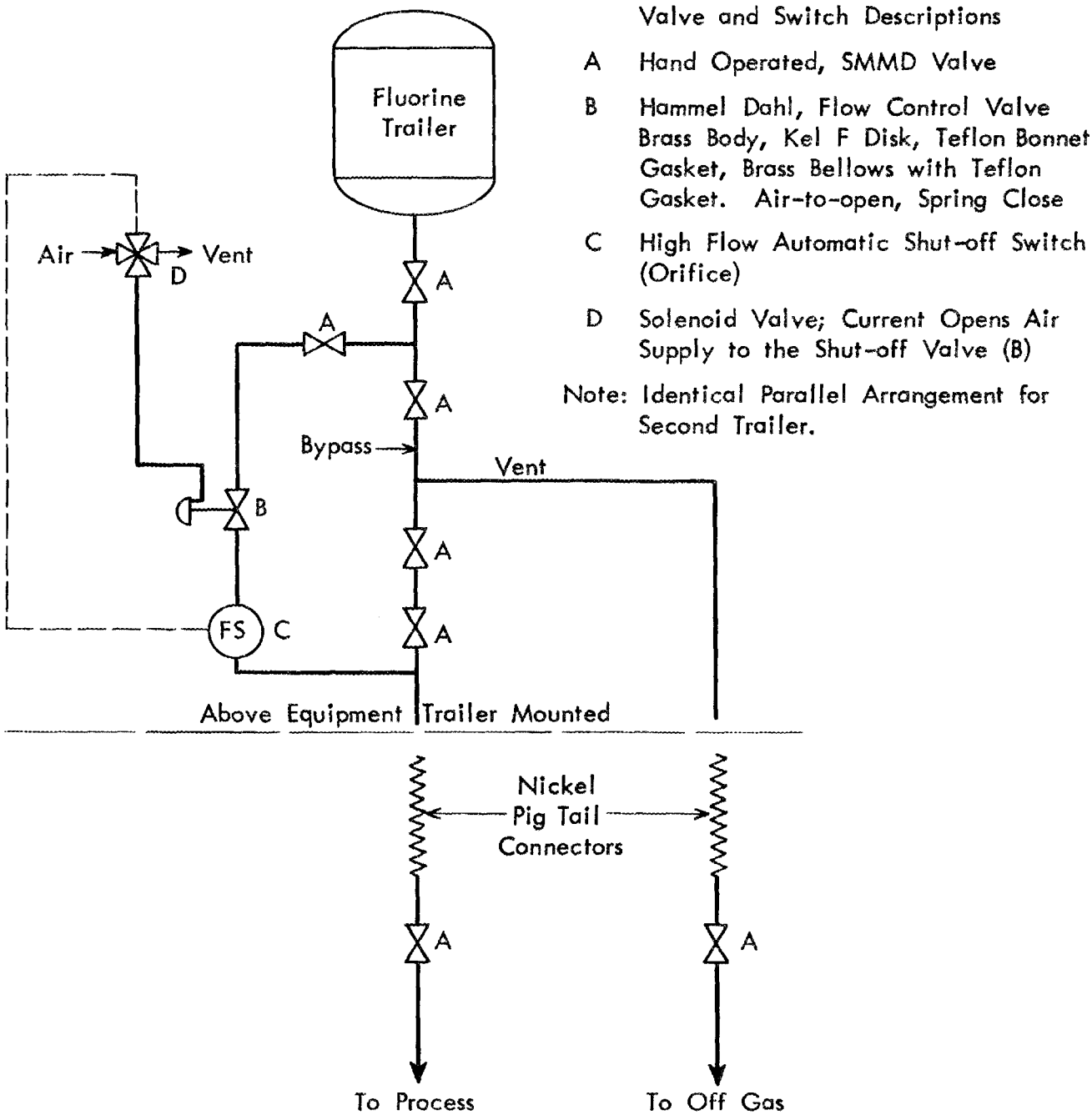

Fig. II-15. VPP Fluorine Supply System.

4.4 Fire

Fluorine is the chief source of fire in this pilot plant. The maximum amount of fluorine in the system at any time is about 200 liters.

Fluorine reacts spontaneously with organics and may react with the materials of construction in the system. These hazards are prevented by eliminating organics from the system and by carefully conditioning the system before each startup by exposure to dilute fluorine in nitrogen diluent.

In the event of a fluorine reaction, the fluorine supply is automatically cut off and the small amount in the system is quickly consumed. The system is tested at the start of each fluorination run.

4.5 Criticality

The VPP system may contain at one time as much as 3.5 kg of U^{235}. Only about 0.5 kg is added during each fluorination, but several successive batch runs may be collected on the NaF beds before desorption. After completion of a run a water flush of the system will be necessary to remove the residual UF_6 (approximately 300 g).

The VPP equipment is geometrically safe and the system contains less than the critical mass of U^{235} for all normal process operations. However, during the water flushing geometrical and mass control are both lost and therefore concentration control will be used. Concentration control will be achieved by the addition of neutron poisons in the water flushes. A second method of consideration is to salt the water flushes to limit the uranium solubility.

4.6 Maximum Credible Accident

The maximum credible accident was first thought to be the destruction of the filters in the cell ventilation duct by HF or fluorine with release of the activity contained thereon. The installation of an aqueous KOH cell ventilation air scrubber should eliminate this as a credible accident.

The next most likely credible accident appears to be a critical incident in either the hydrofluorinator or the fluorinator in cell 1 during the first water flush after a long series of runs.

In cell 2, the 6-in. absorber can be removed and the NaF pellets dumped along with any residual U^{235}. The 5- and 6-in.-dia cold traps have been ruled geometrically safe if the refrigerant and vacuum jackets do not contain water. To eliminate this possibility, the refrigerant system will be pressurized as a leak detection method, and the vacuum connections to the jackets will be disconnected for free drainage.

In cell 1, a buildup of finely divided uranium metal is barely conceivable in the 24-in.-dia de-entrainment section of the hydrofluorinator. Collection of hydrolyzed UF_6 in the 16-in.-dia de-entrainment section of the fluorinator is also conceivable. Introduction of water into the vessels under the above conditions might cause an incident if material balance controls failed. Indications are that since the questionable vessels are shielded by 4 and 5 ft of concrete with personnel excluded from the primary containment area, the external results would not be particularly troublesome.

5.0 OPERATING PROCEDURE

5.1 Method of Approach

The Volatility Pilot Plant operation is based on a run sheet procedure. These run sheets are prepared prior to each run by the data analysis group and checked by the pilot plant section chief and the operation supervision.

5.2 Master Run Sheet

The master run sheet (attached) shows the separate operations required for any run. This can be seen to fit the process description in Sect. 3.2. Operations supervisors check off each step upon completion. Deletions or changes in sequence are made as required by the chief of operations.

5.3 Individual Run Sheets

Individual run sheets are prepared as check-off lists of all required actions, valve positions, instrument settings, etc. They are continually updated and improved by making changes dictated by experience. A typical run sheet, Desorption of Product, is attached. The extreme detail illustrates the high degree of control used to eliminate errors of omission or judgment.

5.4 Categories of Run Sheets

5.4.1 Primary Process Operations

These operating steps constitute the heart of the process, the fundamental chemical and physical chemical reactions. They are, as described in Sect. 3.2: (a) hydrofluorination of metallic fuel elements with HF, (b) fluorination of hydrofluorinator product (including sorption of fluorinator product on sodium fluoride), (c) desorption of product (including product collection by condensation and solidification), (d) product removal by liquefaction-vaporization and condensation.

5.4.2 Secondary Operations

This category includes service jobs and accessory equipment operation not fundamental to the process. It includes run sheets for caustic makeup, operation of refrigeration units, HF sampling, etc. Some of these operations are partly preventive in purpose, such as operation of scrubber tower for removing hazardous gas from the off-gas stream.

5.4.3 Mechanical Operations

Run sheets are used for this kind of work because it involves handling of massive equipment containing fuel elements and radioactive waste. Strict control is required for accountability of primary process materials as well as for prevention of physical accidents. The run sheets concerned are those for loading, transporting, and unloading the fuel and waste carriers.

5.4.4 Preventive Measures

Certain run sheets have the main purpose of guarding against hazards and equipment failure. This includes, for example, flange leak-detector operation, purging of fluorine lines, fluorine conditioning, "cold" leak testing of FV-1000, etc. Fulfillment of these eliminates or warns of certain hazardous releases of chemicals or radioactivity.

5.4.5 Miscellaneous Operations

Procedures for HF trap regeneration and decontamination are not a regular part of each run, but are performed only when necessary.

In addition, all run sheets are accompanied by suitable data sheets for data read from nonrecording instruments. The desired data are recorded by operators according to a specified schedule. Some of this is primarily to ensure that the operators examine the important items regularly.

5.5 Maintenance Procedures

Pumps, agitators, refrigeration machines, etc. are serviced by craftsmen according to recommended practices. Instruments are attended daily by instrument mechanics. Analyzers are checked daily by operators.

Remotely operated valves can be remotely checked by operators for seat leakage. This is done at the discretion of the supervisor when leakage is suspected, or on a periodic basis.

Vessel and equipment corrosion is of most concern in the molten salt and HF handling equipment. During "cold" operation this is checked frequently by visual inspection, where possible, and by Vidi-gage. Prior to "hot" operation some lines may be cut open for inspection. The corrosion history will determine the need for corrosion inspection during "hot" operation.

5.6 Design for Operational and Equipment Safety

A system of single and interlocked pressure and flow switches takes automatic corrective action and/or sounds an alarm in case of flange leakage, rupture of fluorine equipment, or reversal of nitrogen-fluorine supply pressures. In the case of the fluorine difficulties, an automatic valve on the fluorine trailer is shut by a flow switch.

A secondary scrubber is used to back up the primary caustic neutralizers for fluorine and HF. If an operational error or accident should permit either to get past the secondary scrubber, the fluoride detector will sound an alarm. Similar detectors analyze air in the cells and in other locations where a leak would release fluorine, HF, or process fluorides (UF_6 or fission product fluorides).

In case of an HF leak it might be desirable to neutralize whatever HF the system contains by dumping it to the neutralizer. To this end, the HF system was designed with the minimum practical inventory of acid.

Level alarms in HF and caustic tankage prevent operational errors from low levels, which could result from accidental loss or incorrect initial inventory.

6.0 EMERGENCY PROCEDURES

6.1 System of Alarms

The experimental process of this pilot plant has no precedent whereby practices and procedures have been established. Laboratory development, corrosion studies, and unit operations work have demonstrated processing methods to eliminate potential hazards in certain areas and the need for precautions still existing in others. The chemical engineering and mechanical engineering designs have taken into account the remaining potential hazards or emergencies. All automatic safeguards provided are emergency procedures in themselves, as described in the section on operating procedures, and require no further mention. However, the alarms that do not incorporate automatic action require immediate, or emergency, treatment by the operators. These are:

a) Ring-joint flange leakage: External pressure is maintained on all ring-joint flanges, and loss of pressure from a leak sounds an alarm. The operator determines the size and source of the leak by the method prescribed in the flange leak detector run sheet. From this it is decided if shutdown is required; otherwise the indicated correction is performed.

b) Fluoride detection in atmosphere: Fluoride leakage to the atmosphere in any equipment area sounds an alarm. The operator determines from the size and area of the leak if a complete shutdown is necessary, or if the HF must be dumped to the caustic neutralizer as mentioned in Sect. 5.6. If not, he carries out the corrective measures indicated by the panelboard instruments.

c) UF_6 cold trap leakage: Leakage of a UF_6 cold trap into its surrounding vacuum jacket would sound an alarm. UF_6 would be contained by the jacket, but the operator would have to remove the uranium content of the trap and isolate it for repairs.

d) Caustic supply and circulation: Improper caustic supply or circulation for off-gas fluoride removal would sound an alarm. HF or fluorine flow would be stopped until the situation was corrected.

e) HF surge tank low level or high pressure: Either condition would sound an alarm. HF circulation would be stopped until the cause was determined and corrected.

f) Loss of cell negative pressure: An alarm would sound in case of loss of negative pressure in either cell and simultaneously the cell intake closure device would close automatically. The operator would manually stop fluorine and HF flows.

6.2 Normal and Total Emergency Shutdown

6.2.1 Normal Shutdown

Completion of any run sheet would return the equipment concerned to the shutdown state by the proper procedures.

6.2.2 Total Emergency Shutdown

Pulling the main power switch would constitute a total shutdown and would accomplish the following:

a) Stop all pumps and agitators.
b) Set all remotely operated valves in the fail-safe position.
c) Stop HF and fluorine flows.
d) Shut off all heaters and furnaces.

Master Run Sheet

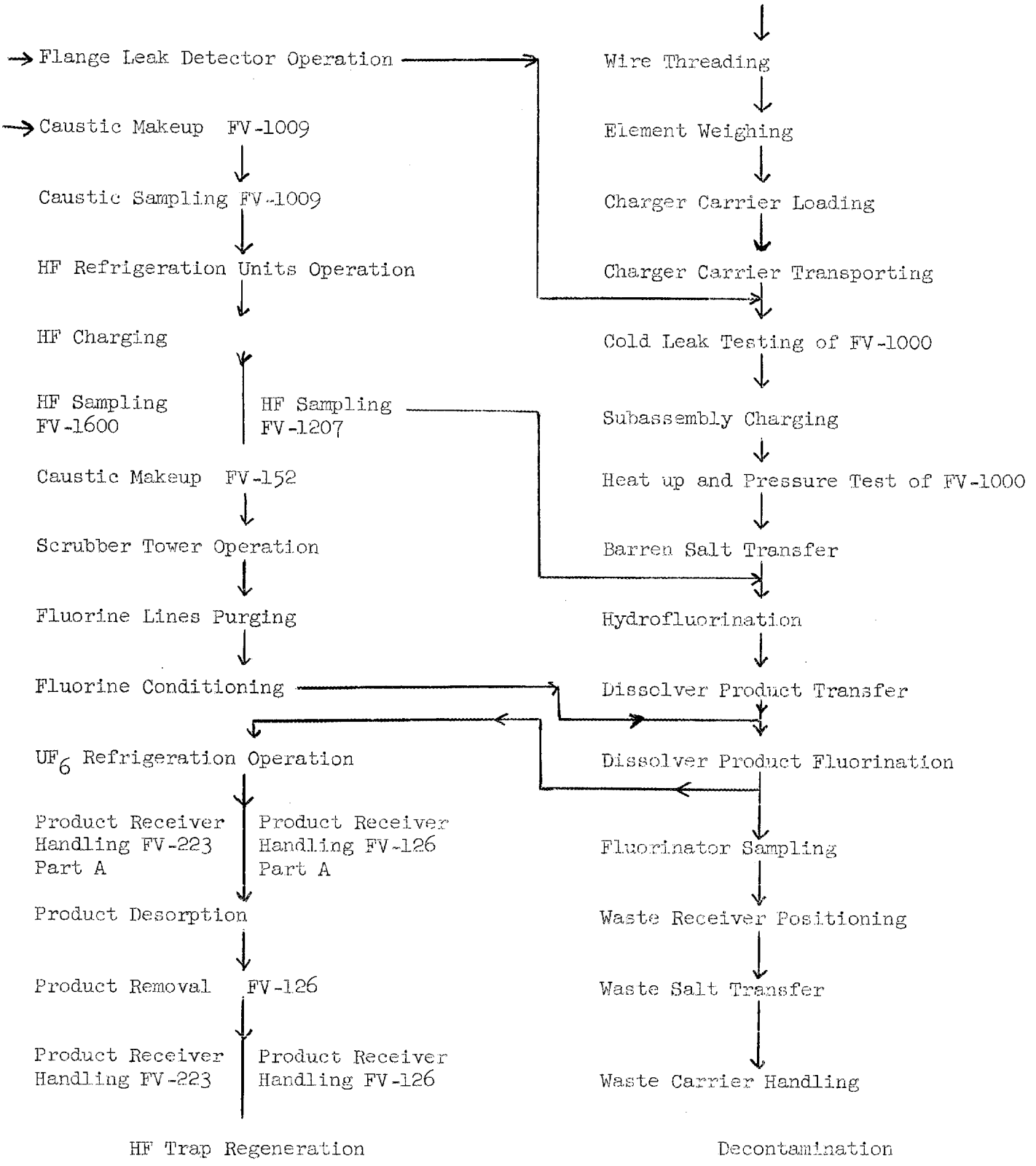

DOP _____

Date _____

Time _____

Oper. _____

DESORPTION OF PRODUCT

_____ 1. Sample KOH in FV-152 and record liquid level _____%. If level is below _____% proceed to caustic make-up procedure. Code SI-_____. Resample after make-up _____.

_____ 2. Check that FV-223 has been installed and is ready for operation. (See product receiver handling (FV-223) procedure _____.)

_____ 3. Open the following valves on the panelboard: HS-120-4 _____, HS-220-1 _____, HS-222-1 _____, HS-222-3 _____, HS-222-4 _____, HS-121-2 _____, HS-121-1 _____, HS-100-2 _____, HS-120-3 _____, HS-124-1 _____, V-100-6 _____, and V-124-2 _____.

_____ 4. Close the following valves on the panelboard: HS-100-1 _____, HS-120-1 _____, HS-120-2 _____, HS-122-1 _____, HS-126-1 _____, HS-126-2 _____, HS-126-3 _____, HS-126-4 _____, HS-220-2 _____, HS-222-2 _____.

_____ 5. Open V-150-6 _____ and VP-124-3 _____ in the penthouse.

_____ 6. The following instruments should be in service and charts synchronized: LR-152 _____, PR-H-121-1 _____, FR-F-832-1 _____, FR-F-830-1 _____, PR-X-124-1 _____, FR-X-124-1 _____.

_____ 7. Set the following controllers:

Controller - TIC	Setpoint, °C	Control Point	Time Set
520-C	_____	_____	_____
521-C	_____	_____	_____
527	_____	_____	_____
520-B	_____	_____	_____
521-B	_____	_____	_____

_____ 8. Adjust the settings on the following variacs:

Variac - TC	Setting	Time Set
520-C	_____	_____
521-C	_____	_____
527	_____	_____
520-B	_____	_____
521-B	_____	_____

Turn on ES-FV-650 _____ and ES-FV-522 _____.

_____ 9. Record periodic data on sheets provided.

_____ 10. Turn on brine switches in pipe tunnel _____. Set pressure on each brine reservoir at _____psig.

_____ 11. Turn on FV-830 and FV-832 according to procedure ORS _____. Start compressors on FV-830 _____ and FV-832 _____.

Time _____.

_____ 12. Check that caustic scrubber FV-150 is in operation. (See procedure OST) _____.

_____ 13. If small product receiver FV-223 is to be used complete steps (a) through (e) at the end of procedure before continuing with step 14.

_____ 14. Set PCV-160-1B on "auto" and adjust setpoint to _____psig. Set FCV-X-120 _____ on manual.

_____ 15. Turn on F_2 supply and adjust FC-X-100/120 to _____ slm on the X-120 range. Time F_2 on _____.

_____ 16. When flows have leveled out, switch controllers to "auto."

_____ 17. Set the following controllers:

Controller - TIC	Setpoint	Control Point	Time Set
120	_____	_____	_____
121	_____	_____	_____
520A	_____	_____	_____
521A	_____	_____	_____

_____ 18. Adjust the settings on these variacs:

Variac	Setting	Time Set
TC-120	_____	_____
TC-121	_____	_____
TC-520A	_____	_____
TC-521A	_____	_____

_____ 19. Record data on sheets provided.

_____ 20. Continue operation until the following thermocouples exceed _____ °C.

Point	Time Reached _____ °C
TR-2A-1	_____
TR-2A-2	_____
TR-2A-3	_____
TR-2A-4	_____
TR-2D-2	_____
TR-2D-3	_____
TR-2D-5	_____
TR-2D-6	_____

_____ 21. When all above points reach _____ °C, shut off these controllers: TIC-120, TIC-121, TIC-520A, TIC-521A

_____ 22. Fifteen minutes after step 22, shut off F_2 flow _____. Reset FCX-100/120 and PCV-160-1B to zero output pressure _____. Time _____.

_____ 23. Set FC-LN-100-1 to _____%.

_____ 24. Set PI-LN-100-1 on 8 psig. Time _____.

_____ 25. Forty minutes after step 24, close FCV-LN-100-1.

_____ 26. Close HS-120-4 _____, HS-220-1 _____, HS-222-3 _____, HS-222-4 _____, HS-121-2 _____, HS-120-2 _____, HS-120-1 _____.

_____ 27. Sample caustic in FV-152 _____. Code SI- _____.

_____ 28. If product receiver FV-223 was used close FV-223 cylinder valves _____, V-223-1 _____, V-223-2 _____, then see procedure for product receiver handling of FV-223.

_____ 29. If product is to be transferred to FV-126 see procedure for Product Removal Operation.

PROCEDURE TO BE COMPLATED AFTER STEP 13 IF FV-223 IS USED

(a) Heat lines to FV-223 (FV-523) to 100°C _____.

(b) Open V-223-1 _____, V-223-2 _____ and valves on FV-223 _____.

(c) Close HCV-220-1 _____ and V-223-3 _____.

(d) Fill the jacket around FV-223 with a mixture of trichloroethylene and crushed dry ice _____.

(e) Allow FV-223 to cool to _____°C _____. Add dry ice as required to maintain temperature in FV-223 _____.

DISTRIBUTION

1-2. Central Research Library
3. Document Reference Section
4. M. J. Skinner
5. Franco Sneider, Comitato Nazionale per L'Energia Nucleare
Rome, Italy
6-8. DTIE