ORNL
MASTER COPY

OAK RIDGE NATIONAL LABORATORY
operated by
UNION CARBIDE CORPORATION
for the
U.S. ATOMIC ENERGY COMMISSION

ORNL - TM - 142

COPY NO. - 26

DATE - February 13, 1962

GROUND DISPOSAL OF LIQUID WASTE AT OAK RIDGE NATIONAL LABORATORY

E. J. WITKOWSKI AND J. F. MANNESCHMIDT

ABSTRACT

Radioactive liquid waste generated by the Oak Ridge National Laboratory consists of process waste and intermediate level waste. Approximately 400,000 gal/day of process waste, at relatively low activity levels, is decontaminated in a treatment plant by the addition of lime, soda ash, and clay. About 7000 gal/day of intermediate level waste, containing greater quantities of activity, is disposed of by pumping to two limestone-filled trenches from which it seeps through the soil to the nearby stream and river system. The trenches, which are filled and covered, replace a number of open pits which were taken out of service when excessive amounts of ruthenium created a radiation hazard. Continuous monitoring indicated that strontium is effectively removed by these disposal procedures; however, relatively large quantities of ruthenium reach the river. Because of this and the lack of assurance that the seepage system will permanently retain other nuclides, soil disposal of liquid waste at the Laboratory is being abandoned. It will be replaced by and evaporation procedure wherein intermediate level waste will be reduced in volume and the concentrates eventually converted to solids and disposed of in permanent containers.

This document has been approved for release to the public by:

David R. Hamrin 7/28/95
Technical Information Officer Date
ORNL Site

NOTICE

This document contains information of a preliminary nature and was prepared primarily for internal use at the Oak Ridge National Laboratory. It is subject to revision or correction and therefore does not represent a final report. The information is not to be abstracted, reprinted or otherwise given public dissemination without the approval of the ORNL patent branch, Legal and Information Control Department.

GROUND DISPOSAL OF LIQUID WASTE
at
OAK RIDGE NATIONAL LABORATORY

by

E. J. Witkowski and J. F. Manneschmidt

All the radioactive liquid waste at ORNL is separated into two classes, and each class is handled in a separate system. The first, called process waste, is produced at a rate of 400,000 gal/day and consists mainly of equipment cooling water and floor drainings contaminated with chemicals and a relatively small amount of activity. This waste is processed through a lime - soda ash - clay treatment plant where approximately 80% of the activity is removed. The effluent from the plant is released into a creek that runs through the ORNL controlled area. The creek flows into the Clinch River, which discharges into the Tennessee River. The activity released by this system to the creek currently runs between 1 and 1 1/2 curies/month; approximately half of it is Sr^{90}.

The second class, referred to as intermediate-level waste, is produced at a rate of about 7000 gal/day and contains the bulk of the activity in wastes generated by the Laboratory. This waste is collected in underground tanks and then pumped into two limestone-filled covered trenches about one mile from the Laboratory (see Fig. 1). The soil in this area is composed of clay and Conasauga shale, and the natural soil drainage is toward the creek previously mentioned.

The details of trench construction are shown in Fig. 2. The larger of the two trenches, 425 ft long, has a holdup capacity of approximately 100,000 gal in the voids in the crushed stone. Its seepage rate is expected to be at least 5000 gal/day. The exact rate has not been determined, since the trench has been in operation for only three weeks, the soil is not yet saturated, and the liquid level has not been maintained at a maximum for a sufficiently long period of time. The shorter trench, 300 ft long, has a holdup capacity of approximately 50,000 gal and a

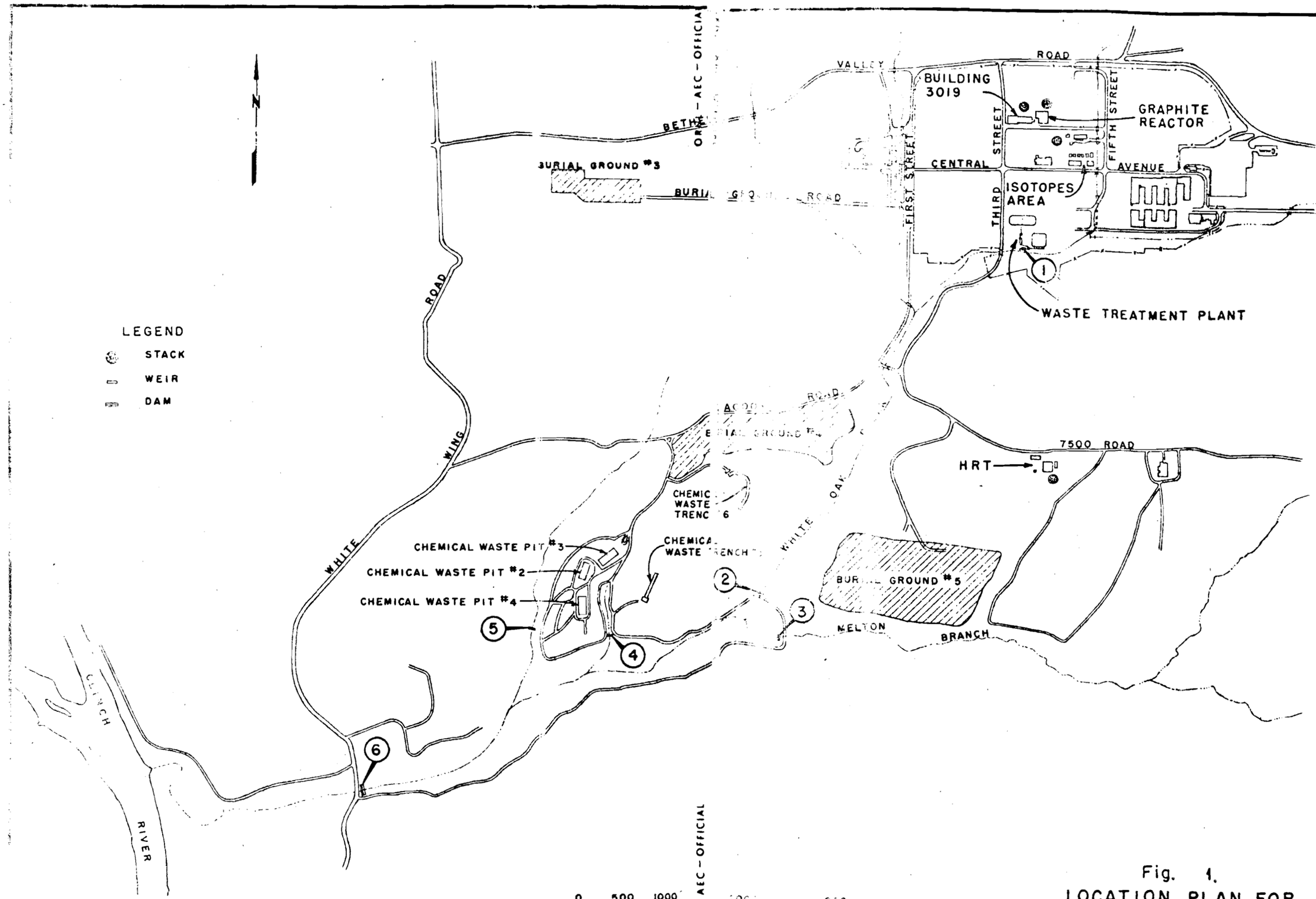

Fig. 1.
LOCATION PLAN FOR
LABORATORY WASTE MONITORING STATIONS

NOT CLASSIFIED

UNCLASSIFIED
ORNL-LR-DWG 62129

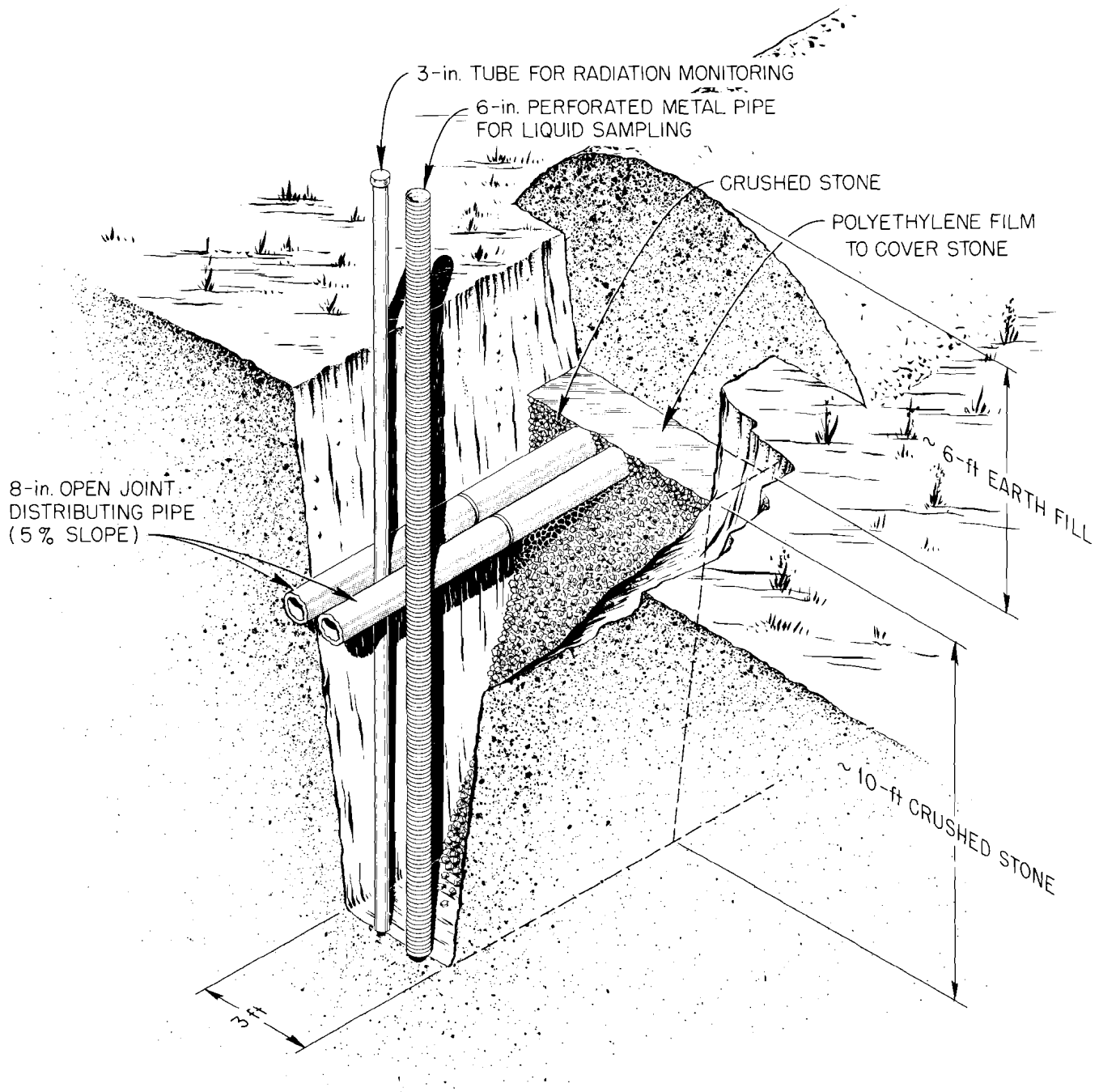

Fig. 2. Typical Waste Disposal Trench.

seepage rate of 4000 gal/day. Its construction features are similar in most respects to those of the long trench. It has been in operation since June 1960.

Before the covered trenches were constructed, soil disposal of liquid waste was carried on by using three 1,000,000-gal, 15-ft-deep, open pits (see Fig. 3) located in the same general area of the covered trenches. These open pits were used exclusively from 1951 until June 1960, when the first trench was put into operation. From June 1960 until the second trench was put into operation, the open pits were used for about half the waste. After the second trench was put into service, use of the open pits was discontinued.

All activity discharged into the creek from all Laboratory sources is monitored by continuous flow-measuring and proportional-sampling equipment at the numbered locations shown in Fig. 1. Seepage from the open pits is sampled at points 4 and 5. The seep from the first trench (trench No. 5) put into service has only been grab-sampled thus far and found to contain an insignificant amount of Ru^{106} activity. The seepage from trench No. 6 has not yet been checked, since no detectable activity can be expected at the surface until it has been in operation longer.

All the samples taken thus far from the open-pit seep streams have shown that the soil is retaining practically all the activity except Ru^{106} and a small amount of Co^{60}. Samples taken from wells near the pits confirm that Ru^{106} is the only nuclide moving in any significant quantity and that the Sr^{90} is retained in the soil near the pit with no apparent danger of it moving into the seep streams.

The open-pit waste disposal operations at the Laboratory were considered satisfactory until the latter part of 1959. The operation was

UNCLASSIFIED
PHOTO 15298A

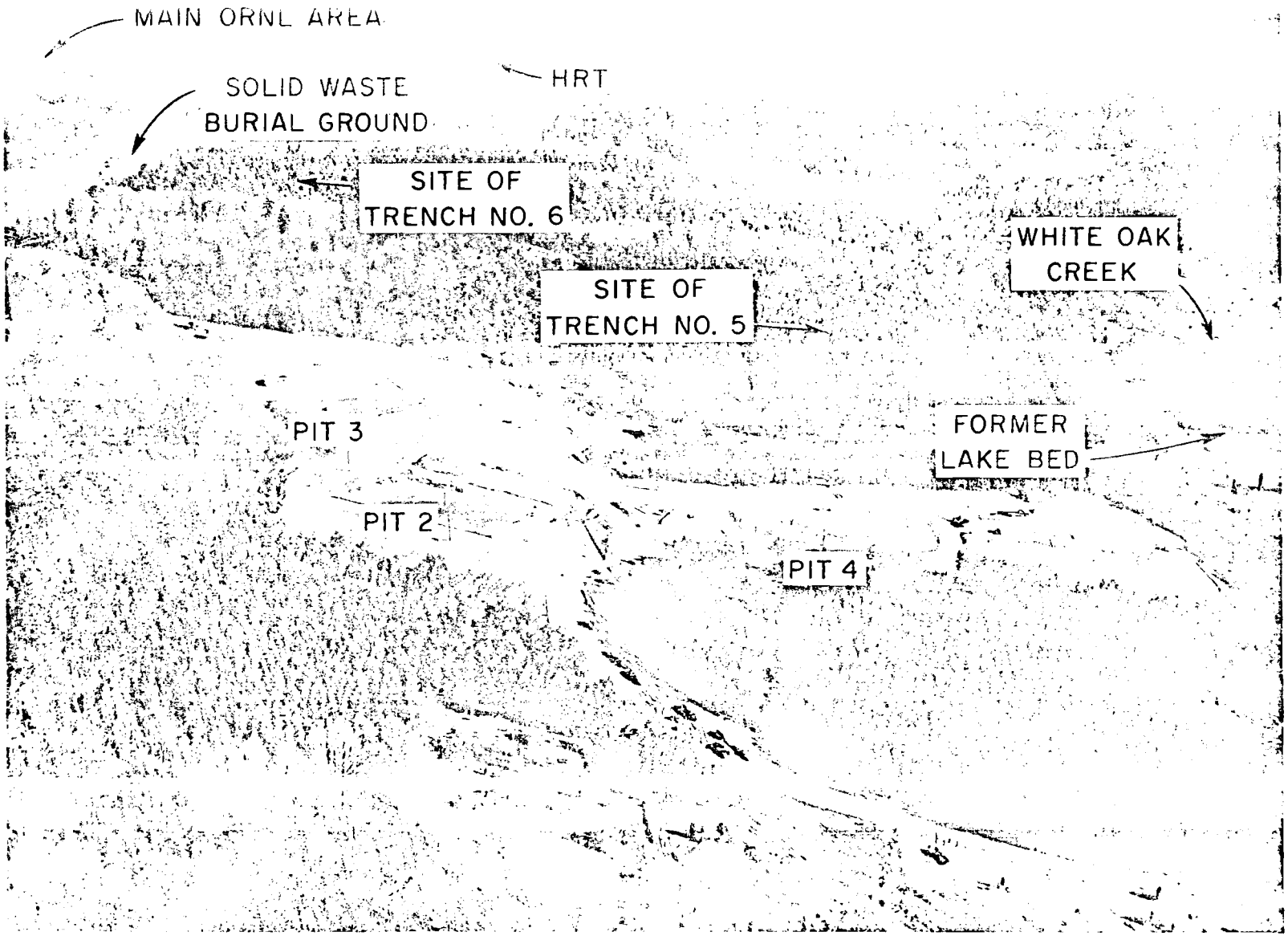

Fig. 3. ORNL Waste Disposal Area.

ORNL – AEC – OFFICIAL

very simple and appeared to offer economy as well as safety. Although Ru^{106} was being released into the Clinch River in relatively large quantities, Sr^{90} released from the process waste system and other sources (not the pits) was still the controlling contaminant in MPC_w considerations. Late in 1959 and early in 1960, however, several incidents took place which prompted a critical reappraisal of the waste-disposal practices. One of the incidents was a very high discharge of Ru^{106} to the pits in September. During this month the pits received a total of 116,000 curies, compared to an average of 850 curies per month during the previous four years. This raised the average concentration of Ru^{106} in the river by more than a factor of 50 (see Table I).

Although the increase in the ruthenium contamination of the river water did not create a real health problem to the users downstream, it became obvious that serious public-relations problems could result from these releases. This possibility was clearly brought to our attention by the AEC's Oak Ridge Gaseous Diffusion Plant, the first user of the river water downstream from the Laboratory. The Plant maintained a continuous gross-activity monitor with recorder on the water intake into the Plant. Some of the operators who had observed the increase in activity on the recorder became very concerned about their health and began to carry their own drinking water from home. It was apparent that explanations of MPC_w values failed to satisfy them completely. Their supervisors and health physicists, for the reasons just stated and possibly because of their own fears, exerted pressure to try to reduce the releases from the Laboratory.

At this time also, there began to be doubts about the ability of

Table I - Ru^{106} Activity Released From Open Pits to White Oak Creek and Clinch River

Year	Total Activity to Pits, Curies	Ru^{106} to Pits, Curies	Ru^{106} Seeped to Creek, Curies	Ru^{106} Average Concentration in River, $\mu c/ml$	Ru^{106} Maximum Concentration in River $\mu c/ml$
1956	35,000	5,600	Not available	1.1×10^{-8}	3.2×10^{-8}
1957	42,000	4,500	200	1.8×10^{-8}	3.4×10^{-8}
1958	53,000	2,800	160	1.4×10^{-8}	6.3×10^{-8}
1959	280,000	197,400	1,320	5.9×10^{-8}	2.3×10^{-7}
1960	21,000	14,200	3,935	2.8×10^{-7}	8.1×10^{-7}
1961 through July	4,000	290	4,940	9.0×10^{-7}	2.0×10^{-6}

the soil to retain permanently the other radionuclides, mainly Sr^{90}. By the end of 1959, a total of 37,000 curies of Sr^{90} had been placed in the open pits. All samples taken from seep streams and wells located near the pits gave no evidence of any significant movement of strontium activity. However, there appeared to be no way to account for the location of every portion of the activity and to predict with certainity its future behavior.

Another condition which began to appear very unsatisfactory during the critical reappraisal of the open-pit operation was the high radiation background in the vicinity of the pits. Although the exposure of personnel during normal operations had been only a minor problem, it became serious after the high release of ruthenium, when an attempt was made to set up an extensive sampling procedure in the pit area. A Proposal to drill sample wells adjacent to the pits could not be considered because the background in that area was as high as 1500 mr/hr.

The two covered trenches were put into operation only as a temporary substitute for the open pits. Since they are covered, the problem of a high radiation background is eliminated. They have been placed in an area where seepage to the surface is expected to take a much longer time, so that the Ru^{106} will be considerably reduced by decay before it is released.

To further reduce the ruthenium seepage problem, the trenches are no longer used for disposal of highly concentrated Ru^{106} wastes. These are separated and permanently stored in tanks. As a long-range permanent solution, it is planned that intermediate-level waste will be evaporated and then eventually concentrated to a solid form, possibly by

calcination, for storage in permanent containers. The evaporator is now being designed and is expected to be in operation late in 1963. The final concentration stage is scheduled to be in operation before the existing storage tanks are filled with evaporator concentrate.

In summary, after ten years of shallow ground disposal of liquid wastes at ORNL, confidence in the long-term safety of the operation has been shaken. All the tests that have been made thus far have not satisfactorily ruled out the very remote long-range possibility of serious Clinch River contamination. This fact, plus the public-relations problems that could be created by continued releases of Ru^{106}, even though these releases may be below tolerance levels, could have a detrimental effect on the long-term operation of the Laboratory. The Laboratory management has therefore concluded that it would serve the best interests of both the public and the Laboratory to discontinue its liquid-waste ground disposal operation.

Distribution

1-5. J. F. Manneschmidt
6-20. DTIE, ORO
21-22. Central Research Library
23. Document Reference Section
24-25. Laboratory Records
26. Laboratory Records - RC
27. Research and Development Div. ORO