OAK RIDGE NATIONAL LABORATORY
THERMONUCLEAR DIVISION LIBRARY
U. S. PROPERTY

~~OFFICIAL USE ONLY~~

ORNL-3044
C-44a - Nuclear Technology - Materials
M-3679 (24th ed.)

For Reference

Not to be taken from this room

THERMONUCLEAR PROJECT

SEMIANNUAL PROGRESS REPORT

FOR PERIOD ENDING JULY 31, 1960

CHAPTER 3

ORNL LIBRARIES

NONLOAN COPY

This copy may **not** be taken from the library. It has been placed here for the benefit of frequent library users who depend on finding certain books always in the library.

A duplicate copy which may be borrowed is available in the library. If not on the shelves, inquire at the circulation desk for the duplicate copy.

OAK RIDGE NATIONAL LABORATORY
operated by
UNION CARBIDE CORPORATION
for the
U.S. ATOMIC ENERGY COMMISSION

~~OFFICIAL USE ONLY~~

LEGAL NOTICE

This report was prepared as an account of Government sponsored work. Neither the United States, nor the Commission, nor any person acting on behalf of the Commission:

A. Makes any warranty or representation, expressed or implied, with respect to the accuracy, completeness, or usefulness of the information contained in this report, or that the use of any information, apparatus, method, or process disclosed in this report may not infringe privately owned rights; or

B. Assumes any liabilities with respect to the use of, or for damages resulting from the use of any information, apparatus, method, or process disclosed in this report.

As used in the above, "person acting on behalf of the Commission" includes any employee or contractor of the Commission, or employee of such contractor, to the extent that such employee or contractor of the Commission, or employee of such contractor prepares, disseminates, or provides access to, any information pursuant to his employment or contract with the Commission, or his employment with such contractor.

~~OFFICIAL USE ONLY~~

ORNL-3044

Contract No. W-7405-eng-26

THERMONUCLEAR PROJECT SEMIANNUAL PROGRESS REPORT

FOR PERIOD ENDING JULY 31, 1960, CHAPTER 3

Classification changed to
Declassified by authority of
E. J. Murphy 4-10-61
By R. L. Knight 4-26-61

DATE ISSUED

DEC 27 1960

OAK RIDGE NATIONAL LABORATORY
Oak Ridge, Tennessee
operated by
UNION CARBIDE CORPORATION
for the
U.S. ATOMIC ENERGY COMMISSION

~~OFFICIAL USE ONLY~~

PREFACE

This document consists of material which normally would be the third chapter of the Thermonuclear Project Semiannual Report for Period Ending July 31, 1960 (issued as ORNL-3011). However, since a portion of the work covered by this chapter is in the Official Use Only category it was felt that it would be more desirable to issue the entire chapter as a separate report with restricted access rather than to delete portions, which might impair the reader's understanding of the status of the DCX-EP-B work.

ABSTRACTING SUMMARY

3. DCX-EP-B DESIGN AND SUPPORTING WORK

DCX-EP-B is a multiple-pass molecular dissociation apparatus now in course of construction using largely vacuum equipment that is on hand. A general description of the design parameters is given, and a discussion is presented of experimental work on the reduction of space-charge accumulation by the ultraviolet radiation from a vacuum arc in the tank. The planned procedure is to inject molecular ions at 600 kev in a neutralized beam, with or without the presence of a dissociative arc.

CONTENTS

PREFACE iii

ABSTRACTING SUMMARY v

3. DCX-EP-B DESIGN AND SUPPORTING WORK 1

3.1 Introduction 1

3.2 General Description 2

3.3 Vacuum System 4

3.4 Experiments Relating to the Effect of Electric Fields in the Plasma 5

3.5 Neutralized Beam Injector 9

3.5.1 Principles 9

3.5.2 Electron Gun 10

3.5.3 Ion Source 12

3.6 Possibility of Simultaneous Injection of H_2^+, H_3^+, and Other Ions 16

3.7 "Polarized" Plasma Beam Injector 17

3.8 Deep Trapping and Adiabatic Containment 20

3. DCX-EP-B DESIGN AND SUPPORTING WORK

J. S. Luce
W. L. Stirling
O. D. Matlock
C. W. Blue
H. C. Hoy
R. L. Knight
V. J. Meece
O. Sharp
D. J. Rose[1]
H. S. Snyder[2]
C. H. Weaver[3]

3.1 INTRODUCTION

The availability of numerous surplus items accumulated from the Electromagnetic Plant at Y-12 and the Controlled Fusion Exhibit at Geneva has made possible the construction of an advanced DCX machine at only a fraction of normal costs. The accelerator tube, which provides for space-charge neutralization throughout its length, is being designed through the cooperative efforts of the Exploratory Physics Group and members of the ORNL High Voltage Laboratory. The "Polarized" Plasma Beam Source is being designed by the Exploratory Physics Group. The magnetic coils and shielded injection tube are being engineered in conjunction with the similar parts required for DCX-2, and since this work is being reviewed elsewhere[4] it will not be repeated in this report. It is worth noting, however, that a successfully collimated, neutralized molecular ion beam anticipated in DCX-EP-B would permit an injection tube of small diameter to be used. Since this tube represents the major, if not critical, obstruction in the magnetic field every possible reduction in its size is mandatory. The importance of complete and continued neutralization of the molecular ion beam can therefore hardly be overstressed. Advantage has been taken of independent investigations on plasma buildup in multiple-pass injection experiments after the arc is turned off or when no arc is used

---

[1]Consultant, MIT.
[2]Consultant, BNL.
[3]Consultant, Alabama Polytechnic Institute.
[4]See ORNL-3011, chap. 8.

at all.[5-8] The assumptions made in these studies probably are modified by experiments which show the existence of fluctuating electric fields in the plasma that probably will cause severe divergence of the ion beam when the arc is turned off. A major part of the EP experimental program is at present aimed toward reducing electric fields in the plasma without causing untenable losses in the trapped atomic ions. Encouraging progress has been made in reducing these fields by the use of radiation from a carbon arc.

This report will describe the status of various components of DCX-EP-B and certain key experiments which have influenced its design. Successful operation of the completed device will provide new methods of studying high-energy molecular ion injection and dissociative trapping.

3.2 GENERAL DESCRIPTION

The DCX-EP-B (abbreviated EPB) is a steady-state, magnetic mirror, high-energy ion storage device. The mirror coils have an inner diameter of 14 in. and are located 104 in. between centers and provide a steady-state magnetic field of 42,000 gauss. Four center coils are included which have a 48-in. outer diameter and 40-in. inner diameter. They furnish a uniform magnetic field of 12,000 gauss for a length of about 50 in. The outside auxiliary coils are provided for operation of long arcs so that good baffling and pumping can be achieved in the dual vacuum system. They have an inside diameter of approximately 40 in. and produce a magnetic field of 10,000 gauss. Figure 3.1 shows the general arrangement of major

---

[5]R. F. Post, p 146 in Conference on Controlled Thermonuclear Reactions, Held at Princeton University, October 17-20, 1955, TID-7503 (February 1956).

[6]I. N. Golovin and P. M. Morozov, private communication, Second International Conference on Peaceful Uses of Atomic Energy, Geneva, Switzerland, Sept. 1-13, 1958.

[7]A. Simon, The Possibility of an Arc Turnoff-Plasma Buildup Device, ORNL CF-59-11-89 (Nov. 20, 1959).

[8]R. E. Hester, F. C. Gilbert, and W. Heckrotte, AEC Meeting on High Energy Injection, called by A. E. Ruark, Washington, D.C., June 22 and 23, 1959 (no published report).

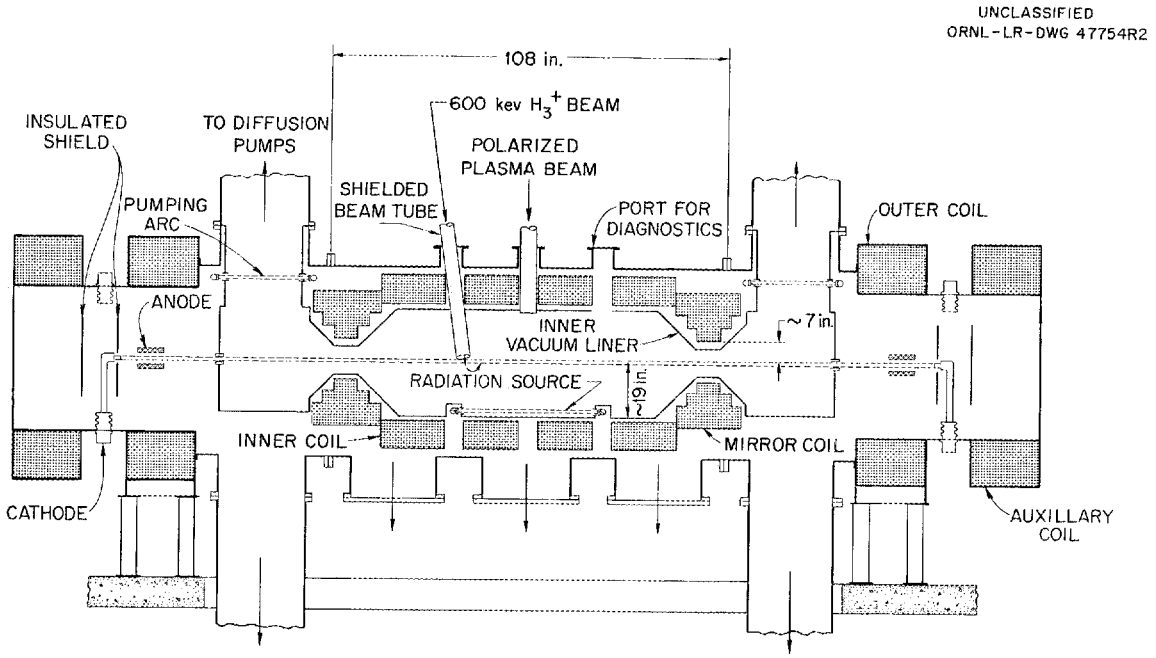

Fig. 3.1. DCX-EP-B General Arrangement.

components in the main body of the machine, which has the following physical characteristics:

Over-all length	21 ft
Over-all inside width	52 in.
Distance between mirror coil centers	104 in.
Central magnetic field	12,000 gauss
Mirror ratio	3.5
Inside diameter of liner	38 in.
Path length of 600-kev H_3^+ beam	20 m (without radial precession)
Trapped proton energy (neutralized beam)	300 kev
Trapped proton energy (polarized beam)	10–30 kev
Diffusion pumps, 20 in.	8
Power required	10 Mw

Of the eight 20-in. diffusion pumps provided for EPB, four are attached to the inner vacuum system and four to the outer, and more pumps can be used if desired. The manifolds, pumps, vacuum valves, and the main box have been completed and are ready for installation.

Mounted above this structure will be the 600-kev molecular ion injection system. There is a 600-kv, 1-amp power supply available for the injector which will be shared with other facilities. Several surplus power supplies have been secured to furnish power for the electron source, the ion source, and the beam-guiding magnets. A 40-kv, 1.2-amp d-c surplus "cubicle" has been mounted on insulators and put in series with an available 100-kv, 3-amp d-c supply. This combined supply with its auxiliary units was built to power the "polarized" plasma injector. Also a surplus d-c supply rated at 40 kv and 2 amp has been reworked to supply power for electron extraction from an axial hydrogen arc. These electrons are needed for "burnout" and dissociation experiments.

The arc supply itself is a surplus phase shifter which has been reconnected to form a rectifier transformer whose maximum output is 200 amp at 4.5 kv. This excellent supply will allow operation of the reflux arcs and electron guns at much higher energy than has previously been possible. A 3.5-Mw arc supply has been purchased for use with arc-wall experiments. While it is planned to do most of these experiments in DCX-EP-A, some of them may be done in EPB. Due to a shortage of motor generators, this supply must also be used to power the two outside coils on EPB. Strict scheduling will be necessary so that this supply can be used for all its various functions. Provision will be made to allow arc-wall and similar experiments in EPB to be done at night or on weekends. During these experiments motor generators normally used for other work will replace the arc supply on the outside coils of EPB.

The following sections describe the status of various phases of EPB construction and engineering.

3.3 VACUUM SYSTEM

The assumption is often made that "plasma pumping" can be relied upon to remove residual gas from the inner reacting volume of machines of the DCX type. Plasma pumping in this case refers to the directed flow of the low-energy ions through the mirrors along lines of magnetic flux. These low-energy ions are formed when the trapped high-energy ions make collisions with the residual gas in the volume. The outward flow has been calculated to be as much as 10^6 liters/sec. EPB has been designed to take

advantage of plasma pumping, and if it should actually prove to be adequate no other pumping system will be used.

It is almost certain, however, that pumping of this kind will not be dependable until plasma instabilities can be overcome. If for any reason the plasma motion is modified to the extent that some appreciable fraction strikes the injector tube or other inside surfaces, a large amount of gas will be produced and additional pumping must be provided if charge-exchange losses are to be maintained at a tenable value. Tests of pumping by intense electron streams in which the negative space charge of the electrons "traps" low-energy ions are in progress and appear to offer excellent possibilities. These electrons may also reduce plasma instabilities and serve as breakup centers for high-energy molecular ions as well. An auxiliary arc (or arcs) will be used in EPB to provide radiation for plasma stability and is also arranged to act as a vacuum pump. Conventional gettering pumping is provided in the inner reacting volume, and two 20-in. diffusion pumps are attached at each end of the liner.

The outer vacuum system in EPB presents no unusual problems, and conventional oil diffusion pumps will be used in addition to several "arc pumps." These arc pumps also assist in pumping out the sections of the inner vacuum system which lie outside the coils (Fig. 3.1).

3.4 EXPERIMENTS RELATING TO THE EFFECT OF ELECTRIC FIELDS IN THE PLASMA

Recent observations (ORNL-3011, Sec 1.3) suggest that if one starts with an arc, it will be necessary that eventually the arc be turned off, since it represents a serious energy loss mechanism. It was, of course, of paramount importance in the design of EPB to know the stabilizing effect of the arc in machines of the DCX type and the behavior of the trapped particles <u>after</u> the arc is gone. A series of experiments has been conducted, using the device shown in Fig. 3.2, in an effort to understand this situation. While the experiments are still in a preliminary state, the data which have been taken indicate that beam "blowup" occurs when the arc is off and that electric fields develop in the plasma through which the beam passes. Neutralization of the ion beam by the plasma[9] appears to be

[9]This plasma results from ionization of residual neutrals by the ion beam.

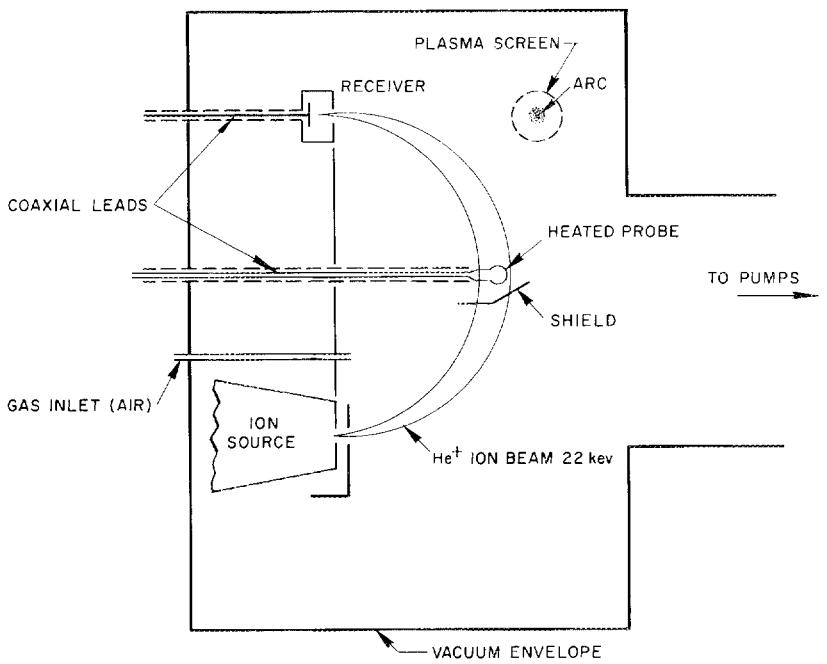

Fig. 3.2. Apparatus for Space-Potential Study.

effective only when the density of neutrals exceeds the ion density in the beam by a factor of approximately 10^4 – obviously an untenable situation in a thermonuclear device. These data indicate that burnout with a trapped beam is impossible until some method of reducing electric fields in the plasma has been perfected. The beam loss in the Russian OGRA device reported by Spitzer may be due to the presence of similar electric fields in the OGRA plasma.[10] It should be mentioned that the measurements described were made with a beam which passes through 180° only. It is difficult to predict the consequence of ions making many thousands of revolutions through the plasma except that cooperative phenomena should be enhanced. Figure 3.3 shows typical data on the d-c plasma potential as a function of the neutral/ion ratio. Figure 3.4 shows typical data on oscillatory fields in the plasma as a function of the neutral/ion ratio.

[10] L. Spitzer, Jr., Thermonuclear Research in Moscow and Leningrad, Project Matterhorn Technical Memo No. 89 (November or December 1959).

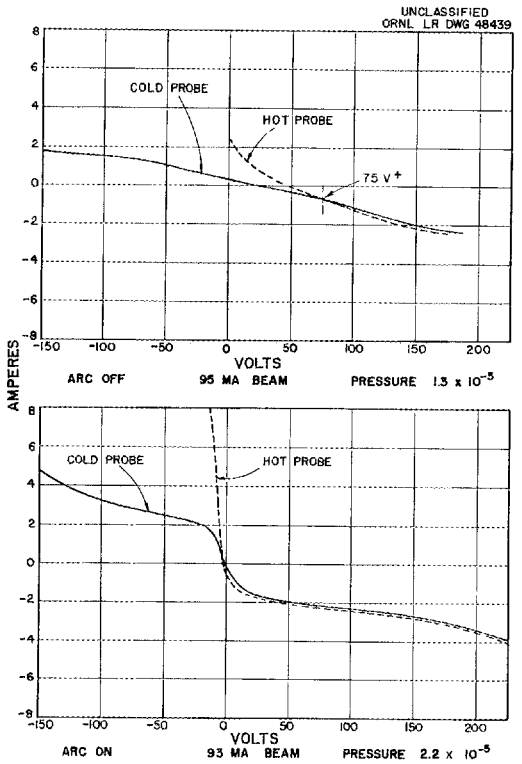

Fig. 3.3. D-C Plasma Potential.

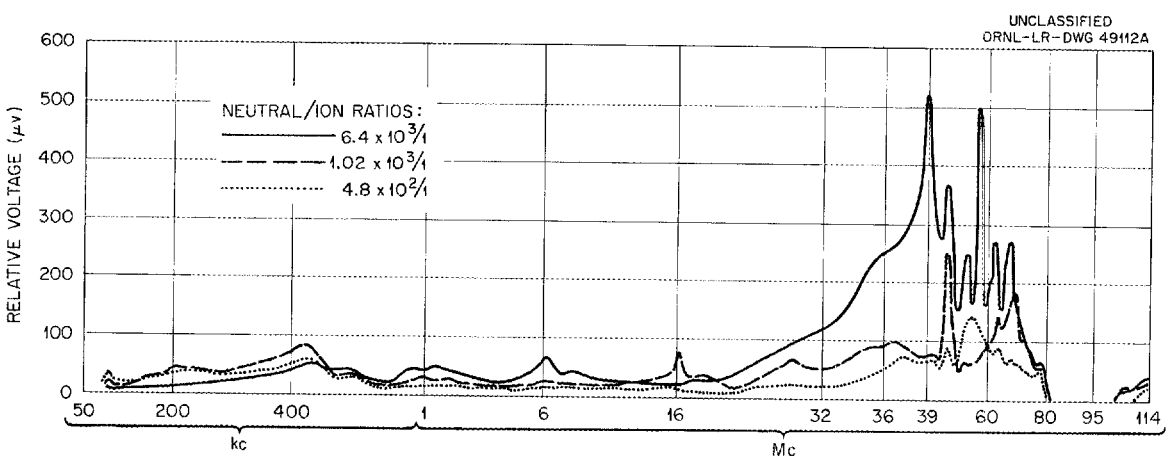

Fig. 3.4. Oscillatory Fields as a Function of Neutral/Ion Ratio.

Other experiments in which an arc was used for neutralization were conducted concurrently with the gas neutralization studies. A carbon arc of the type developed for DCX was used in these experiments. As expected it was found that the arc completely neutralized the beam blowup[11] and no

[11]An older, similar observation has been reported by S. C. Curran, MDDC-1476 (Apr. 25, 1945).

d-c plasma potential could be observed. It was also found that oscillatory electric fields in the plasma were modified. Figure 3.5 shows the effect of the arc on plasma oscillations.

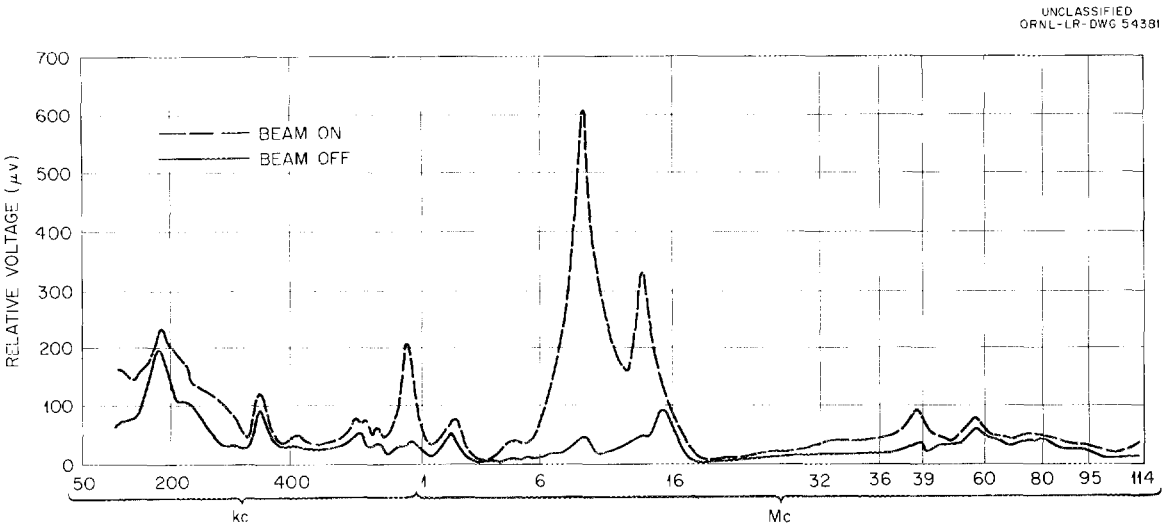

Fig. 3.5. Effect of Arc on Plasma Oscillations.

Perhaps the most important observation made in these experiments was that neutralization of the space potential and modification of the plasma oscillation when a carbon arc is used are apparently due to radiation from the arc and are not associated with charged particles from the arc in any direct way. In these experiments the arc was moved 4 in. away from the outer edge of the beam. To be sure that no plasma could diffuse to the beam a cylindrical screen was placed around the arc. The screen was insulated and a negative potential of 300 v was applied so that no plasma could reach the beam, but most of the radiation could pass through since the screen was 75% open. With this arrangement it was found that the data shown in Figs. 3.4 and 3.5 were reproduced. Since no plasma from the arc could reach the beam the conclusion was reached that the effect of neutralization is due to radiation.

These experiments have led to the incorporation of an auxiliary arc or arcs into the design of EPB, placed well away from the trapped plasma region, but arranged so that radiation from the arc can pass through the plasma. The arcs will also serve as vacuum pumps.

A complete report will be written on the measurements described above when the work is finished.

3.5 NEUTRALIZED BEAM INJECTOR

3.5.1 Principles

A 600-kev beam of H_2^+ or H_3^+ ions with a density of $10^9/cm^3$ to $10^{10}/cm^3$ is needed for experiments in EPB. Ion beams of this density must be neutralized by electrons, or the electrostatic force resulting from space charge will "blow up" the beam. In conventional d-c accelerators complete neutralization is not achieved and the injection system must be designed throughout with space-charge forces in mind. (See also Sec 5.1.3 for a separate discussion of this requirement.) The stringent conditions imposed by the additional requirement that the molecular ion beam make many revolutions through the dissociative medium has led to the conclusion that the chances of success are greatly enhanced if the injected beam is neutralized at all times so that space-charge forces cannot develop. The condition of complete space-charge neutrality does not imply the absence of an applied electric field which can accelerate positive ions. One can propose a class of electron velocity distributions in a voltage gap in which positive ions are accelerated, electrons are decelerated and reflected, and no space-charge effects arise anywhere.[12] Consider the diagram (Fig. 3.6) with the acceleration of a positive ion beam coming from

[12]D. J. Rose, Acceleration of a Neutralized Ion Beam, MIT Quarterly Progress Report No. 53, p 3 (Apr. 15, 1959).

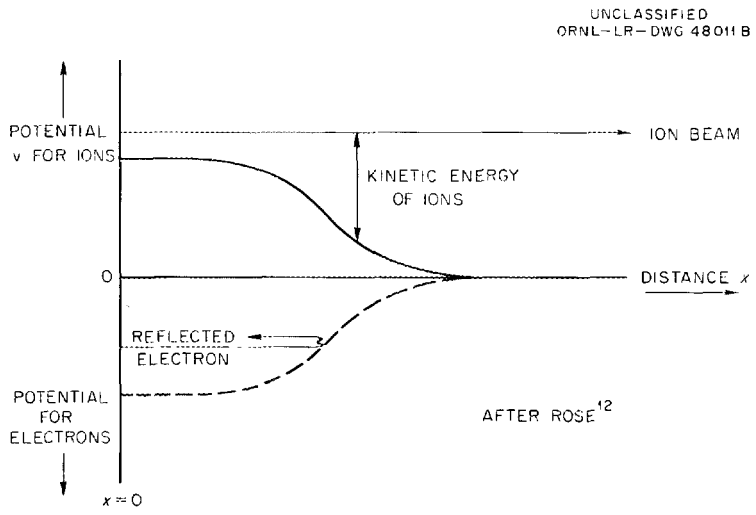

Fig. 3.6. Potential Diagram for Ions and Electrons.

the left. At the left the ion density is high and the velocity is low. At the right the ions have high velocity and low density. If electrons are injected into the gap, the accelerating field for positive ions decelerates the negative electrons, as shown by the dotted mirror image of the ion potential. Thus electrons with suitable velocity distributions will be decelerated and reflected throughout the ion accelerating region and charge neutrality can be achieved through the gap. It is worth noting that this phenomenon has been observed in low-energy (500 v) PIG-type sources operated at the Massachusetts Institute of Technology. Achieving these conditions in an accelerator operating at 600 kv does, of course, require new concepts and technological developments which are now well under way.

In addition to the oscillatory electrons needed in the accelerating region it is also necessary to accelerate a stream of electrons (see Sec 3.5.2) through the entire system that emerge with about the same velocity as the positive ions; for example, for 600-kv H_2^+ ions, 162-v electrons will be required. Experiments aimed at injecting these electrons after ion acceleration have proved less than satisfactory. In the accelerator to be described the electrons are accelerated through the entire system and pass out with the positive ions at the end of the injector. A double-ended accelerator results with the 600-kv ion source centered between two zero-potential planes with graded potentials between.

3.5.2 Electron Gun

To provide electrons for neutralization after the ions leave the accelerator, it is necessary to furnish a continuous stream of nondivergent electrons with a density the same as that of the positive ions (at least 5×10^{10} electrons/cm^3). Obviously these requirements cannot be met by a conventional electron gun. Indeed, space-charge forces play havoc in the electron accelerating gap as well as in the ion gap. To overcome electron space charge an arc is struck between a filament and a hollow anode. Negative space-charge forces are neutralized at the filament by the presence of positive ions from the arc, and electrons are accelerated through the arc. A large positive field is applied to the system, which

reflects the ions back but accelerates the electrons. Figure 3.7 shows a 3/16-in.-dia hole burned through a piece of carbon by a nondivergent beam of electrons with a density of 5×10^{10} electrons/cm^3. Figures 3.8 and 3.9 show the apparatus used for these tests. Achievement of these intense beams of nondivergent electrons is a major step toward achieving ion beams of the quality and density needed in EPB. An improvement in this system has been made by providing ions with the proper velocity distribution throughout the accelerating region for electrons, rather than just at the filament. This is desirable in order to completely neutralize negative electron space charge, just as electrons of the proper velocity distribution are desirable in the ion acceleration system to neutralize positive ion space charge. The density of nondivergent electrons which has been achieved appears to be adequate for injection into EPB.

UNCLASSIFIED
PHOTO 35755

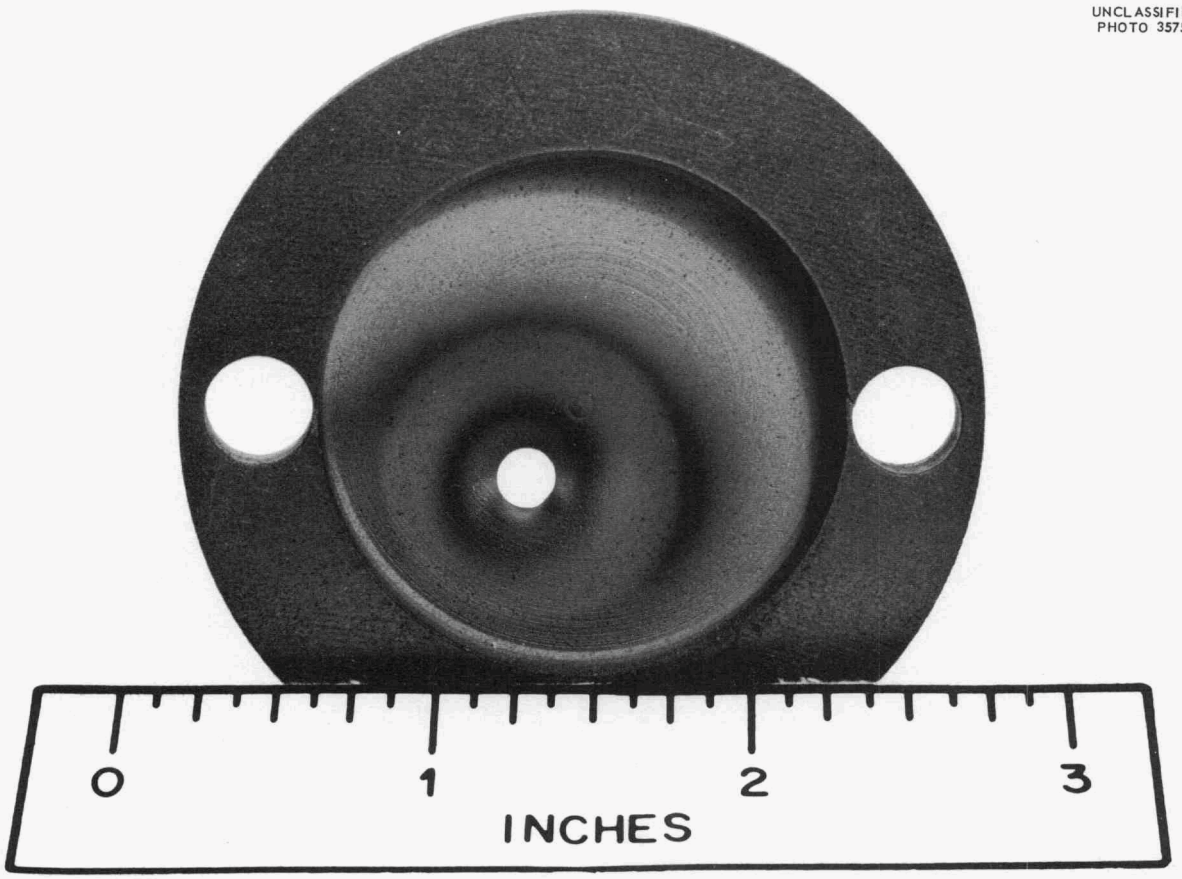

Fig. 3.7. Hole (3/16-in.-dia) Burned by a Nondiverging Beam of Electrons with a Density of 5×10^{10}/cm^3.

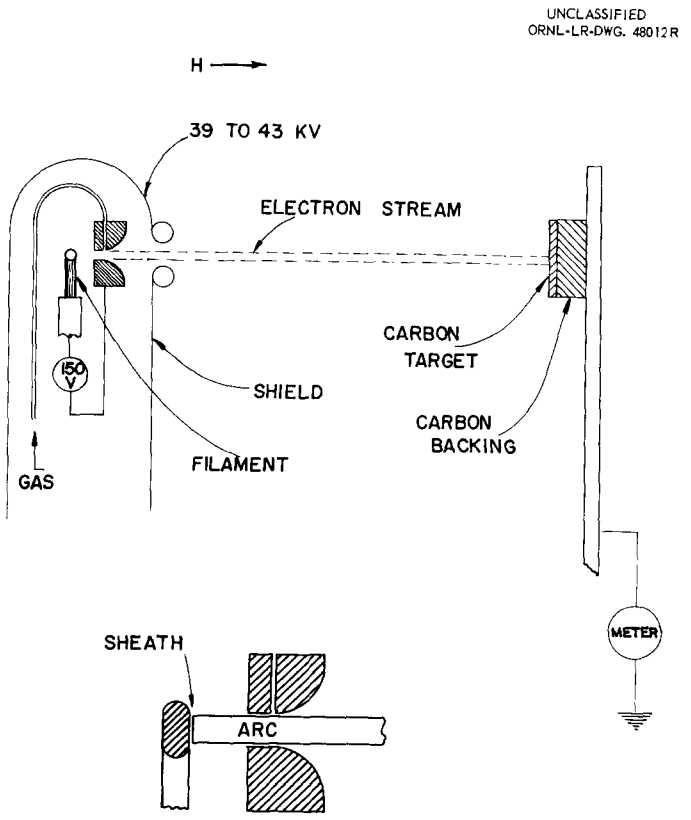

Fig. 3.8. Electron Gun – Test Model.

An axial magnetic field of 6000 gauss is provided in the accelerator to guide the electron and ion beams. The gaps provide converging magnetic and electrostatic focusing for both electrons and ions.

3.5.3 Ion Source

The ion source is of the reflux type and uses a hollow, tungsten cathode and a hollow anode. These hollow electrodes will allow the high-energy and oscillatory electrons to pass through the source as long as they remain on the axis of the system. Tests with a source of this type have demonstrated that ion beams of the required density can be extracted. Figures 3.10 and 3.11 show details of the source. A small central core on the axis of the accelerator tube (about 0.200 in. in diameter by the full length of the accelerator) is actually an oscillating region for electrons, meeting the Rose criteria of proper electron velocity distribution since electrons are created at the various potentials through the

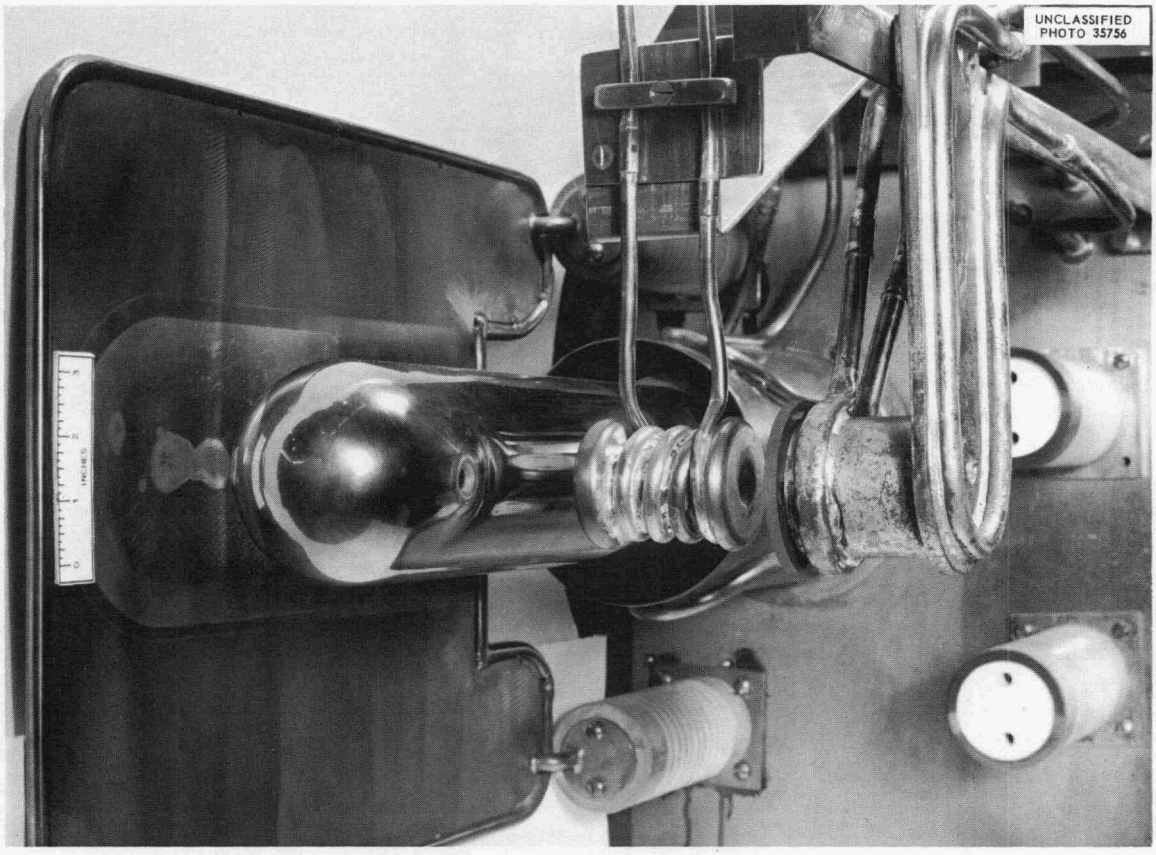

Fig. 3.9. Electron Gun.

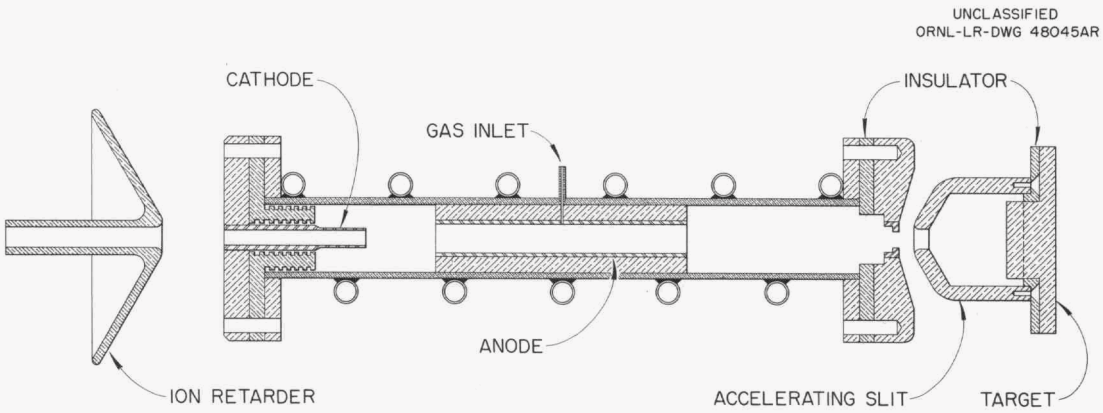

Fig. 3.10. Hollow Electrode Ion Source Test Model.

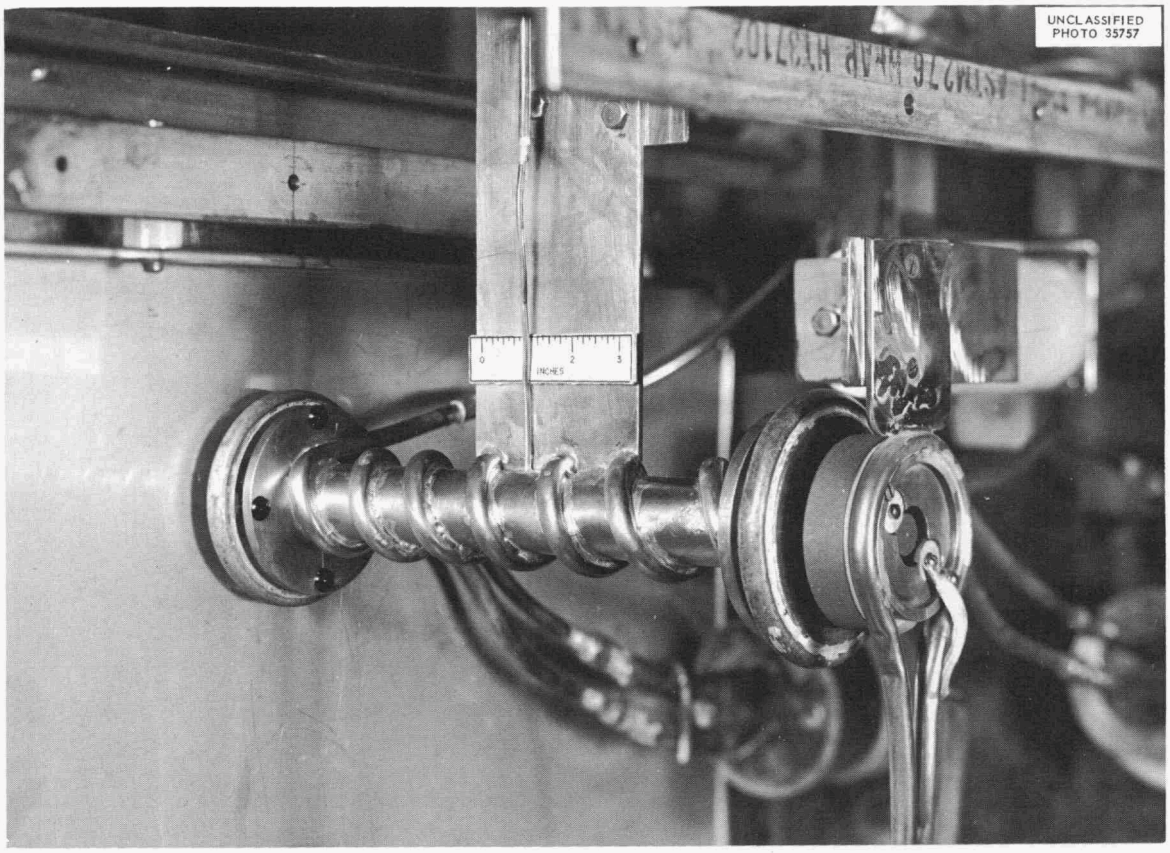

Fig. 3.11. Hollow Electrode Ion Source.

tube. It is planned to control the electron density by attention to electron-producing surfaces and neutral pressure in the accelerating tube.

Figure 3.12 shows the design of the neutralized beam injector. Mounted at the top is the electron gun with its associated equipment including two diffusion pumps. The electron beam is accelerated along the axis of the system and is guided by an axial magnetic field. The electrons proceed through an ion reflector, which is provided to prevent ions streaming back toward the electron gun. If ions were allowed to "back stream" an arc would be formed and the system would short out. The electrons next pass through the hollow source electrodes and the ion accelerating gap. Throughout the lower section of the tube electrons are decelerated while ions are accelerated, both being focused. At the bottom of the tube equal numbers of ions and electrons pass through a drift space traveling at the same velocity before entering the shielded injection tube in EPB.

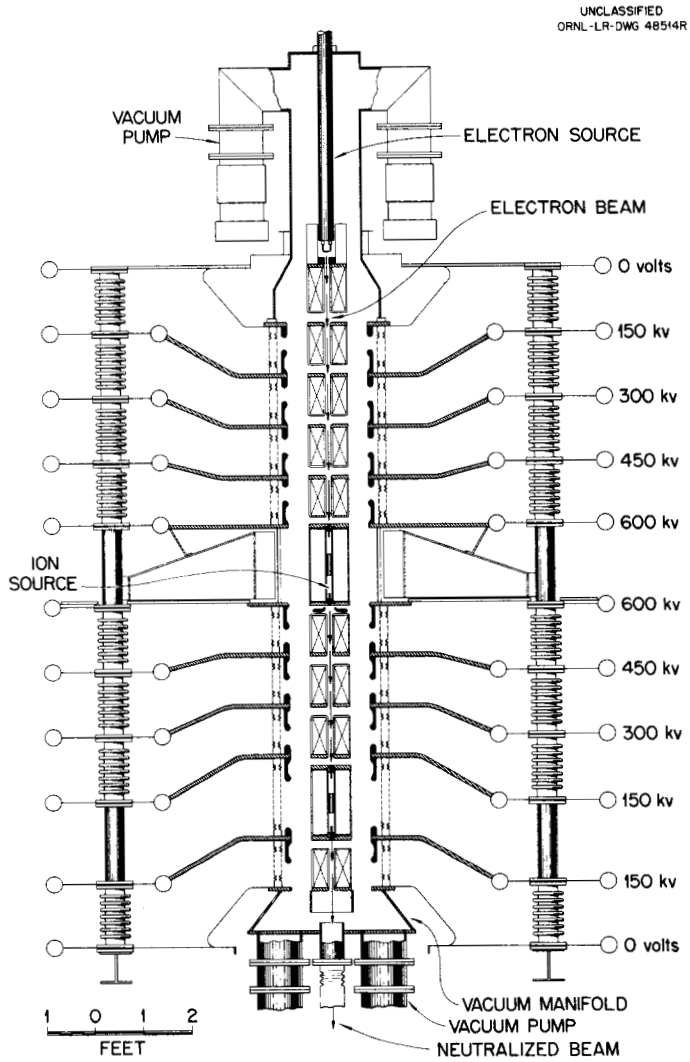

Fig. 3.12. DCX-EP-B Neutralized Beam Injector.

From the foregoing it may seem that the neutralized beam injector is a complicated device. However, if it is compared to a more conventional d-c accelerator which must always compensate for space charge forces by the use of rather elaborate electrostatic and/or magnetic lens systems, it is actually a simpler system. Successful operation of the completed injector will represent a significant improvement in d-c accelerator design. Experiments with the electron gun and the ion source have greatly increased confidence in the ability of this injector to provide an intense nondivergent beam in EPB, and it will also be feasible to convert the tube

to a more conventional design using perhaps the von Ardenne system, if in the future this method is needed for other experiments.

3.6 POSSIBILITY OF SIMULTANEOUS INJECTION OF H_2^+, H_3^+, AND OTHER IONS

If the ion beam in the 600-kv accelerator tube is space-charge neutralized, then it is possible to inject and dissociate two and perhaps more molecular ion species simultaneously. In conventional focusing, ions of different mass would, of course, have different focal lengths and come to a focus at different places. In the neutralized beam injector this problem does not arise because the beam is parallel throughout the tube length. Since both diatomic and triatomic ions are produced in the ion source their simultaneous injection would be advantageous. This can be accomplished as illustrated in Fig. 3.13.

Obviously other interesting combinations could be attained, particularly when a mixture of tritium and deuterium gas is fed to the ion source.[13]

---

[13]A. E. Ruark, Role of Moving Ions and Electrons as Targets in the Ignition of Thermonuclear Devices (July 24, 1956) (unpublished).

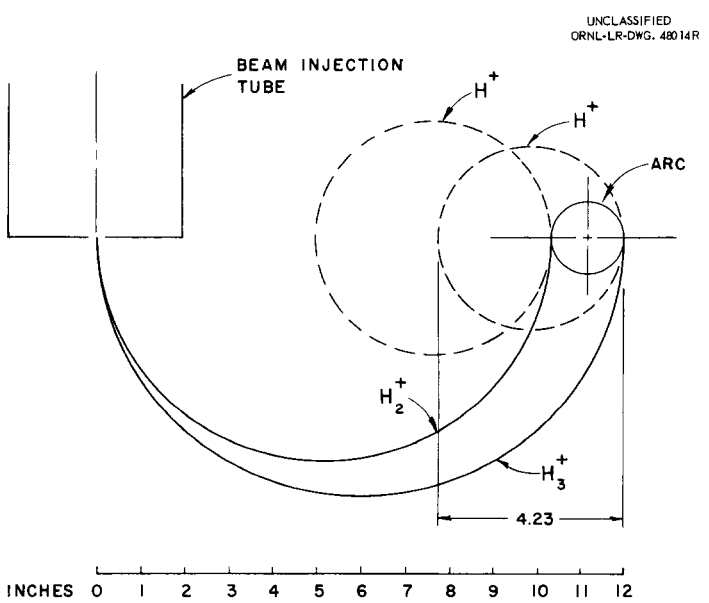

Fig. 3.13. Simultaneous Injection of H_2^+ and H_3^+.

3.7 "POLARIZED" PLASMA BEAM INJECTOR

Several investigators have shown that a stream composed of approximately equal numbers of ions and electrons of about the same velocity can be made to cross magnetic flux lines if the density is high enough.[14,15] When the plasma enters the magnetic field the $V \times B$ force acts on the ions and electrons, bending them in opposite directions. The result of this charge separation is the development of an electrostatic field which grows in magnitude until it equals and cancels the force of the magnetic field. When the two forces are equal the plasma moves in a more or less straight path unrestrained by the magnetic field.

It is proposed that advantage be taken of this phenomenon to move a high-energy plasma stream into the central plasma region of EPB.[16] When the polarized stream enters the plasma region the electric field which carried it in is modified so that the plasma is slowed down and the ions orbit many times in the plasma region. Recent low-energy experiments conducted by a group under R. F. Post confirm the slowing down of a polarized stream when it enters plasma. It is, of course, axiomatic that any charged particle injected into a static magnetic field will eventually come back out unless its orbit is changed while it is within the magnetic field. In the case just described collisions will occur when the polarized beam enters the plasma so that the orbits will be changed. To ensure absolute trapping the polarized beam will be composed of molecular hydrogen ions so that collisions will produce dissociation to the atomic state.

It is also necessary to determine whether injection of this kind is possible with 100-kev H_2^+ and H_3^+ ions since this appears to be a reasonable energy choice to "feed" molecular ions into a previously created hot plasma in a static mirror machine. Consider then a stream of ions and electrons moving into and crossing lines of magnetic flux with a velocity

---

[14] W. H. Bostick, Phys. Rev. 104, 292 (1956).

[15] R. G. Meyerand, Jr., The Interaction of a Plasma Beam with a Magnetic Field, MIT Quarterly Progress Report No. 51, p 12 (Oct. 15, 1958).

[16] J. S. Luce, Trapping of Energetic Ions by Neutralization of a Polarized Beam, ORNL CF-59-3-70 (Mar. 17, 1959).

$V_0 = 3.3 \times 10^6$ m/sec (100-kev H_2^+ ions and 27-v electrons). The electric field should develop as shown in the following illustration:

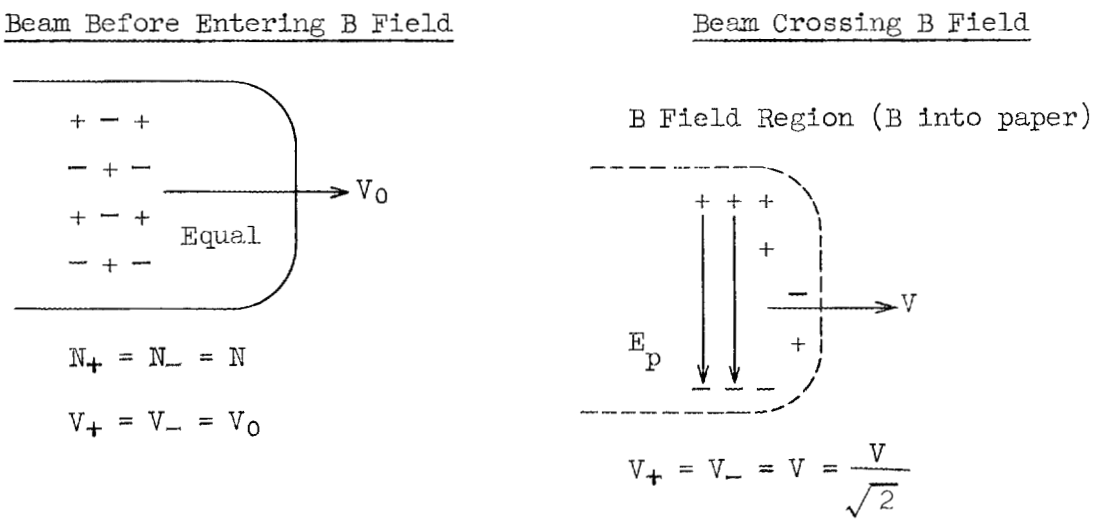

When the beam crosses the magnetic field the beam momentum is reduced by conversion of part of its kinetic energy into potential energy of electrical polarization. Since positive ions carry essentially all the energy, the energy density when in the magnetic field is given by $NMV^2/2$ (kinetic) and $\epsilon E_p^2/2$ (electrostatic) in j/m^3. Under conditions of the proposed experiment, the kinetic and electrostatic energy densities are approximately equal and polarization has taken place. Then

$$E_p = -(\bar{V} \times \bar{B}) = Bv \quad ,$$

so that

$$\frac{NMV^2}{2} = \frac{\epsilon B^2 v^2}{2} \quad ,$$

giving

$$N = \frac{\epsilon B^2}{M} \quad .$$

Assuming $\epsilon = \epsilon_0$,

$$N = \frac{\epsilon_0 B^2}{M} \text{ (number/m}^3\text{)} \quad ,$$

which indicates the particle density needed for polarization. The beam

current density can be derived by:

$$j_{+min} = NV_0 = \frac{\epsilon_0 B^2}{M} \epsilon \sqrt{\frac{2\epsilon V}{M}} \quad .$$

For a magnetic field of 4000 gauss and an accelerating potential of 100 kv, $N = 4 \times 10^8/cm^3$. The H_2^+ current required is 15 ma/cm^2. At 12,000 gauss the H_2^+ current required is 135 ma/cm^2 and $N = 3.6 \times 10^9/cm^3$.

If the MIT experiments are extrapolated to 100 kv the data show these results to be approximately in agreement. It can be seen that the same system used for the neutralized beam injector should provide enough ions and electrons for polarized plasma beam injection. The only change necessary is to lower the injection energy to approximately 100 kev so that the required density is provided. Since lower voltage is used the device will have fewer stages than the 600-kev injector, as shown in Fig. 3.14.

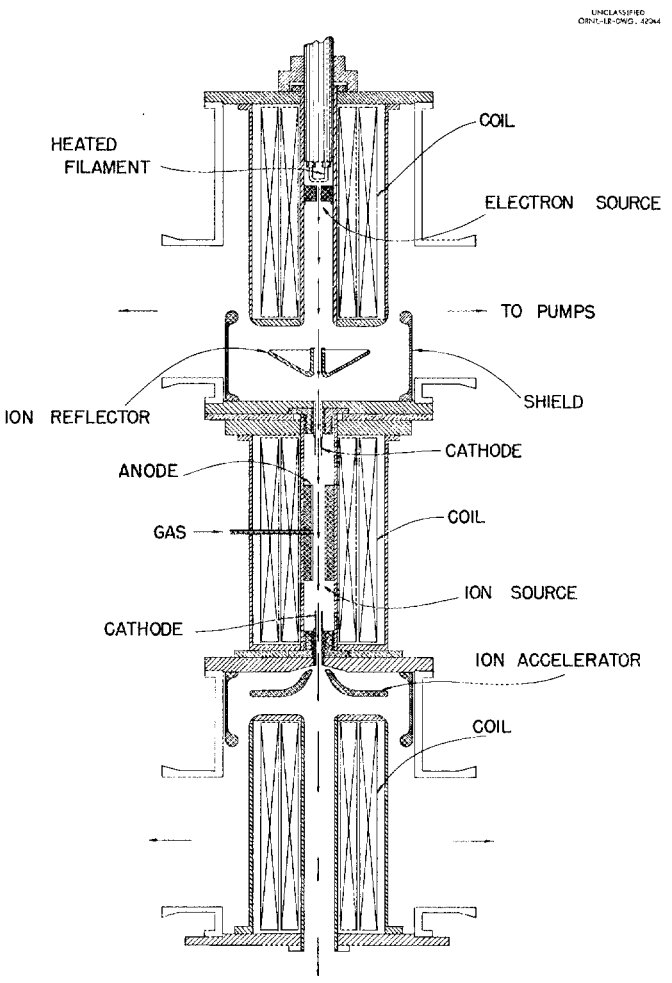

Fig. 3.14. Polarized Plasma Beam Injector.

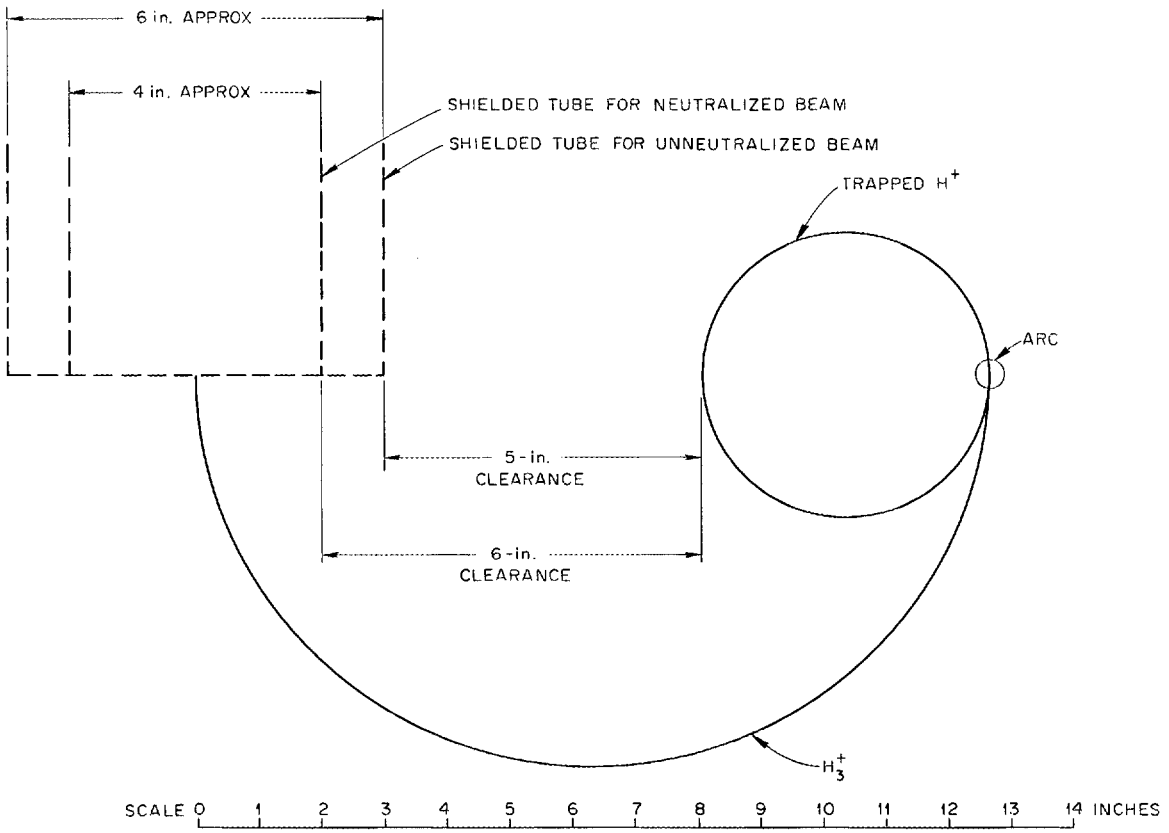

Fig. 3.16. Beam Path Using H_3^+.

The use of "polarized" streams of molecular ions and electrons would provide trapping of ions with many Larmor diameters from the entry point. Nevertheless, if the high magnetic gradient in the mirrors could be reduced, then the relative change of magnetic field strength over the cross section of a particle's orbit would also be reduced, providing better adiabatic containment. Injection of the polarized beam does not require a long section of uniform field as does the multipass molecular ion beam. Therefore when injection is changed from the molecular ion beam to the polarized beam the current in the various coils can be readjusted so that the machine has no uniform-field section at all. It becomes in reality one large magnetic mirror with slowly increasing magnetic field strength on each end. Not only are the magnetic field gradients reduced but the mirror ratio can probably also be increased.

ORNL-3044
C-44a - Nuclear Technology - Materials
M-3679 (24th ed.)

INTERNAL DISTRIBUTION

1. I. Alexeff
2. R. G. Alsmiller
3. C. F. Barnett
4. P. R. Bell
5. D. S. Billington
6. E. P. Blizard
7. C. W. Blue
8. R. L. Brown
9. C. E. Center (K-25)
10. R. A. Charpie
11. R. E. Clausing
12. R. S. Cockreham
13. D. L. Coffey
14. F. L. Culler
15. J. S. Culver
16. R. A. Dandl
17. R. C. Davis
18. S. M. DeCamp
19. J. L. Dunlap
20. H. O. Eason
21. R. S. Edwards
22. L. B. Emlet (K-25)
23. A. C. England
24. J. C. Ezell
25. J. L. Fowler
26. T. K. Fowler
27. J. E. Francis
28. J. H. Frye, Jr.
29. W. F. Gauster
30. J. H. Gibbons
31. R. A. Gibbons
32. P. M. Griffin
33. W. R. Grimes
34. E. Guth
35. D. P. Hamblen
36. C. C. Harris
37. C. S. Harrill
38. A. Hollaender
39. A. S. Householder
40. H. C. Hoy
41. R. P. Jernigan, Jr.
42. W. H. Jordan
43. C. P. Keim
44. M. T. Kelley
45. G. G. Kelley
46. R. J. Kerr
47. R. L. Knight
48. F. A. Knox
49. P. Lafyatis
50. J. A. Lane
51. N. H. Lazar
52. G. F. Leichsenring
53. T. A. Lincoln
54. S. C. Lind
55. R. S. Livingston
56. J. S. Luce
57. J. R. McNally, Jr.
58. R. J. Mackin
59. W. D. Manly
60. E. R. Mann
61. O. D. Matlock
62. F. T. May
63. K. Z. Morgan
64. O. B. Morgan
65. J. P. Murray (Y-12)
66. R. V. Neidigh
67. J. H. Neiler
68. M. L. Nelson
69. J. Neufeld
70. C. E. Normand
71. G. R. North
72. C. E. Parker
73. W. F. Peed
74. D. Phillips
75. J. F. Potts
76. M. Rankin
77. H. Postma
78. J. D. Redman
79. R. G. Reinhardt
80. P. M. Reyling
81. M. T. Robinson
82. P. W. Rueff
83. W. K. Russell
84. H. E. Seagren
85. E. D. Shipley
86. A. Simon
87. M. R. Skidmore
88. M. J. Skinner
89. A. H. Snell
90. W. L. Stirling
91. R. F. Stratton, Jr.
92. R. A. Strehlow
93. J. A. Swartout
94. E. H. Taylor

95. A. Tell
96. P. A. Thompson
97. R. E. Toucey
98. R. M. Warner
99. H. L. Watts
100. A. M. Weinberg
101. E. R. Wells
102. T. A. Welton
103. G. K. Werner
104. G. C. Williams
105. C. E. Winters
106. W. L. Wright
107. O. C. Yonts
108. W. P. Allis (consultant)
109. D. Alpert (consultant)
110. W. B. Ard, Jr. (consultant)
111. J. F. Bailey (consultant)
112. W. H. Bostic (consultant)
113. W. R. Chambers (consultant)
114. E. Creutz (consultant)
115. J. W. Flowers (consultant)
116. M. W. Garrett (consultant)
117. O. G. Harrold (consultant)
118. E. G. Harris (consultant)
119. R. Hefferlin (consultant)
120. D. E. Harrison (consultant)
121. G. W. Hoffman (consultant)
122. V. W. Hughes (consultant)
123. D. W. Kerst (consultant)
124. E. D. Klema (consultant)
125. H. Lewis (consultant)
126. F. E. Low (consultant)
127. E. W. McDaniel (consultant)
128. M. R. C. McDowell (consultant)
129. H. Mott-Smith (consultant)
130. W. B. Pardo (consultant)
131. H. K. Reynolds (consultant)
132. H. S. Robertson (consultant)
133. D. J. Rose (consultant)
134. L. P. Smith (consultant)
135. H. S. Snyder (consultant)
136. P. M. Stier (consultant)
137. J. D. Trimmer (consultant)
138. C. H. Weaver (consultant)
139. J. D. Tillman (consultant)
140. Thermonuclear Library
141. Sherwood Reading File (V. Glidewell)
142. Biology Library
143. Health Physics Library
144. Reactor Division Library
145-147. Central Research Library
148-167. Laboratory Records Department
168. Laboratory Records, ORNL RC
169-170. ORNL - Y-12 Technical Library, Document Reference Section

EXTERNAL DISTRIBUTION

171-172. Division of Research and Development, AEC, ORO (1 copy each to H. M. Roth and R. B. Martin)
173-180. Atomic Energy Commission, Washington (1 copy each to A. E. Ruark and H. S. Morton)
181-185. Los Alamos Scientific Laboratory (1 copy each to J. M. B. Kellogg and J. A. Phillips
186-187. Naval Research Laboratory (1 copy to A. C. Kolb)
188-393. Given distribution as shown in M-3679 (24th ed.) under Nuclear Technology - Materials category