MARTIN MARIETTA ENERGY SYSTEMS LIBRARIES
3 4456 0361521 0

CENTRAL RESEARCH LIBRARY
DOCUMENT COLLECTION

ORNL-2977
UC-38 - Equipment, Methods, and Techniques

IN-PILE CORROSION TEST LOOPS FOR AQUEOUS HOMOGENEOUS REACTOR SOLUTIONS

H. C. Savage
W. D. Reel

CENTRAL RESEARCH LIBRARY
DOCUMENT COLLECTION
LIBRARY LOAN COPY
DO NOT TRANSFER TO ANOTHER PERSON
If you wish someone else to see this document send in name with document and the library will arrange a loan.

OAK RIDGE NATIONAL LABORATORY
operated by
UNION CARBIDE CORPORATION
for the
U.S. ATOMIC ENERGY COMMISSION

Printed in USA. Price $2.00. Available from the
Office of Technical Services
Department of Commerce
Washington 25, D. C.

LEGAL NOTICE

This report was prepared as an account of Government sponsored work. Neither the United States, nor the Commission, nor any person acting on behalf of the Commission:

A. Makes any warranty or representation, expressed or implied, with respect to the accuracy, completeness, or usefulness of the information contained in this report, or that the use of any information, apparatus, method, or process disclosed in this report may not infringe privately owned rights; or

B. Assumes any liabilities with respect to the use of, or for damages resulting from the use of any information, apparatus, method, or process disclosed in this report.

As used in the above, "person acting on behalf of the Commission" includes any employee or contractor of the Commission, or employee of such contractor, to the extent that such employee or contractor of the Commission, or employee of such contractor prepares, disseminates, or provides access to, any information pursuant to his employment or contract with the Commission, or his employment with such contractor.

ORNL-2977
Equipment, Methods,
and Techniques

Contract No. W-7405-eng-26

REACTOR EXPERIMENTAL ENGINEERING DIVISION

IN-PILE CORROSION TEST LOOPS FOR AQUEOUS HOMOGENEOUS REACTOR SOLUTIONS

H. C. Savage
W. D. Reel

DATE ISSUED

NOV 10 1960

OAK RIDGE NATIONAL LABORATORY
Oak Ridge, Tennessee
operated by
UNION CARBIDE CORPORATION
for the
U. S. ATOMIC ENERGY COMMISSION

MARTIN MARIETTA ENERGY SYSTEMS LIBRARIES

3 4456 0361521 0

FOREWORD

The in-pile corrosion test loops described in this report were developed and operated by members of the Homogeneous Reactor Project of Oak Ridge National Laboratory. Corrosion studies for the HRP are under the general supervision of E. G. Bohlmann. Original development work on the in-pile loop program was done by G. H. Jenks, and the program is now being directed by G. H. Jenks and H. C. Savage. Others who have contributed substantially to the design, development, fabrication, or operation of the in-pile loops are J. N. Baird, S. J. Ball, W. N. Bley, S. E. Bolt, N. C. Bradley, V. A. DeCarlo, C. B. Graham, D. T. Jones, R. A. Lorenz, T. H. Mauney, J. R. McWherter, J. L. Redford, J. A. Russell, A. J. Shor, D. S. Toomb, Jr., F. J. Walter, and C. D. Zerby.

The in-pile loop program has been described regularly in HRP Quarterly Progress Reports, beginning with the report in October 1952 (ORNL-1424) and continuing through the report for the period ending on January 31, 1960 (ORNL-2920). Descriptions of the engineering development of the loops and summaries of each of the loop experiments are included in the 27 reports of that progress-report series.

A motion picture entitled "In-Pile Loop Tests of Homogeneous Reactor Materials" has been produced by Oak Ridge National Laboratory. This film (16 mm, color, sound; projection time, 25 minutes) describes a typical in-pile loop experiment in the radiation-corrosion program of the Homogeneous Reactor Project at ORNL. Particular emphasis is given to the loop components and auxiliary equipment and the procedure used in performing the experiment and its subsequent examination in hot cells. A copy of the film may be borrowed, without cost, from the film library in the Public Information Division of the nearest AEC Operations Office.

CONTENTS

	Page
FOREWORD	iii
ABSTRACT	1
1. PURPOSE AND SCOPE OF THE PROGRAM	1
2. EXPERIMENTAL FACILITIES AND PROCEDURES	2
3. DESCRIPTION OF LOOP AND COMPONENTS	4
3.1 General Requirements for Simulation of a Reactor	4
3.2 Description of Experimental Beam Holes	5
3.3 Basic Design of Loop	7
3.3.1 Materials of Construction	7
3.3.2 Circulating Pump	10
3.3.3 Loop Heater	12
3.3.4 Loop Cooler	13
3.3.5 Core Cooler	13
3.3.6 Pressurizer and Pressurizer Heaters	14
3.3.7 Loop Core Section	17
3.3.8 Corrosion Test Specimens	18
4. AUXILIARY EQUIPMENT	22
4.1 Fuel Containment	26
4.1.1 Loop Container	26
4.1.2 Container Bulkhead	27
4.1.3 Beam-Hole Liner	27
4.2 Shield Plug	27
4.3 Loop and Shield-Plug Connector	27
4.4 Valves and Tubing	31
4.5 Fuel Storage and Weigh Tank	31
4.6 Gas Storage and Holdup Tank	31
4.7 Fuel Sampling Equipment	33
4.7.1 Standard Drain Volume	33
4.7.2 Sample Tank and Shielded Carrier	35
4.8 Fuel and Water Addition Equipment	35
4.9 Gas Addition and Metering Equipment	36
4.10 Charcoal Traps in Off-Gas System	36
4.11 Loop Retraction Mechanism	37
4.12 Loop Carrier	38
5. LOOP INSTRUMENTATION	39
5.1 Temperature Measurement and Control	39
5.1.1 Loop Temperature	39
5.1.2 Pressurizer Temperature	41
5.2 Pressure Measurements	42

Page

5.3 Miscellaneous Power Measurements 42
5.3.1 Pump Power 42
5.3.2 Loop Heaters 42
5.3.3 Pressurizer Heaters 43
5.4 Radiation Monitors 43
5.5 Reactor Safety Interlocks and Alarm Conditions 44
5.5.1 Fuel Circulating Pump 44
5.5.2 Low Loop Temperature 44
5.5.3 High Loop Temperature 45
5.5.4 High Core Temperature 45
5.5.5 Low Pressurizer Inlet Temperature 45
5.5.6 High Pressurizer Temperature 46
5.5.7 Low Loop Pressure 46
5.5.8 High Loop Pressure 46
5.5.9 Loop Leak 46
5.5.10 Capillary-Tube Leak 46
5.5.11 Beam-Hole Radiation 47

6. LOOP TESTING AND PREPARATORY OPERATIONS 47
6.1 Pressure-Temperature Correlation 47
6.2 Out-of-Pile Operation 47

7. IN-PILE OPERATING CONDITIONS AND PROCEDURES 49
7.1 Checkout Operation at the Reactor Prior to Reactor Installation 50
7.2 Initial Fuel and Oxygen Addition 50
7.3 Installation Procedure 50
7.4 In-Pile Operation of Loop 51
7.4.1 Determination of Steam, Excess-Oxygen, and Radiolytic-Gas Pressure 51
7.4.2 Explosive Mixtures in Pressurizer 52
7.4.3 Prevention of Bubble Formation in the Loop Main Stream 53
7.4.4 Gas Addition 53
7.4.5 Pressurizer Flow-Rate Measurement 53
7.4.6 Loop Main-Stream Flow 54
7.4.7 Fission and Gamma Heat Measurement 54
7.4.8 Fuel Sampling 55
7.4.9 Fuel Addition 55
7.4.10 Loop Draining and Rinsing 56
7.4.11 Emergency Drain 56
7.5 Removal Procedure 56

8. SUMMARY OF OPERATING EXPERIENCE 57
8.1 Loop and Components 57
8.1.1 Containment 57
8.1.2 Loop Heaters 57
8.1.3 Pressurizer Heaters 57
8.1.4 Loop Cooler 58
8.1.5 Core Cooler 58
8.1.6 Circulating Pump 58

Page

8.2 Auxiliary Equipment 59
8.2.1 Valves 59
8.2.2 Fuel Sampling Equipment 60
8.2.3 Fuel and Water Addition System 60
8.2.4 Gas Addition and Metering System 60
8.2.5 Charcoal Traps 60
8.2.6 Loop Retraction Mechanism 60
8.3 Instrumentation 60

9. COST SUMMARY 61

10. APPENDIX 63

LIST OF ILLUSTRATIONS

Figure	Title	Page
1	Plan View of In-Pile Loop and Operating Facility, LITR	3
2	Perspective Drawing of In-Pile Loop and Operating Facility, LITR	4
3	Beam-Hole Dimensions, In-Pile Loop Facilities	5
4	Thermal-Neutron Flux Gradient (Unperturbed) in Beam Holes HN-1, ORR, and HB-2 and HB-4, LITR	6
5	Schematic Diagram and Physical Data for Typical In-Pile Loop	8
6	In-Pile Loop Assembly Showing Outlines of HB-2 and HB-4 Containers	9
7	Photograph of In-Pile Loop	9
8	High-Pressure Closure, Titanium to 347 Stainless Steel	10
9	5-gpm Canned-Rotor Centrifugal Pump	10
10	Performance Curves of In-Pile Loop Pump with Three-Phase, 220-v Stator for Power Supply Frequencies of 40, 60, and 80 cps	11
11	Heater-Cooler for ORR Loop	13
12	Cooling Capacity of Two Heater-Cooler Units, ORR Loop	14
13	In-Pile Loop Core Cooler, ORR Loop	15
14	Cooling Capacity of Core Cooler, ORR Loop	16
15	Core for LITR Loop	17
16	Core for ORR Loop	18
17	Coupon Holder and Coupons with Velocity-Distribution Curve	19
18	In-Line Holder for Coupon Specimens	19
19	Corrosion Specimen Assembly in Core Section, ORR Loop	20
20	Impact and Tensile Specimens	21
21	Array of Impact Specimens Surrounding a Core Coupon Holder. Photograph Taken in Hot Cell After Removal from the Loop.	21
22	Stressed- and Coupled-Specimen Assemblies, LITR Loop	22
23	Flowsheet of the ORR In-Pile Loop Facility	23
24	Equipment Chambers with Cover Plates and Shielding Removed, ORR Loop	24
25	Top View of Large Equipment Chamber with Cover Removed, ORR Loop	25
26	LITR In-Pile Loop Package with Container Jacket in Place	26
27	Loop-Container Bulkhead Showing Details of Thermocouple, Electrical, and Tubing Penetrations	28

Figure	Title	Page
28	Loop-Container Bulkhead	29
29	Loop-and-Shield-Plug Connector: Connector Halves and View Showing Service Lines Through Connector . . .	30
30	Valves Used in ORR In-Pile Loop Facility, Nonrotating-Stem Type	32
31	Valve-Handle Penetration and Seal Through Equipment-Chamber Wall	33
32	Fuel Sample Tank and Carrier	34
33	Fuel Sample Tank Connector	35
34	"Unit" Charcoal Trap	36
35	Charcoal-Trap Installation, ORR Loop Facility	37
36	Retraction Mechanism, ORR In-Pile Loop	38
37	Loop Carrier	38
38	In-Pile Loop Control Panel, LITR HB-4 Facility	40
39	Thermocouple Locations, LITR In-Pile Loop	41
40	Relationship Between Pressurizer Flow Rate and Pressurizer Heater Power	43
41	Safety Circuit Information Flow Diagram	45
42	Effect of Pressurizer Jacket Temperature on Oxygen Partial Pressure in Pressurizer	48

IN-PILE CORROSION TEST LOOPS FOR AQUEOUS HOMOGENEOUS REACTOR SOLUTIONS

H. C. Savage W. D. Reel

ABSTRACT

An in-pile corrosion test loop is described which is used to study the effect of reactor radiation on the corrosion of materials of construction and the chemical stability of fuel solutions of interest to the Aqueous Homogeneous Reactor Program at ORNL.

Aqueous solutions of uranyl sulfate are circulated in the loop by means of a 5-gpm canned-rotor pump, and the pump loop is designed for operation at temperatures to 300°C and pressures to 2000 psia while exposed to reactor radiation in beam-hole facilities of the LITR and ORR. Operation of the first loop in-pile was begun in October 1954, and since that time 17 other in-pile loop experiments have been completed.

Design criteria of the pump loop and its associated auxiliary equipment and instrumentation are described. In-pile operating procedures, safety features, and operating experience are presented. A cost summary of the design, fabrication, and installation of the loop and experimental facilities is also included.

1. PURPOSE AND SCOPE OF THE PROGRAM

One of the basic advantages inherent in aqueous homogeneous reactors is the fluid state of the fuel. This feature makes possible a simple mechanical design, a low fuel inventory with high power density, continuous processing of the fuel to remove fission products and radiation-damage products, and maximum utilization of the neutrons produced in the fissioning of the fuel. Concomitant with these advantages, however, are important and difficult problems. Since extremely radioactive materials are circulated at high temperatures and high pressures, the materials of construction must be reliable; even small leaks cannot be tolerated. Also, since the components of the circulation system become radioactive from contact with the fuel, maintenance requires special equipment for remote operation and presents unique problems. Therefore the effect of varied dynamic, chemical, and radiation conditions on possible homogeneous-reactor fuel systems and materials of construction must be established before the technology for homogeneous reactors can be considered adequate. The in-pile loop program of the ORNL Homogeneous Reactor Project, in addition to the program of experimental operation of homogeneous reactors, is designed to aid in supplying the required information.

Major Project attention has been given to reactors in which a solution of uranyl sulfate and water (both H_2O and D_2O) is circulated through a reacting core and an external heat exchanger. In such a circulating-fuel reactor system, many factors affect the behavior of materials. Among these factors are the power density in the core, the flow velocities and turbulence, the composition of the fuel solution, the operating temperature and pressure, and the neutron flux. The chemical stability of the fuel solution under reactor operating conditions also must be investigated. The irradiation of static- and rocking-autoclave assemblies permits the simulation of some of the conditions encountered in homogeneous-reactor systems but does not allow the duplication of the dynamic conditions, which have been shown to be important in both in-pile and out-of-pile studies. Forced-circulation loops irradiated within experimental reactor beam holes provide opportunities for studying dynamic variables and more nearly approximate the environmental conditions found in an operating homogeneous reactor.

2. EXPERIMENTAL FACILITIES AND PROCEDURES

At ORNL three reactors--the ORNL Graphite Reactor, the Low-Intensity Test Reactor (LITR), and the Oak Ridge Research Reactor (ORR)--are available for use in irradiation studies. The LITR and ORR, which have slow-neutron fluxes greater than that of the Graphite Reactor, were selected for use in the in-pile loop program, and three horizontal beam-hole facilities--two in the LITR and one in the ORR--have been used.

The in-pile loop program was designed to investigate, in successive experiments, the many factors affecting the behavior of construction materials and fuel solutions under reactor irradiation. To this end a replaceable loop package and permanent-operating-facility concept was used. A plan view and perspective of the loop package and facility are shown in Figs. 1 and 2. Each pump-loop assembly and the corrosion test specimens contained in it constitute an experiment. The entire loop is dismantled and examined after in-pile operation. The operating facility is designed to accommodate a succession of loop packages. It was believed that this approach, as opposed to a fixed loop with replaceable test specimens, would provide more complete information on materials behavior by examination of loop components, be safer because of the opportunity to make improvements on each successive loop, facilitate containment of the radioactive fuel solution, and entail less reactor down-time for installation and checkout. An operationally exact mockup of the in-pile facility, in which each loop package is tested prior to in-pile operation, contributed substantially to successful prosecution of the program.

After a loop assembly[1] has been constructed to fit one of the horizontal facilities and after it has demonstrated satisfactory performance out-of-pile, it is placed in position in the reactor. Fuel solution is then circulated in the loop for a predetermined length of time or until a failure in some part of the system requires that the assembly be removed from the reactor. While the experiment is in progress, all operations (sampling of the fuel solution, adding gas to the system, and replacing fuel removed by sampling) are performed by means of controls at the face of the shield. The loop is drained and purged,

[1] G. H. Jenks, D. T. Jones, and H. C. Savage, "Circulating In-Reactor Loops," Proceedings of the Fifth Hot Laboratory Operation and Equipment Conference, Vol. III, Pergamon Press, New York, London, Paris (1957), pp 237-244.

UNCLASSIFIED
ORNL-LR-DWG 19295A

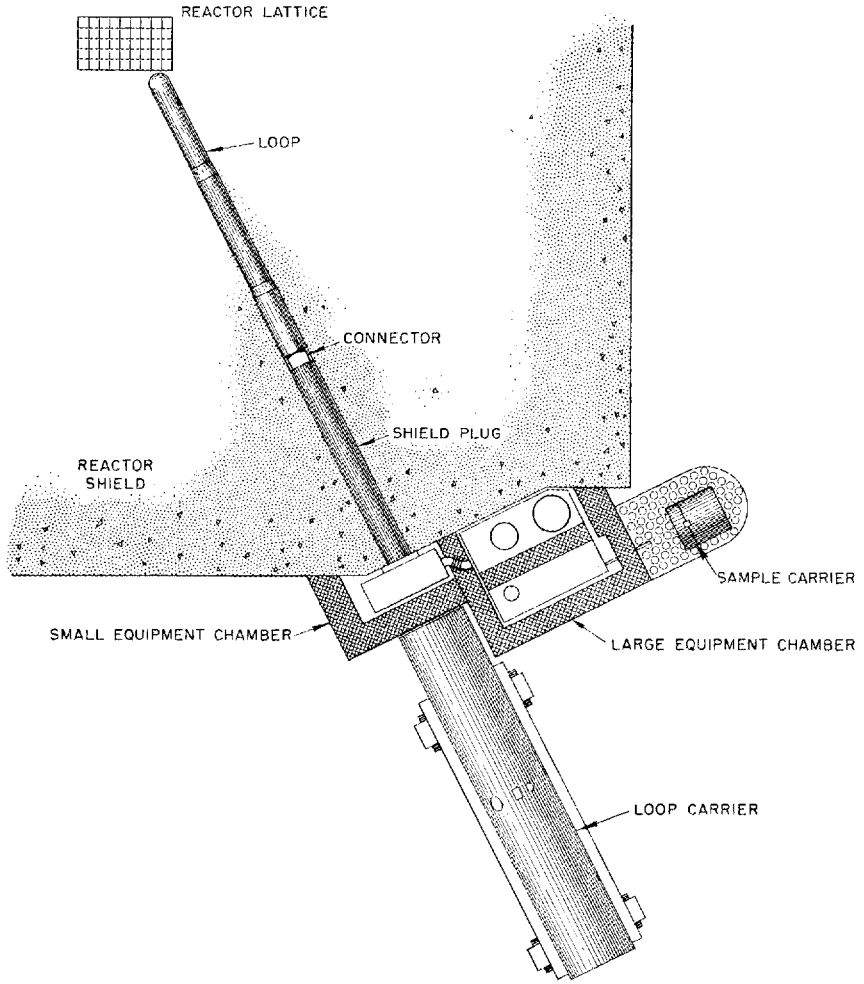

Fig. 1. Plan View of In-Pile Loop and Operating Facility, LITR.

also by the use of equipment at the face of the shield, before it is removed from the reactor. After an experiment is terminated, the loop is separated from its shield plug and taken to a hot cell for dismantling.[2] Small sections that contain corrosion specimens are taken out of the assembly and transferred to other facilities, where the specimens are removed and examined.

[2]D. T. Jones et al., "In-Pile Circulating Loop Is Dismantled in This Equipment," Nucleonics 12, 76 (Nov. 1954).

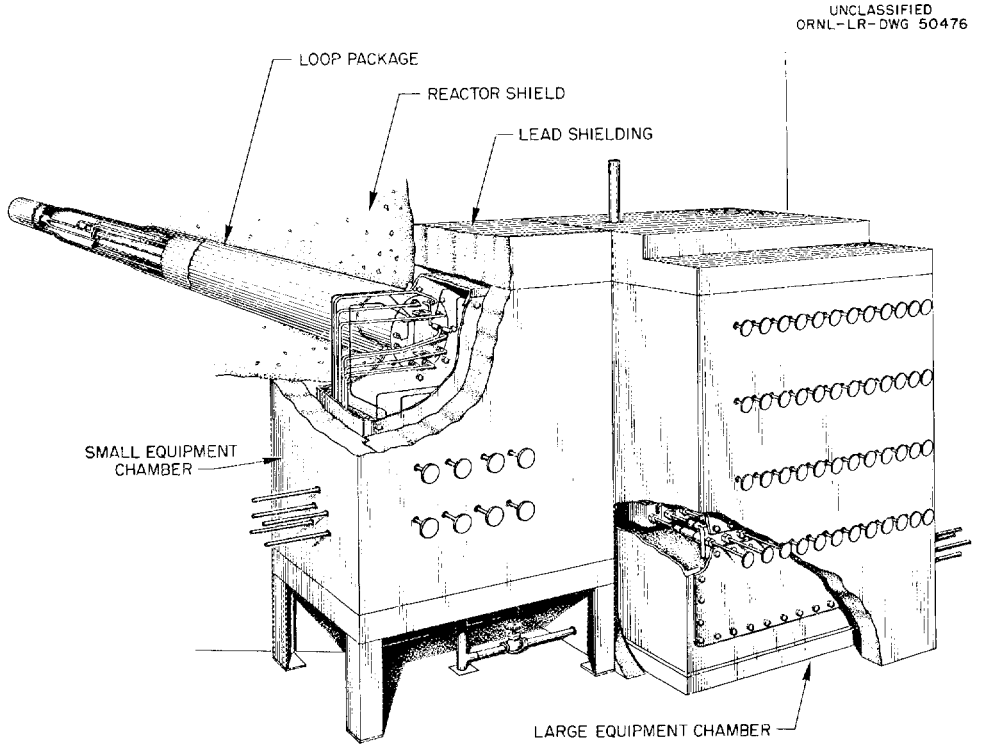

Fig. 2. Perspective Drawing of In-Pile Loop and Operating Facility, LITR.

3. DESCRIPTION OF LOOP AND COMPONENTS

The primary objective of the loop design is to simulate the high-pressure fuel system of an aqueous homogeneous reactor; the chemical, radiation, and dynamic conditions in the loop should correspond, insofar as possible, to those conditions in a reactor. In addition to the requirements of the primary objective, the design of the loop package and its components are restricted by the size and shape of the irradiation facilities, and the neutron flux available in the LITR and ORR beam holes dictates the radiation conditions which can be achieved in the loop.

3.1 General Requirements for Simulation of a Reactor

A loop that is to operate in a horizontal hole of a reactor must meet certain general specifications if there is to be any similitude between the loop and a reactor fuel system. One portion of the loop must extend into the high-flux region of the hole, near the reactor lattice, and the other portion must be out of the high-flux region, back toward the outer face of the shield. The volume of fuel contained inside the irradiated zone should be an appreciable fraction of the total volume, to simulate reactor conditions, and it is desirable that the surface-area-to-volume ratio be kept small to minimize the buildup of corrosion products in the fuel solution. The in-pile testing should be carried out at fission power densities, flow velocities, temperatures, and pressures approximating those proposed for reactors. The materials used in the construction

of the loop should be the same as those used or proposed for use in a reactor, and the fuel solution circulated through the loop should have a chemical composition similar to that of solutions proposed for use in a reactor.

3.2 Description of the Experimental Beam Holes

The geometry and neutron-flux distribution of the two LITR facilities, HB-2 and HB-4, and the ORR facility, HN-1, used in the in-pile loop program influenced the design of the in-pile loops. The approximate dimensions of these horizontal beam holes are shown in Fig. 3. Since the three beam holes differ only slightly in over-all and tapered-section dimensions, it has been possible to provide a basic loop package suitable for use in any one of the facilities with only minor dimensional modifications.

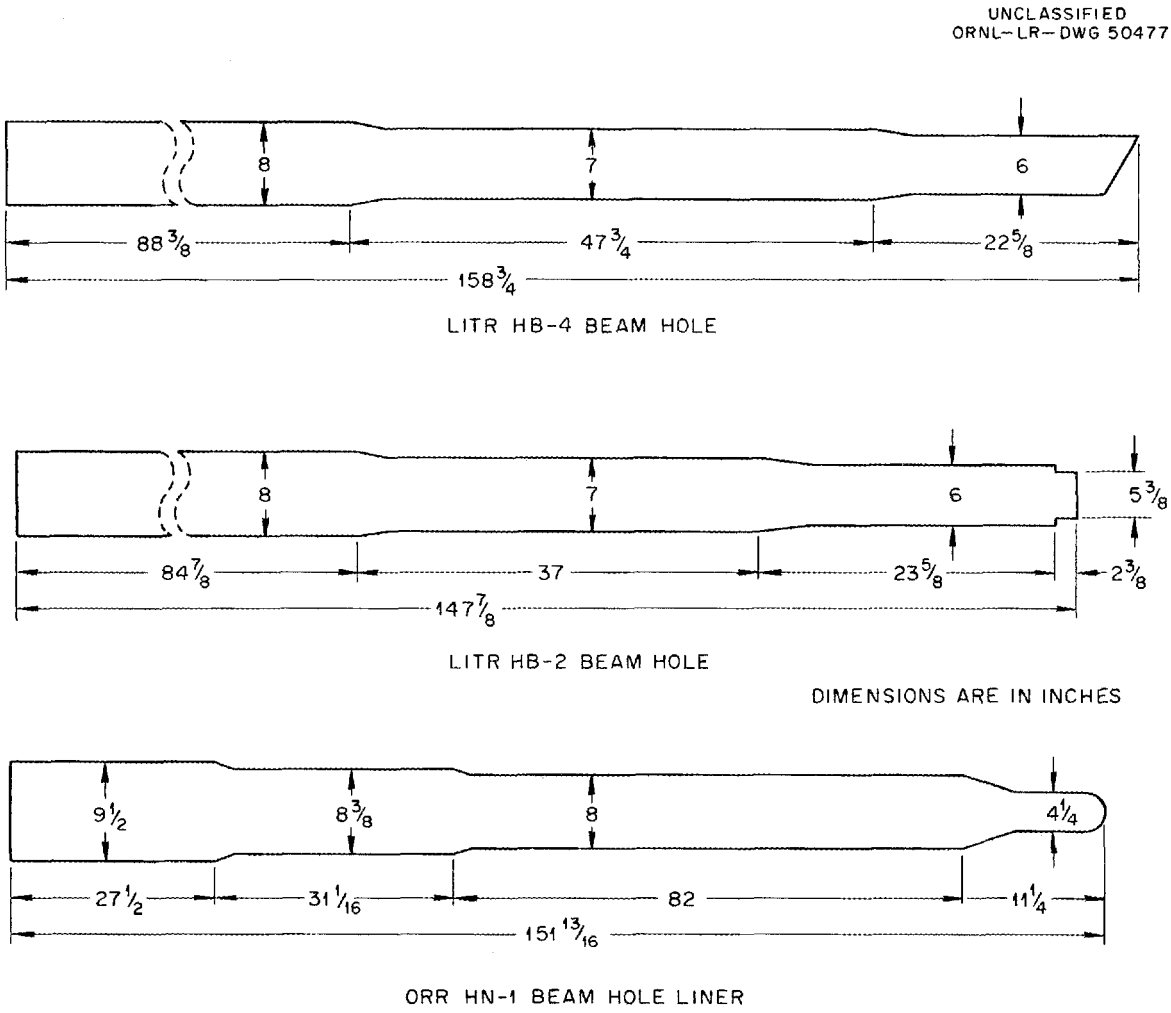

Fig. 3. Beam-Hole Dimensions, In-Pile Loop Facilities.

The LITR is designed to operate at a power level of 3 Mw. At this power level the neutron-flux distribution in holes HB-2 and HB-4 is shown in Fig. 4. Current operation of the ORR is to a maximum of 20 Mw, and at this power level the slow-neutron flux distribution in hole HN-1 is also shown in Fig. 4. In all three facilities the flux declines rapidly with distance from the reactor lattice. For this reason the loop was designed so that an appreciable fraction (~22%) is contained in that section of the loop closest to the reactor lattice, and the remaining solution in other portions of the loop undergoes very little, if any, fissioning. In one sense this duplicates an aqueous homogeneous reactor in that fissioning occurs almost exclusively in the core section. Advantage is taken of this fact to install corrosion-test specimens in the loop in both the forward position where fissioning occurs, and in positions removed from the forward position. Thus in each loop the corrosion effect in the presence of nuclear fissioning can be compared directly with the effect in the absence of nuclear fissioning but with solution containing fission products.

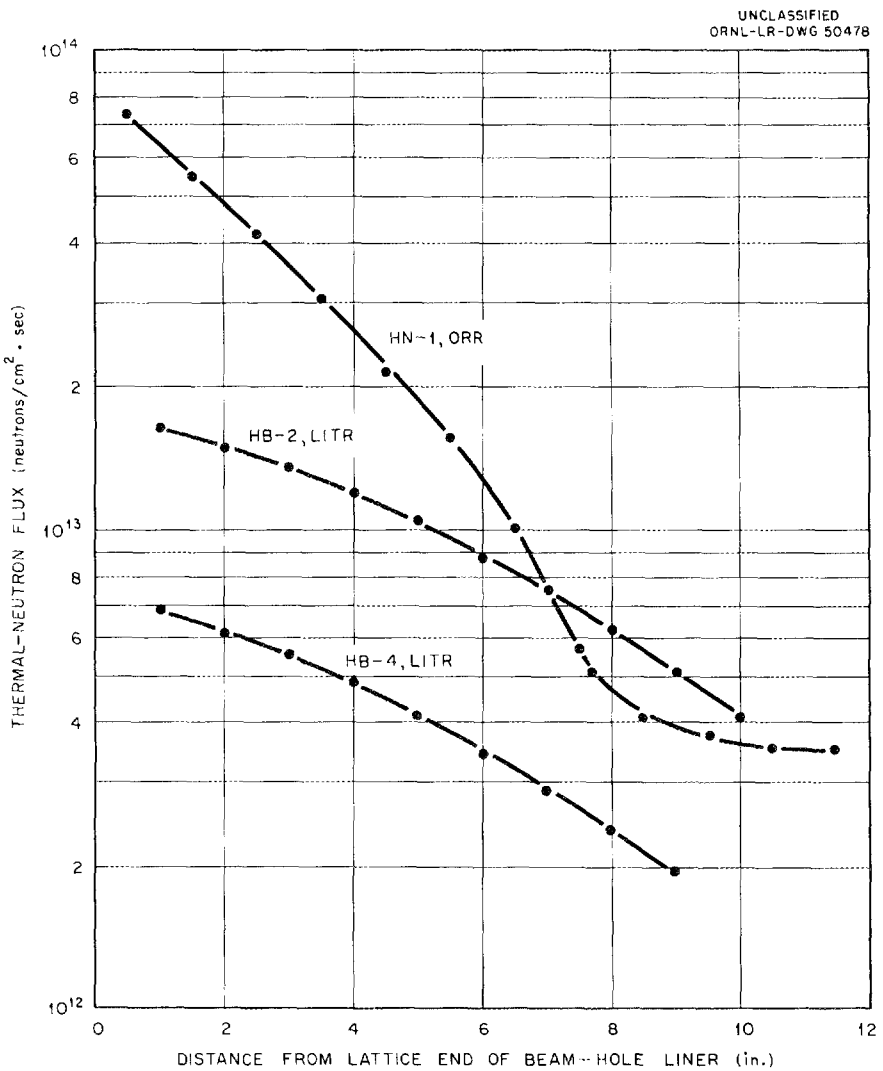

Fig. 4. Thermal-Neutron Flux Gradient (Unperturbed) in Beam Holes HN-1, ORR, and HB-2 and HB-4, LITR.

3.3 Basic Design of Loop

A schematic diagram and physical data for a typical in-pile loop are given in Fig. 5. Currently the loop is designed for operation at temperatures to 300°C and at pressures to 2000 psi, whereas initial loops were designed for and operated at only 250°C and 1000 psi. Increasing the operating temperature and pressure of the loop merely required an increase in the wall thicknesses of various loop components and did not alter the basic loop structure. The loop designed for operation in the ORR differs from those designed for operation in the LITR only in the internal configuration of the core section and in the loop heating and cooling capacity. Again, these differences do not affect the basic design.

The portion of the loop exposed to the region of high neutron flux is enlarged so that an appreciable fraction of the fuel contained in the system will be irradiated. This enlarged section, called the "core," contains an array of corrosion specimens as does the "in-line" sample holder, which is installed in that portion of the loop outside the high-flux region.

The loop is also equipped with a pressurizer and pressurizer-heater, through which a small portion of the fuel solution circulates at a low rate, the necessary heaters and coolers for maintaining loop temperatures, and a small canned-rotor pump for circulating fuel. Figure 6 illustrates the arrangement of the components of the loop assembly. Details shown are those incorporated in the loops designed for operation in the LITR.

Figure 7 is a photograph of an in-pile loop. The over-all length of the loop, including the pump, is about 7 ft, and all components lie within a circular cross section not exceeding 8 in. in diameter. The total loop volume is 1800 ml, of which 1550 ml is occupied by fuel solution, leaving 250 ml of vapor space in the pressurizer when operating at temperature and pressure. Fuel solution is distributed as follows: 450 ml in the 3/8-in. sched-40 piping which interconnects the pump and core, 300 ml in the core section, 250 ml in the pump, and 550 ml in the pressurizer and its interconnecting tubing.

The pump delivers 5 to 6 gpm against a 40-ft head, so that the average linear flow velocity in the 3/8-in. main loop piping is 8.5 fps. The average linear flow velocity is 0.8 fps in the core section of the LITR loops and 2 fps in the core section of the ORR loop. Flow velocity past corrosion test specimens is variable, with velocities up to 45 fps being obtained by means of special holders which provide a tapered channel to direct and increase the flow past the specimens.

The loop is connected to auxiliary equipment at the reactor face by means of four tubes of capillary dimensions. Two of these tubes are joined to the main-stream portion of the loop, and they are used in making fuel additions, in withdrawing samples of solution, and in draining and purging the loop. The other two tubes open into the gas space in the pressurizer. One is used to connect the loop with strain-gage pressure cells at the face of the reactor, and the other is used to make gas additions to the loop.

3.3.1 Materials of Construction

Thus far, most of the loops have been fabricated entirely of type 347 stainless steel (excluding corrosion test specimens, specimen holders, and pump bearings), since this has been the optimum material of construction of all components and piping, external to the core vessels, in HRE-1 and HRE-2.

VOLUMES*

COMPONENT	VOLUME IN COMPONENT (cc)	FLUID VOLUME WHEN COLD (cc)	FLUID VOLUME WHEN HOT (cc)
BACK OF PUMP	115	115	115 AT 60°C
PUMP SCROLL	107	107	107 AT 250°C
CORE	300	300	300 AT 250°C
PRESSURIZER	550	54	300 AT 280°C
LOOP PIPE 3/8 in. Sch. 40	443	443	443 AT 250°C
TOTAL	1510	1019	1265

*VOLUMES VARY SLIGHTLY IN DIFFERENT LOOPS BECAUSE OF MINOR CHANGES.

CAPACITIES OF HEATERS AND COOLERS

HEATER OR COOLER	MINIMUM (watts)	MAXIMUM (watts)
PRESSURIZER LINE HEATER	0	1500 AT 220 VOLTS
LOOP HEATER	0	3000 AT 220 VOLTS
LOOP COOLER*		
PUMP COOLER	750 AT 0.25 gpm	800 AT 3 gpm
HEATER JACKET ON PRESSURIZER	0	350 AT 110 VOLTS

*CAPACITY VARIES AS REQUIRED BY LITR OPERATION.

LINE SIZE

COMPONENT	LINE SIZE (MATERIAL 347 STAINLESS STEEL)
MAIN LOOP	3/8 in. Sch. 40 PIPE
CORE WALL	2 in. Sch. 80 PIPE
PRESSURIZER	1¼ in. Sch. 80 PIPE
PRESSURIZER LINE	¼ in. BWG 20 TUBING
PUMP DRAIN	0.090 in. OD – 0.050-in. ID TUBING
LOOP DRAIN	0.090 in. OD – 0.050-in. ID TUBING
GAS ADDITION LINE	0.060 in. OD – 0.020-in. ID TUBING
PRESSURE LINE	0.080 in. OD – 0.040-in. ID TUBING
PRESSURIZER LINE HEATER	¼ in. BWG 18 TUBING

PRESSURES

COMPONENT	MAIN STREAM (250°C)	PRESSURIZER (280°C)
STEAM	577 psi	930 psi
O_2	100 psi	70 psi
$2H_2 + O_2$	100 psi	12 psi
TOTAL	777 psi	1012 psi

FLOW RATES*

COMPONENT	FLOW RATE	VELOCITY
MAIN LOOP	~5 gpm	~8.5 ft/sec
PRESSURIZER LINE	6 cc/sec	1.20 ft/sec
PRESSURIZER LINE HEATER	6 cc/sec	10.4 ft/sec
PRESSURIZER (300 cc)	6 cc/sec	0.0397 ft/sec
SAMPLE HOLDER (Maximum)	5.8 gpm	51.0 ft/sec

*LOOP AT OPERATING TEMPERATURE AND PRESSURE.

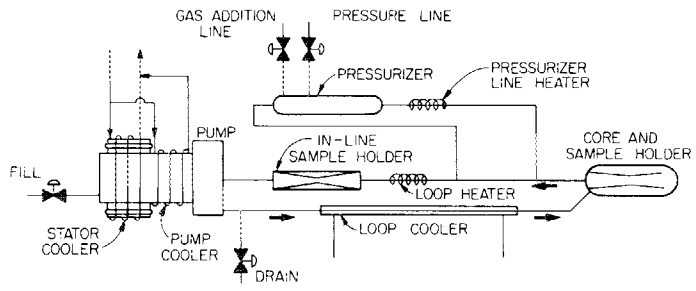

AREAS

SECTION OF LOOP	AREA (cm^2)
MAIN LINE AT 250°C	2000
PRESSURIZER AT 280°C	400

RESIDENCE TIME

COMPONENT	RESIDENCE TIME (sec)	IN-PILE ΔT (°C)	OUT-PILE ΔT (°C)
LOOP COOLER	0.359	1.26	1.26
CORE	0.82	0.530	0.0
LOOP HEATER	0.1603	0.460	1.26
PUMP SCROLL	0.292	0.566	0.566
PRESSURIZER HEATER	0.117	30.0	30.0
PRESSURIZER LINE	3.4	0.0	0.0
PRESSURIZER	50.		
COMPLETE LOOP	2.32		
COMPLETE PRESSURIZER	56.0		

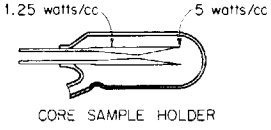

SAMPLE HOLDERS

SAMPLE HOLDER	MATERIAL IN-PILE	ΔP* (5.8 gpm)
IN-LINE	VARIABLE	16.2 ft
CORE	VARIABLE	20.5 ft

*EACH SAMPLE HOLDER IS CALIBRATED BEFORE INSTALLATION IN THE LOOP. SOME VARIATION OF ΔP IS OBSERVED.

Fig. 5. Schematic Diagram and Physical Data for Typical In-Pile Loop.

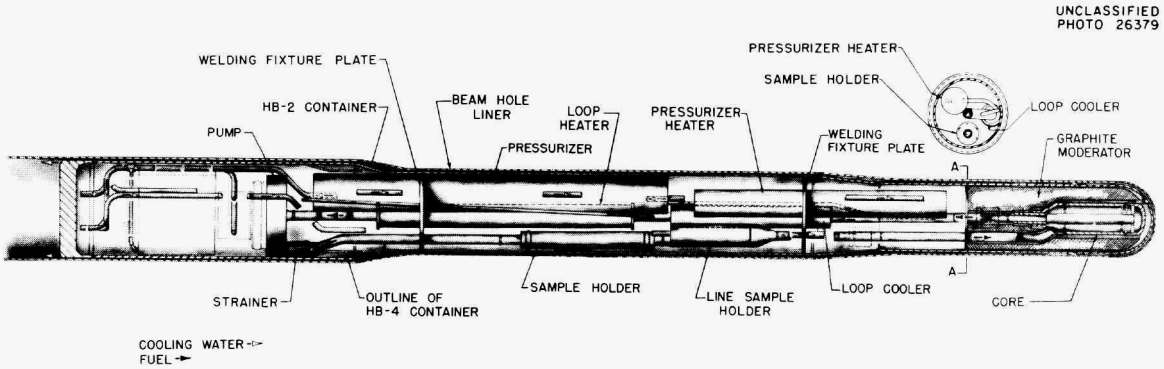

Fig. 6. In-Pile Loop Assembly Showing Outlines of HB-2 and HB-4 Containers.

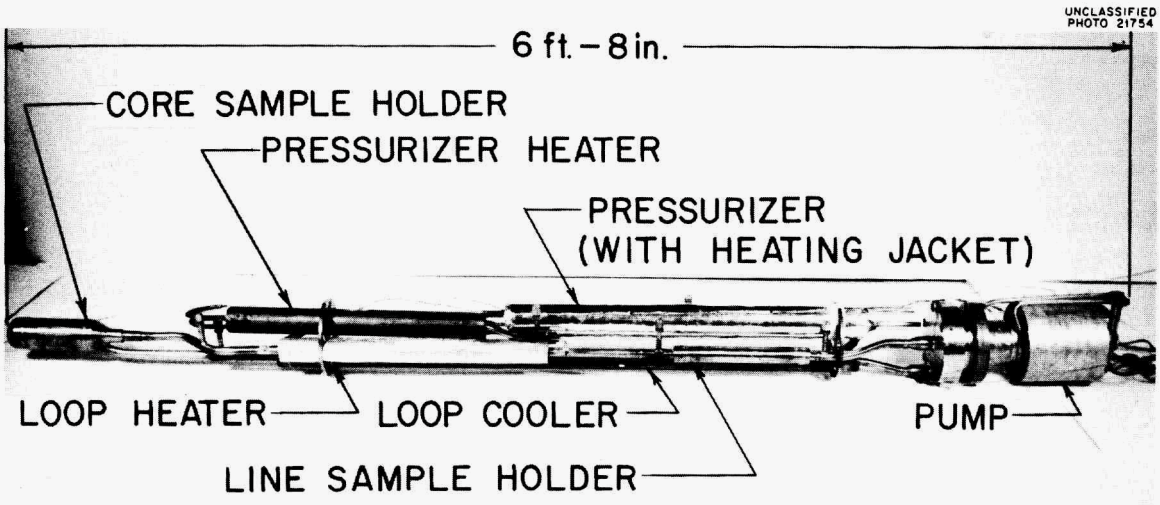

Fig. 7. Photograph of In-Pile Loop.

In order to extend the in-pile loop testing to fuel solutions which were of interest but were potentially highly corrosive to type 347 stainless steel under reactor radiation, a titanium core section was incorporated in one loop and another was constructed entirely of titanium. Normally the loops are of all-welded construction. Heliarc welding is used, and each weld is checked both by dye-penetrant and by x-ray examination. However, in the loop which used the titanium core, two mechanical joints were used to join a titanium core section to the stainless steel loop piping. A specially designed transition joint (Fig. 8) was used in this application.

In order to ensure the quality of all material used in a loop, the origin, chemical composition, and metallurgical history are checked. Inspection by means of applicable techniques, such as x-ray, dye-penetrant, metallographic, and ultrasonic examinations ensures freedom from physical defects. In the case of type 347 stainless steel, representative samples of each lot or heat are subjected to the boiling 65 wt % nitric acid test in accordance with the procedure recommended by ASTM A262-55T as an additional quality-control test. A mean corrosion rate for five 48-hr test periods of not more than 0.002 in. per month is required for material used in the in-pile loops.

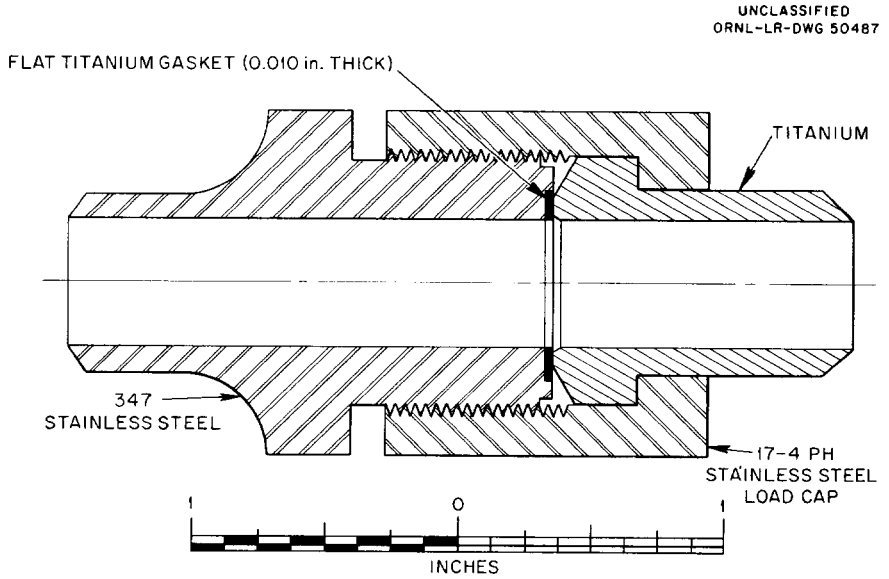

Fig. 8. High-Pressure Closure, Titanium to Type 347 Stainless Steel.

3.3.2 Circulating Pump

Fuel solution is circulated in the loop by a small canned-rotor pump of the centrifugal type (Fig. 9). It is designed for approximately 5-gpm flow against a head of 40 ft when pumping solution at 300°C and 2000 psi. A typical performance curve for this pump is shown in Fig. 10.

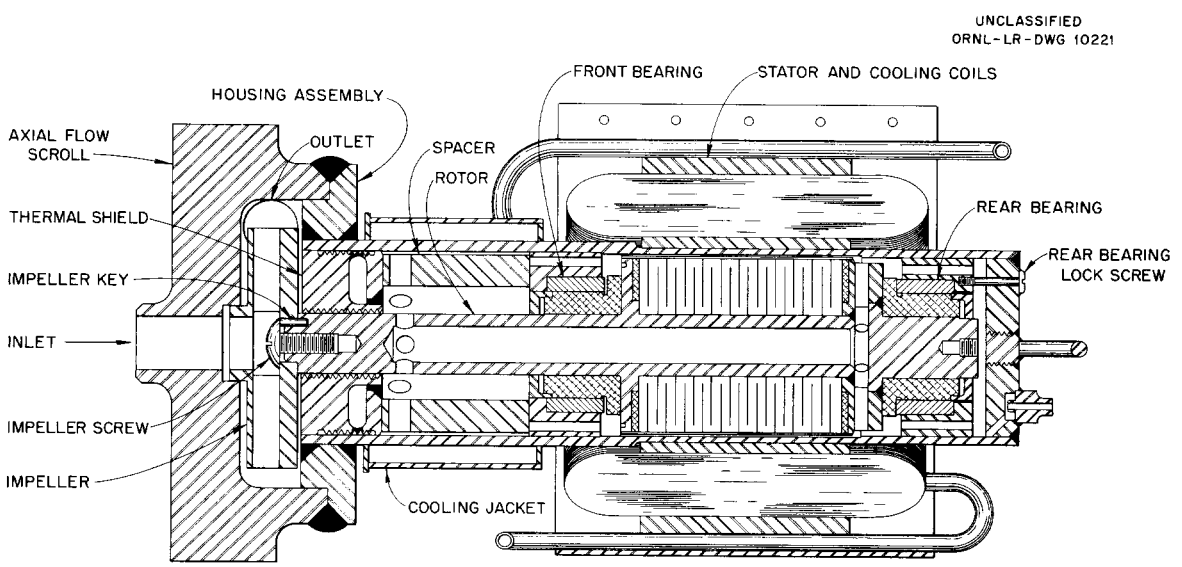

Fig. 9. 5-gpm Canned-Rotor Centrifugal Pump.

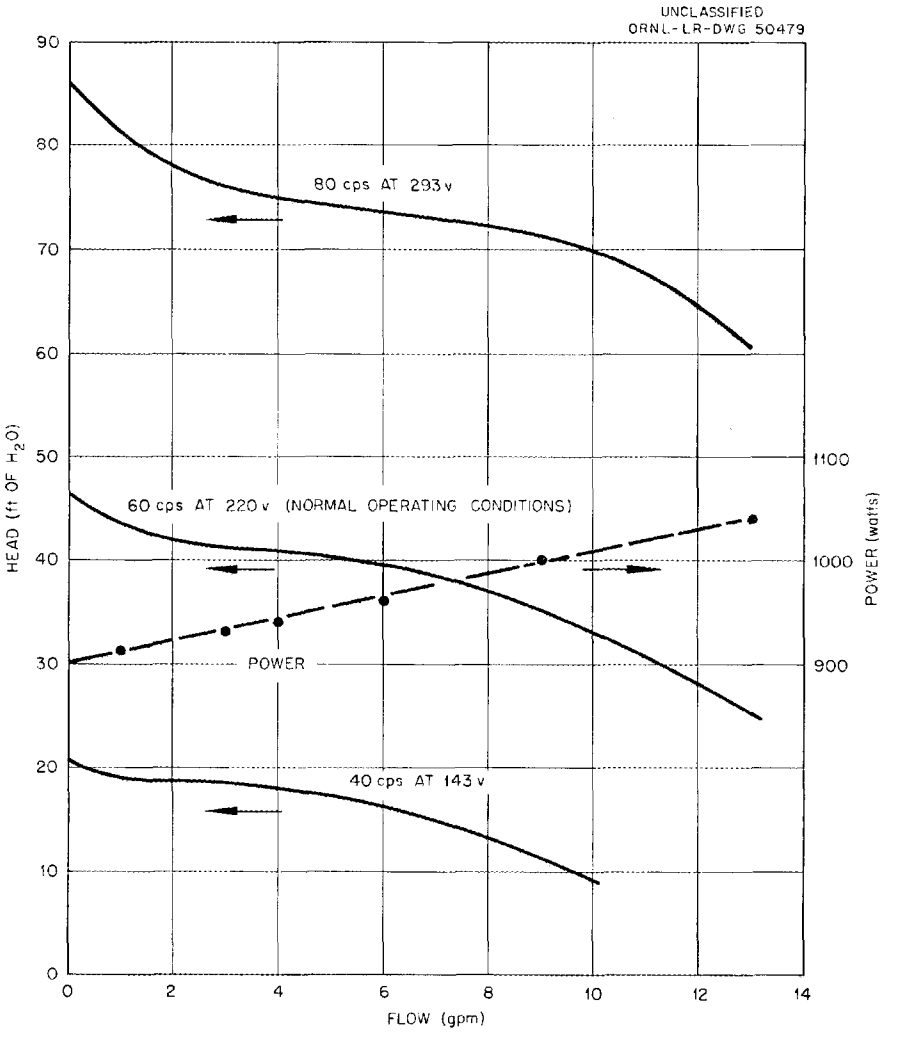

Fig. 10. Performance Curves of In-Pile Loop Pump with Three-Phase, 220-v Stator for Power Supply Frequencies of 40, 60, and 80 cps.

All parts of the pump exposed to the circulating fluid are fabricated of type 347 stainless steel with the exception of the pump bearings. However, one pump was fabricated entirely of titanium for use in the titanium loop mentioned above. The pump bearings operate in and are lubricated by the process fluid; however, the fluid within the pump rotor cavity is maintained at a temperature below 125°C to prevent excessive bearing corrosion and to prolong the life of the motor-stator windings.

In the design, emphasis is placed on simplicity since the pump is not reusable after it becomes radioactive during operation in the reactor and, in fact, often is dismantled for examination along with the rest of the loop. Pump reliability is achieved by careful fabrication and by rigid inspection and testing procedures. The cost is minimized by the use of as many standard interchangeable parts as possible and by careful design.

The pump is of single-stage construction and is approximately 6 in. in diameter and 12 in. in length. The pump stators used in the first 15 loops were designed for 110-v, 60-cycle, single-phase current, and used class A insulation; however, the stator design was changed as a result of several failures due to electrical short-circuits in the stator windings. The present pump stator is designed for three-phase, 220-v, 60-cycle power[3] and uses class H insulation.

The pump bearings and journal bushings are of the sleeve type and are fabricated of pure sintered aluminum oxide.[4] Several bearing-journal combinations--Graphitar-14 bearings and Stellite-98M2 or 17-4 PH stainless steel journals--were tried and were operated in loops before sintered aluminum oxide was selected. This chemically inert material has performed excellently in this application, and "outboard" bearings of this material are now being used; that is, a bearing is placed on each side of the rotor body. Outboard bearings provide good weight distribution over the bearing surfaces, make dynamic balancing of the rotor comparatively easy, and provide integral thrust-bearing surfaces in both the forward and rearward directions.

The solution in the pump rotor and bearing region and the stator windings are cooled by circulating water through a cooling jacket on the pump and cooling coils clamped in slots in the stator. Transfer of heat from the hot end of the pump to the pump rotor cavity is minimized by a thermal barrier. An air gap in the thermal barrier reduces transfer of heat by conduction, and the close fit of the thermal barrier within the pump housing and around the rotor shaft prevents excessive transfer of the hot (to 300°C) solution from the impeller region to the cooler (~125°C) solution in the rotor and bearing region.

3.3.3 Loop Heater

The loop temperature is maintained and controlled by means of an assembly of Calrod-type electric heaters cast in an aluminum matrix around a part of the main loop piping. Two different loop heater designs have been used. The heater for loops operated in the LITR consists of four 750-w elements (3000 w total) equally spaced around the circumference of the piping; the loop cooler (discussed below) is fabricated as a separate unit.

For the ORR loop, a cooler and a heater of higher capacity than used in the LITR loop were required. The loop heater must have the capability of overriding the loop cooler in order to maintain loop temperature in the event of a reactor shutdown. Increased cooling was required in the ORR loop because of the higher slow-neutron flux and thus a higher fuel fission-heat load and increased gamma heating of the metal wall of the loop core from reactor radiation. For the ORR loop the heater and cooler were combined into a single unit. This was done for two reasons: (1) to allow maximum utilization of the limited loop area available for heating and cooling and (2) to provide close coupling of these units, which allows more rapid response to changes in loop heat load. The combined unit is fabricated by casting the Calrod-type elements and the cooling coil in an aluminum matrix around the main loop piping as shown in Fig. 11. Each unit is 28 in. long and contains four 1000-w elements. Two of these units were incorporated in the ORR loop for a total loop heating capacity of 8000 w.

[3]A. Weitzberg and H. C. Savage, Performance Test of 220-v Three-Phase Stator for Use with 5-gpm In-Pile Loop Pump, ORNL CF-10-24-57 (Oct. 4, 1957).
[4]H. C. Savage, Sintered Alumina as a Pump Bearing and Journal Material, ORNL CF-57-11-122 (Nov. 26, 1957).

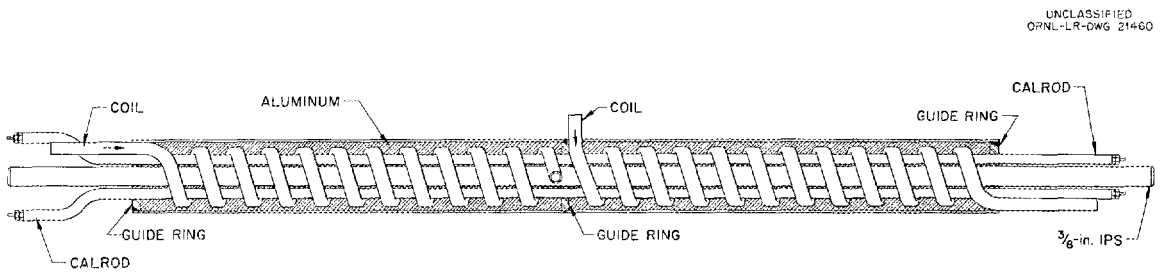

Fig. 11. Heater-Cooler for ORR Loop.

3.3.4 Loop Cooler

A cooler in the main loop circulating stream removes the fission and gamma heat generated in the loop. The amount of heat generated is, of course, dependent upon the neutron flux and the fuel inventory in the core. Thus the loop cooler must be capable of stable and reliable operation over a wide range of heat removal capacity. In addition, the cooler must be able to adjust rapidly to a sudden change in heat load, which can occur as a result of a reactor scram.

Again, as in the case of the loop heater, two different loop cooler designs have been used. The cooler used in the initial LITR loops consisted of a metal jacket with two concentric annuli surrounding a section of the main loop piping. The outer annulus is used as the coolant flow channel, and the cooling capacity is adjusted to the requirement for each loop experiment by filling the inner annulus with materials such as cast aluminum or steel wool in order to vary the over-all heat-transfer coefficient.

The cooler in the ORR loop was combined with the loop heater (see Sec. 3.3.3) by means of a coolant flow channel of 3/8-in. tube cast in an aluminum matrix along with the loop heaters. In both designs the coolant medium is air or water or mixtures of the two, depending on the heat removal requirement. In this manner, wide variations in heat removal capacity are achieved, as indicated in Fig. 12.

The data shown in Fig. 12 were obtained with the combination heater-cooler unit described above. It can be seen that for one unit 28 in. long a heat removal capacity in excess of 7 kw can be obtained. Two units can be incorporated in a loop to provide 14 kw of cooling capacity. The capacity of the cooler can be rapidly decreased from ~7 kw to ~2 kw by merely stopping the water injection into the air-water mixture being used as the coolant medium. The loop cooler is normally used to remove an amount of heat in excess of the total fission and gamma heat being generated in the loop, and the loop heater power is controlled so that it balances this excess and controls the loop temperature. A core cooler was also used in the ORR loop as an additional aid in removing gamma heat from the core metal wall; this cooler is discussed below.

3.3.5 Core Cooler

The core cooler incorporated in the ORR loop controls the wall temperature in order to prevent boiling of fuel solution on the core wall surface and to reduce thermal stresses by removing part of the gamma heat from the external surface. It was anticipated that gamma heating of the forward portion of the core wall would be 3 to 4 w/g.

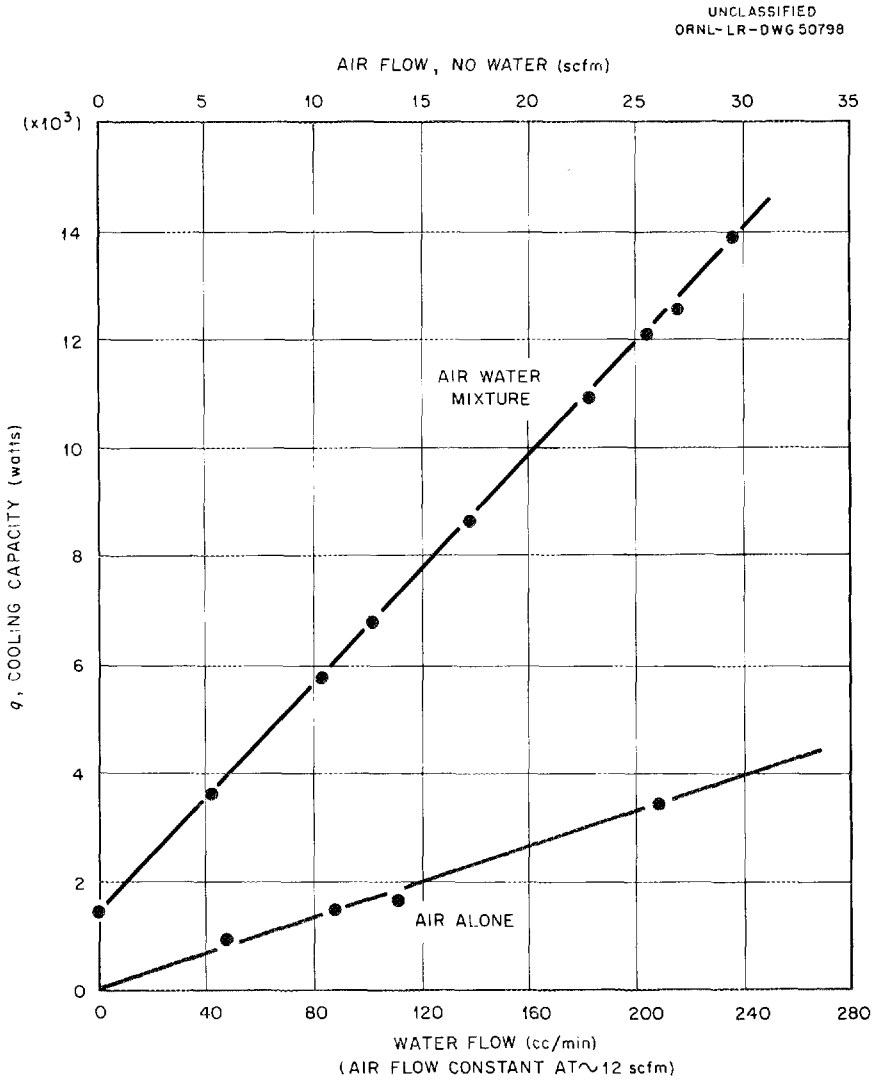

Fig. 12. Cooling Capacity of Two Heater-Cooler Units, ORR Loop.

The core cooler consists of a cooling coil (3/16-in. OD, 0.028-in. wall) of stainless steel cast in an aluminum matrix 1/4 in. thick around the core as shown in Fig. 13. As in the loop cooler, air, water, and air-water mixtures are used as coolant media to obtain a wide variation of cooling capacity and to provide for rapid reduction of the cooling rate in the event of a reactor scram. The cooler has a heat removal capacity of up to 4000 w, as shown in Fig. 14.

3.3.6 Pressurizer and Pressurizer Heaters

The pressurizer performs many functions in the in-pile loop, and its importance cannot be overemphasized. In addition to the usual pressurizer functions of providing overpressure to prevent outgassing or cavitation in the main loop stream and as a reservoir to provide expansion volume for the fuel solution

UNCLASSIFIED
PHOTO 34073

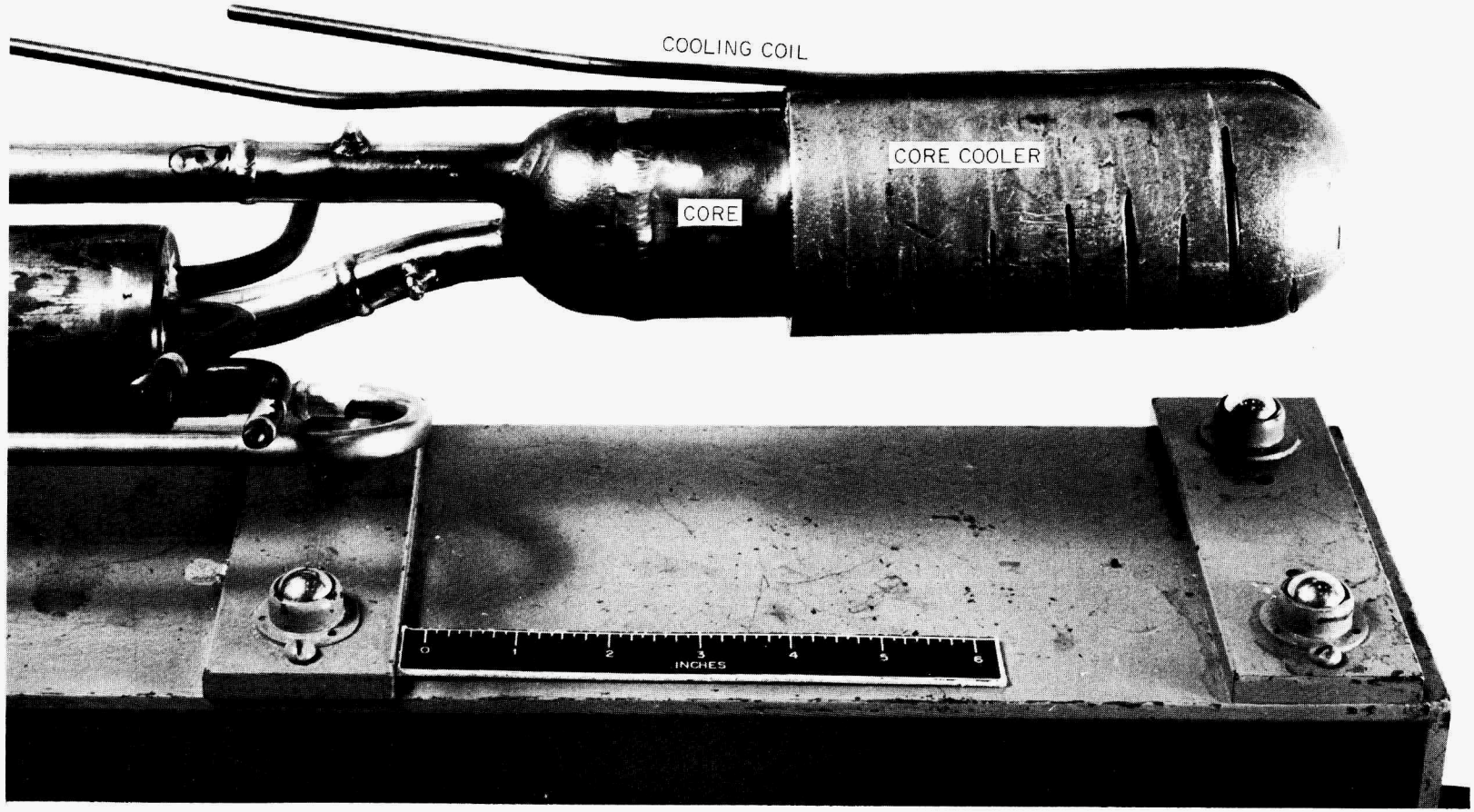

Fig. 13. In-Pile Loop Core Cooler, ORR Loop.

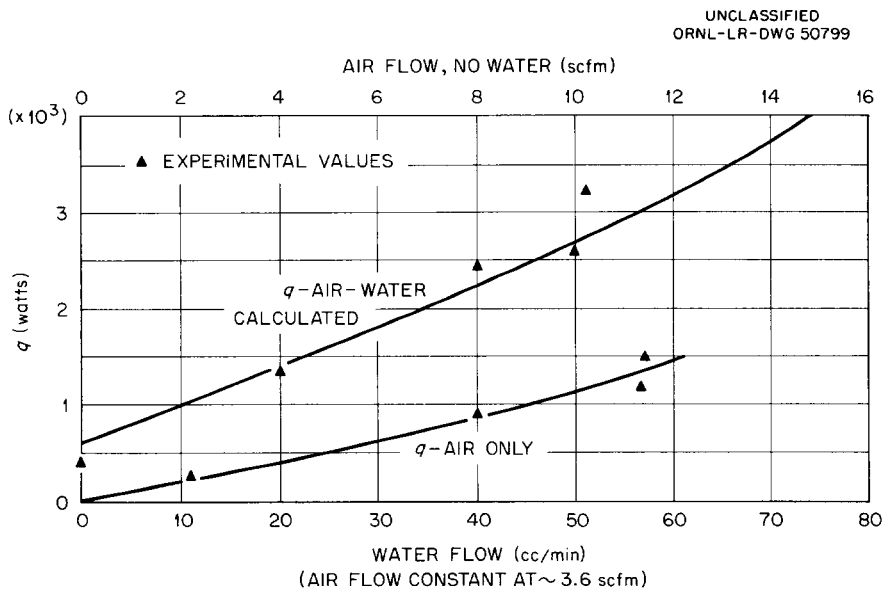

Fig. 14. Cooling Capacity of Core Cooler, ORR Loop.

when heated from room temperature to elevated temperatures, a great deal of information about, and control of, conditions within the loop are obtained from knowledge and control of the conditions within the pressurizer.

The pressurizer is constructed of 1 1/2-in. sched-80 pipe and has welded end caps. Its total length is 19 in. and its volume is 750 ml, which is about 42% of the total loop volume (1800 ml). The pressurizer is mounted in a horizontal position (refer to Fig. 6) for several reasons: (1) in order to fit the pressurizer within the dimensions of the experimental beam hole, (2) to provide maximum surface-area-to-volume ratio between the liquid and gaseous phases in the pressurizer, and (3) to keep the height of the vapor space small so as to minimize stratification of the steam, oxygen, and hydrogen in the vapor space. The large surface-area-to-volume ratio between the liquid and gaseous phase is desirable from the standpoint of maintaining equilibrium conditions between these two phases.

The pressurizer is connected to the loop at each end by means of 0.250-in.-OD, 0.150-in.-ID tubing. A small portion of the loop solution (~0.1 gpm) is routed through the pressurizer and returned to the loop main stream by means of this tubing. In this manner the concentrations of gases dissolved in the pressurizer and loop (oxygen and/or hydrogen) are in equilibrium, and knowledge of this concentration is obtained by careful measurements of the partial pressure of the gas in the pressurizer. This is discussed in more detail in Sec. 7.4.1. Two tubes of capillary dimensions are attached to the pressurizer end caps in the upper vapor space, and a thermocouple well extends into the lower, liquid space of the pressurizer.

An assembly of Calrod-type electric heaters cast in an aluminum matrix around the 1/4-in. tubing line upstream of the pressurizer is used to heat the solution in the pressurizer to a temperature above that of the solution in the loop. The heating capacity of this pressurizer heater (1500 w) is sufficient to maintain the pressurizer 30 to 40°C above the loop temperature, if desired. Steam pressurization of the system prevents gas evolution from the liquid in the

main loop circulating stream and pump cavity and also provides steam diluent for the radiolytic hydrogen and oxygen in the vapor space of the pressurizer during in-pile operation.

In addition to the pressurizer heater, the entire body of the pressurizer is surrounded by a heating jacket which is used to maintain, as nearly as possible, a uniform temperature throughout the pressurizer. Equilibrium thermal conditions in the pressurizer are important in determining the partial pressures of steam and gas from measurements of absolute pressure and temperature and to minimize stratification of the gases within the pressurizer vapor space. Usually the wall of the pressurizer is operated at a temperature a few degrees below the liquid temperature so that a small amount of steam will condense on the inside wall to prevent deposition and drying of materials such as uranyl sulfate, copper sulfate, and corrosion products which might catalyze the reaction of hydrogen and oxygen in the event of stratification and/or concentration of these gases.

3.3.7 Loop Core Section

The loop core section, that part of the loop nearest the reactor lattice, is enlarged to expose an appreciable fraction of the loop fuel solution to the highest neutron flux. In addition, the core section contains corrosion specimens (discussed below) for determination of the corrosion resistance of various materials exposed to fissioning fuel solution. To prevent localized overheating in the fuel and to remove gamma heat from the core metal wall, a uniform distribution of flow in the core is desirable; furthermore, the flow of fuel solution must be directed past the corrosion specimens in a known manner so that the effect of velocity on corrosion can be evaluated.

Two core designs have been used in the in-pile loops. The core used in the LITR loop is shown in Fig. 15. The fuel solution entering the core is directed around the corrosion-specimen assembly and then through the flow channel in which the high-velocity test specimens are located. Bulk fluid velocity in the annular space surrounding the specimen holders is 0.8 fps at 5 gpm.

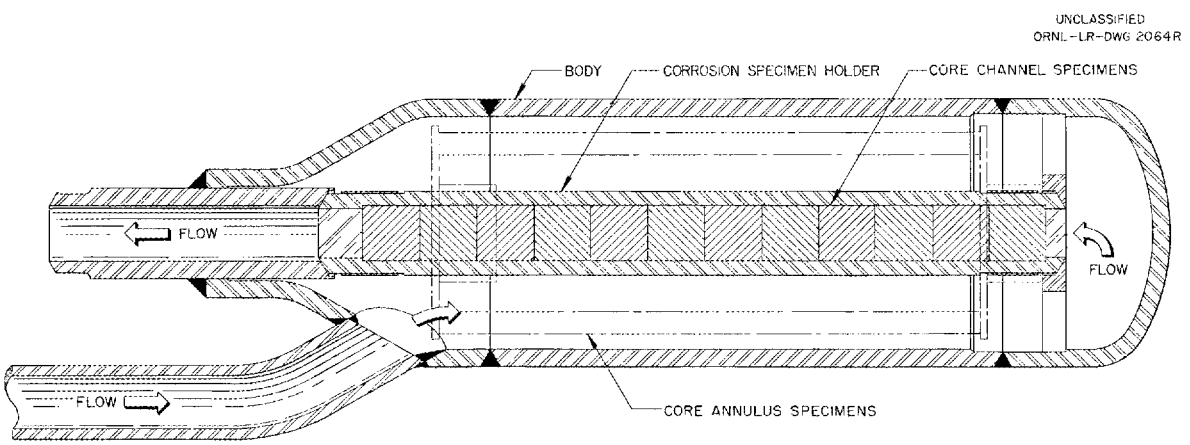

Fig. 15. Core for LITR Loop.

The second core design, used in the ORR loop, is shown in Fig. 16. The core section is divided into two chambers by means of a longitudinal baffle plate in order to increase the flow velocity in the core for improved heat transfer and

prevention of excessive metal temperatures and boiling in the core. In this design, fuel entering the core passes directly through the first of two channel-type specimen holders and is subsequently directed through the second specimen holder before leaving the core. The bulk fluid velocity in the annular space surrounding the specimen holders is 2 fps at 5 gpm. A core cooler (see Sec. 3.3.5) is also incorporated in this design.

UNCLASSIFIED
ORNL-LR-DWG 23543

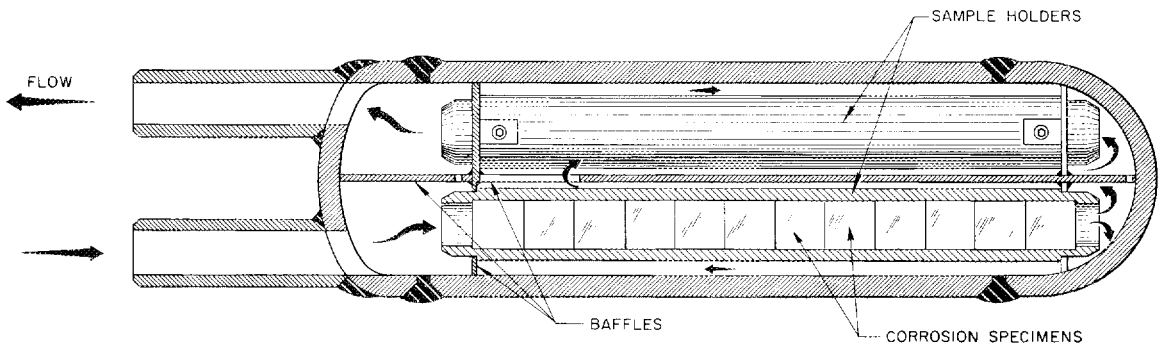

Fig. 16. Core for ORR Loop.

3.3.8 Corrosion Test Specimens

Although many different materials have been subjected to corrosion tests in in-pile loops, the greatest emphasis has been placed on evaluating the radiation-corrosion resistance of stainless steels, titanium and its alloys, and zirconium and its alloys. These materials were used in the construction of HRE-2 (Zircaloy-2 is the core-tank material, piping in the external circulation system is of type 347 stainless steel, and titanium is used in some high-turbulence regions of the circulation system external to the core). Of these materials, various types of corrosion specimens have been used; among these types are: coupon, stressed, coupled (to test for possible galvanic couple action under radiation), impact, and tensile specimens.

Each loop contains corrosion test specimens of various types in at least two locations. One set is located in the core section and thus is held in the region of highest flux and is subjected to the highest concentration of short-lived fission products. A duplicate array of specimens is situated in the circulation system removed from the high-flux region, so that a direct comparison of the corrosion resistance of the materials in and out of direct radiation can be made.

Figure 17 shows the coupon specimens and holder used in determining the effect of velocity on corrosion. Flat coupon specimens form a continuous septum down the center of the tapered channel so that the bulk-fluid flow velocity varies from 9 to 45 fps as the solution traverses the holder. In some loops holders with straight-channel flow sections are used so that there will be no velocity gradient over the coupons. The specimen holder shown in Fig. 17 is designed to contain twelve 1/2 x 1/2 x 0.060-in. coupons, but in some loops twenty-four 1/4 x 1/2 x 0.060-in. coupons have been used. The channel-type

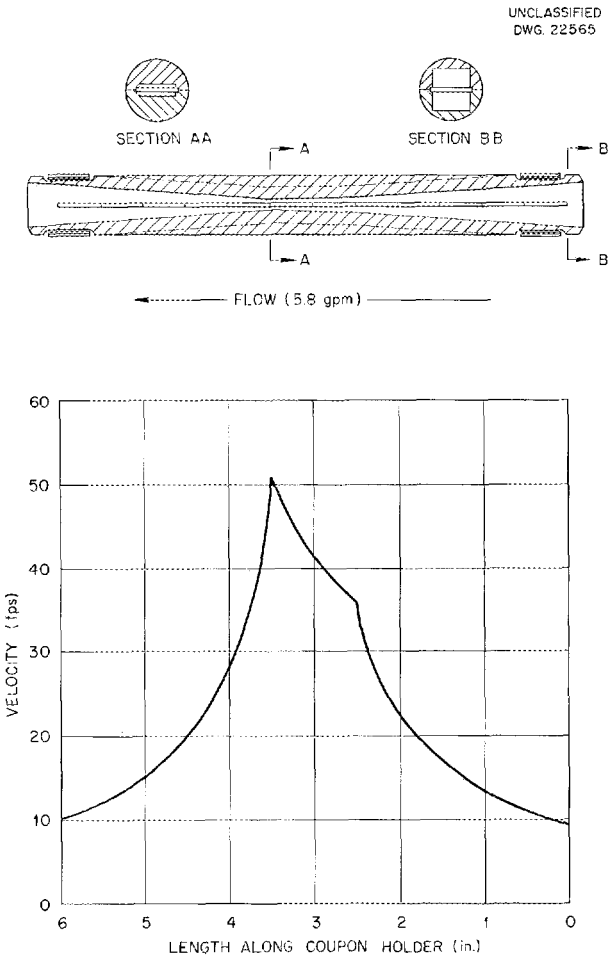

Fig. 17. Coupon Holder and Coupons with Velocity-Distribution Curve.

holders installed in the in-line and core positions of a loop are identical except that the holder in the core section has part of the outside wall machined away in order to reduce neutron absorption. Figure 18 illustrates the method used to install test specimens in the in-line position. Because of the low neutron-absorption cross section and the good corrosion resistance of Zircaloy-2, it has been favored as a construction material for the coupon holders, although some have been made of titanium and some of stainless steel.

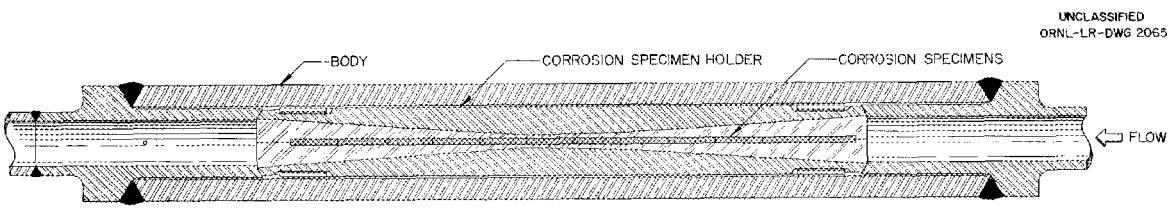

Fig. 18. In-Line Holder for Coupon Specimens.

UNCLASSIFIED
PHOTO 34254

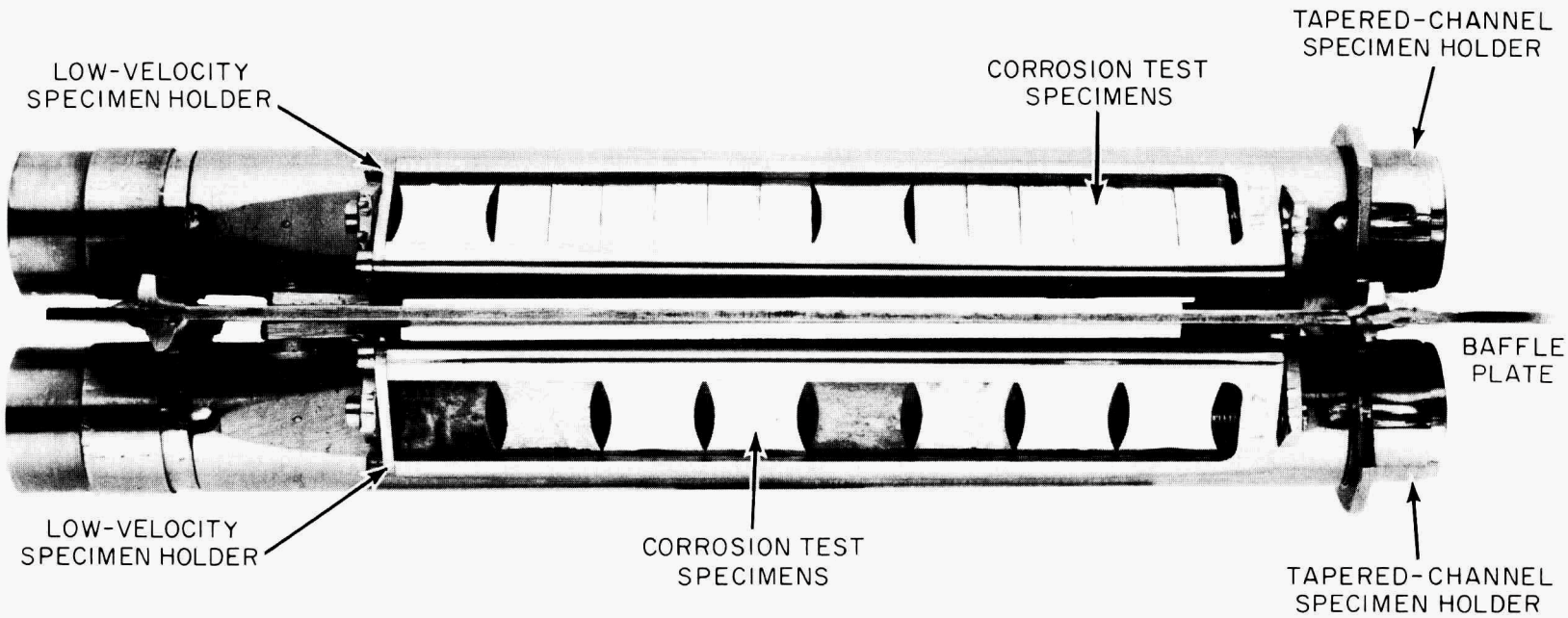

Fig. 19. Corrosion Specimen Assembly in Core Section, ORR Loop.

A second type of specimen holder, designed to contain coupon specimens, is mounted on brackets around the channel-type holder (see Fig. 19). In this location the specimens are exposed to bulk fluid velocities of either 0.8 or 2 fps, depending on the core in which they are installed, as compared with the 9- to 45-fps velocity of fluid passing the coupons in the channel-type holders.

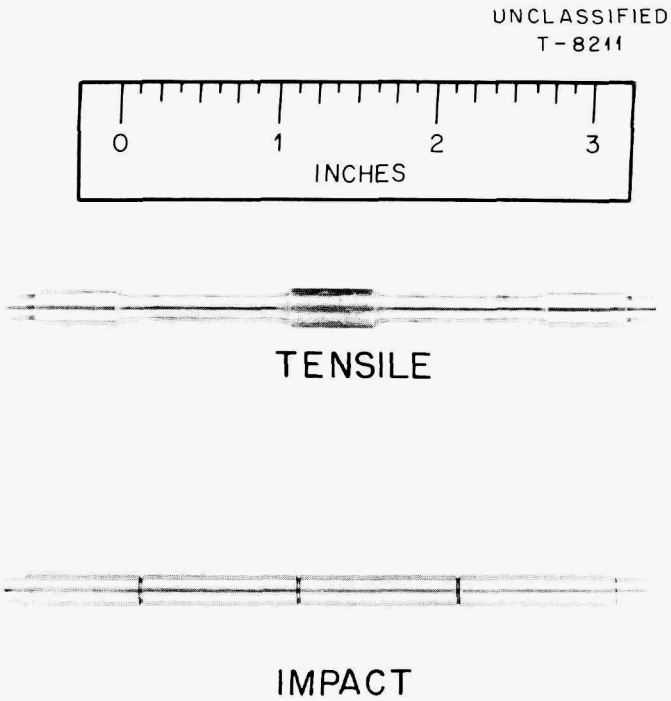

Fig. 20. Impact and Tensile Specimens.

Various impact and tensile specimens (Fig. 20), machined as required for testing after exposure to uranyl sulfate solutions, have also been installed in both the in-line and core positions along with the coupon samples. An array of impact specimens surrounding a core coupon holder is shown in Fig. 21.

Stressed and coupled specimens (Fig. 22) of various materials have been tested. Each stress-specimen assembly consists of two strips 3/8 in. wide, 3 1/2 in. long, and 0.060 in. thick stressed over a center fulcrum. Coupled-specimen assemblies have been included as tests of the possibility of a galvanic couple effect under irradiation.

In some loops, corrosion specimens were also installed in the pressurizer. Duplicate specimens of either the stressed, coupled, or coupon type were installed in both the liquid and the vapor phases to obtain comparative data on the corrosion resistance of materials in those environments.

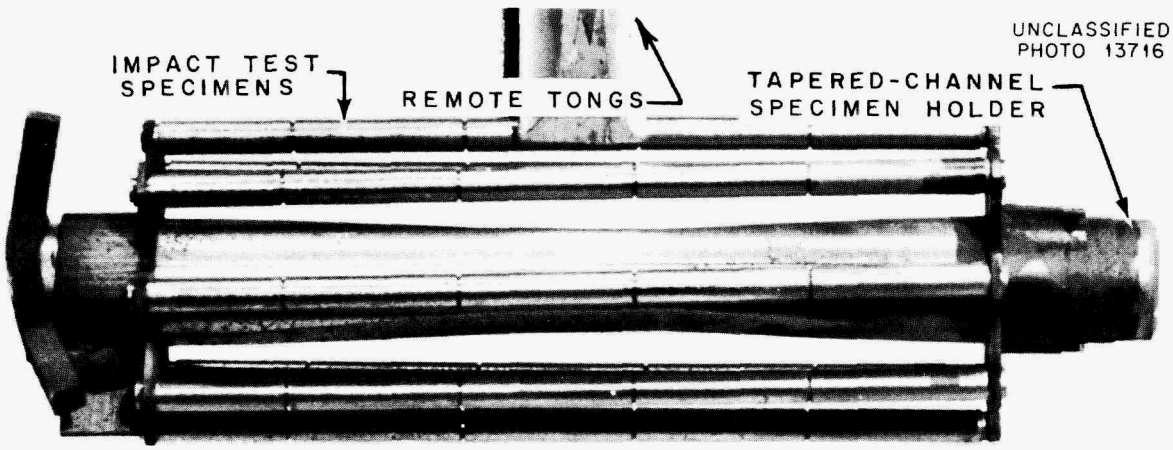

Fig. 21. Array of Impact Specimens Surrounding a Core Coupon Holder. Photograph Taken in Hot Cell After Removal from the Loop.

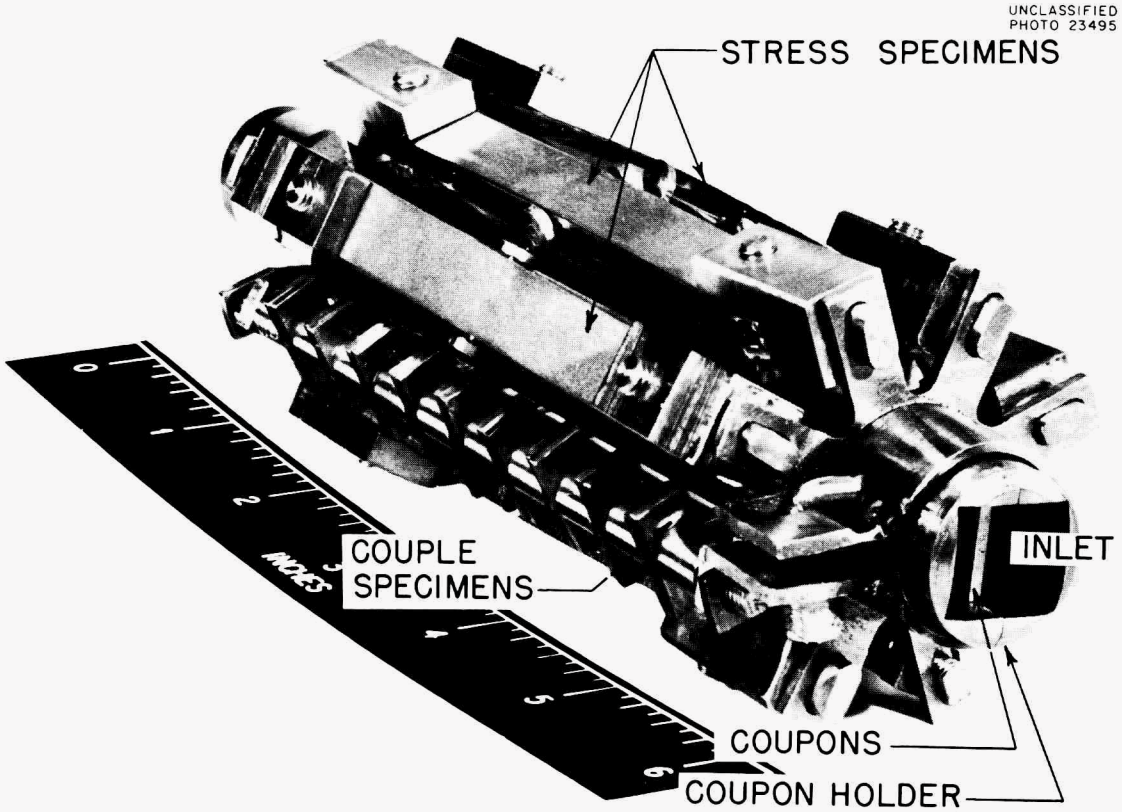

Fig. 22. Stressed- and Coupled-Specimen Assemblies, LITR Loop.

4. AUXILIARY EQUIPMENT

In order to ensure the safety of operating personnel, to minimize the possibility of damage to the reactor facility, and to provide maximum flexibility of in-pile operation of the loops, various auxiliary equipment items were designed and installed at each beam-hole facility. Most of this equipment is installed on a permanent basis, although some is associated with the "loop package" and is replaced or, where possible, is re-used on subsequent loops.

When circulating in-pile a fuel solution containing enriched uranium, the loop is in effect a small-scale aqueous homogeneous reactor. The problems of absolute containment of the fuel solution at elevated temperature and pressure, sampling of the fuel solution, additions of makeup fuel, oxygen addition to replace that consumed in the corrosion process, and draining the fuel solution and rinsing the loop following in-pile operation are similar to those encountered in an aqueous homogeneous reactor. All operations must be performed remotely and with adequate radiation shielding, with very little, if any, maintenance of the loop and its associated auxiliary equipment during operation. A schematic diagram and flowsheet of the ORR in-pile loop facility is shown in Fig. 23.

Most of the auxiliary equipment is contained in two equipment chambers located at the face of the reactor shield, photographs of which are shown in Figs. 24 and 25. These two chambers, identified as the large and small equipment

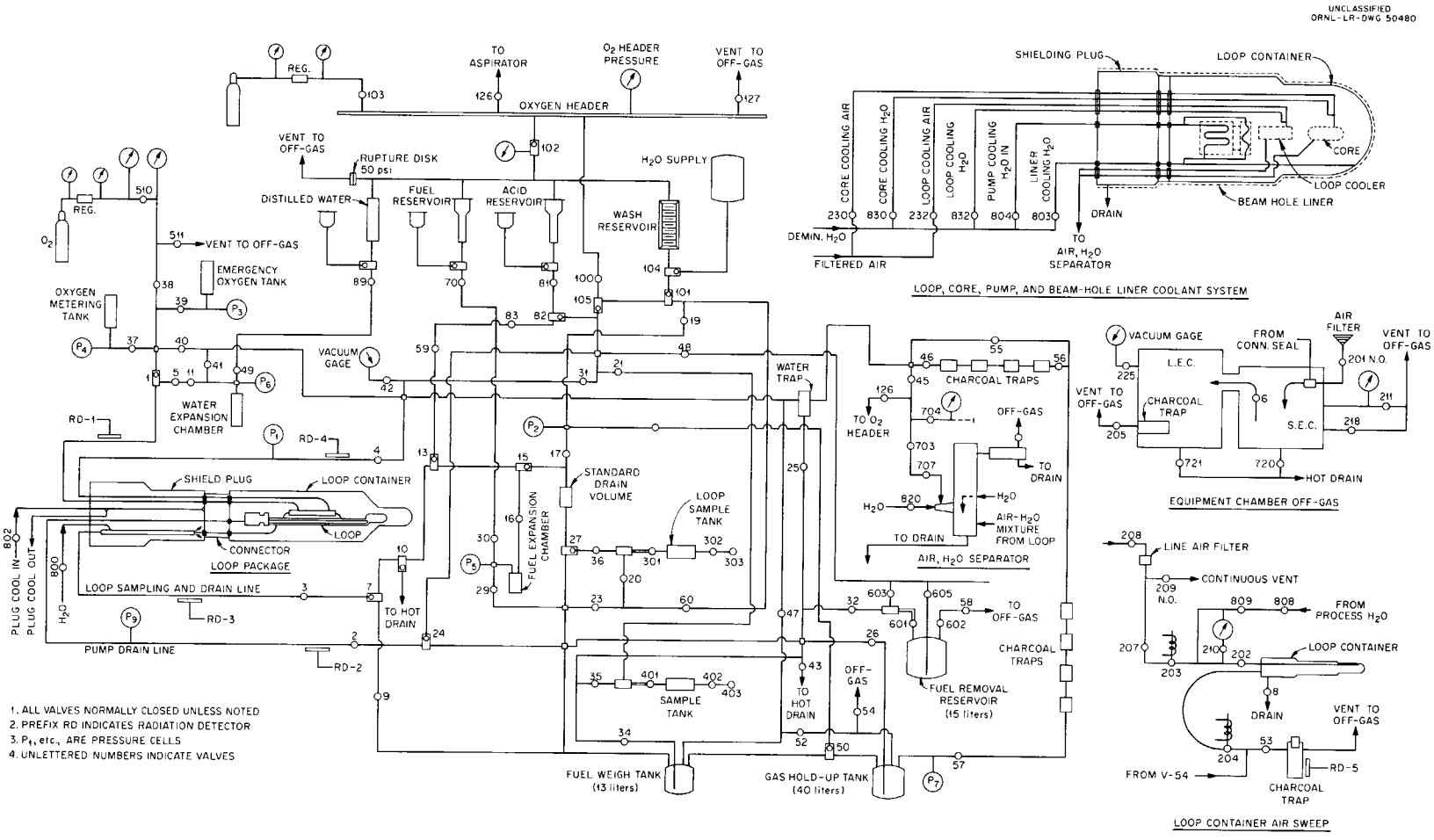

Fig. 23. Flowsheet of the ORR In-Pile Loop Facility.

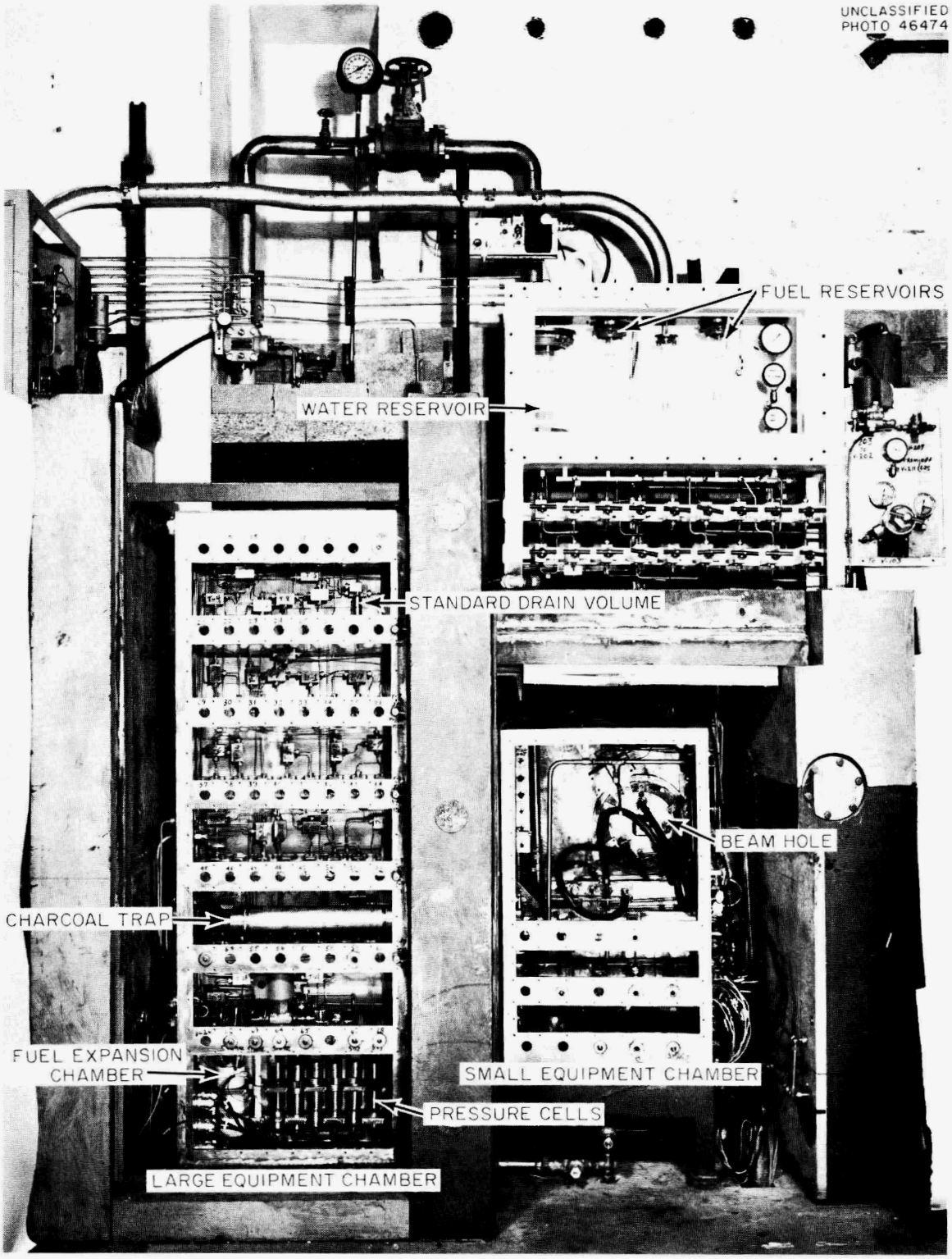

Fig. 24. Equipment Chambers with Cover Plates and Shielding Removed, ORR Loop.

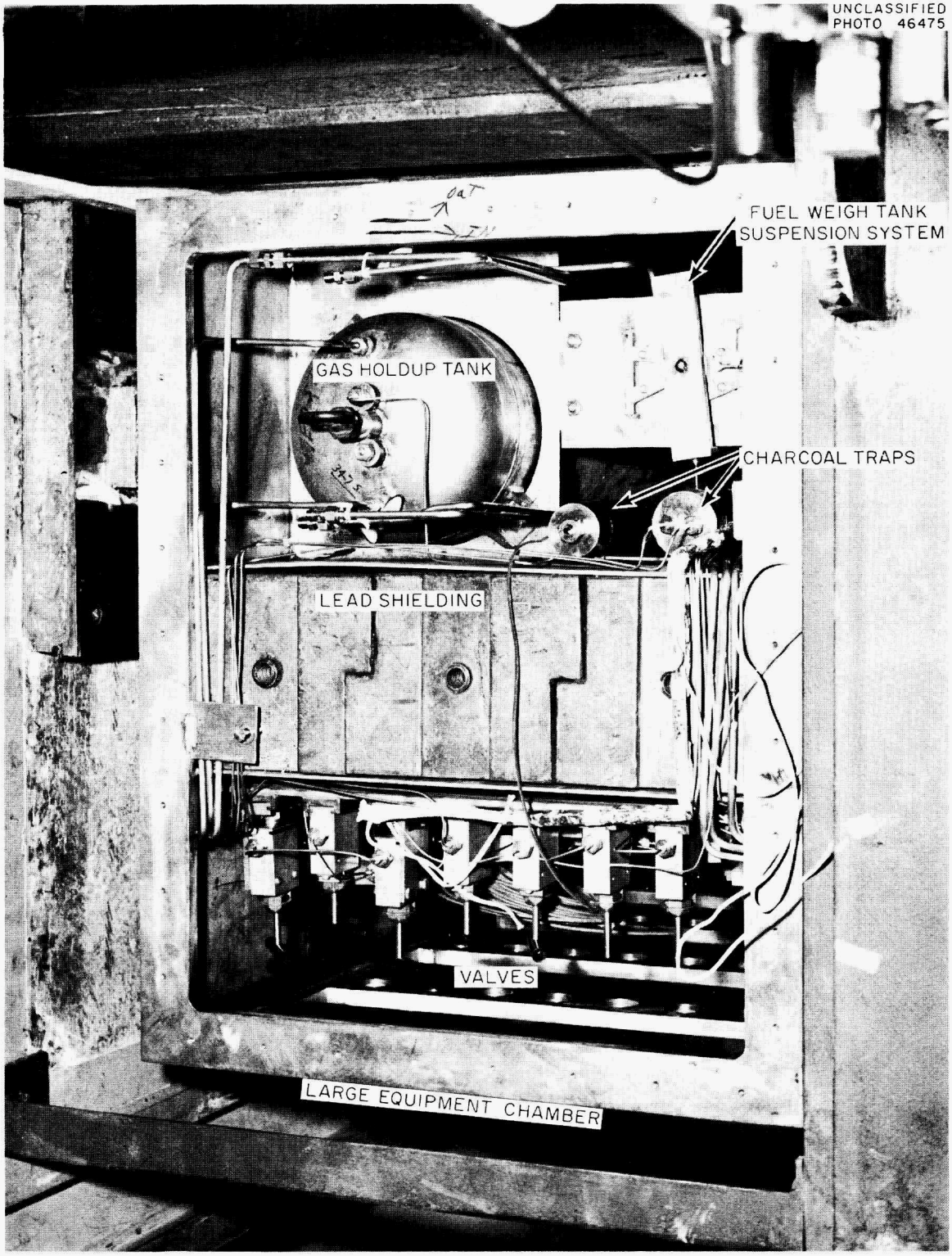

Fig. 25. Top View of Large Equipment Chamber with Cover Removed, ORR Loop.

chambers, are interconnected. Both chambers are enclosed and sealed with gasketed steel plates, are maintained at subatmospheric pressure, and are continuously flushed with air which is exhausted to the reactor off-gas system. Lead shielding surrounds the chambers for protection of personnel against radiation. Among the types of equipment included in the chambers are tanks to store the fuel and the fission-product gases removed from the loop, fuel and gas addition systems, fuel sampling systems, pressure transducers, and interconnecting lines and valves required to perform the various operations. This equipment, as well as the equipment associated with the loop package, is discussed below.

4.1 Fuel Containment

Absolute containment of the highly radioactive fuel solution was a primary consideration in the design and fabrication of the loop and associated equipment. All operating procedures are designed to prevent the accidental uncontrolled release of radioactive material. The loop itself is the primary containment vessel, and its leak-tightness initially is assured by careful and extensive acceptance tests during the fabrication. In the event of a leak or break in the loop while operating in-pile, containment of the fuel is further assured by additional containment vessels.

4.1.1 Loop Container

In order to contain the fuel solution in the event of a loop leak or rupture, the loop is enclosed in a 1/8-in.-thick stainless steel jacket as shown in Fig. 26. The container volume is approximately 35 liters. Based on the

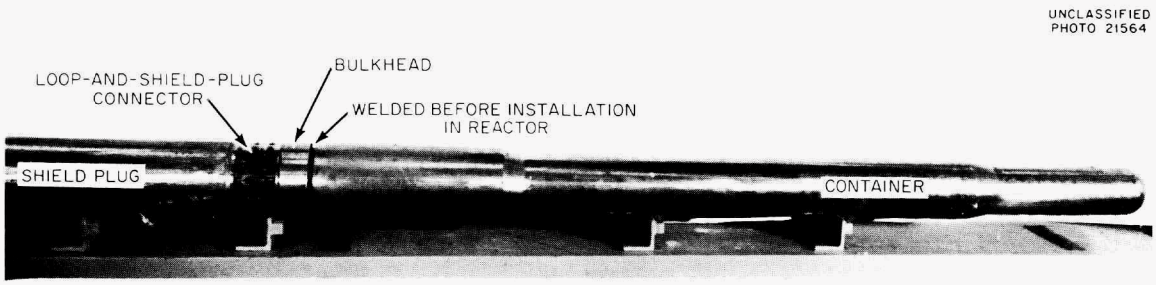

Fig. 26. LITR In-Pile Loop Package with Container Jacket in Place.

assumption that a massive rupture would release the entire loop contents into the container while operating at 295°C, and assuming no heat loss, the maximum pressure expected in the container would be 267 psia at 203°C. This would rapidly decrease as a result of cooling and condensation of the liquid vapor, leaving a negligible pressure (less than 20 psig) of noncondensables. Calculations based on the Unfired Pressure Vessel Code give an allowable internal pressure in the container in the order of 400 psi; thus the loop container design is adequate in this respect.

The charcoal trap and radiation detector shown in the loop-container sweep gas in Fig. 23 is not used to contain fission-product gas but is used as a sensitive measure of radioactivity resulting from a loop leak. Any fission-product gas absorbed from the sweep gas is monitored, and an indication of activity closes the sweep-gas solenoid valves to contain the leak within the loop container.

4.1.2 Container Bulkhead

The thermocouple leads, electrical leads, capillary tubing, and cooling-water tubing necessary for loop operation penetrate the loop container through a bulkhead located at the rear of the loop. All penetrations through this bulkhead are made leak-tight. The design of the bulkhead and the various types of seals used are shown in Fig. 27, and the completed bulkhead is shown in Fig. 28. This bulkhead forms a part of, and is welded to, the main body of the loop container.

4.1.3 Beam-Hole Liner

In order to prevent mechanical damage to, or contamination of, the experimental beam holes in which the loops are operated, a liner is installed in each beam hole. Each liner is made of stainless steel approximately 1/8 in. thick and is sized for a close fit within the beam hole. The liner is attached to the small equipment chamber at the face of the reactor and extends into the beam hole to a point close to the reactor lattice. The beam-hole liner is a permanent part of the in-pile loop facility. Since the loop package, which consists of the loop in its container and the radiation shield plug (discussed below), is designed to fit very closely within the dimensions of the beam-hole liner, a duplicate liner for each beam hole is used in out-of-pile test procedures to ensure that the loop package will fit within the experimental beam-hole liner.

The beam-hole liner and the loop container are cooled by circulation of water in the annular space (~1/8 in. thick) between the two. Cooling is necessary to prevent overheating of the containers as well as the parts of the reactor structure and shielding close to the loop by gamma heat generated in the metal containers and heat radiated from the loop.

4.2 Shield Plug

A radiation shield plug approximately 5 ft long is incorporated in each loop package and is inserted in the beam hole along with the loop. This plug, which consists of lead, paraffin, and water encased in stainless steel, extends from the back of the loop to the face of the reactor and is visible in Fig. 26. Since all service lines to the loop must pass through the plug, a number of passageways are obtained by incorporating tubing from end to end; the tubing is spiraled through an angle of 90° to prevent radiation leakage.

4.3 Loop and Shield-Plug Connector

The loop and shield plug are joined into one rigid assembly by means of a special connector (see Fig. 29). The connector is fabricated in two halves designed to couple and lock after one half of the connector is bolted to the shield plug and the other to the bulkhead of the loop container. All service lines pass through the connector, which is specially designed so that the service lines (thermocouple leads, electrical wires, capillary tubes, and cooling-water lines) may be easily cut when the loop is removed from the reactor. The capillary tubing can be pinched off in two places and cut between the pinched areas on removal. To protect the thermocouple and electrical leads from the cooling water in the annular space between the loop package and beam-hole liner, a thin, leak-tight brass membrane is used to cover the connector. It contains a "rip cord" for easy removal when the loop is removed from the reactor.

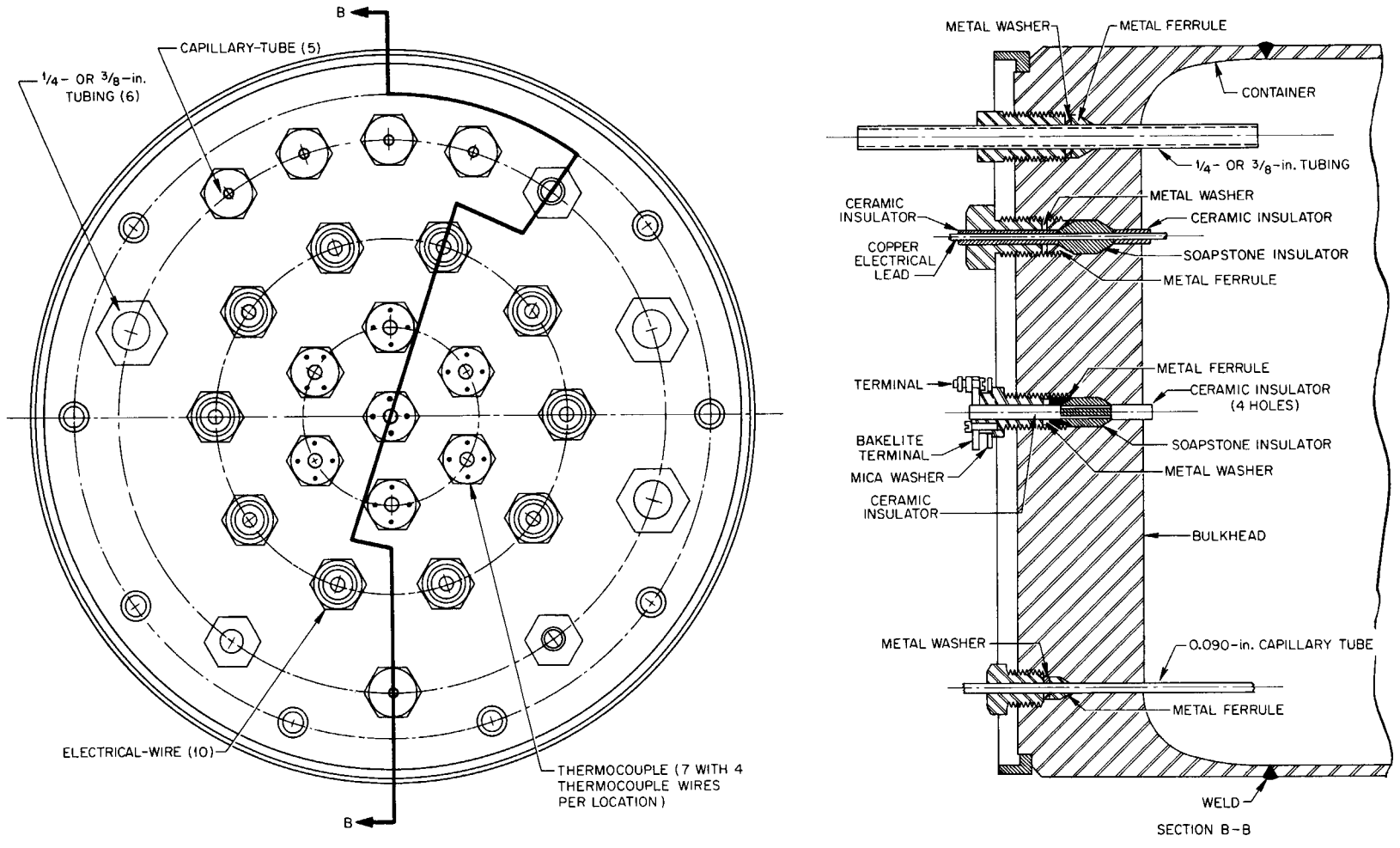

Fig. 27. Loop-Container Bulkhead Showing Details of Thermocouple, Electrical, and Tubing Penetrations.

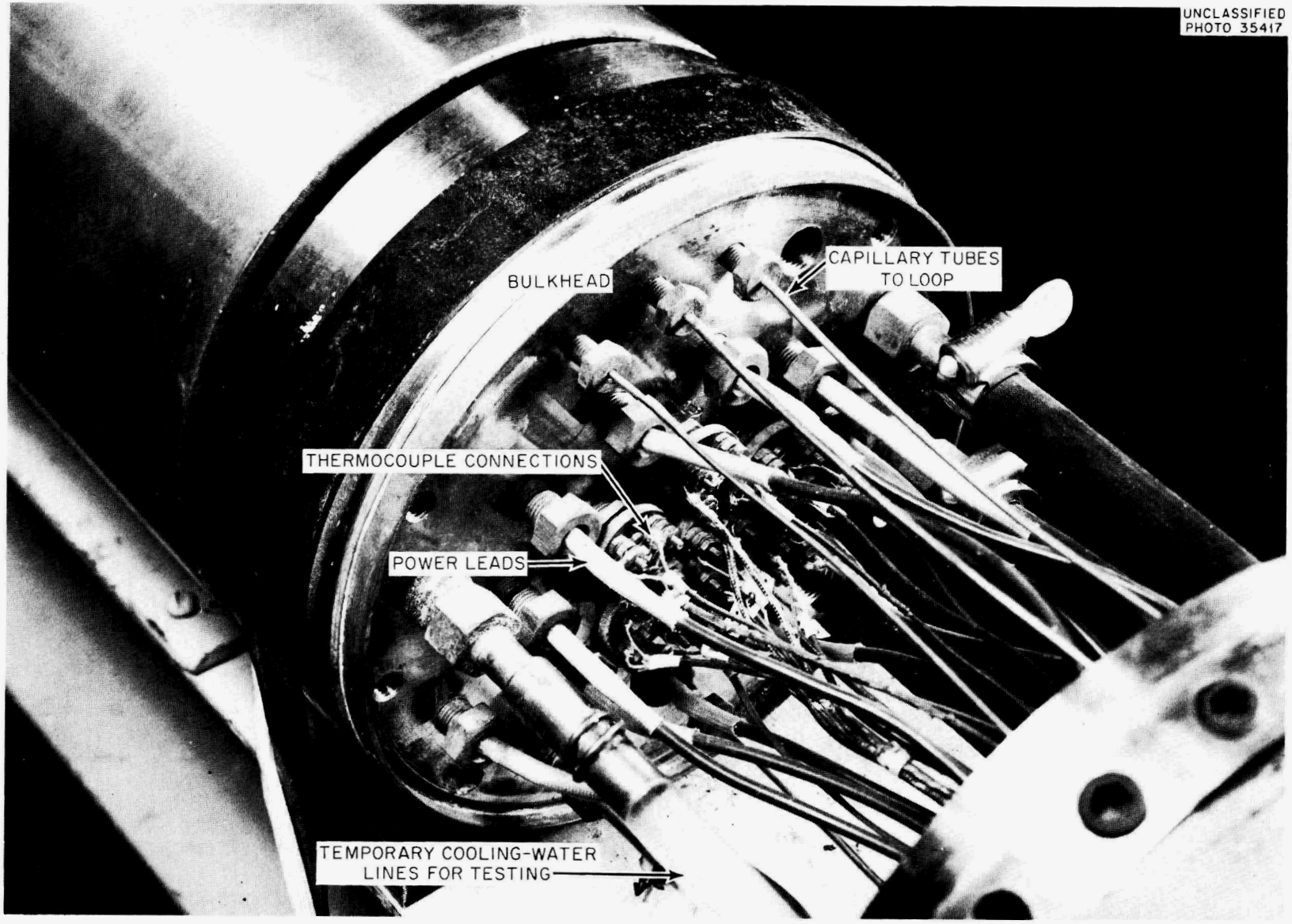

Fig. 28. Loop-Container Bulkhead.

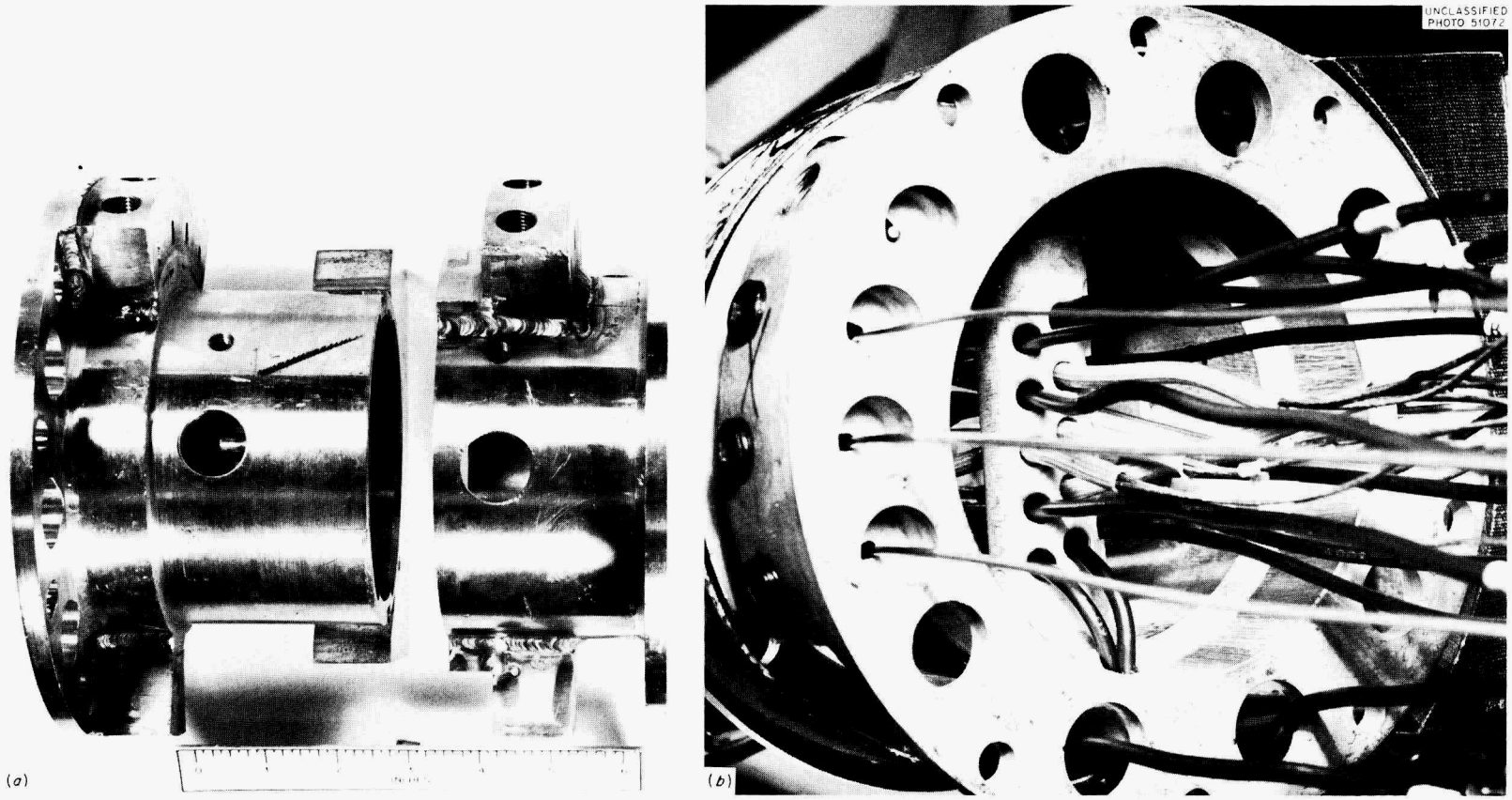

Fig. 29. Loop-and-Shield-Plug Connector: Connector Halves and View Showing Service Lines Through Connector.

4.4 Valves and Tubing

As mentioned previously, four capillary tubes connected to the loop terminate at the face of the reactor in the small equipment chamber, and five valves, located at this point, are used to make all the withdrawals from, and additions to, the loop while it is operating in-pile. By referring to the schematic diagram (Fig. 23), it can be noted that these five valves are interconnected with the various pieces of auxiliary equipment by means of capillary tubing and other valves. Capillary tubing (0.050-in. ID) is used throughout to minimize holdup of solution external to the loop.

Up to 75 high-pressure valves are required to perform the various operations. Some of the valves are exposed to fuel solution, some to water, and some to dry gas. They are needle valves rated for 30,000-psi service and have type 304 stainless steel bodies and integral seats. Different materials for the valve stems, such as hardened type 420 stainless steel, 17-4 PH stainless steel, and Stellite-6, have been used successfully. In addition, valve stems of the "rotating" and "nonrotating" design have been used. The valves currently in use, and which have given the best service, are those with type 304 stainless steel bodies and integral seats and with a partially hardened type 17-4 PH stainless steel* stem of the nonrotating design. A photograph of an assembled valve (sectioned to show its construction) and its components is shown in Fig. 30. The valves are located inside the equipment chambers and are operated by means of extension handles which pass through the equipment-chamber wall. Figure 31 shows the design of the coupling between the valves and extension handles and the method of sealing the penetrations through the chamber wall.

4.5 Fuel Storage and Weigh Tank

A 12-liter stainless steel tank of "ever-safe" dimensions is mounted permanently in the large equipment chamber at the face of the reactor in each of the in-pile loop facilities. All fuel solution drained or removed from the loop during in-pile operation, except samples for analyses, is stored in this tank. The tank is suspended from a remotely indicating weigh system so that the quantity of fuel solution it contains is known at all times and may be compared with the quantity calculated to have been withdrawn from the loop.

A sampling station is provided so that the contents of the fuel storage tank may be sampled for chemical analysis as desired, and tubing and valves in the equipment chamber allow transfer of the solution from the storage tank, after appropriate decay periods, to a shielded external removal tank in which it is sent to a processing plant for uranium recovery.

4.6 Gas Storage and Holdup Tank

Several routine loop operations (e.g., fuel sampling and loop draining and flushing) involve the handling, holdup, and subsequent release of fission-product gas. Most of this radioactive gas is vented to and held up in a gas storage and holdup tank, which is mounted permanently in the large equipment chamber. This

---

* 17-4 PH is a precipitation-hardening stainless steel. The partially hardened condition (H-1000) is used because of its corrosion resistance and hardness (Rockwell C-35) along with moderate ductility (elongation of 2 in., 14%), which is achieved by heat treatment at 1000°F for 4 hr followed by air-cooling.

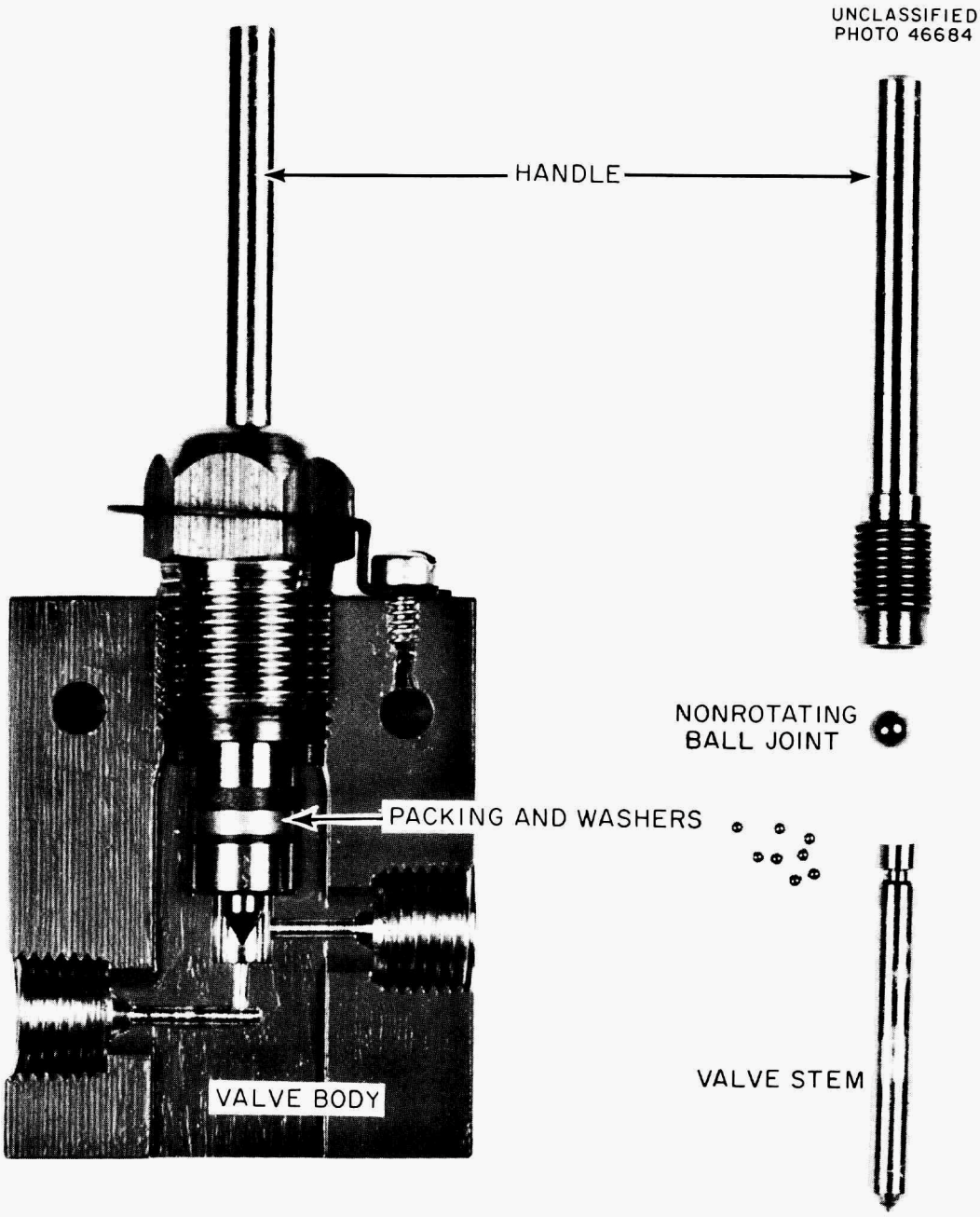

Fig. 30. Valves Used in ORR In-Pile Loop Facility, Nonrotating-Stem Type.

tank is fabricated of stainless steel and has a volume of about 40 liters. A remotely indicating strain-gage pressure cell monitors the pressure in the tank; the tank can be vented, if required, to the reactor off-gas system. If its activity has decayed sufficiently, the gas may be vented directly to the reactor stack; however, in the event of excessive activity, the gas may be vented through charcoal traps for adsorption and an additional decay period.

UNCLASSIFIED
ORNL-LR-DWG 50482

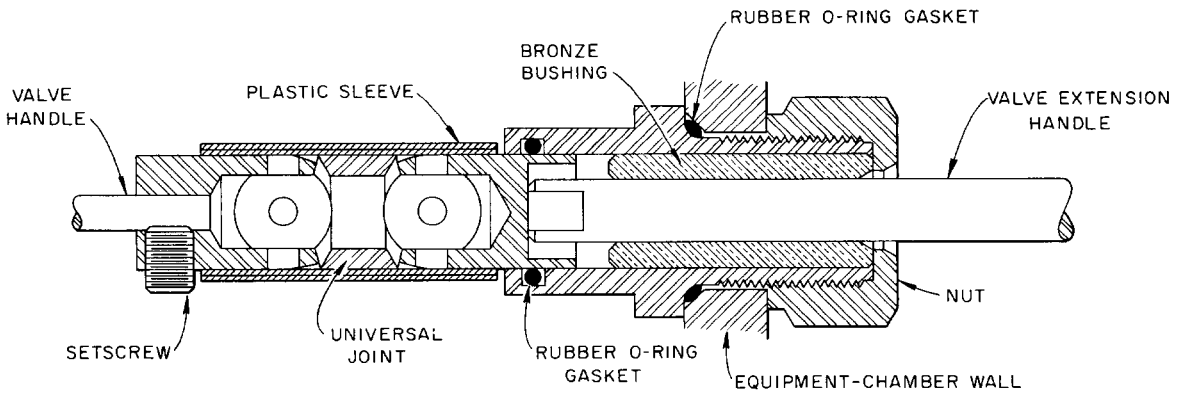

Fig. 31. Valve-Handle Penetration and Seal Through Equipment-Chamber Wall.

4.7 Fuel Sampling Equipment

During operation of a loop in-pile, samples of the circulating fuel solution are withdrawn routinely for chemical analyses. The samples are available in determining the effect of fissioning and reactor radiation on the chemical stability of the fuel solution, which contains uranyl sulfate, copper sulfate (as a radiolytic-gas recombination catalyst), and excess acid (for chemical stability). Further, the concentration of various soluble products from the corrosion of the stainless steel loop and the concentration of fission products can be determined. Based on these determinations, appropriate adjustments in the chemical composition of the fuel can be made if required, and some generalized corrosion information can be calculated.

Since the fuel solution is highly radioactive, the sampling operation must be performed remotely. The quantity of fuel removed in sampling must be known so that subsequent fuel additions can be made to maintain the solution inventory in the loop. The equipment (described in the following sections) required to remove samples from the loop is located in the small and large equipment chambers. The sampling procedure is described in some detail in Sec. 7.4.8.

4.7.1 Standard Drain Volume

A small (3- to 6-ml) tank of known volume is mounted in the large equipment chamber and is identified as the "standard drain volume." This tank is connected by means of capillary tubing and valves directly to the loop main stream, and, since it is opened directly to the loop, it is designed to withstand the maximum anticipated loop pressure (2000 psi). Except in the case of a complete loop drain, all solution removals from the loop are performed in a batch-wise fashion by filling and draining of the "standard drain volume" so that the quantity of solution removed can be calculated. Its contents are routed either to the fuel storage tank in the equipment chamber or to the sample tank, mounted outside the equipment chamber, in which the sample is transferred to the chemical laboratory for analysis.

UNCLASSIFIED
PHOTO 49526

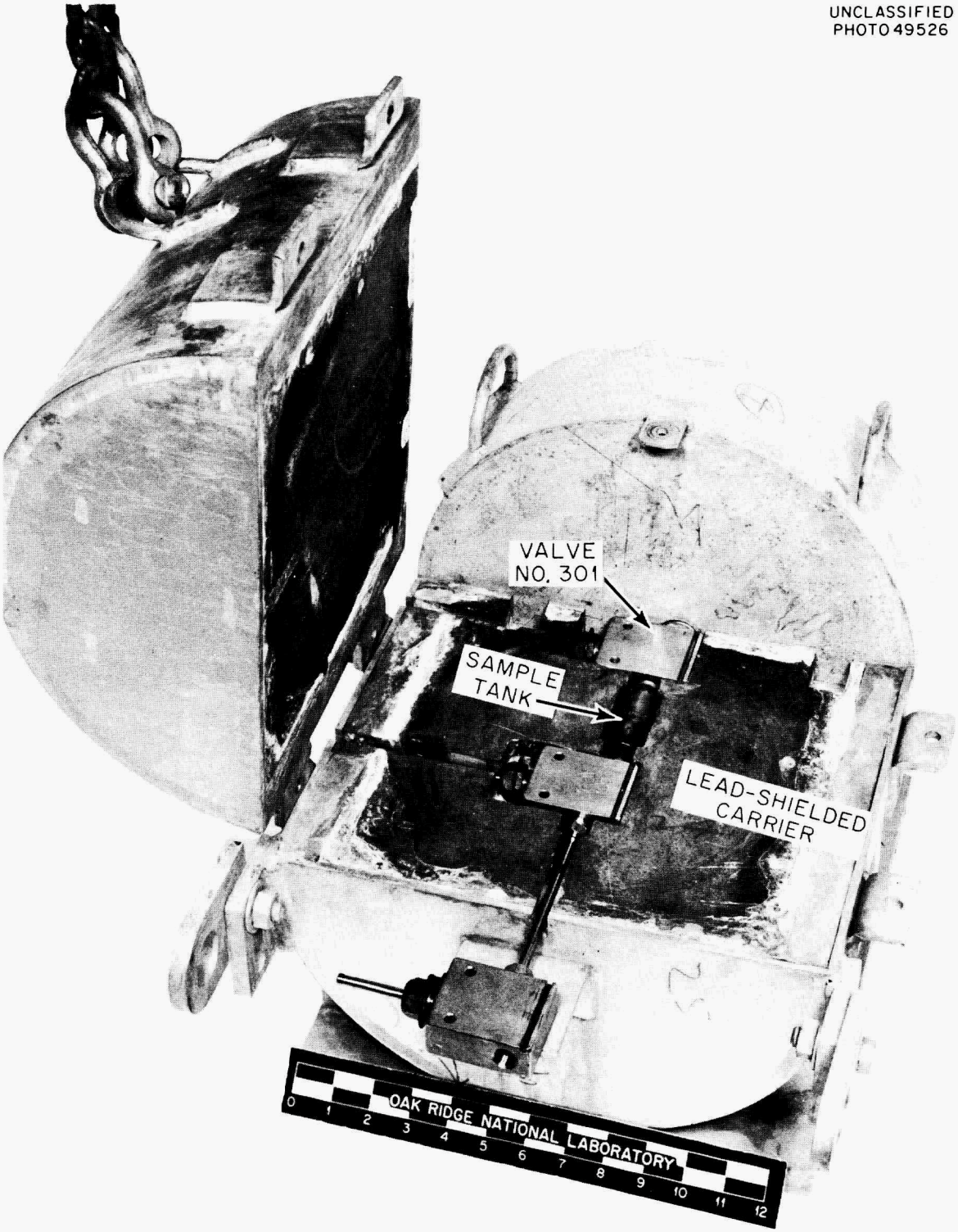

Fig. 32. Fuel Sample Tank and Carrier.

4.7.2 Sample Tank and Shielded Carrier

A sample container with valved openings at each end, whose volume is slightly larger than that of the standard drain tank, is used to contain the solution samples removed from the loop. This sample tank is mounted within a specially designed carrier with lead shielding to reduce radiation levels to an acceptable level. The carrier is made in two halves so that the tank can be removed for repair or replacement. Figure 32 is a photograph of the sample tank and its carrier, with the carrier opened to show the method of installation of the tank. A specially designed connector, outside the large equipment chamber, is used to connect the sample tank to the transfer line from the "standard drain volume." The connector is designed so that any radioactive fuel solution held up in the tubing external to the sample-tank valve can be flushed back into the fuel storage tank. Details of the connector are shown in Fig. 33.

UNCLASSIFIED
ORNL-LR-DWG 50483

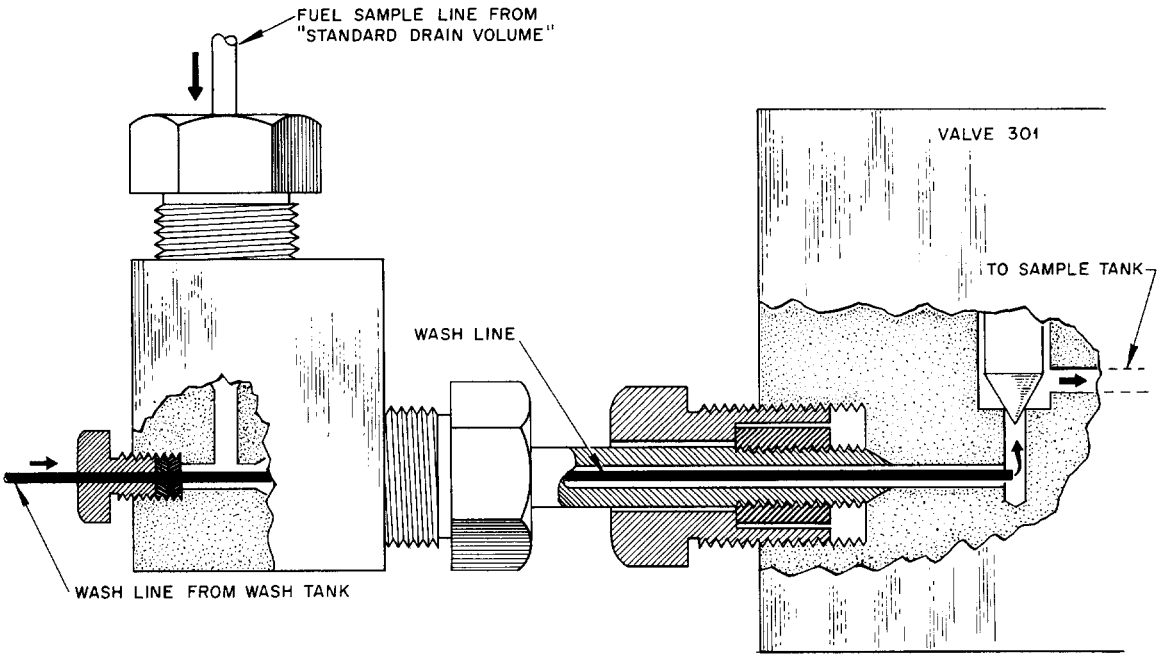

Fig. 33. Fuel Sample Tank Connector.

4.8 Fuel and Water Addition Equipment

Fuel additions to the loop operating at temperature and pressure are made by means of an expansion chamber located in the large equipment chamber. The expansion chamber consists of a stainless steel tank designed to withstand the maximum expected loop operating pressure (2000 psi). Enclosed in a combination heating and cooling jacket, the expansion chamber allows transfer of fuel to the loop by means of the thermal expansion of the aqueous solution. To add solution to the loop, the expansion chamber is completely filled with solution from a reservoir tank outside the equipment chamber and then opened to the loop through a capillary tube. It is then heated to a predetermined temperature,

depending upon the desired quantity of fuel addition. Immediately upon reaching this temperature, the chamber is closed off from the loop and cooled. When the pressure in the expansion chamber has decreased to subatmospheric, it is refilled from the external reservoir. In this manner the exact quantity of fuel expanded into the loop is measured. Some 30 to 40 ml of solution can be added to the loop in each expansion.

4.9 Gas Addition and Metering Equipment

In order to stabilize the uranyl sulfate solution and to minimize corrosion of the containment material, it is necessary to maintain oxygen gas dissolved in the fuel solution. This is accomplished by maintaining a partial pressure of oxygen in the vapor space of the pressurizer; as a result of fuel flow through the pressurizer, oxygen is transferred to the fuel solution in the loop main stream. A gas addition and metering system is provided to maintain the desired quantity of oxygen in the loop since it is necessary to replace the amount that is consumed in the corrosion process. This system consists of a stainless steel tank of approximately 200-ml volume equipped with an accurate pressure-measuring device. The tank is mounted in the large equipment chamber and is connected by means of capillary tubing and valves to the vapor space of the loop pressurizer.

The tank, whose volume is accurately known, is pressurized with oxygen gas to a pressure well above that in the loop. When the tank is opened to the pressurizer, oxygen is forced into the loop and the quantity of oxygen injected is determined from the pressure change of the metering tank.

By measuring the oxygen partial-pressure increase caused by the addition of a given quantity of oxygen gas and from a knowledge of the solubility of the gas in the fuel solution, the vapor volume and thus the liquid level in the pressurizer can be calculated. The over-all corrosion rate of the loop can also be estimated from the oxygen addition (consumption) measurements.

4.10 Charcoal Traps in Off-Gas System

Charcoal traps are installed in the ORR loop off-gas system to contain and hold up fission-product gases before discharge to the reactor stack. For reasons of economy and simplicity, a single-trap design is used (Fig. 34). Each trap

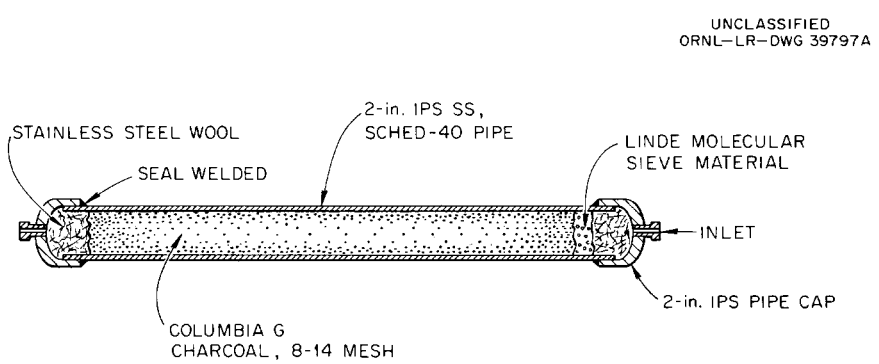

Fig. 34. "Unit" Charcoal Trap.

consists of a section of 2-in. sched-40 stainless steel pipe, 2 in. in inside diameter and 16 in. long (0.031 ft^3), and contains about 440 g of 14-18 mesh

Columbia G charcoal. Different series and parallel arrangements of the "unit" traps are used to meet the capacity and flow requirements of the various off-gas systems (Fig. 35).

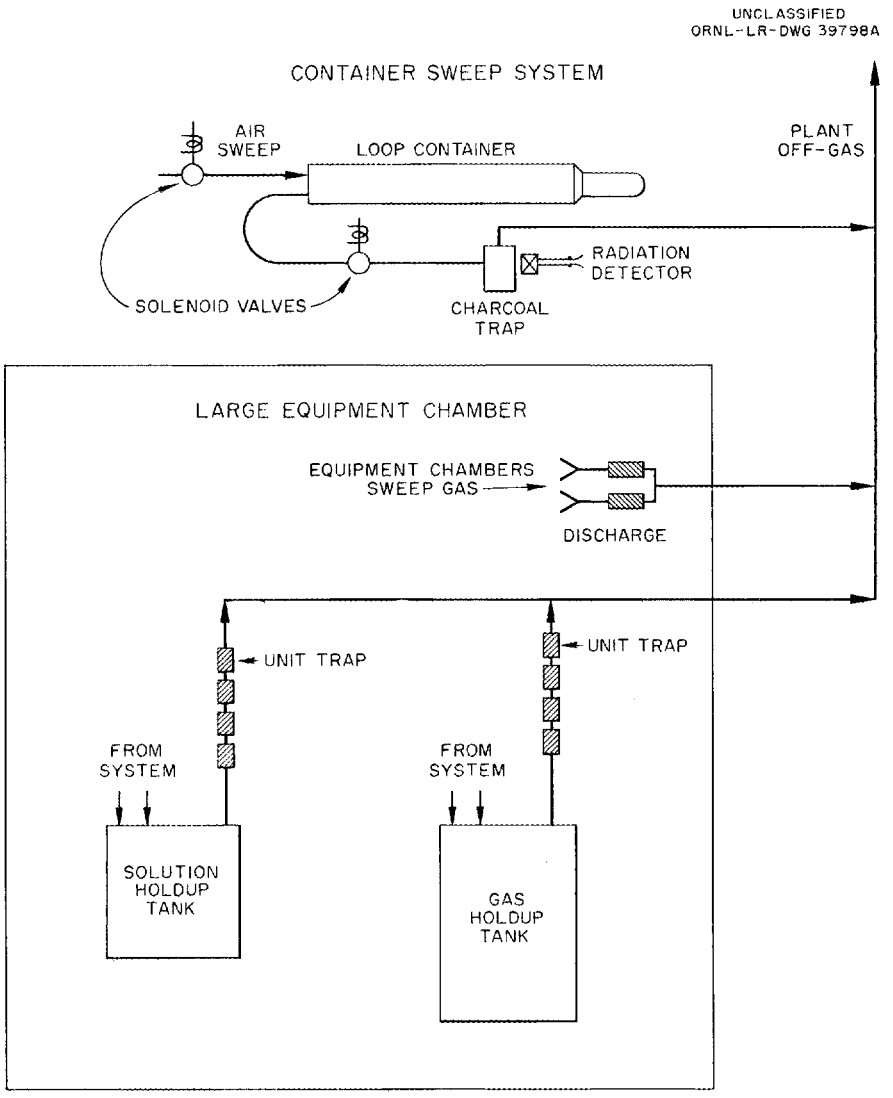

Fig. 35. Charcoal-Trap Installation, ORR Loop Facility.

4.11 Loop Retraction Mechanism

At the ORR loop facility a retraction mechanism is provided which allows the loop package to be partially withdrawn from the beam hole, thereby reducing the flux level so that data and loop operation can be checked at reduced flux levels without reactor power reduction. The loop package (which includes the shield plug and circulating loop; ~8 in. in diameter and 12 ft long) is retracted as a unit. Retraction or insertion of the loop is accomplished manually by means of a screw mechanism and a sliding seal as shown in Fig. 36. The sliding seal is necessary to contain the water circulated in the annular space between

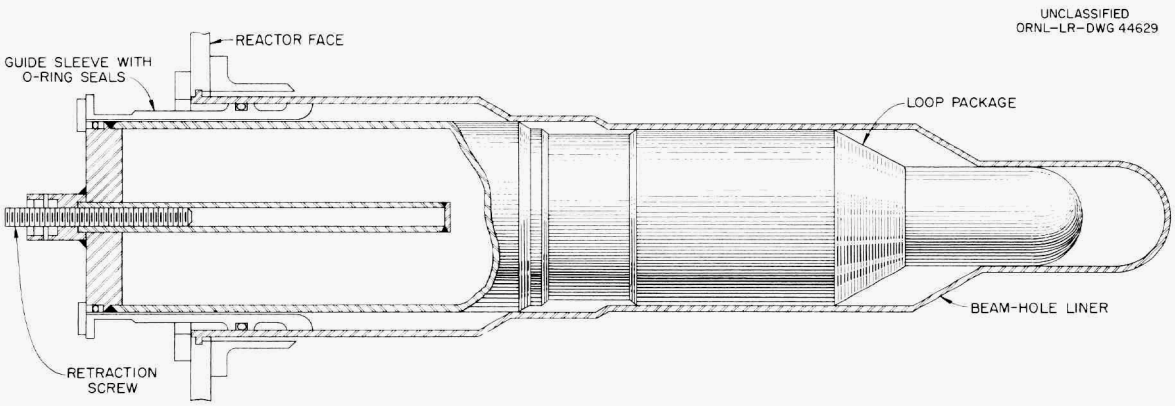

Fig. 36. Retraction Mechanism, ORR In-Pile Loop.

the loop container and beam-hole liner. With the loop in the fully inserted position, it is ~1 in. from the reactor lattice. The loop can be retracted ~18 in., and the portion of the liner previously occupied by the loop is filled with water. In the fully retracted position the flux at the loop core section is reduced by a factor of about 100.

4.12 Loop Carrier

Upon completion of in-pile operation the loop is withdrawn from the beam hole into a lead-shielded carrier (Fig. 37). Openings in the wall of the carrier

Fig. 37. Loop Carrier.

provide access to the connector (Sec. 4.3) and allow the loop to be separated from the shield plug. The loop, inside the carrier, is then transported to a remote-handling cell equipped with facilities to dismantle the loop and remove the corrosion specimens.

5. LOOP INSTRUMENTATION

The loop instrumentation[5,6] performs several functions. Briefly these functions are: (1) to control loop temperature by automatically controlling the heaters and coolers, (2) to provide information about conditions within the loop (temperature, pressure, pump performance, etc.), (3) to warn of abnormal conditions, and (4) to perform automatically a number of actions which will reduce the hazards arising from these abnormal conditions. The automatic protection usually consists of reactor setback or scram, but also includes corrective action in the loop, such as pump cutoff, heater shutoff, or energizing emergency power systems. It should be kept in mind that the greatest hazard in a loop experiment is the possible release of large amounts of radioactive material, and all the automatic safety interlocks are used to preclude any such possibility.

The instrument and control panels for the three in-pile loop facilities are located near the equipment chambers at the face of the reactor shielding. Because of the complexity of the loop, a large number of instruments are required to adequately control the loop at operating conditions and provide information required for evaluation of conditions within the loop. Figure 38 is a photograph of the instrument and control panel used for the loop operated in the HB-4 beam hole of the LITR.

5.1 Temperature Measurement and Control

The in-pile loops are normally operated in a temperature range of 250 to 300°C. Some 50 to 60 thermocouples are used to measure, control, or record the temperatures of the loop itself and the temperatures of most of the associated auxiliary equipment. However, the major concern is with the measurement and control of the primary-loop temperatures. Here, some 14 to 18 thermocouples are used. All the thermocouples are glass-insulated, and all are of iron-constantan except one, which is Chromel-Alumel, and it is located in the thermowell in the liquid phase of the pressurizer, along with an iron-constantan thermocouple.

5.1.1 Loop Temperature

Figure 39 is a schematic diagram showing the location of thermocouples around the loop circuit in the LITR loops. Thermocouples 9 and 10 in the pressurizer and thermocouple 13 in the main loop stream are inserted into thermocouple wells. After installation in the wells, the thermocouple junctions are bonded to the well by a discharge welding technique. All other thermocouples are attached on the various loop surfaces by spot welding and are then insulated with glass tape and aluminum foil.

Full-case electronic recording potentiometers are used for the measurement and control of these temperatures. The loop temperature is controlled from thermocouple 13, located in a thermocouple well in the in-line corrosion specimen holder, and a controller with pneumatic output positions the Variacs supplying the loop heater power. The thermocouple that controls the loop temperature and the thermocouples that measure the core nose temperature and the core inlet

[5] J. A. Russell, Jr., "Instrumentation for Solution Loop Experiments Inside a Nuclear Reactor," ISA Journal 9, 930 (1957).
[6] R. A. Lorenz, Preliminary Report on Instrumentation for ORR HRP Loop HN-1, ORNL CF-56-10-104 (Oct. 23, 1956).

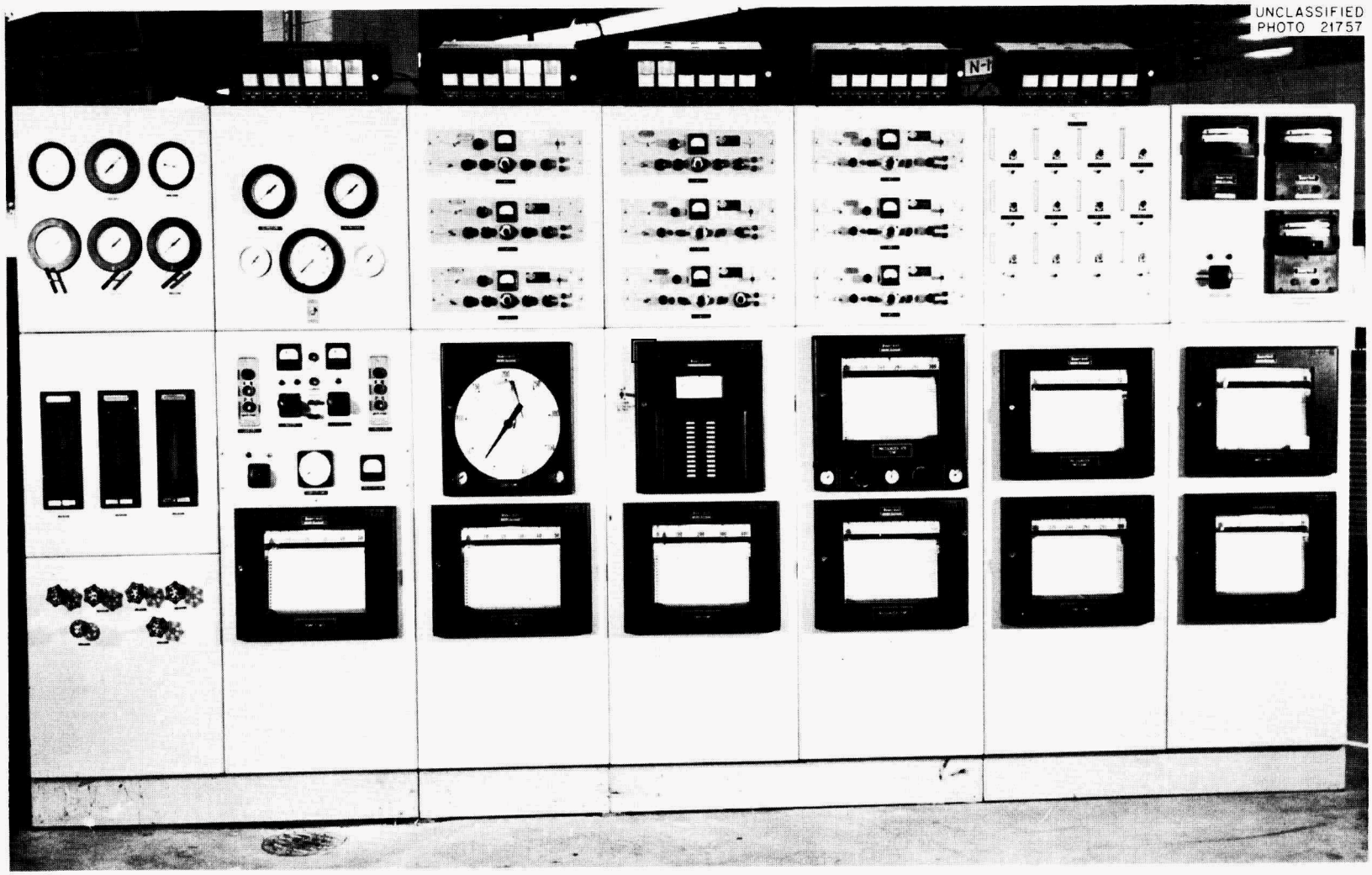

Fig. 38. In-Pile Loop Control Panel, LITR HB-4 Facility.

UNCLASSIFIED
ORNL-LR-DWG 50484

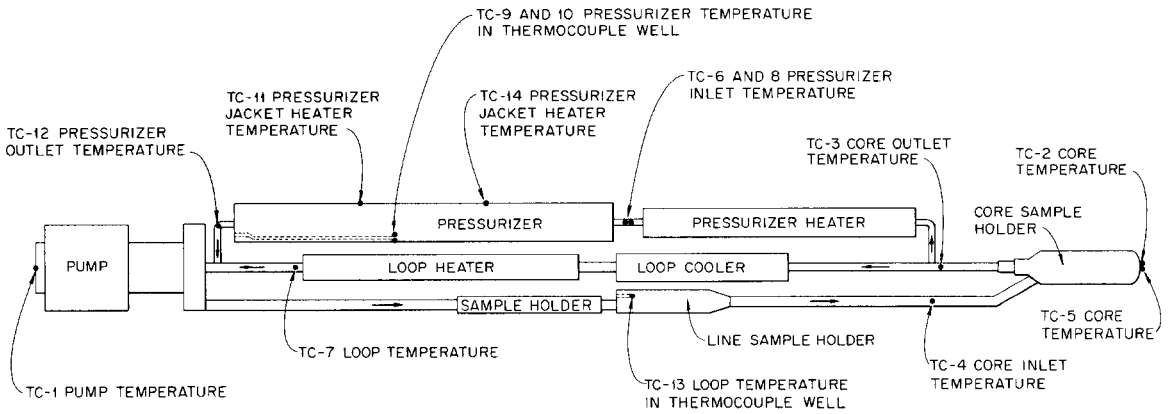

Fig. 39. Thermocouple Locations, LITR In-Pile Loop.

and outlet temperatures are connected to full-case electronic recording potentiometers equipped with extended-range scales (225 to 325°C) in order to obtain maximum precision during in-pile operation. A deviation in the loop temperature of from 1 to 2°C is considered significant when indicated by any one of the thermocouples, and corrective action, to the extent of reactor scram in some cases, is initiated with a 5°C deviation in loop temperature. Increasing temperatures at the core nose or at the core outlet may indicate solution instability, with resultant deposition of uranium in the core. A decreasing loop temperature affects the activity of the catalyst used for recombination of radiolytic gas formed in the loop and may allow outgassing and reduction of circulation in the main stream.

5.1.2 Pressurizer Temperature

The temperature of the pressurizer is usually 10 to 30°C above that of the loop to provide steam overpressure. A small bypass stream from the loop is routed through a pressurizer heater where it is heated to the desired temperature before entering the pressurizer. To ensure equilibrium thermal conditions in the pressurizer, a heating jacket surrounds the pressurizer. After passing through the pressurizer, the solution is returned to the main loop stream.

The temperature in the pressurizer is controlled from a thermocouple attached to the tubing between the pressurizer heater and pressurizer. The output signal from the full-case electronic recording potentiometer positions air-operated Variacs to regulate the power to the pressurizer heater.

In order to obtain an accurate measure of the temperature of the solution in the pressurizer, two thermocouples (one, iron-constantan; the other, Chromel-Alumel) are installed in a thermocouple well in the pressurizer. The two thermocouples are connected to a precision electronic potentiometer with push-button point selection for intermittent use. For the periods between the precision measurements one of the two thermocouples is connected to a full-case extended-range recorder for continuous monitoring. The pressurizer-jacket temperature is indicated and controlled by a thermocouple attached to the jacket and connected to an electronic extended-range potentiometer (225 to 325°C), and the power supply to the heating jacket is automatically adjusted by an air-operated Variac which is actuated by the potentiometer output.

5.2 Pressure Measurements

The loop pressure is measured by two strain-gage-type pressure cells which are mounted in the small equipment chamber and are connected to the loop pressurizer by capillary tubing. One of the cells is connected to a strip-chart recorder for continuous monitoring of the loop pressure, and the other is connected to an extended-range precision indicator; the precision measurement, made periodically, is used in conjunction with precision temperature measurements in the calculation of steam and gas pressures within the pressurizer.

Eight additional pressure cells, mounted in the large equipment chamber, are used to indicate pressures in other parts of the system, such as the "standard drain volume," fuel expansion chamber, gas holdup tank, and gas addition tank. These cells are connected to the extended-range precision indicator, which is equipped with push-button selector switches, and are measured periodically as desired.

All pressure cells are selected for low hysteresis to improve the accuracy of readings, and a 12-v d-c power supply constant to $\pm 0.1\%$ is used to energize the bridge circuits of the pressure cells. Zero and span adjustments for each pressure cell are made by means of transducers designed at ORNL, and the d-c supply voltage is checked and adjusted before precision readings are taken.

5.3 Miscellaneous Power Measurements

All electrical power input to the loop (as well as the cooling rate) is continuously monitored. These power measurements furnish a measure of the performance of individual components such as the pump, loop heater and cooler, and pressurizer heater, and they also provide information on the over-all performance of the loop. For example, the amount of fission and gamma heat generated within the core may be determined from the difference in the total loop power input with the reactor on and with the reactor off.

5.3.1 Pump Power

Electrical power input to the pump is usually a qualitative indication of the circulation effected by the pump (refer to Fig. 10). Zero power input indicates, of course, complete pump stoppage and is caused by openings in the stator windings or in some other part of the pump circuit. On the other hand, moderately low pump power may mean gas binding of the impeller or an obstruction in the main circulating line and, consequently, reduced fuel flow. High power input may indicate a low rotational speed, which may be caused by excessive friction in the pump bearings, and a correspondingly low circulation rate. Very high power input may mean complete mechanical seizure of the rotor. For these reasons a full-case electronic recording instrument with a 0 to 1500-w range is used to indicate and record pump power and, in conjunction with the pump temperature measurement, to gage the performance of the pump.

The pump motor is a 220-v three-phase induction type, and indicating voltmeters and ammeters are provided to check the electric balance between each of the three phases.

5.3.2 Loop Heaters

Electric power to the loop heaters is monitored continuously by indicating wattmeters. To obtain a more accurate measure of the heater power input over any period of time, integrating watt-hour meters are also used in the heater circuit.

5.3.3 Pressurizer Heaters

A full-case indicating and recording potentiometer is used to measure the pressurizer-heater power, while an indicating wattmeter monitors electric power input to the pressurizer jacket heater. As in the case of the loop heaters, an accurate measure of the total power input to each heater over any period of time is obtained by means of watt-hour meters.

Since a constant temperature difference is maintained between the solution in the loop and that in the pressurizer, the pressurizer-heater power provides a quantitative metering of the pressurizer flow rate. This relationship is verified on each loop by calibration, and a typical calibration curve is shown in Fig. 40. A decrease in the heater power (flow rate) can result from either

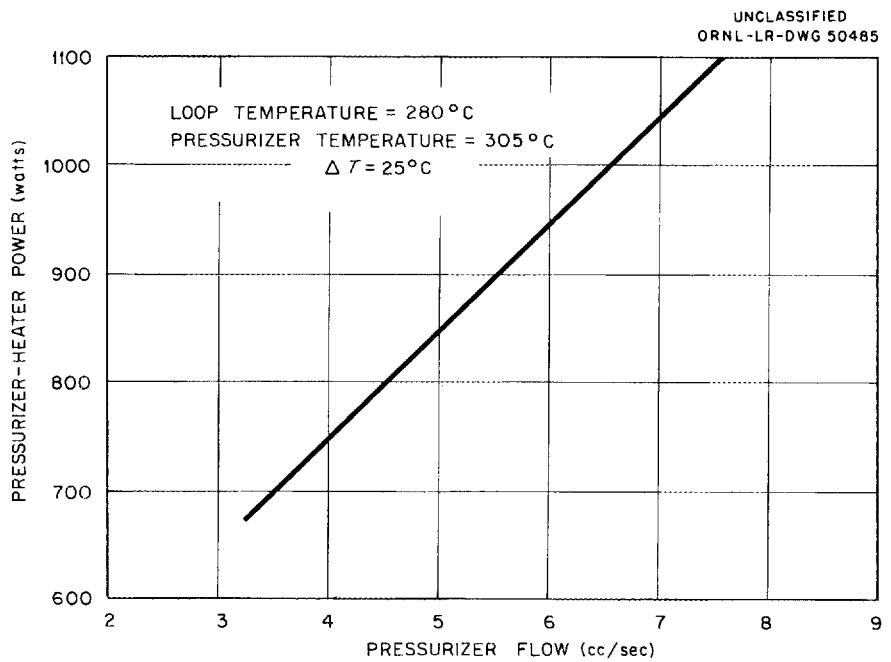

Fig. 40. Relationship Between Pressurizer Flow Rate and Pressurizer Heater Power.

a partial plugging of the pressurizer circuit or a decrease in the flow in the loop main stream, since flow through the pressurizer is regulated by the pressure drop in the loop stream between the points at which the inlet and return connections of the pressurizer are made.

5.4 Radiation Monitors

Six radiation monitors are used in each in-pile loop facility to detect the escape of any radioactive material. These detectors also monitor the radiation level in the small and large equipment chambers during various operations, such as removal of solution samples from the loop. Radiation levels measured by all six of the monitors are continuously indicated throughout the in-pile loop operation.

Four of the detectors are ion-chamber gamma monitors mounted in the small equipment chamber, one being close to each of the four capillary tubes that are connected directly to the loop. Each of the ion chambers is connected to an ORNL-built d-c electrometer mounted in the control panel, and each electrometer is equipped with a five-position range selector so that the full-scale reading can be varied from ~350 mr/hr to 700 r/hr.

A fifth monitor is a scintillation gamma detector used to detect any leakage of material from the loop itself by monitoring a continuous air sweep of the loop container. This detector is mounted close to a charcoal trap (for adsorption of any fission-product gases and increased sensitivity) in the large equipment chamber, through which the air sweep is routed.

A BF_3 thermal-neutron detector is mounted in the closure door of the small equipment chamber directly in line with the reactor beam hole in order to detect any leakage of thermal neutrons. The neutron detector is connected to an ORNL-built d-c electrometer with a five-range selector switch such that the full-scale instrument reading can be varied from 1×10^4 to 2×10^6 neutrons/cm^2·sec.

5.5 Reactor Safety Interlocks and Alarm Conditions

All reactor safety interlocks and alarm circuits are designed, primarily, to minimize the possibility of uncontrolled release of radioactive material, and this hazard is increased whenever the loop operation deviates from prescribed conditions. Since the pump loop is a closed circuit, temperatures in any part of the circuit are reflected in other parts. This interrelationship of temperatures provides several points of temperature measurement for safety interlocking of the loop with the reactor. The rate and magnitude of excursions of any of the controlled variables, such as temperature or pressure, are naturally dependent on the particular event which occurs, and excursions of these controlled conditions are instrumented to give an alarm or reactor setback or to automatically initiate corrective action.

A diagrammatic presentation of the safety and alarm interlocks which may be actuated by a service failure (electrical power, water, or air) or a loop-component failure or malfunction is shown in Fig. 41. A brief discussion of the safety interlocks and alarm conditions follows.

5.5.1 Fuel Circulating Pump

Malfunction or failure of the fuel circulating pump results in partial or complete loss of fuel circulation. Since the pump power is indicative of the circulation rate (Fig. 10), a local alarm consisting of a visible light and an audible signal is initiated when the pump power deviates ±10% from normal. If the pump power deviates ±20%, a reactor setback is initiated to stop fission and gamma heat generation in the loop core.

5.5.2 Low Loop Temperature

A decrease in the loop temperature results in a decrease in the rate of recombination of the hydrogen and oxygen dissolved in the loop main stream (by reduction in catalyst activity). Excessive radiolytic-gas pressures are avoided to minimize the hazard of an explosion. A decrease of 3°C in loop temperature results in a local panel-board alarm. A 5°C decrease initiates a reactor setback to stop the generation of radiolytic gas.

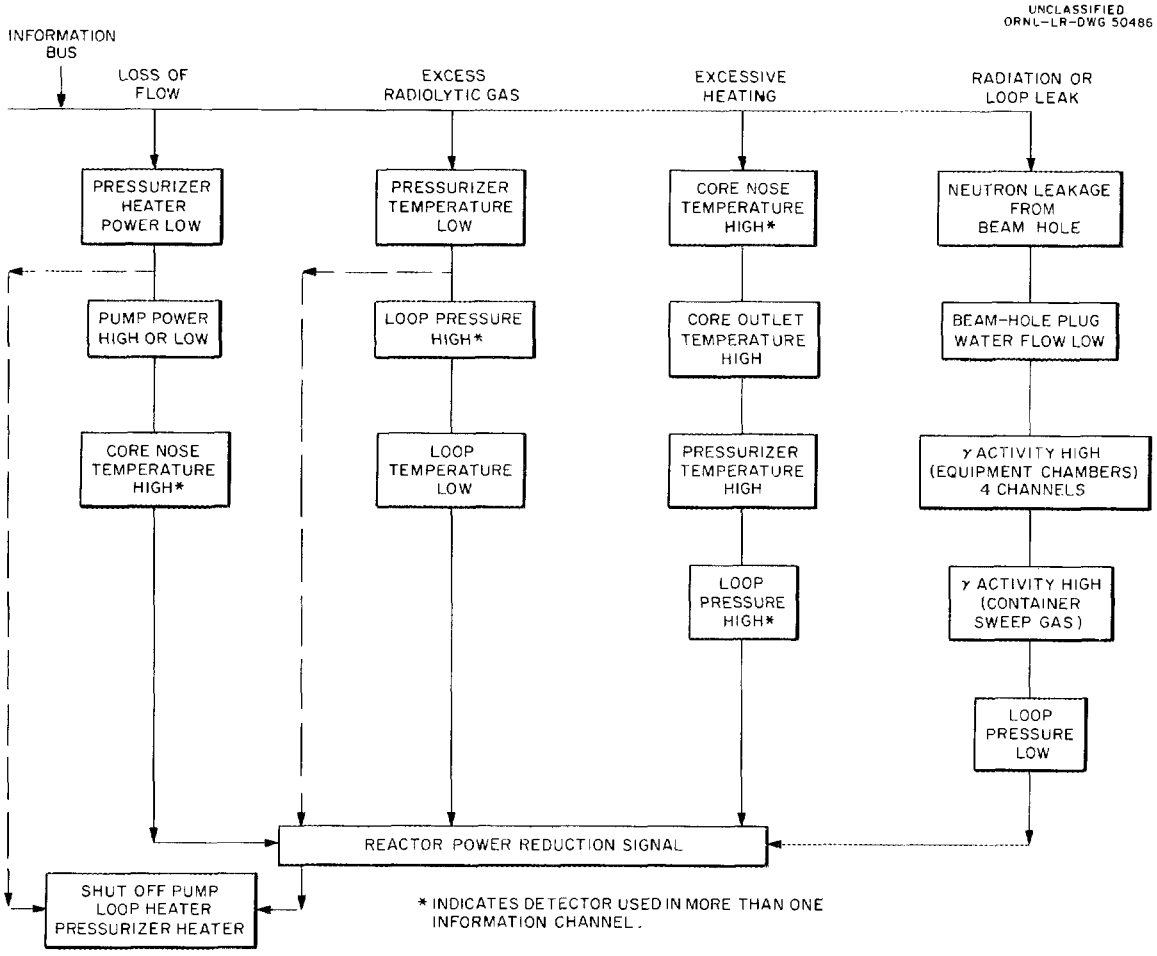

Fig. 41. Safety-Circuit Information Flow Diagram.

5.5.3 High Loop Temperature

High loop temperature, except in the core, is not of primary importance from a safety standpoint. An increase in loop temperature of 5°C results only in a local alarm so that the operator may initiate corrective action.

5.5.4 High Core Temperature

The temperature at the most forward position of the loop core section is indicative of the amount of fission and gamma heating. Thus an increase in the core temperature would indicate a concentrating of fuel solution (chemical instability) or a reduction of heat transfer in the core region (from loss of flow). A 5°C increase in core temperature results in a local alarm at the panel board. A 10°C increase results in a reactor setback to stop the generation of fission and gamma heat.

5.5.5 Low Pressurizer Inlet Temperature

The temperature of fuel entering the pressurizer is controlled by the pressurizer-heater power. A decrease in the pressurizer temperature, which

may be caused by failure of the pressurizer heater, results in a decrease in the rate of recombination of radiolytic gases and also reduces the quantity of diluent steam. Too great an increase in the concentration of these gases ($H_2 + 1/2\ O_2$) would constitute an explosion hazard. A 3°C decrease in pressurizer inlet temperature results in a local alarm, and a 4°C decrease results in a reactor setback.

5.5.6 High Pressurizer Temperature

An increase in the pressurizer temperature results in an increase in the loop pressure, which could affect the integrity of the loop. An increase of 3°C is cause for a local panel board alarm. An increase of 5°C initiates a reactor setback to stop the production of radiolytic gases until the loop temperatures are brought back under control.

5.5.7 Low Loop Pressure

The loop pressure is made up of steam vapor pressure, excess-oxygen partial pressure, and the partial pressure of radiolytic gas. A decrease in loop pressure can have serious consequences for one of several reasons: (1) a loss of steam pressurization results in an increase in the concentration of radiolytic gas, with an increase in the possibility of an explosion (as noted in Sec. 5.5.5); (2) it may indicate a leak; and (3) a decrease in the total system pressure may allow outgassing in the main loop stream and affect the rate of fuel circulation. A decrease of 20 psi from the normal operating pressure will give a local alarm, and a decrease of 45 psi will result in a reactor setback to stop production of radiolytic gas.

5.5.8 High Loop Pressure

An increase in the loop pressure is undesirable, as it can affect the integrity of the loop. A pressure increase may also result from increasing amounts of radiolytic gas in the pressurizer, which is hazardous if explosive proportions are attained (see Sec. 7.4.2). Increases of 20 and 45 psi result, respectively, in a local alarm and a reactor setback.

5.5.9 Loop Leak

Any leakage of radioactive material from the loop would be confined within the loop container. To detect such a leak at the earliest possible moment and allow early corrective action, a small air sweep through the container is maintained at all times. This air is routed through a charcoal trap to adsorb radioactive gases picked up by the air, and a radiation detector mounted close to this trap is set to give a local alarm and a reactor setback. Furthermore, if radioactivity is detected, valves in the air-sweep line are closed automatically to confine the radioactivity within the container.

5.5.10 Capillary-Tube Leak

A leak in one of the four capillary tubes connected to the loop and terminating in the small equipment chamber would result in the discharge of fuel solution into the equipment chambers. The equipment chambers are maintained at a slightly negative pressure via the reactor off-gas system. In addition, the equipment chamber is connected to the reactor hot-drain system.

The four radiation monitors located near these four tubes in the small equipment chamber are used to give a warning and a reactor setback when radioactivity is detected. Water spray nozzles mounted in the chambers may be used to flush any radioactive material to the hot-drain system, and charcoal traps are provided for adsorption of radioactive gases before discharge to the reactor stack.

5.5.11 Beam-Hole Radiation

The neutron detector mounted in the lead door of the small equipment chamber directly in line with the beam hole will signal a reactor setback upon detection of neutron leakage from the beam hole.

6. LOOP TESTING AND PREPARATORY OPERATIONS

Prior to the final assembly of a loop the core, pressurizer, pressurizer heater, and in-line specimen assemblies are checked separately and calibrated for flow rate vs pressure drop. The pump is operated in a test stand to ensure satisfactory performance before it is installed in the loop.

After the loop has been assembled, it is ready for the various tests and operations that are performed before it is approved for in-pile service. Hydrostatic pressure checks in excess of operating pressure, measurements of the flow rate through the different components of the system (the pressure taps used for this purpose are subsequently seal-welded), and leak checks with a helium leak detector are made. If no leaks are detected and if flow indications are satisfactory, the loop is connected to all service lines (thermocouples, pressure and drain lines, and electrical leads), and the shield plug and loop connector are mounted in position so that the service leads can be passed through the openings provided. The loop is then operated with a 3 wt % trisodium phosphate solution circulated at 100°C to degrease the loop piping. This is followed by operation with a 5 wt % nitric acid solution at 100°C. The nitric acid solution is regularly analyzed to verify the required high quality of the materials used in the construction of the loop in terms of nature and buildup of corrosion products.

6.1 Pressure-Temperature Correlation

Since the water-vapor pressure in the loop pressurizer must be accurately known in order to determine the partial pressures of added oxygen and radiolytic gas, a pressure-temperature correlation is made in the loop at elevated temperature. This calibration is made by evacuating the loop and charging with water. The loop is then brought to operating temperature, and the pressure observed in the pressurizer is compared with the pressurizer temperature measurement. Normally a variation of up to ±1°C in temperature, compared with the steam-table pressure-temperature relationship, is considered acceptable, and any deviation within this limit is used as a temperature correction factor during in-pile operation.

6.2 Out-of-Pile Operation

Following the "steam calibration," oxygen gas is added and the loop is operated at temperature and pressure for 100 to 200 hr. During this period the loop is carefully checked for proper operation, all thermocouple and pressure-cell measurements are checked for accuracy and reliability, and the influence of the pressurizer-jacket temperature on the oxygen partial-pressure determination is observed (Fig. 42).

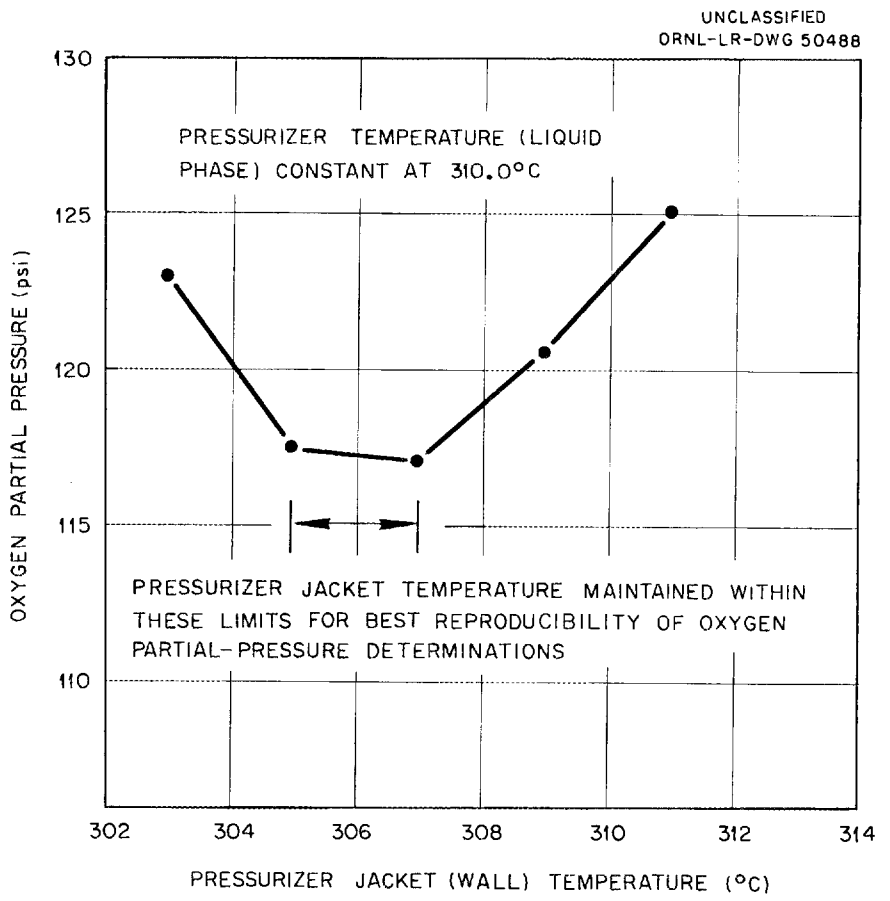

Fig. 42. Effect of Pressurizer Jacket (Wall) Temperature on Oxygen Partial Pressure in Pressurizer.

The loop is then filled with a solution of unenriched uranyl sulfate containing copper sulfate, used to catalyze the recombination of radiolytic hydrogen and oxygen,[7] and sulfuric acid, required to maintain chemical stability of the fuel solution, at the concentrations proposed for in-pile operation. The loop is operated for a prescribed time (usually 100 to 200 hr) at operating temperature and pressure. Again, careful attention is given to proper loop operation, and thermocouple and pressure measurements are made. Throughout the out-of-pile test operation intermittent leak and electrical checks are made; and since the loop container has not been installed, repairs (if required) can be made. Next, the loop container is installed around the loop and welded to the container bulkhead, through which all service lines pass. The container-and-bulkhead assembly is pressure-tested to 400 psia with helium gas to verify its ability to contain any leaks or ruptures of the loop during operation. Although leakage of helium through the container wall is not permissible, a small helium leak rate is allowable through the thermocouple, electrical wire, and tubing penetrations in the container bulkhead. Based on the tolerances for discharge of radioactive gases to the reactor off-gas system (to which the loop facility is vented), a total

[7]H. F. McDuffie et al., "Homogeneous Catalysis for Homogeneous Reactors. Catalysis of the Reaction Between Hydrogen and Oxygen," J. Phys. Chem. 62, 1030 (1958).

helium leak rate of 2×10^{-3} scc/sec through the bulkhead seals with a 50-psi differential pressure is considered acceptable. A radiation-shield plug is then jointed to the loop by means of the connector, and the connector is then covered with a thin brass membrane (see Sec. 4.3).

To ensure that the canned loop and shield plug will fit within the beam hole of the experimental reactor, a duplicate or mockup of the beam-hole liner is provided for out-of-pile testing. This mockup beam-hole liner is dimensionally identical to the one in the reactor. The completed loop and shield-plug assembly, which is referred to as the loop package, is installed in the mockup beam-hole liner and checked for proper fit; operation of the loop within this duplicate liner is continued until the loop is judged satisfactory for in-pile operation.

During the preparatory operations and performance checks, a typical loop is usually operated for approximately 500 hr. A summary of these operations for a typical loop is shown in Table 1. After the loop has demonstrated satisfactory performance in the out-of-pile tests, it is ready for in-pile operation. Cannon multipoint disconnect plugs for thermocouple and electrical leads allow the loop package to be unplugged at the mockup and to be plugged into identical disconnects at the reactor. After it is removed from the mockup, the loop package is transported to the reactor.

Table 1. Summary of Preparatory Operations for a Typical Loop

Time (hr)	Conditions
4	3 wt % trisodium phosphate + He, 100°C
24	5 wt % HNO_3 + He, 100°C
Variable	H_2O ("steam calibration")
100	$H_2O + O_2$, 250°C
40	0.17 *m* UO_2SO_4 (normal) + 0.031 *m* $CuSO_4$ + 0.006 *m* $H_2SO_4 + O_2$, 250°C
Install container can around loop, connect shield plug, and install assembly in beam-hole liner mockup	
150	0.17 *m* UO_2SO_4 (normal) + 0.031 *m* $CuSO_4$ + 0.006 *m* $H_2SO_4 + O_2$, 250°C

7. IN-PILE OPERATING CONDITIONS AND PROCEDURES

In order for significant data to be obtained from an in-pile loop, the loop must operate for a relatively long period of time (1000 to 2000 hr), and this operation must be practically continuous after installation in the reactor. Maintenance operations that may be performed while the loop is in place in the reactor are very limited. Therefore great care is taken to ensure trouble-free operation. During the period of thorough testing preparatory to in-pile operation, the loop must demonstrate satisfactory performance. It must supply evidence that it is capable of long-term operation without maintenance. Then, after the loop has been installed in the reactor, misoperation is guarded against by close adherence to check lists (see the appendix) that detail each step in the operations. In the following paragraphs, some important operational procedures are briefly described. The loop flowsheet (Fig. 23) should be referred to.

7.1 Checkout Operation at the Reactor Prior to Reactor Installation

The empty loop delivered to the reactor is first filled with water, and oxygen gas is added for an operating test prior to installation in the beam hole. This is accomplished by making connections with the disconnect plugs in the small equipment chamber while the loop is outside the beam hole. Connections to the auxiliary equipment are also made. This operating test allows a check of all instruments and auxiliary equipment and a confirmation of information obtained in the mockup.

Next the loop is charged with uranyl sulfate solution containing enriched uranium, and oxygen gas is added (see Sec. 7.2). The loop is then operated in a final checkout for a short time at the temperature and pressure expected during in-pile operation.

7.2 Initial Fuel and Oxygen Addition

Uranyl sulfate fuel solution is charged to the loop before it is installed in the experimental beam hole. This is done by evacuating the loop and then allowing fuel to be drawn into the loop from a tared graduate so that the weight and volume of fuel added can be measured exactly. A different procedure, described in Sec. 7.4.9, is used to add fuel to the loop after in-pile operation is started. A typical fuel solution would be 0.17 *m* UO_2SO_4 (enriched), 0.031 *m* $CuSO_4$, and 0.04 *m* H_2SO_4 dissolved in either H_2O or D_2O.

After the fuel solution has been charged to the loop, oxygen is introduced into the vapor space of the pressurizer. The oxygen is added from the oxygen addition and metering system in the large equipment chamber (see Sec. 4.9), and the same system is used when subsequent oxygen additions are required during in-pile operation.

The amount of oxygen added is carefully measured so that it can be correlated with the oxygen partial pressure developed in the pressurizer at operating temperature in terms of the volume of oxygen per unit of pressure. This "oxygen factor" (cc O_2 (STP)/psi O_2 pressure) is used to estimate the quantity of oxygen consumed in corrosion from the oxygen partial-pressure measurements obtained during the in-pile run.

Oxygen additions are made through a capillary tube which connects the pressurizer with the oxygen tank. This tube is filled with water after the oxygen addition to prevent possible diffusion of radiolytically produced hydrogen into this line, which would create an explosion hazard.

7.3 Installation Procedure

Installation of the loop package in the beam hole comprises the following steps, which can usually be accomplished in an 8-hr period:

1. The loop package is inserted in the experimental beam hole.

2. The capillary tubes from the loop package and cooling-water lines and air lines are connected to corresponding lines at the face of the reactor.

3. The electrical leads and thermocouples are plugged in and tested.

4. Cover plates and lead shielding are installed around the equipment chambers.

7.4 In-Pile Operation of Loop

After installation in the reactor beam hole, the loop is brought to operating temperature and pressure. When the loop has reached steady-state operating conditions, oxygen partial-pressure measurements are begun. (These measurements are routinely made and recorded throughout the entire in-pile operating period.) At this point the reactor may be brought to power. In the in-pile loop facility at the ORR, the loop is normally operated in the retracted position, where it is practically out of the high-neutron-flux region, during the period when the reactor is brought to power, and the loop is then inserted for exposure to the neutron flux. Normal operating temperature of the various loops in-pile is in the range of 250 to 300°C, and the temperature in the loop main stream is controlled within ±2°C. The pressurizer temperature is usually 15 to 30°C above that of the loop and is more closely controlled, usually to within ±1°C.

The status of the loop during operation is determined by measurements of temperature, pressure, loop-heater power, pressurizer-heater power, and pump power. Information obtained from such measurements provide a basis for action to prevent the formation of explosive mixtures of radiolytic gas in the pressurizer and to prevent bubble formation in the loop main stream. Further, a knowledge of the amount of fission and gamma heat generated in the loop is obtained from the various heater-power and temperature measurements, and from the measurements the loop and pressurizer flow rates can be calculated. From the measurements of temperature and pressure in the pressurizer, the partial pressures of steam, oxygen, and radiolytic gas can be determined.

7.4.1 Determination of Steam, Excess-Oxygen, and Radiolytic-Gas Pressure

Precision measurements of the system pressure are made by means of a strain-gage pressure cell located in the small equipment chamber and connected to the gas space in the pressurizer through a 40-mil-ID tube. This pressure is the sum of the partial pressures of steam, excess oxygen, and radiolytic hydrogen and oxygen.

The partial pressure of steam is determined from the precision temperature measurements of the liquid in the pressurizer. The measurement of the excess-oxygen partial pressure is made at those times when the reactor is at zero power, or, for an ORR loop, when the loop is in the retracted position out of the neutron flux. This value is simply the difference between the steam partial pressure and the total system pressure before fissioning occurs.

The radiolytic-gas pressure is determined from the increase in pressure which results when the loop is placed in the neutron flux. For a typical loop the pressurizer is operated at a temperature of 300°C, which corresponds to a saturated-steam pressure of 1250 psi. Usually about 100 psi of excess oxygen is maintained in the pressurizer vapor space, and a radiolytic-gas pressure in the order of 20 psi is normal. Thus a total system pressure of 1370 psi may be expected for a typical in-pile loop.

7.4.2 Explosive Mixtures in Pressurizer

Explosive mixtures of radiolytic hydrogen and oxygen (knallgas*) could be attained in the pressurizer vapor space[8,9] if the recombination catalyst were to fail and if the gases continued to be generated. Similarly, if the steam diluent in the pressurizer were decreased as a result of a decrease in the pressurizer temperature, the hydrogen-oxygen and steam mixture could also approach an explosive proportion. With the control specification placed on total system pressure (±20 psi) and reactor setback (+45 psi), any increase in pressure which would accompany the failure of the catalyst can be detected and corrective action automatically taken well before an explosive concentration is reached.

In mixtures of knallgas-steam for in-pile loops where pressurizer temperatures are in the range of 280 to 300°C, no reaction (ignition or detonation) is possible unless the ratio of partial pressure of knallgas to that of steam exceeds ~7% (light-water system) or ~23% (heavy-water system).[10] Above these limits the pressures which result from a reaction increase with increasing knallgas proportion. For example, the partial-pressure ratios must be increased to about 18 and 40%, respectively, for light and heavy water to produce reaction pressures of about 1.4 times the initial mixture pressure.

Based on these considerations and taking into account the loop design pressure of 2000 psia, radiolytic-gas pressure increases for light- and heavy-water systems of 130 and 270 psi can be tolerated in a loop in which the pressurizer temperature is 300°C and with a normal radiolytic-gas partial pressure in the pressurizer of 20 psi.

Since the allowable radiolytic-gas concentration depends on the loop operating conditions, each loop experiment is analyzed so that operating conditions and safety interlocks are established which preclude the attainment of explosive mixtures in the pressurizer vapor space.

If the pressure should approach a dangerously high value, the reactor would be "set back" to stop generation of radiolytic hydrogen and oxygen, and the temperature of the loop would be maintained long enough to allow recombination of the hydrogen and oxygen, which would proceed even with catalyst failure but at a much lower rate. The specifications placed on temperature control of the pressurizer (±3°C) also preclude any significant decrease in the steam diluent in the pressurizer vapor space, which would also lead to explosive concentrations of knallgas, before the reactor will be signaled for a fast setback.

---

*Knallgas = Stoichiometric mixture of hydrogen and oxygen.

[8] H. A. Pray, C. E. Schweickert, and E. F. Stephan, Explosion Limits of the Hydrogen-Oxygen-Water System at Elevated Temperatures, BMI-705 (Nov. 1, 1951).

[9] I. M. Macafee, Jr., Detonation, Explosion and Reaction Limits of Saturated Stoichiometric Hydrogen-Oxygen-Water Mixtures, Syracuse Report Ch.E. 273-5664F4 (July 1, 1946).

[10] J. A. Luker, L. B. Adler, and E. C. Hobaica, The Formation of Detonation in Saturated Mixtures of Knallgas-Steam, Syracuse University Research Institute Report Ch.E. 273-591F (Jan. 23, 1959).

7.4.3 Prevention of Bubble Formation in the Loop Main Stream

Since in-pile loops are partially steam-pressurized, the dissolved-gas pressure in the main stream can be maintained well below the saturation pressure, and thus the formation of bubbles is avoided.[11] Absence of bubbles in the loop main stream reduces the possibility of explosive mixtures in the system, eliminates a possible source of corrosion acceleration from cavitation, and prevents gas binding of the pump impeller, which would reduce the fuel circulation rate. To maintain this condition, it is necessary to maintain the pressurizer temperature above the loop temperature at all times in order to provide sufficient steam overpressure. This requirement is particularly important during heatup, because in the temperature range from 90 to 120°C the oxygen solubility passes through a minimum (maximum pressure).

Usually the saturation gas pressure would be exceeded first in the pump-rotor cavity where the temperature is approximately 100°C, which is near the point of minimum solubility (maximum gas partial pressure). Gas bubbles are readily detected in this space since outgassing reduces circulation of the fluid in the pump-rotor cavity past the pump cooler and results in an excessive pump temperature, which gives a visible and audible panel-board alarm.

7.4.4 Gas Addition

As corrosion proceeds in a stainless steel loop, oxygen is consumed and the pressure of excess oxygen decreases. Thus, from time to time throughout the period of operation, oxygen gas is added to the pressurizer in amounts sufficient to return the partial pressure of oxygen to its original value (usually about 100 psi at 300°C). For a typical loop the oxygen pressure is reduced by 2.8 psi per day for an over-all corrosion rate of 1 mpy, and the oxygen pressure is usually not allowed to drop below 25 psi. Under these conditions an oxygen addition would be required about every two weeks.

Oxygen additions are made from the gas addition and metering system (Sec. 4.9). As in the case of the initial oxygen addition, the amount of oxygen added is carefully measured. Usually about 15 cc (STP) is required to increase the partial pressure of oxygen in the pressurizer by 1 psi.

Following each addition of oxygen, the capillary tube through which the gas is added is refilled with water from the water expansion chamber (Sec. 4.8). This refilling operation is made at loop operating pressure, and the quantity of water is controlled so that an excess will not enter the loop and dilute the fuel solution.

7.4.5 Pressurizer Flow-Rate Measurement

The rate of flow through the pressurizer is fixed by the pressure drop between the two points on the loop at which the pressurizer inlet line and exit line are connected. This rate is normally at about 6 cc/sec (0.10 gpm). The rate during in-pile operation is determined from the pressurizer-heater power measurements. At steady-state temperature conditions (e.g., with the loop at 250°C and the pressurizer at 280°C; a Δt of 30°C through the pressurizer heater),

[11] E. F. Stephan, N. S. Hatfield, R. S. Peoples, H. A. Pray, The Solubility of Gases in Water and in Aqueous Uranyl Salt Solutions at Elevated Temperatures and Pressures, BMI-1067 (Jan. 23, 1956).

careful measurement of average pressurizer-heater power is made by using the watt-hour meter. A similar measurement of pressurizer-heater power is also made after the loop temperature has been lowered (or raised) 5°C, which changes the Δt between the loop and pressurizer by a corresponding amount. From these two measurements the pressurizer flow rate can be accurately calculated. This measurement is normally made only infrequently, since a substantial change in pressurizer flow will be reflected in the heater power demand, which is continuously monitored and recorded.

The flow of part of the fuel solution through the pressurizer is important for two reasons: (1) to maintain and control the pressurizer temperature by the flow of solution from the pressurizer heater to the pressurizer and (2) in order that oxygen gas added to the pressurizer vapor space will be transferred to the loop, and conversely that radiolytic gas generated in the loop core section will be transferred to the pressurizer. In this manner the concentrations of these gases in the pressurizer represent the concentrations in the loop main stream, and these concentrations can be calculated from partial-pressure measurements (see Sec. 7.4.1).

7.4.6 Loop Main-Stream Flow

Fuel solution circulates at a rate of about 350 ml/sec (5 gpm) in the loop main stream, with 5 to 8 cc/sec bypassed through the pressurizer. The flow rate in the loop main stream is not monitored directly during in-pile operations. Although a small change in the flow rate cannot be detected, significant changes are reflected in temperature increases in the core section.

For the loop core design used in the LITR loops, a flow rate one third of normal results in a 5°C rise in the core nose temperature for a loop in which the fission and gamma heat is ~1200 w. Because of the increased flow velocity and improved flow geometry of the core used in the ORR loop, a decreased flow rate had very little, if any, effect on the core nose temperature. In the ORR loop, the temperature rise through the core (inlet to outlet) was accurately monitored by means of a differential thermocouple such that a temperature increase of 2 to 3°C, which would accompany a threefold reduction in flow rate, could be detected. Changes in the pump power demand are also used as a measure of large changes in flow (refer to Sec. 5.3.1).

The flow rate can be changed deliberately by operating the pump from a variable-frequency motor-generator set, since the flow rate is almost directly proportional to the pump speed. Each pump and loop are calibrated at assembly to determine the relationship of pump speed and flow rate.

7.4.7 Fission and Gamma Heat Measurement

The total fission and gamma heat generated in the loop is determined by heat-balance measurements around the loop when the reactor is shut down and when the reactor is operating at power. (Heat losses are presumed constant, since the loop temperature is the same under both conditions.) This determination merely requires a summation of all the heater-power inputs at the two conditions. During periods of reactor power operation, significant changes in the fission and gamma heat are detected by means of the thermocouples attached to the core section of the loop.

The total fission-power generation is also determined from analyses of fuel samples for Cs^{137} content, and after the loop has been removed from the reactor and dismantled, the fission-energy gradient along the axis of the core normal to

the reactor lattice is determined by measuring the activity of cobalt-aluminum monitors. Further, the activity of the Zircaloy-2 corrosion test specimens can be measured and compared with calibrated controls for additional information on the flux gradient throughout the core. In this manner the fission power in the solution at individual specimen locations can be determined, so that the effect of fission power on corrosion can be gaged.

7.4.8 Fuel Sampling

Samples of fuel solution are routinely removed from the loop during in-pile operation. The samples are transported to hot-cell facilities for chemical analysis to determine the concentration of the various constituents, such as uranium, copper, and acid, in order to verify the chemical stability of the solution under the loop operating conditions. The concentration of fission products in the solution is determined, and the amount of corrosion products found (from the corrosion of the stainless steel loop) is used to determine over-all loop corrosion where soluble products result (nickel in the case of stainless steel).

Since the fuel solution is highly radioactive, all samples are taken by means of the remotely operated equipment installed in the shielded, large and small equipment chambers. Fuel solution is drawn through the capillary tube connected to the loop main stream into the "standard drain volume" (see Sec. 4.7.1) located in the large equipment chamber. The solution in the "standard drain volume" is then isolated from the loop by valves, and the tank is vented to the gas holdup tank or directly to the reactor off-gas system, depending on the amount of radioactivity involved. The liquid sample is then transferred to an external sample tank (see Sec. 4.7.2), contained in a shielded carrier, by applying sufficient gas pressure (<50 psi) to force the solution through the interconnecting lines and valves.

Since the volume of the drain lines and valves connecting the loop and the "standard drain tank" is large compared with the volume of the solution sample, two purge samples, which consist principally of stagnant solution from these lines, are taken and discarded to the fuel weigh tank. The third drain volume removed from the loop is the one usually retained for chemical analyses.

Extreme care is exercised during the removal of a solution sample to prevent the possible escape of the highly radioactive fuel solution into the equipment chamber. During solution sampling, as well as during all other operations performed on the loop while it is in-pile, the operators (minimum of two required) follow a carefully detailed check list to avoid misoperation. A list of the various operations and an example of a check list are included in the appendix.

7.4.9 Fuel Addition

Fuel additions to the loop are made in order to replace the quantity removed in sampling or to change the fuel composition for experimental purposes. Fuel is added while the loop is operating at temperature and pressure by means of the addition system (described in Sec. 4.8), which is interconnected with the loop (Fig. 23). When a fuel sample is removed from the loop, some of the highly radioactive fuel solution remains in the lines and valves between the loop and the sample tank. Replacement fuel is therefore added to the loop immediately after a sample has been taken; this fresh solution flushes the lines used in sampling and reduces the radioactivity. In order to maintain a constant fuel inventory in the loop, the quantity of fuel added is carefully monitored by means of the calibration of the addition system made prior to the in-pile run.

Occasionally it is desirable to change the composition of the fuel solution in the loop without stopping fuel circulation. This is accomplished by removing a relatively large quantity of fuel; approximately 300 ml of solution can be removed without adversely affecting the loop operation. The amount removed is then replaced with fuel of a different composition from the addition system. It is also possible to stop fuel circulation and drain the loop completely and recharge it with fresh fuel. For this operation the reactor must be shut down.

7.4.10 Loop Draining and Rinsing

When a loop has completed an in-pile run, it is freed of most of the fission-product activity produced during the operation by draining and rinsing before removal from its in-pile position. (By removing the fission-product activity, the total activity of the loop is decreased substantially to minimize exposure of operating personnel during its removal, although the removal equipment provided for the loop contains enough shielding that the loop can be handled even if the fuel solution is not removed.) First, the fuel in the loop is drained to the fuel weigh tank (see Sec. 4.5) in the large equipment chamber. The tube through which fuel is drained is equipped with a water-cooled jacket so that high-temperature solution may be cooled during the draining operation. The fuel solution within the loop is maintained at a temperature of 180°C or above while draining so that any radiolytic gas generated as a result of fission-product radiation will continue to be recombined. Wash solutions are then added to the loop and circulated for a few minutes to flush any remaining fuel from the loop. The wash solutions are also drained into the fuel weigh tank. After a period of decay, the contents of the fuel weigh tank are removed and processed for uranium recovery.

Interconnected with the fuel weigh tank is a 40-liter gas-holdup tank (see Sec. 4.6), where most of the radioactive gases from the loop are collected and stored. This tank, also located in the shielded large equipment chamber, stores the gases until it is safe for them to be released into the off-gas system.

7.4.11 Emergency Drain

An emergency drain procedure is used if it is necessary or desirable to rapidly remove the fuel solution from the loop. For example, a rapid removal of the fuel solution would minimize the amount of radioactive solution discharged into the container if a leak occurred in the primary loop piping. In either event the loop is drained while at temperature and pressure. (For the normal drain, described above, the loop is cooled to about 180°C before draining.) Since it is anticipated that there is insufficient time for complete recombination of the radiolytic gas under these conditions, the gaseous contents of the loop are diluted with nitrogen gas immediately before dumping. This diluent is supplied from an emergency nitrogen tank maintained at a pressure 300 psi above that in the loop; the additional pressure also increases the rate of discharge of the fuel solution. By means of this procedure the fuel solution can be safely transferred from the loop to the fuel weigh tank in less than 5 min.

7.5 Removal Procedure

After the loop has been drained and rinsed, the small shielding door in front of the small equipment chamber is opened; all electrical and thermocouple leads are cut and moved to one side, and then the capillary tubes are clamped off in two places and cut between the two clamps. A carrier, shielded with lead and designed to contain the loop package, is placed in front of, and directly in

line with, the beam hole; the loop and shield-plug assembly is withdrawn partly from the beam hole and partly into the carrier. Ports in the carrier provide access to the connections between the loop and shield plug, and the tubing and thermocouple lines passing through the connector are cut and the connector is uncoupled to separate the loop and shield plug. The shield plug is then drawn out of the carrier while the loop is drawn the rest of the way into the shielded carrier, in which it is transported to hot-cell facilities for disassembly and examination. The shield plug, which is usually only mildly radioactive, is decontaminated and used on subsequent loops. The empty beam hole is then filled with a shield plug, which is left in place until another loop is ready for insertion. The removal of the loop from the reactor beam hole can usually be accomplished in less than 8 hr.

8. SUMMARY OF OPERATING EXPERIENCE

During October 1954, in-pile circulation of test solution was begun in the first loop, which operated for 465 hr. Since that time 17 other experiments have been completed. Seventeen loops have been operated in beam holes HB-2 and HB-4 of the LITR for an accumulated time of 19,466 hr; one loop was operated for 2741 hr in beam hole HN-1 of the ORR. The loops have all operated at temperatures of 250 to 300°C and at pressures from 1000 to 1600 psia. Although 9 of the 18 loop runs were terminated because of failure of the fuel circulating pump (see Sec. 8.1.6), all loops operated long enough for significant and reliable data to be obtained. Corrosion test specimens were retrieved from all the loops; and subsequent examination in remote-handling facilities, which included visual observation, weight-loss determinations, and metallographic examination, provided pertinent information on the effect of reactor radiation on corrosion rates of materials (primarily Zircaloy-2) of interest to the aqueous homogeneous program.[12]

Operating experience with the 18 loops is discussed in the following sections.

8.1 Loop and Components

8.1.1 Containment

The integrity of the loops with regard to containment of fuel solution at elevated temperature and pressure has been demonstrated; there was no incident of fuel leakage in any of the 18 loops.

8.1.2 Loop Heaters

The performance of the loop heaters has been excellent. No incident of heater malfunction or failure was encountered, and control of the loop temperatures was excellent.

8.1.3 Pressurizer Heaters

The pressurizer heater and the pressurizer-jacket heater have adequately maintained the pressurizer temperature to a degree sufficient to allow measurement of the partial pressures of steam, oxygen, and radiolytic gas.

[12] J. A. Lane, H. G. MacPherson, and F. Maslin, Eds., Fluid Fuel Reactors, Sections 5-5 and 5-6, p 232-248, Addison-Wesley, Reading, Mass., 1958.

Only one incident of heater failure occurred, and this was in the first in-pile experiment where one of the two heating elements in the main pressurizer heater failed very soon after insertion of the loop into the reactor; however, the remaining element had sufficient capacity to allow continuation of the run to its scheduled completion.

8.1.4 Loop Cooler

The several loop-cooler designs used have been entirely adequate in removing the fission and gamma heat generated within the loop. By using air, water, or mixtures of the two, a wide range of cooling capacity was possible and allowed the cooling rate to be varied as required for each loop experiment.

8.1.5 Core Cooler

A core cooler was incorporated only on the loop operated in the ORR. At the beginning of in-pile operation the cooling rate of the cooler was adjusted to remove approximately 1 kw of gamma heat from the core metal wall by use of an appropriate mixture of air and water as the coolant medium. After 350 hr of in-pile operation it became evident that the coolant circuit was partially plugged. Backwashing of the coolant tube was successful in removing this partial plug. However, after an additional 700 hr of operation the core-cooler circuit became almost completely plugged and could not be opened. There was some evidence that particulate matter was entering the coolant line, since flocculated material was observed passing through the rotameter used to monitor the water injection, even though the line contained two filters of 5-μ pore size.

Subsequent to removal from the reactor, the cooling circuit was tested in the remote-handling facility and was found to be open. Thus there is at present no explanation of the reason for the plugging. Future core coolers will contain tubing of larger diameter.

8.1.6 Circulating Pump

Nine of the 18 in-pile loop experiments were terminated as a result of circulating-pump malfunction or failure. In each case the pump was examined in the remote-handling facility, and the cause of failure was determined so that design improvements could be made on subsequent pumps.

These examinations revealed that the first two pump failures were the result of excessive wear of the bearings, which were made of Graphitar-14. Journal bushings of either Stellite 98M2 or 17-4 PH stainless steel, partially hardened, were used. This type of failure was attributed partially to the overhung rotor and single-bearing-journal design and partially to the bearing and journal materials.

The pump was redesigned so that two outboard bearings were press-fitted into the stainless steel housing, and at the same time pure sintered aluminum oxide was used for both the bearings and journal bushings. The first two redesigned pumps failed as a result of slippage of the aluminum oxide bearing in the housing, which reduced the axial clearance of the rotor; seizure occurred between the front and rear bearing thrust surfaces. This condition was corrected by mechanically pinning the bearings in the housings. That this corrected the problem is evidenced by the fact that 12 pumps incorporating these improvements have operated in-pile without bearing failure.

However, three of the twelve pumps that operated without bearing difficulty failed as a result of electrical breakdown of the stator windings. The pump stators which failed were wound for single-phase, 110-v current, and used class A insulation. The stator was redesigned for three-phase, 220-v current, and electrical insulation was changed to class H.

No pump failures of any description were encountered in the last three in-pile loop experiments. The pumps in these loops contained aluminum oxide bearings and journals, and three-phase, 220-v stator windings with class H insulation were used. The cumulative in-pile operating time of these three loops (which includes the ORR loop) was 6200 hr; thus it is felt that the pumps presently in use will give long-term, trouble-free service.

8.2 Auxiliary Equipment

The performance of the auxiliary equipment associated with each of the three in-pile loop facilities has been excellent. Although some difficulty has been encountered with the high-pressure valves (discussed below), no loop experiment was terminated as a result of failure or malfunction of any of the equipment in the small and large equipment chambers. There has been no incident of release of radioactive material from the system, even though several hundred highly radioactive samples of fuel solution have been removed from the loops and additions of fuel and oxygen gas were routinely made to each loop while it was operating at temperature and pressure in-pile.

8.2.1 Valves

Of the approximately 75 high-pressure valves required to perform the various operations, such as the removal of fuel samples and the addition of fuel, water, and gas, about 20 to 25 are considered "critical." The valves in this category are regularly used in the more hazardous operations of fuel sampling and additions. Thus these valves are used to transfer highly radioactive fuel solution, under pressure, to various tanks in the equipment chambers and must remain leak-tight throughout an in-pile experiment during which individual valves may be opened and closed 200 to 600 times. Some of these valves are normally exposed only to the fuel solution, while others are operated in a gaseous atmosphere.

All valve bodies and seats have been of either type 304 or type 316 stainless steel. For the first 17 loops, valve stems of hardened type 420 stainless steel were used, and these stems were rotated when the valve was opened or closed. Normally during each loop operation, some two to six valve failures occurred and these failures were generally of two types: (1) excessive corrosion of the stem material exposed to the fuel solution and (2) excessive galling between the plug and seat material. Although operation of the loop could be continued by making changes in the operating procedures, the failures were troublesome and also created a potential hazard.

Because of these failures a valve development program was initiated and resulted in changing the valve stem material to partially hardened 17-4 PH stainless steel, which was found to be more corrosion resistant to the fuel solution, and the incorporation of a nonrotating valve stem. Valves of this design were included in the ORR in-pile loop facility. That this type of valve was superior to the type originally used is indicated by the fact that not a single valve failure was encountered during 2700 hr of operation of the ORR in-pile loop.

8.2.2 Fuel Sampling Equipment

The performance of the fuel sampling equipment has been exceptional. Normally some 20 samples of fuel solution are removed from a loop during an in-pile experiment. Each sampling operation involves the taking of several purge samples to clear the lines of material held there. The sample or purge is first isolated in the "standard drain volume" located in the large equipment chamber, and the sample is then transferred to the sample container located outside the equipment chamber, while all purges are drained into the fuel weigh tank. There has been no escape of this highly radioactive material during any of the sample removals, the only difficulty being that occasionally an insufficient quantity of sample was obtained. This difficulty was corrected by improvements in the sampling procedure and did not require major alterations to the sampling equipment.

8.2.3 Fuel and Water Addition Systems

The fuel and water addition systems have allowed close control of the fuel inventory of each loop experiment, and the chemical composition of the fuel was changed without difficulty during several in-pile loop runs. On several occasions the loop was completely refueled after in-pile operation had commenced.

8.2.4 Gas Addition and Metering System

The oxygen addition and metering systems in the three facilities have been entirely adequate in maintaining the desired oxygen concentration in the loop experiments as well as providing the means of calculating over-all loop corrosion based on the amount of oxygen consumed.

8.2.5 Charcoal Traps

Since there is essentially no demand on the charcoal traps unless a large uncontrolled release of radioactivity is encountered, and since no such event occurred during operation of the ORR loop facility, which contained the traps, no real evaluation of these traps has been made.

8.2.6 Loop Retraction Mechanism

The retraction mechanism installed in the ORR loop facility proved to be extremely useful in obtaining data during the loop operation. When the loop was retracted, the fission and gamma heat generated in the loop core section was reduced to 10% of that encountered in the fully inserted position; this was adequate for providing a comparison of loop operation in and out of reactor radiation without requiring a reactor shutdown. During the experiment, the loop was retracted a total of 28 times; no mechanical difficulties were encountered.

8.3 Instrumentation

The instrumentation associated with the in-pile loop is quite complex (see Sec. 5), and exceptional reliability and accuracy are required of this instrumentation. The instruments used have been essentially standard types, common to all operations where close control of temperature and pressure is required. However, in order to ensure maximum accuracy and reliability, the instruments are carefully selected for their accuracy and are routinely checked during operation.

Considering the number of instruments used, the instrument difficulties have been quite negligible. A survey of 10 in-pile loop experiments in the LITR, covering 11,000 hr of loop operation, showed that 20 unscheduled reactor shutdowns of 15 min or more were caused by the in-pile loops. Twelve of these shutdowns were caused by instrument malfunction, and eight resulted from abnormal loop conditions. Of the 12 instrument failures, only one was noted in the eight electronic potentiometers used for temperature, pressure, and pump and pressurizer-heater power monitoring circuits. The remaining 11 instrument failures were confined to the six radiation monitors (ion chambers and d-c electrometers).

The instrumentation detected and gave the appropriate corrective action (reactor power reduction) for every abnormal condition which occurred during the 10 experiments. Of the eight abnormal conditions recorded, five were circulation failure caused by pump malfunction (see Sec. 8.1.6).

9. COST SUMMARY

A breakdown of costs for the in-pile loop facilities at the LITR and ORR is given in Table 2 (loop not included). Included in these costs are the instrument and control panels, beam-hole liners, shield plugs, shielded carriers, equipment chambers, and auxiliary equipment permanently installed at the reactor site.

Table 2. Summary of Costs of LITR Facilities, HB-4 and HB-2, and ORR Facility, HN-1
(Costs include materials, labor, and overhead)

	HB-4 Facility	HB-2 Facility	HN-1
Design	$ 56,300	$ 18,000	$ 63,000
Instrumentation	61,000	45,000	95,000
Fabrication and installation	172,700	147,000	152,000
Total	$290,000	$210,000	$310,000

The lower costs of the HB-2 facility reflect the fact that it was a duplicate of the HB-4 facility, which reduced the number of new design drawings required and, as a result of experience with the HB-4 facility, reduced the fabrication and installation costs.

The higher costs of the facility in beam hole HN-1 of the ORR resulted from the fact that more extensive modifications to the beam hole were required to adapt it to the loop package, and a loop retraction mechanism was added. Also, the instrument and control panel included additional instrumentation to provide for "dual-track" safety interlocking of all safety circuits with the reactor. A dual-track safety interlock makes use of two independent circuits, one of which operates on contact closure (make-up) and one on contact break (dropout). Make-up and dropout ensures that safety action of the control system is not voided by the occurrence of shorts or open circuitry. The $95,000 for instrumentation was for two complete instrument panels: one for the ORR facility and one for a mockup facility used to test-operate all loops before installation in the reactor.

Table 3 presents the costs for a typical, bare in-pile loop and represents the cost of the loop which is fabricated for each experiment. All loop and pump components are machined, tested, and assembled by ORNL personnel.

Table 3. Summary of Approximate Costs for a Typical, Bare In-Pile Loop
(Does not include costs of component testing and final loop testing)

Loop (minus pump):	Materials	$ 350	
	Machining	2,200	
	Assembly	3,200	
			$5,750
Pump:	Materials		
	Aluminum oxide bearings	$ 100	
	Aluminum oxide journals	100	
	Stator	20	
	Stainless steel	75	
	Machining	1,300	
	Assembly	640	
			2,235
Loop and Pump Total			$7,985

10. APPENDIX

Check List Used for Oxygen Addition to Loop

The detailed, stepwise check list which is followed in making an oxygen addition to the loop during in-pile operation is included here as an illustration of the complexity of operational procedures for an in-pile loop. The prefixes V, P, RD, and T indicate valve, pressure, radiation detection, and temperature, respectively, and identification numbers are those shown on flowsheet in Fig. 23 and thermocouple location diagram, Fig. 39. This check list indicates the extreme care that is taken to prevent misoperation.

These operations are carried out by two operators--one performs the manual operations required, such as opening and closing valves, and the other observes these operations and initials the check list. Upon completion of each operation, the check list is filed for future reference, and a new sheet is used for subsequent operations. These detailed check lists are used in carrying out all normal and emergency operations required in the operation of the experiment. The following is a list of written procedures covering all expected operations:

1. Loop startup, out-of-pile.
2. Loop shutdown, out-of-pile.
3. Pressure-cell calibration.
4. Insertion of loop into beam hole.
5. Instrument interlock check-out.
6. Fuel weigh tank calibration.
7. Oxygen balance sheet during operation.
8. Oxygen addition to loop.
9. Water expansion into loop.
10. Fuel sample removal from loop.
11. Operation of loop, out-of-pile.
12. Fuel expansion into loop.
13. Fission and gamma heat measurement.
14. Pressurizer flow measurement.
15. Recombination of radiolytic gas measurement.
16. Normal loop drain procedure.
17. Emergency loop drain procedure.
18. Loop removal from reactor.
19. Gas flush of fuel weigh tank.
20. Sample from fuel weigh tank using sample tank.
21. Sample from fuel weigh tank using glass centrifuge cones.
22. Fuel transfer from weigh tank to removal tank.
23. Equipment maintenance between experiments.

DETAILED PROCEDURE AND CHECK LIST TO BE FOLLOWED DURING IN-PILE OPERATION WHEN ADDING OXYGEN TO LOOP

Oxygen Addition to Loop No. _____

Date: _____
Operator: _____
Recorder: _____
Pump time meter at start of O_2 add.: _____
Loop operating hr: _____

	Operator's Initials	Instrument Readings
I. OXYGEN ADDITION TO ADDITION AND METERING TANK		
A. The following steps (1 through 8) involve flushing of lines with oxygen.		
1. Check to see that all valves are closed except V-53 (loop container off-gas) and V-205 (equipment chamber off-gas).	_____	
2. Adjust oxygen pressure on oxygen header to 300 psi above loop pressure by means of regulator on oxygen station and opening V-510; close V-510.	_____	Header Press._____
3. Flush contents of header to off-gas by opening V-38, 40, 44, 46, and 56 in off-gas line. (If radioactivity is noted by an increase in RD-1 reading, V-1 to loop is probably not leak-tight.)	_____	
4. Close V-40 in off-gas line.	_____	
5. Again refill header with oxygen as in step 2 by opening V-510; close V-510.	_____	Header Press._____
6. Vent to off-gas by opening V-40; close V-40.	_____	
7. Refill header with oxygen for third flush by again opening V-510; close V-510.	_____	Header Press._____
8. Vent to off-gas by opening V-40; close V-40.	_____	
B. The following steps (9 through 13) are to fill the oxygen addition and metering tank with oxygen.		
9. Close valves 38, 44, 46, and 56.	_____	

	Operator's Initials	Instrument Readings
10. Adjust voltage on strain-gage pressure cell P-4 on addition tank.	_____	K Factor_____ Zero Set Point_____
11. Open V-37 on addition tank and V-510 on oxygen header. Oxygen pressure on header pressure gage should be 300 psi above loop temperature.	_____	Header Press._____
12. Slowly open V-38, which allows oxygen to enter the addition tank, until addition tank pressure (P-4) is at least 100 psi above loop pressure; then close V-38.	_____	P-4_____
13. Close V-510 on oxygen header.	_____	

II. TRANSFER OF OXYGEN FROM ADDITION TANK TO LOOP (Loop must be in retracted position in ORR or reactor must be shut down in LITR before proceeding.)

A. Record in the space below the data as noted (loop pressure and temperature, addition tank pressure and temperature) at 2-min intervals until all readings are steady.

Time	Pressurizer Pressure (P-1)	Pressurizer Temperature (TC-10)	Pressurizer Temperature (TC-9)	Addition Tank Pressure (P-4)	Addition Tank Temperature
____	_____	_____	_____	_____	_____
____	_____	_____	_____	_____	_____
____	_____	_____	_____	_____	_____
____	_____	_____	_____	_____	_____

P-4 average . . . . . _____
Amount of O_2 to be added . . . . . _____
Expected addition tank pressure (P-4) after addition . . . . _____

B. Addition of oxygen. CAUTION: P-4 must be at least 100 psi higher than P-1.

1. During this operation watch RD-1. An increase in radiation intensity indicates a loop pressure higher than the addition tank pressure, and V-1 should be closed immediately. Watch P-4 and bleed in the required amount of oxygen using V-1; then CLOSE V-1. _____

2. Check V-1 for tightness. _____

C. Obtain accurate addition tank pressure. Record readings as before on 2-min intervals. Begin readings immediately in order to detect leaks. Pressures and temperatures obtained here and before addition (II-A) are used to accurately determine the amount of oxygen added to the loop.

Pump Time Meter_____
Hours Circ._____

Time	Pressurizer Pressure (P-1)	Pressurizer Temperature (TC-10)	Pressurizer Temperature (TC-9)	Addition Tank Pressure (P-4)	Addition Tank Temperature

D. CLOSE V-37. _____

E. Fill capillary tubing used in oxygen addition with water by using the procedure, "Water Expansion to Gas Addition Line." Reactor may be brought to power (LITR) or loop inserted (ORR) before making the water expansion.

ORNL-2977
UC-38 — Equipment, Methods,
and Techniques
TID-4500 (15th ed.)

INTERNAL DISTRIBUTION

1. HRP Director's Office
   Rm. 259, Bldg. 9204-1
2. G. M. Adamson
3. A. L. Bacarella
4. J. N. Baird
5. J. E. Baker
6. J. M. Baker
7. S. J. Ball
8. J. C. Banter
9. S. E. Beall
10. A. M. Billings
11. D. S. Billington
12. E. G. Bohlmann
13. S. E. Bolt
14. N. C. Bradley
15. J. R. Brown
16. W. D. Burch
17. C. E. Center
18. R. H. Chapman
19. R. A. Charpie
20. R. D. Cheverton
21. R. S. Cockreham
22. H. C. Claiborne
23. E. L. Claiborne
24. F. W. Cooke
25. F. L. Culler
26. D. G. Davis
27. R. J. Davis
28. V. A. DeCarlo
29. L. B. Emlet (K-25)
30. J. L. English
31. D. E. Ferguson
32. C. H. Gabbard
33. W. R. Gall
34. R. B. Gallaher
35. J. C. Griess
36. W. R. Grimes
37. P. A. Haas
38. P. H. Harley
39. C. S. Harrill
40. P. N. Haubenreich
41. D. N. Hess
42. J. W. Hill
43. E. C. Hise
44. A. Hollaender
45. G. H. Jenks
46. D. T. Jones
47. W. H. Jordan
48. P. R. Kasten
49. G. W. Keilholtz
50. C. P. Keim
51. M. T. Kelley
52. N. A. Krohn
53. C. G. Lawson
54. W. H. Lewis
55. S. C. Lind
56. R. S. Livingston
57. R. A. Lorenz
58. M. I. Lundin
59. R. N. Lyon
60. T. H. Mauney
61. W. L. Marshall
62. J. P. McBride
63. H. F. McDuffie
64. H. A. McLain
65. R. A. McNees
66. J. R. McWherter
67. G. E. Moore
68. R. L. Moore
69. C. S. Morgan
70. K. Z. Morgan
71. J. P. Murray (Y-12)
72. M. L. Nelson
73. P. D. Neumann
74. A. R. Olsen
75. L. F. Parsly, Jr.
76. F. N. Peebles
77. D. Phillips
78. M. L. Picklesimer
79. J. L. Redford
80. S. A. Reed
81. W. D. Reel
82. P. M. Reyling
83. L. Rice
84. D. M. Richardson
85. R. C. Robertson
86. J. A. Russell
87. H. C. Savage

88. C. H. Secoy
89. C. L. Segaser
90. E. D. Shipley
91. A. J. Shor
92. M. J. Skinner
93. A. H. Snell
94. I. Spiewak
95. J. A. Swartout
96. E. H. Taylor
97. D. G. Thomas
98. M. Tobias
99. W. E. Unger
100. R. Van Winkle
101. F. J. Walter
102. R. M. Warner
103. G. M. Watson
104. A. M. Weinberg
105. J. F. Winesette
106. C. E. Winters
107. L. F. Woo
108–109. REED Library
110–111. Central Research Library
112–113. ORNL – Y-12 Technical Library, Document Reference Section
114–133. Laboratory Records Department
134. Laboratory Records, ORNL R.C.

EXTERNAL DISTRIBUTION

135. A. L. Benson, AEC, Oak Ridge
136. D. H. Groelsema, AEC, Washington
137–592. Given distribution as shown in TID-4500 (15th ed.) under Equipment, Methods, and Techniques category (75 copies – OTS)