MARTIN MARIETTA ENERGY SYSTEMS LIBRARIES
3 4456 0361499 8

CENTRAL RESEARCH LIBRARY
DOCUMENT COLLECTION

ORNL-2952
UC-10 - Chemistry-Separation Processes
for Plutonium and Uranium

RECOVERY OF URANIUM FROM DI(2-ETHYLHEXYL)PHOSPHORIC ACID (DAPEX) EXTRACTANT WITH AMMONIUM CARBONATE

F. J. Hurst
D. J. Crouse

CENTRAL RESEARCH LIBRARY
DOCUMENT COLLECTION
LIBRARY LOAN COPY
DO NOT TRANSFER TO ANOTHER PERSON
If you wish someone else to see this document, send in name with document and the library will arrange a loan.

OAK RIDGE NATIONAL LABORATORY
operated by
UNION CARBIDE CORPORATION
for the
U.S. ATOMIC ENERGY COMMISSION

Printed in USA. Price $0.50. Available from the

Office of Technical Services
Department of Commerce
Washington 25, D.C.

LEGAL NOTICE

This report was prepared as an account of Government sponsored work. Neither the United States, nor the Commission, nor any person acting on behalf of the Commission:

A. Makes any warranty or representation, expressed or implied, with respect to the accuracy, completeness, or usefulness of the information contained in this report, or that the use of any information, apparatus, method, or process disclosed in this report may not infringe privately owned rights; or

B. Assumes any liabilities with respect to the use of, or for damages resulting from the use of any information, apparatus, method, or process disclosed in this report.

As used in the above, "person acting on behalf of the Commission" includes any employee or contractor of the Commission, or employee of such contractor, to the extent that such employee or contractor of the Commission, or employee of such contractor prepares, disseminates, or provides access to, any information pursuant to his employment or contract with the Commission, or his employment with such contractor.

ORNL-2952

Contract No. W-7405-eng-26

CHEMICAL TECHNOLOGY DIVISION
Chemical Development Section C

RECOVERY OF URANIUM FROM DI(2-ETHYLHEXYL)PHOSPHORIC ACID (DAPEX) EXTRACTANT WITH AMMONIUM CARBONATE

F. J. Hurst and D. J. Crouse

DATE ISSUED

JUN 30 1960

OAK RIDGE NATIONAL LABORATORY
Oak Ridge, Tennessee
Operated by
UNION CARBIDE CORPORATION
for the
U. S. ATOMIC ENERGY COMMISSION

MARTIN MARIETTA ENERGY SYSTEMS LIBRARIES

3 4456 0361499 8

ABSTRACT

A process was developed through bench-scale for recovering uranium from di(2-ethylhexyl)phosphoric acid-kerosene (Dapex) extractant with ammonium carbonate solution. The solvent is modified with diamyl amylphosphonate to enhance uranium extraction and to prevent separation of the ammonium di(2-ethylhexyl)phosphate from the kerosene diluent during stripping. The ammonium carbonate concentration is maintained in the range 0.9-1.6 M, and the strip solution is recycled in order to precipitate ammonium uranyl tricarbonate (AUT) in the stripping system. The crystalline AUT settles and filters rapidly and is readily converted to U_3O_8 by calcination at 300-500°C. In continuous tests, complete stripping of uranium and contaminants and favorable physical operation were obtained over a wide range of recycle solution composition. Excellent separation of uranium from extracted molybdenum and partial separation from extracted vanadium occurred in the precipitation step.

Estimated reagent costs for the process are 2-4¢ lower than for the sodium carbonate stripping process now used in western mills. In addition, owing to the lower molybdenum and negligible sodium content, the concentrate should be more amenable to the direct reduction-hydrofluorination-fluorination process for producing UF_6.

CONTENTS

		Page
1.0	Introduction	4
2.0	Solubility of Ammonium Uranyl Tricarbonate	5
3.0	Calcination of Ammonium Uranyl Tricarbonate	7
4.0	Proposed Process	7
5.0	Continuous Tests	9
	5.1 Recovery of Uranium from the Bleed Solution	16
6.0	Reagent Costs	17
7.0	References	18
8.0	Appendix	19
	8.1 Description of Equipment	19

1.0 INTRODUCTION

In the new feed plant operated by Allied Chemical Company, UF_6 is produced by direct reduction-hydrofluorination-fluorination of concentrates received from uranium mills. Since sodium, molybdenum, and vanadium are troublesome in this process there is interest in producing concentrates low in these contaminants. This report describes development of an economical stripping flowsheet for the di(2-ethylhexyl)phosphoric acid extraction (Dapex) process which yields a uranium concentrate of the type desired.

In the Dapex process[1-4] (Fig. 1.1), as now used in four western mills, uranium is stripped from the di(2-ethylhexyl)phosphoric acid (D2EHPA) with sodium carbonate solution. To prevent separation of the sodium di(2-ethylhexyl)phosphate from the kerosene diluent in the stripping cycle, the solvent is modified with either a long-chain alcohol or an organophosphorus ester, the latter modifier class also providing synergistically enhanced extraction of uranium. Uranium is precipitated from the strip solution by destroying the carbonate with acid and adding ammonia or magnesia to pH ~8. Little or no separation from extracted molybdenum and vanadium is obtained in the stripping and precipitation steps and the concentrate contains appreciable sodium.

The feasibility of stripping uranium from Dapex solvent with 0.55 M $(NH_4)_2CO_3$ was previously[2] demonstrated in bench-scale continuous equipment. Uranium was recovered by distilling ammonia and carbon dioxide from the pregnant strip solution with steam, but separations from molybdenum and vanadium by this procedure were not investigated. In the course of these studies it was noticed that a rapid-filtering crystalline uranium precipitate, presumably ammonium uranyl tricarbonate (AUT), formed when stripping with ~1 M ammonium carbonate. This suggested the possibility of precipitating uranium directly from the solvent by contacting it with a relatively concentrated (>1 M) ammonium carbonate solution saturated with uranium. The present studies have been concerned with development of a stripping flowsheet based on this principle. The effect of ammonium carbonate concentration on uranium solubility was first determined, and then a series of bench-scale continuous tests was made to define optimum operating conditions and the effect of contaminants such as molybdenum, iron, and vanadium. Reagent costs were estimated on the basis of the continuous tests.

This stripping method is also applicable to the recovery of uranium from amines and possibly from organophosphorus esters, e.g., TBP and phosphonates. Results of studies of these systems will be reported separately.

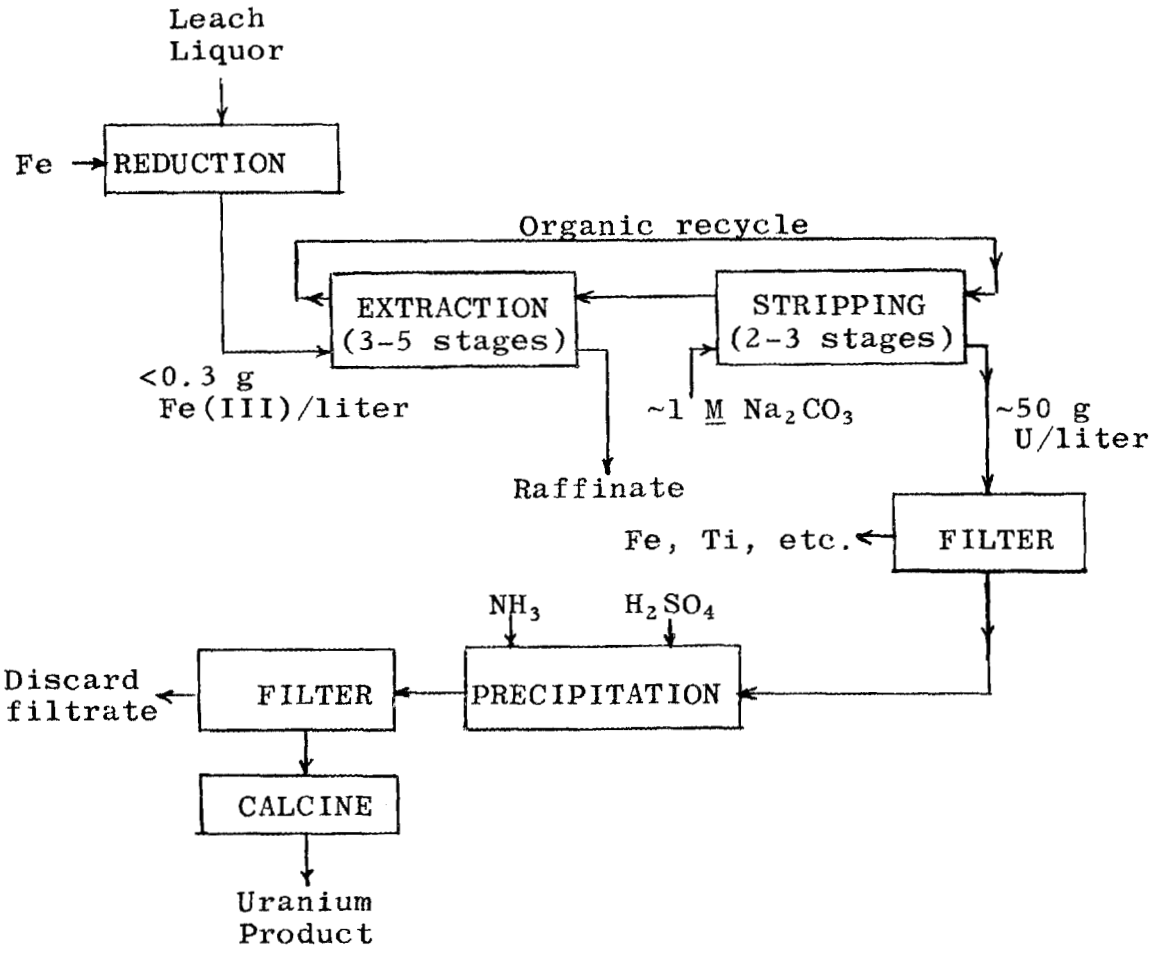

Fig. 1.1. Dapex sodium carbonate stripping process. Organic: ~0.1 M D2EHPA in kerosene + 0.1 M TBP or 0.1 M isodecanol.

The authors acknowledge the helpful contribution of L. L. Lohr, Jr., a summer student employee, who set up the continuous test equipment and performed some of the continuous test runs.

2.0 SOLUBILITY OF AMMONIUM URANYL TRICARBONATE (AUT)

The solubility of uranium decreased from approximately 7.0 to 1.8 g per liter as the ammonium carbonate concentration was increased from 0.75 to 1.95 M (Fig. 2.1). The tests were made by shaking an excess of solid AUT with ammonium carbonate solutions (prepared by adding sufficient ammonium hydroxide to a solution of commercial ammonium carbonate to give an $NH_4^+/CO_3^=$ ratio of 2/1). Analyses made at intervals over a 54-day period indicated that the solu-

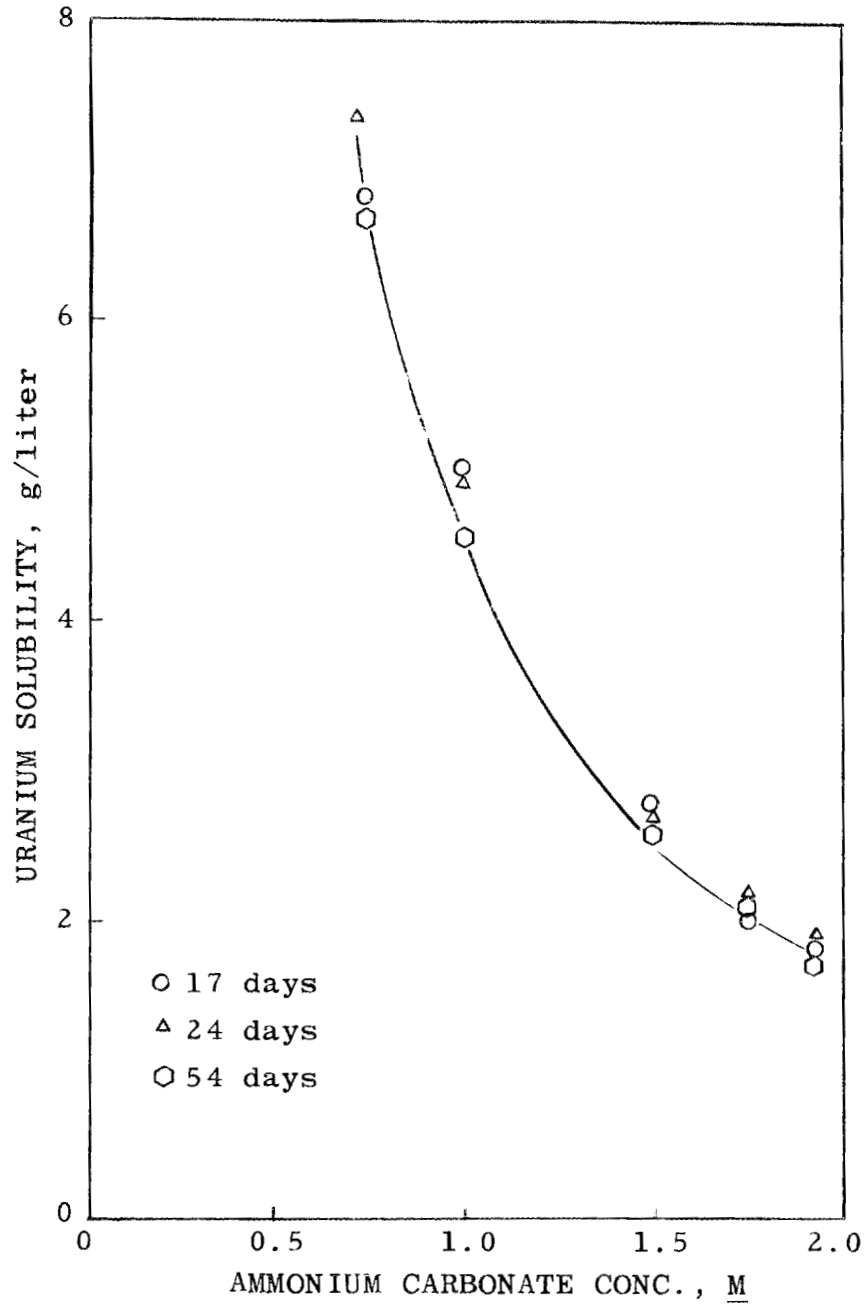

Fig. 2.1. Solubility of ammonium uranyl tricarbonate in ammonium carbonate solutions at 25°C.

tions were at or near equilibrium at the end of the test. These solubility values are lower than those obtained in continuous runs (Sec. 5.0), indicating that equilibrium was not reached in the relatively short contact times of the continuous tests. At the end of the solubility tests, the specific gravity and pH of the solutions were measured.

The specific gravity (25°C) increased from 1.032 to 1.060 and the pH increased from 9.17 to 9.22 as the ammonium carbonate concentration was increased from 0.75 to 1.95 M.

3.0 CALCINATION OF AMMONIUM URANYL TRICARBONATE

Calcination for 1-2 hr at 250°C lowered the carbonate concentration of air-dried AUT (12.4% NH_3, 51.7% U_3O_8, 34.1% CO_3) below the specification limit (4% based on U_3O_8) for uranium concentrates (Table 3.1). Products containing >97% U_3O_8, <0.05% NH_3, and <0.5% CO_3 were obtained by calcination for 1-2 hr at 500°C.

Table 3.1 Thermal Decomposition of Ammonium Uranyl Tricarbonate

Calcination Temp., °C	Calcination Time, hr	Final Color	Analysis, % U_3O_8	Analysis, % NH_3	Analysis, % CO_3
Air-dried	-	-	51.7	12.4	34.1
110	2	Yellow	54.6	12.0	32.7
	24	Light orange	72.3	2.5	15.1
250	1	Orange	90.1	1.4	2.2
	2	Orange	90.9	0.9	2.1
325	1	Orange-brown	94.6	0.3	1.4
	2.5	Orange-brown	94.1	0.2	1.4
400	1.25	Orange-brown	94.9	0.02	1.0
	2	Orange-brown	94.9	0.04	1.2
500	1	Black	97.3	0.02	0.40
	2	Black	98.2	0.02	0.28

4.0 PROPOSED PROCESS

A general flow diagram for the ammonium carbonate stripping process is shown in Fig. 4.1. Uranium and extracted contaminants are quantitatively removed from the extract by contacting it with 1.2-1.5 M $(NH_4)_2CO_3$ solution, most of the uranium precipitating as AUT. The precipitate slurry is pumped to a settling tank where the AUT settles rapidly and is pumped as a thick slurry to a filter. The filter cake is washed with a small volume of 1 M NH_4OH and calcined for 1-2 hr at 300-500°C to remove ammonia and

carbon dioxide. The filtrate and the supernatant from the settler are recycled to the stripping system after fortification with ammonia and carbon dioxide. Molybdenum (and to some extent vanadium) builds up in concentration in the ammonium carbonate recycle solution and is removed in a small bleed stream. A small amount of water is added to the stripping circuit to replace that lost to the bleed stream and by hydration of the ammonium salt of D2EHPA (~13 moles H_2O per mole of D2EHPA).

Stoichiometric chemical requirements for stripping and precipitation are 1 mole of ammonia per mole D2EHPA plus 4 moles of ammonia and 3 moles of carbon dioxide per mole of uranium recovered. For 0.1 M D2EHPA, loaded to 5 g of uranium per liter, this amounts to 0.53 lb of ammonia and 0.47 lb of carbon dioxide per pound of U_3O_8. In practice, requirements are 10-20% higher than stoichiometric to compensate for losses to the bleed solution and by entrainment of strip solution in the solvent.

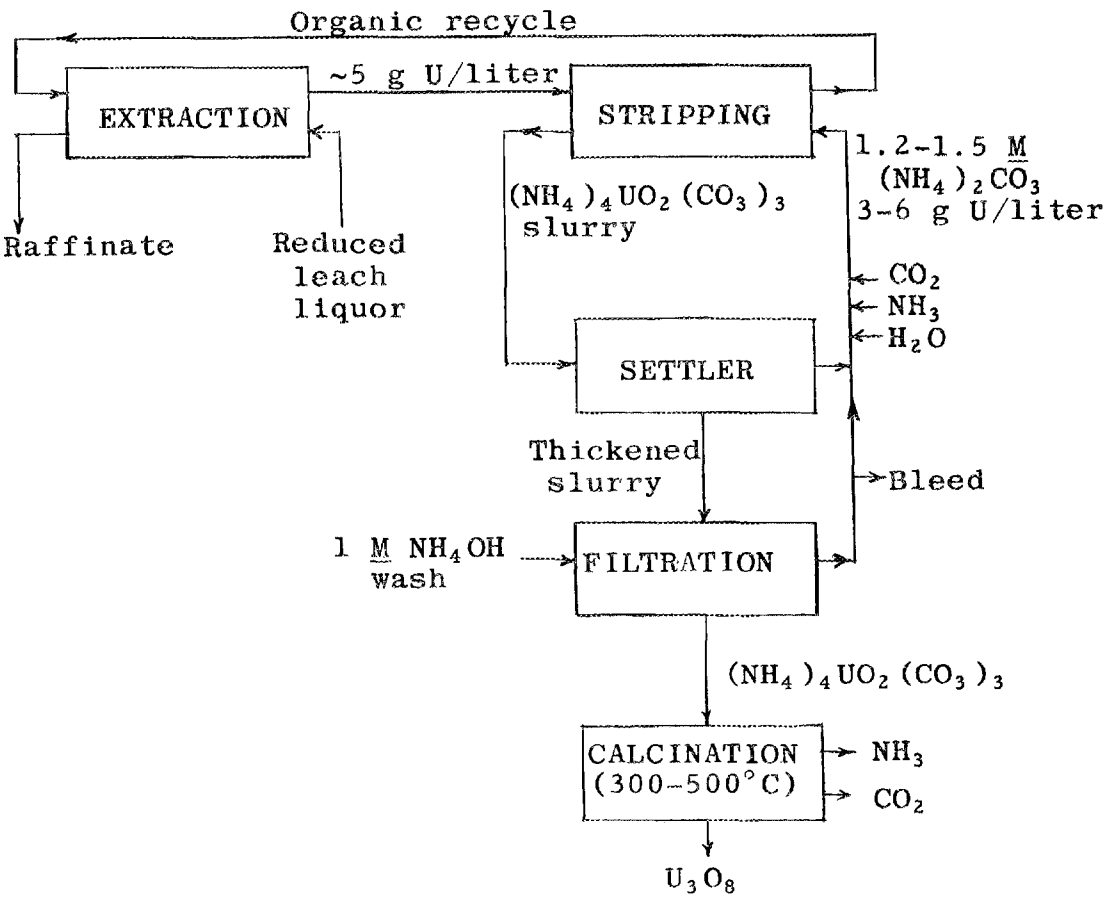

Fig. 4.1. Ammonium carbonate stripping process. Organic: D2EHPA in kerosene + organophosphorus or alcohol modifier.

5.0 CONTINUOUS TESTS

A series of continuous tests was made in bench-scale mixer-settler equipment with synthetic leach liquors to study the effects of numerous variables on the stripping process and to establish reagent costs. Stripping was effective and physical operation was satisfactory over a relatively wide range of recycle solution and feed liquor compositions. Highly effective separation from molybdenum and partial separation from vanadium were obtained in the precipitation step.

In all tests the organic phase consisted of 0.1 M D2EHPA in kerosene + 0.05 M diamyl amylphosphonate (DAAP). Modifier requirements to ensure miscibility of the ammonium salt[2] of D2EHPA in kerosene in the stripping operation are much lower than for the sodium salt. The concentration of DAAP used was about 80% of the minimum concentration[5] required to maintain miscibility when sodium carbonate is used for stripping but was the approximate concentration that produces maximum synergistic enhancement of uranium extraction. In all the continuous runs subsequently described, physical operation of the extraction circuit (3 stages) was satisfactory and low-uranium-concentration raffinates (<0.003 g of uranium per liter) were obtained. Detailed extraction data were not obtained since the function of the extraction system was simply to supply extract for the stripping studies.

Run 1. This was a shakedown run of ~18 hr* duration using a uranyl sulfate—sodium sulfate solution (5 g of uranium and 48 g of SO_4 per liter, pH 1) as aqueous feed. The solvent was loaded to ~5 g of uranium per liter. The stripping system included a single mixer-settler stage and a reservoir for decanting the recycle solution from the AUT product:

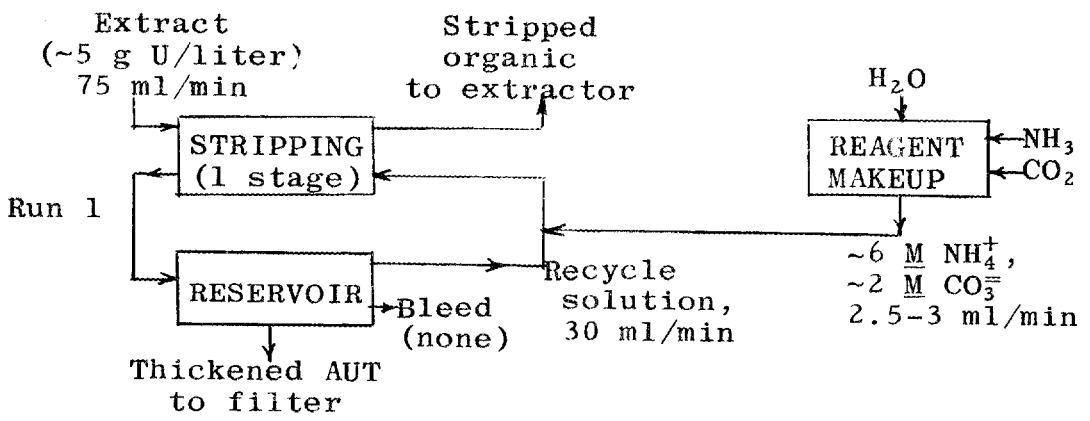

*This was the total run time rather than the continuous span of the run since the system was operated only on the day shift.

Both the settler and reservoir had conical bottoms and the settler was equipped with a slow-turning agitator (in the bottom portion of the cone) to ensure proper discharge of solids. The concentration of the ammonium carbonate solution in the settler and reservoir was 1.5 M at startup and was maintained at approximately that level throughout the run by addition to the recycle solution of approximately 2 M $(NH_4)_2CO_3$—2 M NH_4OH solution which was prepared continuously by dissolving ammonia and carbon dioxide gases in water. The concentration of uranium in the recycle solution increased to ~3 g per liter and became stabilized at that value.

Stripping of uranium was essentially complete, filtered samples of the stripped solvent analyzing <0.005 g of uranium per liter. Mixing was organic-continuous. The bulk of the phases separated rapidly but entrainment of aqueous in the solvent recycle stream was relatively high. Although this had no adverse effect on physical performance, it increased the consumption of stripping reagent. The AUT precipitate settled rapidly (to a concentration in the thickened slurry of ~450 g of uranium per liter) in the settler, leaving a clear interface, and was readily filtered. Entrainment of organic in the precipitate slurry appeared negligible. The air-dried AUT precipitate analyzed 12.4% NH_3, 43.8% U, and 34.1% CO_3, equivalent to an $NH_3/U/CO_3$ mole ratio of 3.96/1.00/3.09.

For about one-fourth of the run, the temperature in the stripping circuit was maintained at ~40°C. The higher temperature did not decrease aqueous entrainment in the solvent and resulted in production of relatively fine-particle AUT which did not settle as rapidly as the coarse AUT obtained at ambient temperature.

Run 2 (~20 hr duration). The aqueous feed for this run was a synthetic leach liquor (pH 1) containing 5 g of U, 1 g of V(IV), 2 g of Fe(II), 0.2 g Fe(III), 3 g of Al, 1 g of PO_4, and 30 g of SO_4 per liter. A second stripping stage was added to the circuit, mixing in this stage being controlled aqueous-continuous to decrease aqueous entrainment in the stripped solvent:

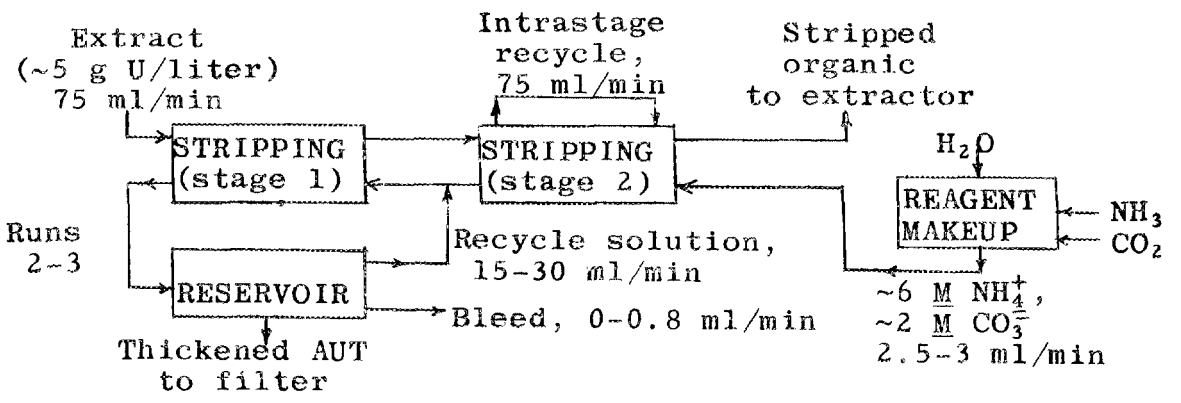

Since the organic/aqueous feed ratio to this stage was 25/1, it was necessary to recycle aqueous from the settler to the mixer to maintain the aqueous phase continuous. Under these conditions, aqueous entrainment in the stripped solvent was decreased considerably below that which occurred in run 1 but was still appreciable.

There was no bleed of recycle solution in runs 1 and 2 and, consequently, the volume of solution in the reservoir continuously increased.

The composition of the recycle solution was not critical. Physical operation was favorable and stripping of uranium and contaminants was essentially complete when the carbonate concentration was ~1.2 M and the $NH_4^+/CO_3^=$ ratio in the solution was varied from ~1.4/1 (pH 8.2) to ~2.3/1 (pH 9.6). Almost all the extracted uranium, vanadium, and iron were stripped in the first stage:

Organic Sample	Organic Analysis, g/liter		
	U	V	Fe
Extract	5.1	0.05	0.07-0.09
First stripping stage	0.007-0.017	<0.01	<0.01
Second stripping stage	0.002	<0.01	<0.01

The product from run 2 was not analyzed.

Run 3 (57 hr duration). The composition of the feed liquor for run 3 was the same as for run 2 except that 0.15 g of molybdenum per liter was added and the Fe(III) content was varied during the run. More than 95% of the molybdenum in the feed liquor was extracted but <2% of this molybdenum reported to the uranium product.

The solution remaining in the reservoir and stripping system from runs 1 and 2 was discarded and replaced with fresh ammonium carbonate solution. The carbonate concentration in the recycle solution was varied from 1.55 to 0.9 M while maintaining the $NH_4^+/CO_3^=$ ratio in the range 1.7-2.0/1. Throughout the run, stripping of uranium and contaminants was virtually complete and physical operation was good. A material balance for the run showed that consumption of ammonia and carbon dioxide was <10% in excess of stoichiometric requirements (Sec. 4.0). The average uranium concentration in the recycle solution increased from ~4 to ~11 g/liter as the ammonium carbonate concentration changed from 1.55 to 0.9 M (Table 5.1). Owing to supersaturation effects, the uranium concentration was higher than would be predicted from Fig. 2.1 and, for each carbonate concentration, varied over a relatively wide range at different sampling times.

Table 5.1 Effect of Ammonium Carbonate Concentration on Uranium Solubility (data from Run 3)

Recycle Solution Composition, M		Uranium in Recycle Solution, g/liter	
NH_4^+	$CO_3^=$	Range	Avg[a]
3.07	1.55	3.1- 5.1	4.2
2.42	1.35	4.7- 7.5	5.9
2.27	1.20	6.6- 8.9	7.8
1.84	1.05	7.1- 9.4	8.1
1.59	0.90	8.5-13.2	10.5

[a]Of four to six samples.

Molybdenum, which is soluble in the recycle solution, continuously increased in concentration during the run to 4.4 g/liter. The recycle solution bleed (0.8 ml/min) was insufficient so that there was a continuous increase (~0.8 ml/min) in the volume of solution in the reservoir.

During run 3 the concentration of iron in the extract was increased from 0.04 to 0.13 g/liter by increasing the Fe(III) in the feed liquor from <0.1 to 0.4 g/liter. This had no apparent effect on physical operation of the stripping circuit but increased the iron content of the product (calcined 2 hr at 500°C):

Fe(III) in Feed Liquor, g/liter	Fe in Extract, g/liter	Fe in Product, % based on U_3O_8	HNO_3 Insoluble[6] Uranium, % based on U_3O_8
<0.1	0.04	0.35	0.00006
0.2	0.11	1.4	0.007
0.4	0.13	2.3	0.011

The nitric acid—insoluble uranium in the product increased with increasing iron concentration but in all cases was far below the concentrate specification limit of 0.1%.

In the above tests no attempt was made to separate the precipitated iron from the AUT. It appeared, however, that some hydraulic separation might be possible since the AUT settled rapidly and the iron slowly.

The concentration of vanadium in the extract ranged from 0.02 to 0.03 g/liter, a portion of this vanadium precipitating with the uranium and the balance remaining soluble in the recycle solution. The average V_2O_5 content of six batches of product was 0.3% and the maximum 0.7%, which is well below the specification limit of 2%:

Product Batch	V in Extract, g/liter	V_2O_5 in Product, % based on U_3O_8
1	0.03	<0.1
2	0.03	0.42
3	0.02	0.71
4	0.03	0.22
5	0.02	0.27
6	0.02	0.13

The products also contained 95-97% U_3O_8, 0.005-0.03% Mo, 0.35-2.3% Fe, <0.01% NH_3, 0.2-0.5% CO_3, 0.01-0.09% PO_4, and <0.1% SO_4.

Run 4 (18 hr duration). The method used in runs 2 and 3 for adding makeup stripping reagent required preparation of a concentrated $(NH_4)_2CO_3$—NH_4OH solution for feed to the second stage. The volume of recycle solution in the reservoir built up during these runs and, in process practice, a relatively large bleed (2-3% of the organic flow rate) would be necessary to maintain a volume balance. In runs 4 and 5, ~0.5 M $(NH_4)_2CO_3$ was fed to the second stage and the bulk of the ammonia and carbon dioxide were added by absorbing the gases in the solution contained in the reservoir:

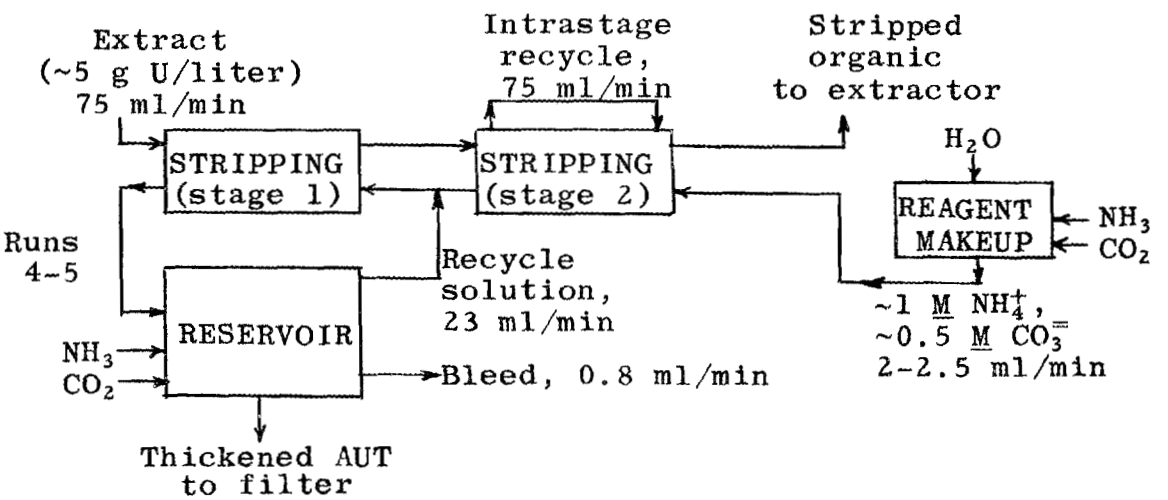

This procedure made the choice of aqueous flow rate to the second stage (and thus the amount of bleed) independent of reagent requirements, and volume control was simple. The bleed was set at approximately 1% of the organic flow rate and the flow of 0.5 M $(NH_4)_2CO_3$ was adjusted to the value that balanced aqueous losses, i.e., maintained an approximately constant aqueous volume in the reservoir.

The feed liquor (pH 1) contained 5 g of U, 1 g of V(IV), 0.15 g of Mo, 2.0 g of Fe(II), 0.2 g of Fe(III), 3 g of Al, 1 g of PO_4, and 30 g of SO_4 per liter. The ammonium carbonate concentration was maintained at ~1.6 M, which limited the uranium concentration in the recycle solution to 3-6 g/liter (Table 5.2). The extract, which contained 5 g of U, 0.15 g of Mo, 0.02 g of V, and 0.06 g of Fe per liter was essentially completely stripped of all metals in two stages.

Table 5.2 Data for Continuous Run 4

Aqueous in stripping system and reservoir at startup was that remaining from run 3

Sample	Run Time, hr	Analysis, g/liter				Molarity	
		U	Mo	V	Fe	NH_4^+	$CO_3^=$
Pregnant organic	4	5.0	0.146	0.05	0.06	-	-
	10	4.8	0.145	0.02	0.06	-	-
	14	5.1	0.154	0.02	0.07	-	-
	18	4.8	0.156	0.02	0.06	-	-
Recycle solution[a]	2	6.4	4.4	-	-	3.08	1.60
	4	6.0	4.5	-	-	3.68	1.64
	6	4.5	4.5	-	-	3.63	1.63
	8	2.9	4.8	-	-	3.73	1.56
	10	3.3	4.7	-	-	3.59	1.61
	12	4.6	4.8	-	-	3.25	1.48
	14	5.6	4.8	-	-	3.39	1.53
	16	3.6	5.0	-	-	3.34	1.58
	18	4.1	5.0	-	-	3.40	1.62
Aqueous from stage 2	4	3.8	1.01	-	-	1.39	0.65
	10	5.7	1.62	-	-	1.64	0.79
	14	6.0	1.84	-	-	1.76	0.87
	18	5.6	1.84	-	-	1.74	0.88
Organic from stage 2	4	0.003	<0.005	<0.01	<0.003	-	-
	10	0.006	<0.005	<0.01	<0.003	-	-
	14	0.006	<0.005	<0.01	<0.003	-	-
	18	0.004	<0.005	<0.01	<0.003	-	-

[a]The pH of the recycle solution ranged from 9.3 to 9.6.

Aqueous entrainment in the stripped organic was much lower than in previous runs, in which concentrated ammonium carbonate was fed to the second stage. The cost of ammonia and carbon dioxide lost by this mechanism in run 4 was estimated at <0.5¢ per pound of U_3O_8. In addition, with

the more dilute ammonium carbonate, there was no precipitation of AUT in the second stage as had occurred in runs 2 and 3.

The calcined (2 hr at 500°C) product analyzed 96.3% U_3O_8, 0.014% Mo, 0.97% Fe, <0.2% V_2O_5, 0.1% Al, <0.01% NH_3, 0.23% CO_3, <0.1% SO_4, 0.037% PO_4, and 0.0024% HNO_3—insoluble uranium.

Run 5 (9.5 hr duration). The molybdenum concentration in the recycle solution continuously increased in the preceding runs, reaching ~5 g/liter at the end of run 4. To test separations from uranium at still higher molybdenum concentrations, the recycle solution was spiked with ammonium molybdate, increasing the molybdenum concentration to 12 g/liter. The ammonium carbonate concentration in the recycle solution was maintained at 1.6-1.7 M (Table 5.3). Under these conditions the molybdenum content of the product was only 0.024%, which is in the approximate range of that obtained in runs 3 and 4 with 3-5 g of molybdenum per liter in the recycle solution.

Table 5.3 Data for Continuous Run 5

Aqueous in stripping system and reservoir at startup was that remaining from run 4

Sample	Run Time, hr	Analysis, g/liter				Molarity	
		U	Mo	V	Fe	NH_4^+	$CO_3^=$
Pregnant organic	4	5.0	0.15	0.08	0.07	-	-
	9.5	4.7	0.16	0.09	0.07	-	-
Recycle solution	2	4.0	12.0	0.35	-	3.23	1.55
	4	3.7	11.9	0.66	-	3.27	1.60
	6	4.3	11.6	0.81	-	3.54	1.61
	8	4.7	11.5	0.86	-	3.55	1.65
	9.5	2.6	11.5	0.94	-	3.65	1.69
Aqueous from stage 2	4	4.1	2.52	-	-	1.41	0.66
	9.5	4.1	3.3	-	-	1.55	0.83
Organic from stage 2	4	0.003	<0.005	<0.01	<0.003	-	-
	9.5	0.003	0.005	<0.01	<0.003	-	-

In addition to operating with a higher concentration of molybdenum in the recycle solution, the concentration of vanadium in the feed liquor for this run was increased to 5 g/liter (otherwise the liquor composition was the same as in run 4). The extract contained 0.08-0.09 g of vanadium

per liter (Table 5.3), equivalent to ~2.7% V_2O_5 based on U_3O_8. Uranium was fairly effectively separated from extracted vanadium in the stripping process since the calcined uranium product contained only 0.4% V_2O_5. However, the vanadium concentration in the recycle solution was still increasing at the end of the run and poorer separations would be expected at equilibrium. The continuous increase of vanadium concentration in the recycle solution was somewhat surprising. Although not measured throughout runs 3 and 4, the concentration was <0.1 g/liter at the end of run 4, indicating negligible buildup of vanadium. Whether the higher vanadium solubility obtained in run 5 can be attributed to the presence of a higher concentration of molybdenum, or to some other factor, has not been established. It should be noted that the obtaining of uranium products of low vanadium content in the Dapex process is not dependent on obtaining favorable separation in the stripping step since, if desired, vanadium can be readily scrubbed from the extract with dilute sulfuric acid prior to stripping.

The calcined product from run 5 contained (in addition to 0.024% Mo and 0.4% V_2O_5 previously mentioned) 96.2% U_3O_8, 1.0% Fe, 0.04% NH_3, 0.87% CO_3, 0.04% PO_4, and 0.0024% HNO_3-insoluble uranium.

Accumulation of Solids on Equipment. The AUT tended to accumulate slowly as a tenacious scale on glass equipment in the first stripping stage but did not adhere to Tygon tubing or to Plexiglas. Replacement of the original glass mixer-settler with one made of Plexiglas alleviated this problem. This suggests that scale formation might be avoided in a production facility by judicious choice of construction materials for the first stripping stage. However, occasional shutdown and cleaning (the scale dissolves in hot water and more readily in dilute acid) of the equipment might still be required.

5.1 Recovery of Uranium from Bleed Solution

The uranium in the bleed solution, which in runs 4 and 5 constituted ~1% of the total uranium processed, must be recovered and separated from molybdenum. Good recoveries and favorable separation from molybdenum were obtained by boiling the bleed solution to precipitate uranium or by acidifying the solution and passing it through a carbon column to adsorb molybdenum.

Boiling the Bleed Solution. Boiling a bleed solution to distill ammonia and carbon dioxide, until the pH dropped to ~8, caused precipitation of >99% of the uranium, whereas most of the molybdenum stayed in solution:

Solution	Boiling Time, min	pH	Supernatant Analysis, g/liter U	Supernatant Analysis, g/liter Mo	Precipitated,[a] % of total U	Precipitated,[a] % of total Mo
1	Initial	9.2	5.3	4.3	-	-
	20	8.9	3.7	3.8	30	12
	25	8.8	0.24	3.6	95	17
	55	7.7	0.014	3.1	99.7	28
2	Initial	9.3	2.8	5.0	-	-
	25	8.4	0.017	4.3	99.9	14

[a]Based on head solution and supernatant analyses.

In another test, with a bleed solution containing 2.1 g of U, 11.8 g of Mo, and 1 g of V per liter, boiling until the pH decreased to 8.4 precipitated 99.8% of the uranium, ~50% of the vanadium, and only 2% of the molybdenum. The better separation from molybdenum in this test might have been due to the presence of vanadium but this has not been established experimentally. The uranium precipitate obtained by boiling the bleed solution can be dissolved in the pregnant leach liquor and reprocessed through the extraction circuit.

Adsorption of Molybdenum on Activated Carbon. This method has been tested only with bleed solution from a continuous test on ammonium carbonate stripping of a tertiary amine extractant. Similar results, however, would be expected in treating bleed solution from the Dapex system. An Amex bleed solution, containing ~1 g of U and 8 g of Mo per liter, was acidified to pH 1.5 with sulfuric acid and passed through an 11-in. bed of 20x50 mesh Type OL activated carbon (Pittsburgh Coke and Chemical Company). More than 96% of the uranium and only 20% of the molybdenum passed through the column. This solution could be recycled to the extraction system. The column (loaded to ~270 g of molybdenum per liter) was regenerated with 2 M NH_4OH. If desired, relatively high-purity molybdic oxide could be recovered from the eluate by evaporation and calcination of the residue.

6.0 REAGENT COSTS

Based on data from continuous runs 4 and 5, reagent costs (excluding the cost of reducing ferric iron in the feed liquor) for extraction, stripping, and precipitation are estimated at ~10¢ per pound of U_3O_8 (Table 6.1). This estimate assumes use of commercial carbon dioxide (5¢ per pound). The use of flue gases as a source of carbon dioxide offers a potential cost saving of ~2¢ per pound of

U_3O_8. Recovery of stripping reagent from the calciner off-gases offers further potential for decreasing reagent costs.

Table 6.1 Estimated Reagent Costs for Ammonium Carbonate Stripping

Assumes treatment of a liquor containing 1.2 g of U_3O_8 per liter

Chemical	Consumption	Consumption, lb/lb U_3O_8	Unit Cost, ¢/lb	Cost, ¢/lb U_3O_8
NH_3	Stripping	0.60	5.9	3.5
CO_2	Stripping	0.55	5	2.8
D2EHPA	Distribution to raffinate[a]	<0.004	100	<0.4
DAAP	Distribution to raffinate[a]	<0.004	100	<0.4
Organic phase	Entrainment and spillage[b]	0.05 gal	53¢/gal	2.6
			Total	9.7

[a]Distribution losses to raffinate of D2EHPA and DAAP are <5 ppm. Losses to bleed solution are ignored since volume is so small.

[b]Entrainment and spillage estimated at 0.05% of raffinate volume.

7.0 REFERENCES

1. C. A. Blake, K. B. Brown, and C. F. Coleman, "The Extraction and Recovery of Uranium (and Vanadium) from Acid Liquors with Di(2-ethylhexyl)phosphoric Acid and Some Other Organophosphorus Acids," ORNL-1903 (May 13, 1955).

2. C. A. Blake, D. J. Crouse, C. F. Coleman, K. B. Brown, and A. D. Kelmers, "Progress Report: Further Studies of the Dialkylphosphoric Acid Extraction (Dapex) Process for Uranium," ORNL-2172 (Dec. 18, 1956).

3. K. B. Brown, C. F. Coleman, D. J. Crouse, C. A. Blake, and A. D. Ryon, "Solvent Extraction Processing of Uranium and Thorium Ores," P/509, Proc. Internatl. Conf. on Peaceful Uses of Atomic Energy, Geneva, 1958, Vol. 3, p. 472, U. N., New York.

4. C. A. Blake, Jr., C. F. Baes, Jr., and K. B. Brown, "Solvent Extraction with Alkylphosphoric Acids and Related Compounds," Ind. Eng. Chem., 50: 1763-7 (1958).

5. K. B. Brown, C. F. Coleman, D. J. Crouse, and A. D. Ryon, "Progress Report on Raw Materials for July, 1957," ORNL-2388.

6. B. Elliot and J. Nelson, eds., "Process Development Quarterly Report, Part 1: Laboratory Work," MCW-1410 (Jan. 2, 1958).

8.0 APPENDIX

8.1 Description of Equipment

The mixer-settlers used in the continuous runs were similar to those described in ORNL-2172, Appendix A. Solution flows were controlled with flowrators or with microbellows pumps, and slurry streams were transferred with a finger pump. Information on the size of the equipment is given in Table 8.1.

Table 8.1 Size of Equipment Used in Continuous Tests

Uranium stripping	
Mixer volume, stage 1	980 ml
stage 2	720 ml
Settler volume, stage 1	3040 ml
stage 2	1090 ml
Settler area, stage 1	20 in.^{2}
stage 2	12 in.^{2}
Recycle solution reservoir	
Working volume	2000-5000 ml
Area	20 in.^{2}

ORNL-2952
UC-10 Chemistry-Separation Processes
for Plutonium and Uranium
TID-4500 (15th ed.)

INTERNAL DISTRIBUTION

1. C. E. Center
2. Biology Library
3. Health Physics Library
4-5. Central Research Library
6. Reactor Experimental Engineering Library
7-26. Laboratory Records Department
27. Laboratory Records, ORNL R.C.
28. A. M. Weinberg
29. L. B. Emlet (K-25)
30. J. P. Murray (Y-12)
31. J. A. Swartout
32. E. H. Taylor
33. E. D. Shipley
34. M. L. Nelson
35-36. F. L. Culler
37. W. H. Jordan
38. J. B. Adams
39. J. H. Frye, Jr.
40. S. C. Lind
41. G. I. Cathers
42. A. Hollaender
43. F. F. Blankenship
44. M. T. Kelley
45. C. F. Coleman
46. R. S. Livingston
47. C. P. Keim
48. D. J. Crouse
49. C. E. Winters
50. A. D. Ryon
51. D. Phillips
52. W. K. Eister
53. F. R. Bruce
54. D. E. Ferguson
55. R. B. Lindauer
56. H. E. Goeller
57. R. A. Charpie
58. M. E. Whatley
59. M. J. Skinner
60. R. E. Blanco
61. G. E. Boyd
62. W. E. Unger
63. R. S. Cockreham
64. A. T. Gresky
65. E. D. Arnold
66. C. E. Guthrie
67. J. W. Ullmann
68. K. B. Brown
69. K. O. Johnsson
70. B. Weaver
71. J. C. Bresee
72. C. A. Blake
73. J. G. Moore
74. K. A. Allen
75. R. P. Wischow
76. W. D. Arnold
77. F. J. Hurst
78. R. S. Lowrie
79. F. G. Seeley
80. J. S. Drury
81. J. C. White
82. J. T. Long
83. R. E. Leuze
84. R. A. McNees
85. J. T. Roberts
86. J. R. Flanary
87. W. Davis
88. R. H. Rainey
89. E. M. Shank
90. J. O. Blomeke
91. C. D. Watson
92. W. H. Lewis
93. E. Lamb
94. W. R. Grimes
95. P. M. Reyling
96. D. L. Katz (consultant)
97. C. E. Larson (consultant)
98. J. H. Rushton (consultant)
99. I. Perlman (consultant)
100. H. Worthington (consultant)
101. ORNL - Y-12 Technical Library, Document Reference Section

EXTERNAL DISTRIBUTION

102. Division of Research and Development, AEC, ORO
103. H. L. Hazen, Farmer's Union Bldg., Denver, Colo.
104. M. E. Wadsworth, University of Utah
105-113. E. C. Van Blarcom, Division of Raw Materials, Washington
114-627. Given distribution as shown in TID-4500 (15th ed.) under Chemistry-Separation Processes for Plutonium and Uranium (75 copies - OTS)