MARTIN MARIETTA ENERGY SYSTEMS LIBRARIES

3 4456 0361458 7

ORNL-2830
Chemistry-Separation Processes
for Plutonium and Uranium

RECOVERY OF URANIUM AND PLUTONIUM FROM SULFURIC ACID DECLADDING SOLUTIONS

D. E. Horner
C. F. Coleman

LI
DO N

OAK RIDGE NATIONAL LABORATORY
operated by
UNION CARBIDE CORPORATION
for the
U.S. ATOMIC ENERGY COMMISSION

Printed in USA. Price $1.50. Available from the

Office of Technical Services
Department of Commerce
Washington 25, D.C.

LEGAL NOTICE

This report was prepared as an account of Government sponsored work. Neither the United States, nor the Commission, nor any person acting on behalf of the Commission:

A. Makes any warranty or representation, expressed or implied, with respect to the accuracy, completeness, or usefulness of the information contained in this report, or that the use of any information, apparatus, method, or process disclosed in this report may not infringe privately owned rights; or

B. Assumes any liabilities with respect to the use of, or for damages resulting from the use of any information, apparatus, method, or process disclosed in this report.

As used in the above, "person acting on behalf of the Commission" includes any employee or contractor of the Commission, or employee of such contractor, to the extent that such employee or contractor of the Commission, or employee of such contractor prepares, disseminates, or provides access to, any information pursuant to his employment or contract with the Commission, or his employment with such contractor.

ORNL-2830

Contract No. W-7405-eng-26

CHEMICAL TECHNOLOGY DIVISION
Chemical Development Section C

RECOVERY OF URANIUM AND PLUTONIUM FROM SULFURIC ACID DECLADDING SOLUTIONS

D. E. Horner and C. F. Coleman

DATE ISSUED

NOV 11 1959

OAK RIDGE NATIONAL LABORATORY
Oak Ridge, Tennessee
Operated by
UNION CARBIDE CORPORATION
for the
U. S. ATOMIC ENERGY COMMISSION

MARTIN MARIETTA ENERGY SYSTEMS LIBRARIES

3 4456 0361458 7

ABSTRACT

Uranium and plutonium were recovered by liquid-liquid extraction from simulated sulfuric acid stainless steel decladding solution with several extractants. Consecutive extraction of U(IV) and Pu(III) or (IV) by 0.1-0.3 M primary amine in hydrocarbon-alcohol diluent appeared promising, and chemical flowsheets were demonstrated in laboratory-scale continuous countercurrent extraction. Extraction of U(VI) with a dialkylphosphoric acid appeared promising when plutonium recovery is not needed. Recovery is also chemically feasible by extraction of U(VI) and Pu(IV) with an N-benzyl secondary alkyl amine or a trialkylphosphine oxide. The amine extracts are stripped with nitric acid, giving a sulfate-nitrate product solution. The organophosphorus extractants permit elimination of the sulfate but require sodium carbonate for stripping.

CONTENTS

		Page
1.0	Summary	4
2.0	Introduction	5
3.0	Decladding Solution	7
4.0	Recovery by Amine Extraction	8
4.1	Uranium-Plutonium Extraction with Primary Amine	10
4.2	Continuous Countercurrent Extraction with Primene JM	18
4.3	Countercurrent Stripping from Primene JM	22
4.4	Single Stage Recovery with Primary Amine	26
4.5	Extraction with Mixed Primary and N-Benzyl Secondary Amines	28
5.0	Recovery by Dialkylphosphoric Acid Extraction	30
5.1	Uranium Extraction from Uranium-Thorium Solution	32
6.0	Recovery by Phosphine Oxide Extraction	38
7.0	Reagent Loss and Carryover	41
7.1	Reagent Loss	41
7.2	Reagent Carryover	42
7.3	Sulfate Carryover	42
7.4	Sodium Ion and Product Solution Volume	44
8.0	References	45

1.0 SUMMARY

Uranium(IV) and Pu(III) or (IV) can be recovered from stainless steel decladding solutions, at the expected composition of 2-3 M H_2SO_4 and ~1 M stainless steel metal sulfates, by successive extractions with dilute solutions of a primary amine in hydrocarbon-alcohol diluent. Any significant amount of U(VI) should be reduced, e.g., with chromous sulfate. After the uranium extraction, addition of a small amount of oxidant, e.g., Fe(III) at a concentration much lower than the Fe(II) concentration present, is sufficient to obtain high plutonium extraction. With 0.1-0.3 M amine, 2 uranium stages and 2-4 plutonium stages are sufficient for high recovery at close to the maximum uranium loading and concentration factor. At somewhat lower loading, e.g., 70% of maximum, >99% uranium recovery and >90% plutonium recovery appear feasible with a single extraction stage for each. Thus, the extraction process could be carried out by successive passes through a single batch or flow contactor.

Alternatively, the U(IV) and Pu(III-IV) can be extracted with a single extractant stream, at ~70% of maximum uranium loading, in a countercurrent system providing 2 stages for uranium and 2-4 stages for plutonium.

The uranium and plutonium extract streams can be combined for stripping with nitric acid. The product solution will carry sulfate equivalent to the amine used plus the metals recovered. When the extractant is loaded close to the stoichiometric maximum, 1 mole of uranium to 8 moles of amine, the product will contain approximately 6 moles of sulfate per mole of uranium. From synthetic decladding solution containing uranium at 2.3 g/liter and plutonium at 0.5 mg/liter, extraction with 0.3 M amine at a/o = 2.4/1 and stripping with 5 M HNO_3 at a/o = 1/10 yielded a product solution containing 74 g of uranium and 17 mg of plutonium per liter, 0.25 M HNO_3, and 2.4 M sulfate. The overall uranium and plutonium recovery was >99% with a concentration factor >30 from feed to product. The extraction was continuous-countercurrent in two uranium and four plutonium stages. The stripping was batch-countercurrent in four stages.

U(VI) and Pu(IV) can be extracted from 2-3 M H_2SO_4 solutions by a dilute solution of an N-benzyl secondary alkyl amine or of a trialkylphosphine oxide. While the extraction coefficients are much lower than those for U(IV) and Pu(IV) with primary amines, they are high enough for extraction in probably 4 to 8 stages. Chemical flowsheets to use these extractions are proposed, but have not been tested in countercurrent extraction.

When plutonium is absent or negligible, U(VI) can be recovered from the sulfuric acid decladding solution, with iron reduced to Fe(II), by extraction with a dilute solution of a dialkylphosphoric acid in synergistic combination with TBP, a phosphonate, or a phosphine oxide. From synthetic decladding solution containing 0.07 g of uranium and 1.5 g of thorium per liter, extraction with 0.3 M di(2-ethylhexyl)-phosphoric acid—0.15 M TBP at a/o = 10/1 and stripping with 2 M Na_2CO_3 at a/o = 1/11 yielded after acidification a product solution containing 4.5 g of uranium, 1.5 g of thorium, 0.2 g of iron, and 0.03 g of sulfate per liter with 1.8 M $NaNO_3$ and 0.5 M HNO_3. The extraction was continuous countercurrent in 8 stages (97% recovery). The acidified product solution was from the first of 2 stripping stages, not countercurrent (>85 and >99 cumulative percent stripped).

Recovery of both U(VI) and Pu(IV) by extraction with dialkylphosphoric acid may be feasible but appeared less promising than the foregoing methods because of excessive extraction of Fe(III).

Thorium, when present, can be recovered together with U(IV) by extraction with a primary amine or left in the waste by extraction of U(VI) with a dialkylphosphoric acid.

Recovery by extraction with a dialkylphosphoric acid or a trialkylphosphine oxide has the potential advantage, in comparison with extraction by the amines, that sulfate carry-over into the strip solution is much lower and could be eliminated by a simple scrub. These reagents have the disadvantage of requiring carbonate solution for stripping, which introduces sodium ion into the product solution and necessitates handling of solids in the strip solution whenever iron is extracted or entrained.

Of the foregoing reagents, one suitable primary amine and one dialkylphosphoric acid are commercially available. Other suitable primary amines and N-benzyl secondary alkyl amines are available in limited pilot plant quantities, and one trialkylphosphine oxide is available as a specialty reagent.

2.0 INTRODUCTION

This report presents laboratory studies on the recovery of uranium and plutonium from sulfuric acid stainless steel decladding solutions by solvent extraction. While decladding by the Sulfex process has been demonstrated with dissolution of less than 0.1% of the uranium from the core,[1,2] availability of an effective scavenging method is considered desirable as a safeguard against the possible dissolution and loss

of significantly larger amounts.

The scavenging method should be simple, and should meet as far as possible the following criteria:

1. It should be able to handle up to 1% of the total uranium and to leave less than 0.01% of the total uranium and plutonium in the waste.

2. The decladding solution should not be diluted more than necessary to prevent precipitation and nothing should be added that would interfere with disposal.

3. Uranium and plutonium should be recovered together in a form suitable for return to the main cycle; separation from sulfate, extractant, and stainless steel metals should be sufficient to prevent interference with operation of the main cycle; fission products are less important.

From extraction data obtained in the development of uranium recovery processes for sulfate ore leach liquors,[3] U(IV) can be extracted from 3-5 M sulfuric acid solutions by primary amines, and U(VI) by N-benzyl secondary alkyl amines, trialkylphosphine oxides, and dialkylphosphoric acids. The last, dialkylphosphoric acid, gives relatively low extractions from such solutions when used alone but considerably higher extractions when used in synergistic combination with trialkylphosphates, phosphonates, or phosphine oxides.

Thorium. While this report is concerned only with uranium and plutonium recovery, the same extractants should be applicable to decladding solutions containing thorium. If thorium recovery is desired, it can be extracted with a primary amine in the same way as U(IV), and with similarly high extraction coefficients. However, the limited solubility of thorium sulfate in the final strip solution, of the order of 10 g of thorium per liter,[4] will not permit taking advantage of as high a concentration factor across the system as is available for uranium. If thorium recovery is not required, U(VI) can be recovered by extraction with one of the other types of reagents listed above.

Reagent Availability. Some of the reagents considered here are commercially available, while others are available at present only as research chemicals. The primary amine Primene JM (Rohm and Haas Co.) is available in quantity at ~50¢ per pound. Some other primary amines like 1-undecyllaurylamine (Armour and Co.) are available in limited pilot plant quantities.[5] While N-benzyl-1-(3-ethylpentyl)-4-ethyloctylamine (NBHA) has been obtained only as a research chemical, similar

reagents, e.g. N-benzyl-1-undecyllaurylamine (Armour and Co.), are available in limited pilot plant quantities.[5] Tri-n-octylphosphine oxide (TOPO) is the only trialkylphosphine oxide now available, and that only as a specialty reagent (Eastman Organic Chemical No. 7440). Di(2-ethylhexyl)phosphoric acid (D2EHPA) is available in quantity at ~$1.00 per pound. Suitable alcohols to improve the compatibility of aliphatic diluents with amines, e.g., oxo-process mixed tridecanols, are available at ~25¢ per pound. Modifiers used to permit alkaline stripping of D2EHPA include, besides TBP and TOPO, certain phosphonate esters potentially available at <$1.00 per pound.

The authors wish to thank J. P. Eubanks for assistance in setting up and running the continuous countercurrent extraction tests. Most of the analyses involved in this study were performed by members of the Analytical Chemistry Division under the direction of M. T. Kelley and C. D. Susano. In particular, most of the plutonium analyses were performed by J. M. Peele of that division. Laboratory facilities needed for some of the plutonium tests were made available by J. R. Flanary and J. H. Goode.

3.0 DECLADDING SOLUTION

The decladding solution is expected to arise from the complete dissolution of 304L stainless steel in 100-200% excess of 4 or 6 M sulfuric acid. This solution must be diluted to prevent precipitation on cooling, yielding a solution probably 2-3 M in sulfuric acid and ~1 M in stainless steel metals. The slightly enriched UO_2 and the ThO_2—enriched UO_2 cores are subsequently dissolved in nitric acid for Purex- or Thorex-type processing.

Sulfuric acid at 3-5 M containing convenient concentrations of uranium or plutonium was used as a sufficient approximation to such solutions for the survey testing of various extractants. For the more detailed testing, the solutions used were either 3 M H_2SO_4—0.5 M Na_2SO_4, or simulated stainless steel solutions made up from reagent chemicals to a composition approximating 2.5 M H_2SO_4, 1 M $FeSO_4$, 0.2 M $Cr_2(SO_4)_3$, 0.1 M $NiSO_4$, 0.012 M $U(SO_4)_2$ (3 g of uranium per liter). Plutonium, when tested, was added at levels of 0.5 to 10 mg/liter (4×10^{-5} M), after reduction with iron metal in the sulfuric acid stock solution. The plutonium used had been previously freed from americium by D2EHPA extraction.

For tests of extraction from reduced solution, the simulated stainless steel solution was reduced with chromous sulfate, zinc, iron metal, or amalgamated aluminum just

before use. Its potential was kept <-130 mv,* which was established by potentimetric titration as sufficient for complete reduction to U(IV). For tests of extraction from oxidized solution, the simulated stainless steel solution was first reduced and was then oxidized with dichromate.

4.0 RECOVERY BY AMINE EXTRACTION

Amines in hydrocarbon solution extract uranium and thorium from acidic sulfate solutions as sulfate complexes, by anion exchange, approaching U(VI)/amine mole ratios of 1/(4 to 6)[6] and U(IV)/amine or Th/amine ratios of 1/8[7,8] at maximum loading. Excess sulfate competes with the extraction, and high aqueous acidity further impairs extraction by increasing the proportion of bisulfate ion. Primary, secondary, and tertiary amines have generally about the same order of extraction power for U(VI) sulfate, except that extractions are markedly higher with certain N-benzyl secondary-alkyl amines. Only these have given usable U(VI) extraction coefficients from 3 M H_2SO_4. In contrast, U(IV) and thorium sulfate extractions are much higher with primary amines than with secondary or tertiary.

Plutonium(IV) extractions from sulfuric acid and from sulfate solutions (Table 4.1) were also much higher with primary amines than with secondary or tertiary. However, the extraction coefficients with the N-benzyl secondary amines are high enough to be useful. Corresponding tests of the extraction of Pu(III) from 3 M H_2SO_4 with Primene JM and other primary amines gave highly variable results, the extraction coefficients typically ranging from ~5 to >>100 with 0.1 M amines. Results were similar from solutions containing ferrous sulfate. The explanation offered for the variable extractions is that strong complexing of Pu(IV) by sulfate and amine enhances the oxidizability of the Pu(III) enough to give nearly complete oxidation and extraction as Pu(IV), whether or not any Pu(III) is extracted as such. While this explanation has not been proved, an extraction procedure based on it has worked satisfactorily (Sect. 4.2).

Extraction of ferric iron was fairly low from 3 M H_2SO_4, E_a^o = 0.02 with 0.1 M Primene JM and 0.04 with 0.1 M NBHA. Extraction of ferrous iron was considerably lower, $E_a^o \approx 10^{-3}$ with 0.1 M Primene JM.

---

*Platinum vs saturated calomel electrode system. The sign is that of the platinum electrode, so that higher positive potential indicates higher oxidation.

Extracted uranium can be stripped from amines by several reagents, including dilute nitric acid and sodium carbonate solution.[9] Extracted plutonium was also stripped effectively from amines with dilute nitric acid. Stripping of plutonium from amines with carbonate was not tested but would be expected to proceed readily on the basis of the general effectiveness of carbonate stripping of amines[9] and the satisfactory stripping of plutonium from D2EHPA with carbonate (Sect. 5).

Two different approaches to uranium-plutonium recovery are suggested by the foregoing amine extractions. One is extraction of both U(IV) and Pu(III-IV) with a primary amine, either in consecutive extractions or possibly within a single extraction system (Sects. 4.1, 4.2). The other is oxidation followed by extraction of Pu(IV) and U(VI) simultaneously with mixed primary and N-benzyl secondary amines (Sect. 4.5).

Table 4.1. Plutonium Extraction by Amines from Sulfate Solutions

Initial Pu concentration: 10-20 mg/liter
Organic diluent: Amsco 125-82
Phase ratio: 1/1
Room temperature

Amine	Conc., M	Extraction Coefficient, E_a^o(Pu-IV) 3 M H_2SO_4	3 M SO_4, pH ~1
Primene JM[a,b]	0.1	>1000	>1000
	0.4	≳8000	
Di(tridecyl)amine[a]	0.1	0.8	6
S-24[c]	0.1	<0.1	0.2
NBHA[d]	0.1	6	>20
	0.4	20	100
N-benzyl-1-undecyl-laurylamine	0.1	5	
Tri-iso-octylamine	0.1	<0.001	<0.01

[a]Amsco 125-82 diluent modified with tridecanol.

[b]Primene JM is a commercial primary amine (Rohm and Haas Co.) with a homologous mixture of highly branched tertiary alkyls, averaging around 20 carbon atoms. For all tests in this report the lighter and more water-soluble fractions were washed out by pre-scrubbing with 25 volumes of 0.2 M H_2SO_4.

[c]Amine S-24 is bis(1-isobutyl-3,5-dimethylhexyl)amine.

[d]NBHA is N-benzyl-1-(3-ethylpentyl)-4-ethyloctylamine.

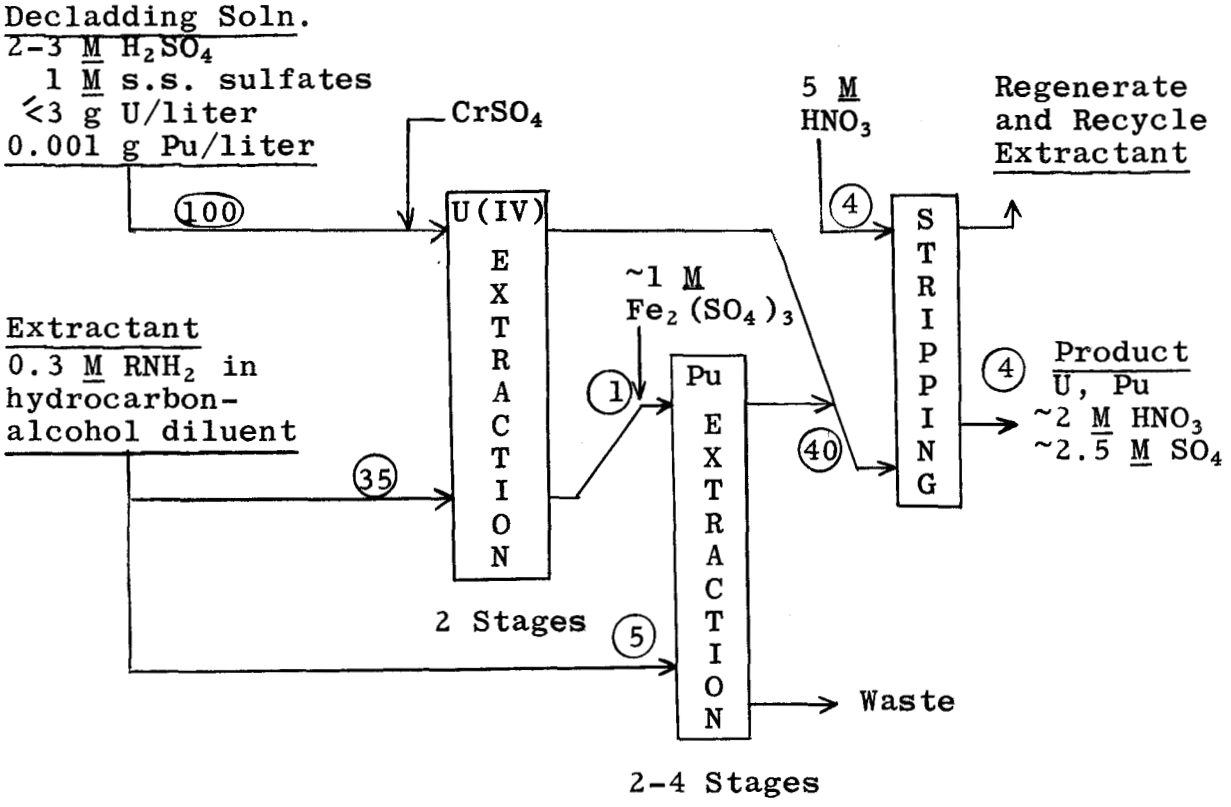

Fig. 4.1. Plutonium and uranium recovery from sulfuric acid decladding solution by extraction with primary amine. Circled numbers represent relative flows.

4.1 Uranium-Plutonium Extraction with Primary Amine

The schematic flowsheet for successive extraction of U(IV) and Pu(III) or Pu(IV) with primary amine is shown in Fig. 4.1. The decladding solution is expected to be nearly completely reduced as received, but it is to be treated with, for example, iron metal or chromous sulfate, if necessary, to ensure that >99% of the uranium is U(IV). The phase ratio in the uranium extraction section is set by the limiting loading ratio of 1/8, with only a little margin of uncomplexed reagent required. To provide capacity for the extraction of 3 g of uranium per liter of feed with 0.3 M amine, this calls for an a/o phase ratio of ~100/35. After the uranium is removed, ferric sulfate is added so that a small amount of oxidant is available during the plutonium extraction. As described above, extraction from Pu(III) solution is believed to occur principally through enhanced oxidation to and extraction of Pu(IV). The ferric sulfate concentration is arbitrarily set at 0.01 M in

the flowsheet, which is much higher than the expected plutonium concentration but low in comparison to the ferrous concentration already present. With plutonium at ~1 mg/liter or even considerably higher, physical operation rather than the stoichiometric plutonium loading limit will set the phase ratio in the plutonium extraction section. This is arbitrarily set at a/o ≈ 20/1 in the flowsheet. The uranium and plutonium extracts are combined for stripping with nitric acid. Scrubbing of the uranium-plutonium product solution with an organic solvent might be required to remove any dissolved and entrained amine and prevent its crossover into the main cycle. It might also be desirable or necessary to regenerate the stripped amine solution with sodium carbonate to remove nitrate, and any extracted materials not stripped by the nitric acid, before recycle.

Uranium(IV) (Fig. 4.2) and Pu(IV)[10] extractions from 3 M H_2SO_4 vary with the cube of the uncomplexed primary amine concentration. Uranium extraction reaches saturation at a U/amine mole ratio of 1/8 (Fig. 4.3). The extraction coefficient, $E_a^o(U)$, is ~10,000 with 0.1 M uncomplexed amine. The calculated uranium extraction isotherms (Figs. 4.3, 4.4) thus rise very sharply, so that a single extraction stage can give high recovery, and two extraction stages should be sufficient for >99% recovery of the U(IV) even at loading close to the limiting ratio. The validity of the calculated extraction isotherm was confirmed by two-stage batch extractions carried through four cycles (Table 4.2). Two tests were run at different phase ratios, corresponding to U/amine mole ratios of 1/10 and 1/7, i.e., slightly below and slightly above the expected loading limit. At the 1/10 ratio uranium recovery was >99%. At the 1/7 ratio it dropped to 93%, with about the expected amount of uranium lost to the raffinates. The individual points from these tests are also shown in Fig. 4.4, in reasonably close agreement with the calculated curve.

For the first countercurrent testing of the plutonium extraction, a combined flow system (Fig. 4.5) rather than the separate flow system was used, since it is closely parallel to the flowsheet of Fig. 4.1 in the uranium and plutonium extraction sections considered separately. It was also expected to provide a test of the ability of the plutonium, once extracted, to be retained in the organic phase during uranium extraction. Four extraction stages of this flowsheet were tested through five cycles of batch countercurrent extraction (Table 4.3). Five preliminary cycles without plutonium in the feed were used to bring the macro components into approximately steady-state distribution. One-tenth molar amine and an a/o phase ratio of 1/1 were used, instead of 0.3 M and 100/35 as in Fig. 4.5, for convenience in the glove box operation. Air was displaced from the separatory funnels with carbon dioxide immediately after each transfer to minimize air

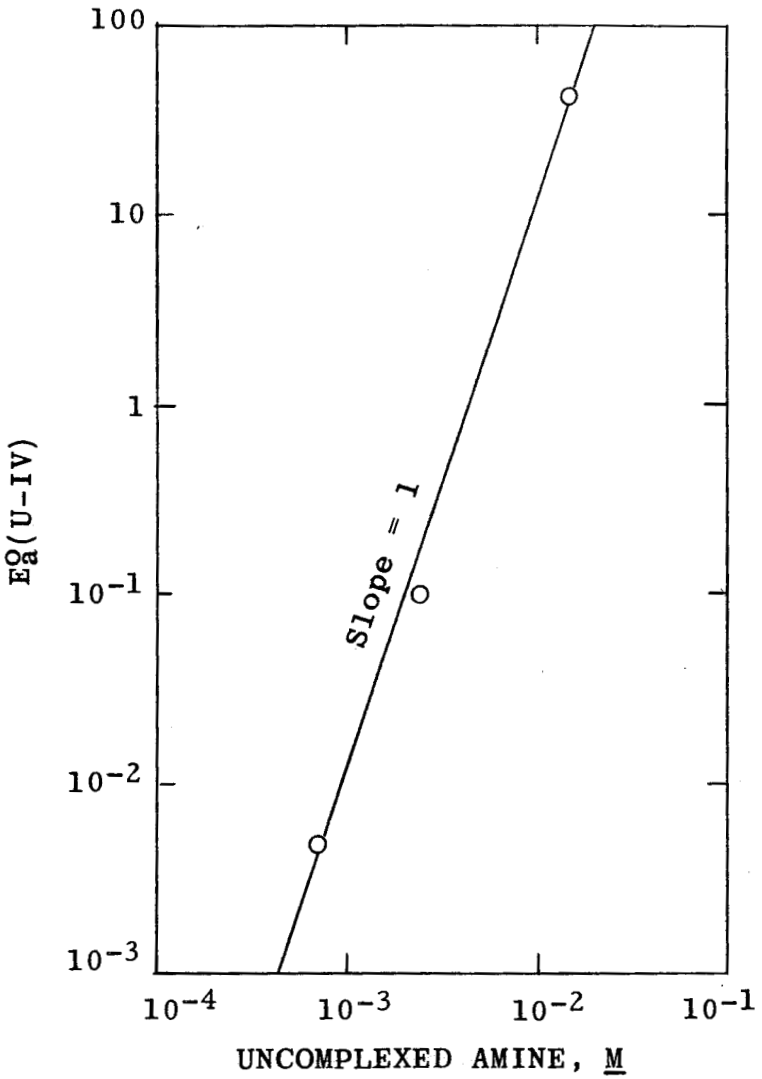

Fig. 4.2. Dependence of U(IV) extraction coefficient on concentration of uncomplexed Primene JM. Uranium extracted from 3 M H_2SO_4—0.5 M Na_2SO_4.

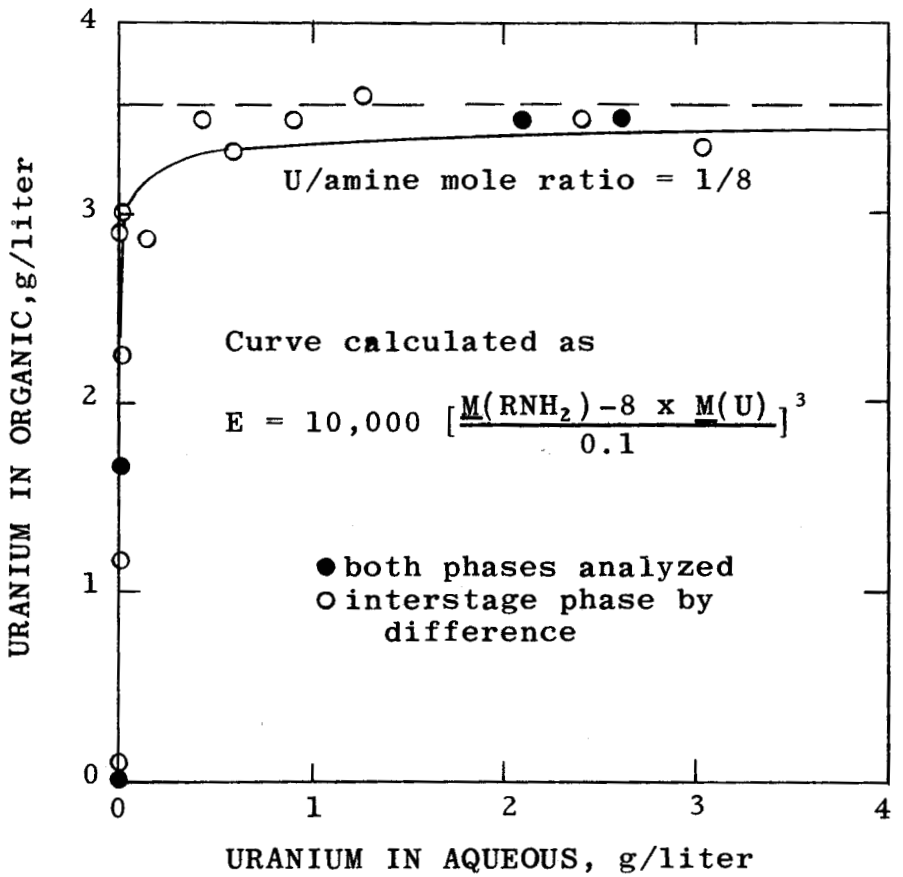

Fig. 4.3. Extraction isotherm for extraction of uranium from 3 M H_2SO_4—0.5 M Na_2SO_4 by 0.12 M Primene JM. Points from 2-stage countercurrent extraction (Table 4.2).

absorption and thus provide a better test of the need and sufficiency of the ferric sulfate oxidant. Phase separation was rapid except when some finely divided iron metal (used for reduction in this test) was allowed to enter the extraction.

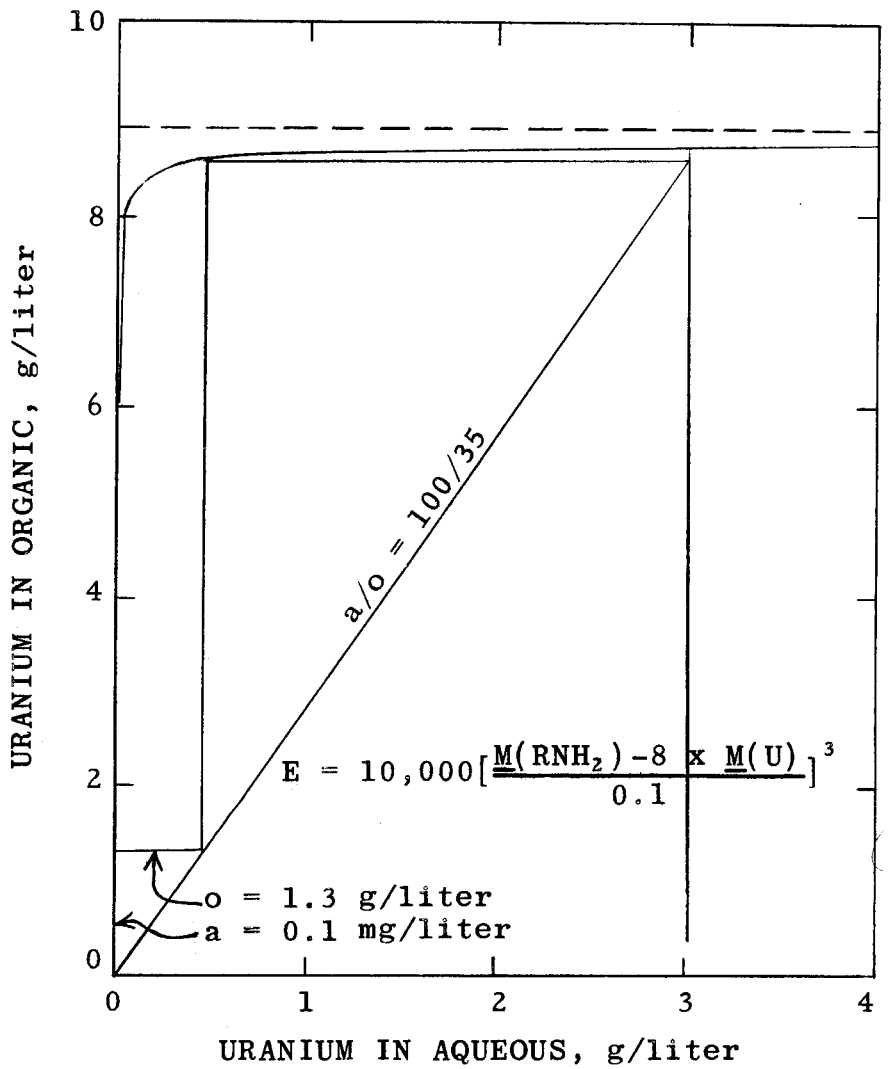

Fig. 4.4. Uranium extraction isotherm for extraction of uranium from 3 M Na_2SO_4—0.5 M Na_2SO_4 by 0.3 M Primene JM.

Table 4.2. Two-stage Countercurrent Uranium Extraction

Feed: 3 M H_2SO_4, 0.5 M Na_2SO_4, 3.1 g U(IV)/liter

Extractant: 0.12 M Primene JM in 90% Amsco 125-82—10% tridecanol

10 min contact in Burrell shaker, room temperature

		Uranium Distribution, g/liter					
		a/o = 1.34[a]			a/o = 0.94[b]		
Cycle	Stage	Aqueous In	Organic Out	Aqueous Out	Aqueous In	Organic Out	Aqueous Out
1	1	3.1	3.5		3.1	2.9	
	2	3.1		0.58	3.1		0.008
2	1	3.1	3.4		3.1	3.5	
	2			0.018			0.005
3	1	3.1	3.6		3.1	3.0	
	2			0.43			0.018
4	1	3.1	3.5	(2.61)[c]	3.1	3.5	(2.09)[c]
	2		(1.7)[c]	0.020		(0.005)[c]	0.006
Material balance, %			99			103	
Uranium loss to raffinate, %			7			0.3	

[a]Phase ratio (a/o) 1.34 to give steady-state U/amine mole ratio of 1/7.

[b]Phase ratio (a/o) 0.94 to give steady-state U/amine mole ratio of 1/10.

[c]Interstage concentrations.

Table 4.3. Countercurrent Test of Combined Extraction of Uranium and Plutonium by Primary Amine

Batch equilibration, double diamond pattern

Feed: 2.4 M H_2SO_4, 1.5 M stainless steel sulfates, 3.1 g U(IV)/liter; 9.4 mg Pu(III)/liter in feed for cycles 6-10 only

Extractant: 0.113 M Primene JM in 90% Amsco 125-82—10% tridecanol

Phase ratio a/o = 1/1, 10 min contact in Burrell shaker, room temperature

		U Distn., g/liter			Pu Distn., mg/liter		
		U	U Out		Pu	Pu Out	
Cycle	Stage	In	Org	Aq	In	Org	Aq
1-4	1	4x3.1	4x(3.0)[a]		0		
4	4			0.0004			
5	1	3.1	3.0	0.007	0		
	2		0.009	0.0003			
	3		0.0009	0.0002			
	4		<0.0004	0.0004			
6-9	1	4x3.1	4x(3.8)[a]		4x9.4	4x(0.09)[a]	
9	4			0.0012[b]			<0.01
10	1	3.1	3.6	0.063	9.4	0.4	21.8
	2		-	0.0027		13.7	2.5
	3		0.0034	0.0020		2.1	0.03
	4		0.0008	0.0015		0.013	<0.01
Material balance, %			~110			87	
Loss in raffinate, %							
from Stage 2			0.09			-	
from Stage 4			0.05			0.07	

[a]Extracts of cycles 1-4 and of cycles 6-9 composited for analysis.

[b]Uranium in raffinates from cycles 6, 7, and 8 was 0.0014, 0.0014, and 0.0016 g of uranium per liter.

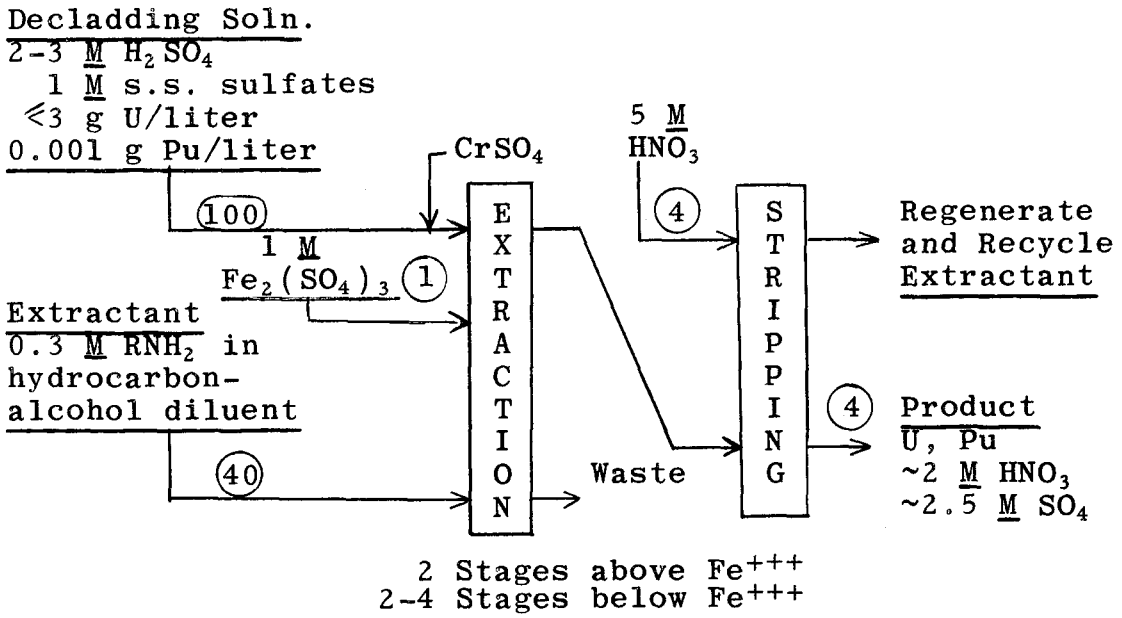

Fig. 4.5. Combined uranium and plutonium extraction by primary amine. Circled numbers represent relative flows.

As expected from the extraction isotherm, uranium extraction was nearly complete in the first stage, and less than 0.1% of it remained in the aqueous stream leaving the second stage. The plutonium, however, had not reached steady state. Its extraction was high in the third stage, $E_a^o = 70$, but it refluxed almost completely in the first stage, with <5% leaving in the extract. Nevertheless, less than 0.1% was lost in the fourth stage raffinate, so that removal of the organic stream leaving stage 3 as a product, according to Fig. 4.1, would have given high plutonium recovery.*

The combined loaded organic solutions from cycles 1-5 and from cycles 6-9 were stripped through five contacts (not countercurrent) with 1.5 M HNO_3 at an a/o phase ratio of 1/10 (Table 4.4). More than 95% of the uranium and plutonium was stripped in the first two contacts, and >99% in four contacts. After being sampled for analysis, the strip solutions from cycles 1-5 were combined and scrubbed with five successive equal volumes of xylene. The amine content of each scrub was

*While plutonium retention in the uranium extract was not effectually tested here, it was successful in a subsequent extraction (Sect. 4.2).

estimated by extraction of Np^{238} tracer (4×10^{-9} M Np^{237} carrier) from 2.5 M H_2SO_4 solution. The $E_a^o(Np)$ values indicated that the first xylene scrub carried ~10^{-4} M amine and that the second and third scrubs were much lower, probably around 10^{-5} M. Not enough neptunium was extracted by the fourth and fifth scrubs to be distinguished from background. These results indicate that not more than 0.002 ml of the organic phase was entrained per milliliter of the strip solution, and that nearly all this was removed by the first equal-volume scrub.

Table 4.4. Uranium and Plutonium Stripping from Primene JM

Organic: combined products from stages 1-5 and from stages 6-9 (Table 4.3)

Strip: 1.5 M HNO_3

Phase ratio, a/o = 1/10

10 min contact time, Burrell shaker, room temperature

	U, g/liter		Pu, mg/liter,
	From cycles 1-5	From cycles 6-9	From cycles 6-9
Loaded organic	3.0	-	-
Strip 1	20.5	26	0.62
2	8.2	10.7	0.24
3	0.36	1.11	0.03
4	0.017	0.25	0.006
5	0.0008	0.0025	<0.002
	29.1	38.1	0.90
Stripped organic	0.0002	0.0002	<0.002

Uranium(VI). While extraction of U(VI) from 2-3 M H_2SO_4 by primary amines is low, it is sufficient to give partial recovery of some unreduced or reoxidized uranium. Extraction coefficients with Primene JM from 3 M H_2SO_4—0.5 M Na_2SO_4 (Table 4.5) plotted against the calculated free reagent concentrations (Fig. 4.6) indicate extraction coefficients of ~0.4 at 0.1 M and ~1 at 0.3 M free reagent. Thus, with 0.3 M amine used according to Fig. 4.1, somewhat less than half of any small amount of U(VI) initially present should be recovered: essentially none in the first stage because it is highly loaded with U(IV), ~25% in the second uranium stage at a/o ≈ 3/1, and 10-20% in 2-4 plutonium stages at a/o ≈ 20/1. In the alter-

native flowsheet (Fig. 4.5) the recovery of a small amount of U(VI) should approach 80% in 2 uranium and 4 plutonium extraction stages at a/o ≈ 3/1.

Table 4.5. U(VI) Extraction from Sulfuric Acid Solution by Primene JM

3 M H_2SO_4—0.5 M Na_2SO_4, 1 to 10 g U/liter
Diluent: 90% Amsco 125-82—10% tridecanol
a/o = 1/1 room temperature

Initial Amine, M	E_a^o	U in Org, M
0.03	0.06	0.0022
0.03	0.10	0.0004
0.1	0.47	0.0013
0.3	1.1	0.0017

4.2 Continuous Countercurrent Extraction with Primene JM

The consecutive extraction of U(IV) and then Pu(III) or (IV) according to the flowsheet of Fig. 4.1 was confirmed by continuous countercurrent extraction in a 6-stage bank of laboratory-scale mixer-settlers. The results (Table 4.6 and Fig. 4.7) show >99.5% recovery of the uranium and plutonium from synthetic decladding solution at 70-90% of theoretical uranium loading. A brief test was included of extraction of both U(IV) and Pu(III) or (IV) with a single extractant stream. The results at ~70% of theoretical uranium loading were essentially as satisfactory as with the separate extractant streams.

The mixer-settlers used have been described by Weaver.[11] Their holdup was about 40 ml of organic and 160 ml of aqueous phase each. They were set up in a glove box for the tests with plutonium. The aqueous stream at 45.5 ml/min and the first extractant stream at 19 ml/min (Figs. 4.1 and 4.7) were metered by bellows pumps located outside the glove box, the former by pumping an inert hydrocarbon stream to move the feed solution by displacement. The slower flows, i.e., the second extractant stream at 2.4 ml/min metered by rotameter and the ferric sulfate oxidant stream at 1 to 2 ml/min metered by drop-counting, were controlled by pinch clamp and gravity head.

The synthetic decladding solution was made up in several batches to approximately 2 M H_2SO_4, 1 M stainless steel

sulfates, and 3 g of uranium and 0.5 mg of plutonium per liter. Each batch was reduced to -200 mv* with chromous sulfate solution [~1 M $Cr_2(SO_4)_3$ reduced with amalgamated zinc], using 50-100 ml per liter.

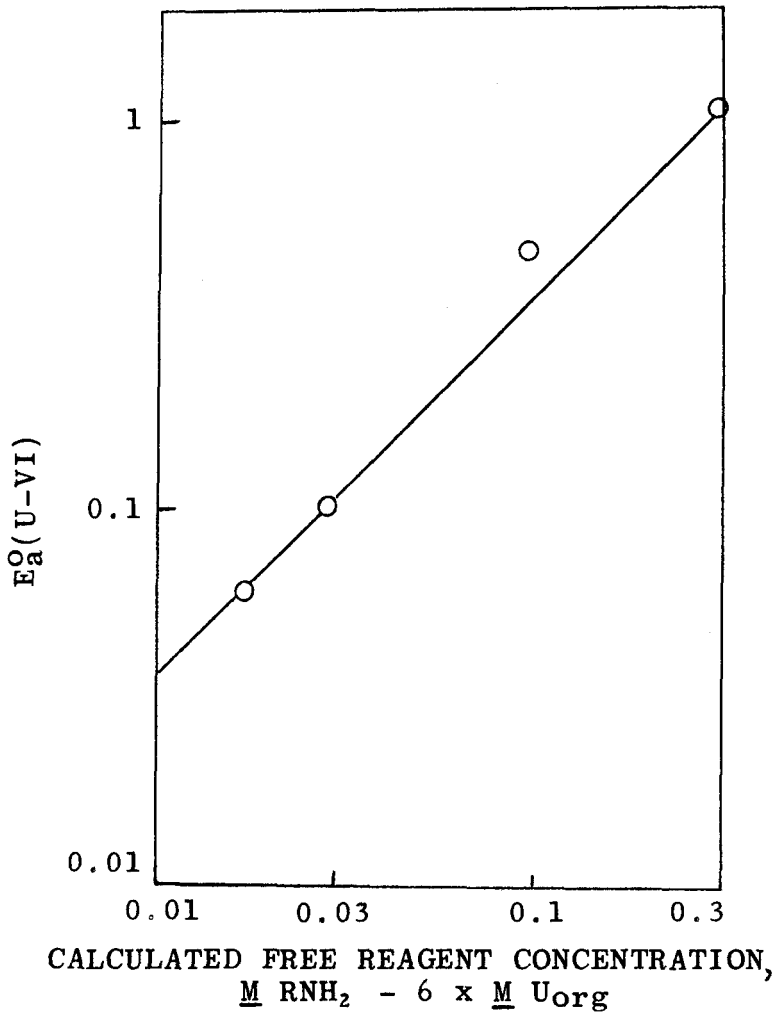

Fig. 4.6. U(VI) extraction by Primene JM in 70% Amsco 125-82—10% tridecanol from 3 M H_2SO_4-0.5 M Na_2SO_4.

*Pt-SCE, higher positive emf indicating higher oxidation.

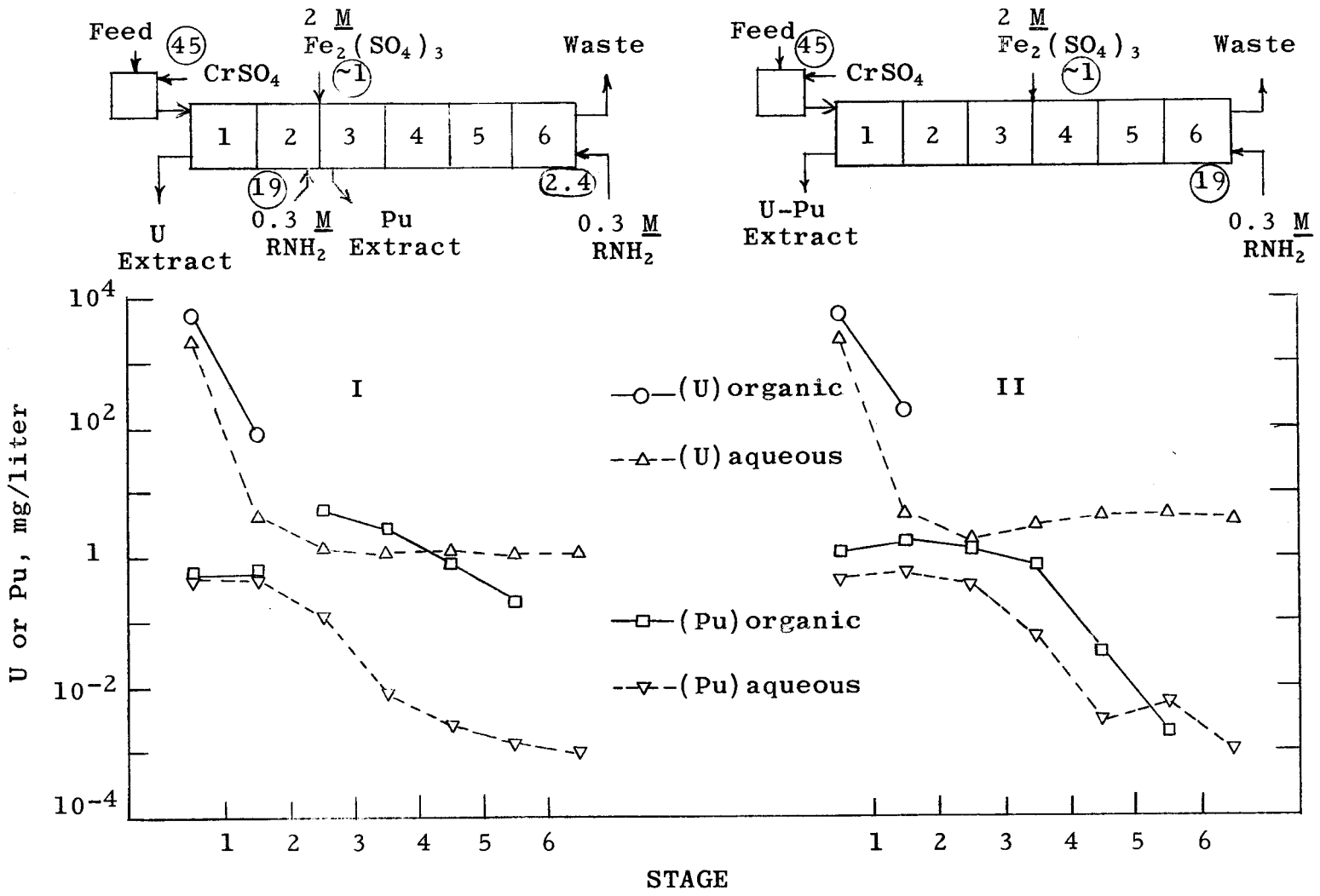

Fig. 4.7. Concentration profiles through extraction system. I, consecutive uranium and plutonium extraction with separate organic streams, after five cycles. II, combined uranium and plutonium extraction, after seven cycles.

Table 4.6. Uranium and Plutonium Recovery from Sulfuric Acid—Stainless Steel Dissolver Solution by Extraction with Primary Amine

Feed (synthetic): 2 M H_2SO_4, 1 M stainless steel sulfates, ~3 g U/liter, ~0.5 mg Pu/liter

Extractant: ~0.3 M Primene JM in 85% Amsco 125-82—15% tridecanol

Continuous countercurrent extraction in 6 mixer-settlers (Fig. 4.6)

	U, g/liter			Pu, mg/liter			
Cycle[a]	Feed	Raff.	U Extr.	Feed	Raff.	U Extr.	Pu Extr.
1.3[b]	3.2	3.0×10^{-3}	5.2				
2.6	2.6	1.6×10^{-3}	7.5				
3.9	2.8	1.4×10^{-3}	7.8				
1.3[c]	2.6	0.3×10^{-3}	6.5	0.48	7×10^{-3}	0.44	4.4
2.6	2.2	0.5×10^{-3}	6.0	0.48	3×10^{-3}	0.48	6.9
3.9	2.4	1.6×10^{-3}	6.0	0.49	2×10^{-3}	0.79	4.9
5.2	2.3	1.2×10^{-3}	5.9	0.48	1×10^{-3}	0.52	5.5
7[d]	2.3	3.8×10^{-3}	6.0	0.48	1×10^{-3}		1.2

[a]One cycle = one estimated displacement of the slowest stream through the extraction system.

[b]Run with uranium only, starting with barren aqueous in the settlers. Feed/U Extr./Pu Extr. = 50/17.5/2.5, 0.35 M amine.

[c]Consecutive uranium and plutonium extraction with separate organic streams, starting with barren aqueous in the settlers. Feed/U Extr./Pu Extr. = 45.5/19/2.4, 0.29 M amine.

[d]Combined uranium-plutonium extraction, starting with the solutions present at the completion of the consecutive extraction test. Feed/Extr. = 45.5/19, 0.29 M amine.

Troublesome emulsions formed in the mixers until a surfactant, Victawet 12, was added to the aqueous feed at a concentration of about 100 ppm. Slight emulsification was still observed at times when a mixer stirrer was running too fast.

Extraction coefficients through the extraction system corresponding to the profiles shown in Fig. 4.7 were:

Stage:	1	2	3	4	5	6
I. Consecutive U and Pu extraction streams:						
E_a^o(U)	1300	60				
E_a^o(Pu)	1	4	700	1000	600	>150
II. Combined U and Pu extraction:						
E_a^o(U)	1200	100				
E_a^o (Pu)	2	5	20	250	60	5

The small quantity of uranium in the aqueous stream after the second stage was probably rapidly oxidized to the poorly extractable U(VI) by the ferric iron added. The plutonium extraction coefficient was low in the first stage because the extractant was loaded to a considerable extent with uranium and probably also because oxidation was prevented by the U(IV). It was appreciably higher in the second stage where there was negligible loading and much higher in the next subsequent stages where a small amount of oxidant was available. [Besides the added ferric sulfate, air oxidation probably had some effect after the U(IV) was gone.]

The flow ratio in uranium extraction, and hence the uranium loading and concentration factor, was appreciably lower in the uranium-plutonium test than indicated in the proposed flowsheet (Fig. 4.1), a/o = 2.4/1 instead of 100/35 ≈ 2.9/1. The mixer-settlers available for these tests had been designed and used for flow ratios close to 1/1, and significantly low stage efficiency was suspected at much different flow ratios. Hence the uranium extraction flow ratio was decreased to avoid the possibility of interference with the testing of plutonium extraction. The resulting uranium concentration of 0.025 M in the extract was 70% of the stoichiometric loading. While the first-stage extraction coefficient of 1200 as compared with 6000-7000 from the extraction isotherm (Fig. 4.4) indicates stage efficiency appreciably below 100%, it also shows a considerable margin of safety for adjustment to higher uranium loading.

4.3 Countercurrent Stripping from Primene JM

Loaded extract from the foregoing continuous countercurrent extraction was stripped with 5 M HNO_3 in a countercurrent batch stripping system. The maximum amounts left in the stripped organic were ~3% of the uranium and ~0.1% of the plutonium. The uranium concentration in the aqueous product solution was nearly constant; however, the plutonium concentration varied considerably, indicating varying internal reflux.

The organic feed to the stripping system was the 0.3 M Primene JM extract from the combined uranium-plutonium extraction test (Table 4.6). Four stripping stages using separatory funnels were carried through 18 cycles, single-diamond pattern. Analyses of the consecutive exit solutions (Table 4.7) and the final profile across the system (Table 4.8) showed that uranium was carried over into the second stage until the aqueous concentration there was higher than in the product solution, but carried over much less to the third and fourth stages. After the first six cycles, during which the uranium reflux was presumably increasing, the uranium concentration was nearly constant in the product solution. The fraction of the uranium remaining in the stripped organic started near 1%, rose to ~3%, and then dropped to <0.2%. Plutonium stripping was more complete than uranium stripping, with less than 0.1% remaining after the fourth stage in all cycles, and without indication in the final profile of reflux buildup. However, the product solution analyses showed that internal reflux had started and then stopped between the eleventh and fifteenth cycles. Less than 2% of the input plutonium appeared in the product solution from the eleventh cycle and only ~25% in that from the thirteenth; then essentially all the plutonium held up appeared in the product solution from the fifteenth cycle. Thus, considerable plutonium may have refluxed into the third stage of the thirteenth cycle, but still only a trace appeared in the stripped organic from the fourth stage of the fourteenth cycle. The nitrate concentration in the final aqueous product solution was lower than expected, and varying nitrate-sulfate displacement in the first two stages may have caused the varying plutonium distribution. If so, it seems likely that the sulfate effect would not carry beyond the second or third stage, so that four stages should provide a sufficient operating margin.

The product solution from the last cycle contained 74 g of uranium and 17 mg of plutonium per liter, 0.25 M NO_3 and 2.4 M sulfate. This represents a recovery of >99%, and concentration by a factor of >30 for both uranium and plutonium, from the synthetic decladding solution containing 2.3 g of uranium and 0.48 mg of plutonium per liter.

Rate of Stripping. The equilibration time in the foregoing countercurrent batch stripping test was arbitrarily set at 5 min. A separate stripping test indicated that this was more than enough time for equilibration: A 2-liter batch of uranium-loaded extract was stripped with 5 M HNO_3 at a/o = 1/10 by stirring in a 4-liter beaker with a 2x1/2-in. flat paddle at a constant speed of ~2000 rpm, which gave considerably milder agitation than does shaking. The uranium distribution was close to equilibrium within 2 min (Table 4.9). After 60 min contact the phases were separated. A second 1/10 volume of 5 M HNO_3 stripped 95% of the remaining uranium.

Table 4.7. Uranium and Plutonium Stripping from Primary Amine

Extract: 0.3 M Primene JM in 85% Amsco 125-82—15% tridecanol, 6.5 g U/liter, 0.00155 g Pu/liter

Strip: 5 M HNO_3

Four-stage countercurrent batch equilibration, single-diamond pattern

Phase ratio a/o = 1/10, 5 min contact in Burrell shaker, room temperature

	U or Pu, g/liter				
	Loaded Strip[c]		Stripped Organic[d]		U Left,
Cycle[b]	Pu	U	Pu	U	%
1	0.0142	30			
2					
3	0.0163	47			
4			$<10^{-6}$[a]	0.054[a]	0.8
5	0.0120	57			
6			$<10^{-6}$	0.035	0.5
7	0.0141	70			
8			$<10^{-6}$	0.040	0.6
9	0.0246	67			
10			$<10^{-6}$	0.057	0.9
11	0.0002	74			
12			$<10^{-6}$	0.171	2.6
13	0.0037	76			
14			1.4×10^{-6}	0.182	2.8
15	0.0422	79			
16			$<10^{-6}$	0.010	0.15
17	0.0173	74			
18			$<10^{-6}$	0.012	0.18
Material balance	105%	115%			

[a]The stripping system was started with one 50-ml batch of organic extract contacting successive 5-ml batches of aqueous solution adjusted to 3 M HNO_3—2 M H_2SO_4, 4 M HNO_3—1 M H_2SO_4, 4.5 M HNO_3—0.5 M H_2SO_4, and 5 M HNO_3, and leaving the system in the fourth cycle as the first stripped organic.

[b]Cycles 1-11 were run in one day, 12-18 after a lapse of 2 days.

[c]Loaded strip = aqueous leaving first stage.

[d]Stripped organic = organic leaving fourth stage.

Table 4.8. Concentration Profile across Stripping System

Aqueous strip solution: 5 M HNO_3, a/o = 1/10

4-stage batch countercurrent system, single-diamond pattern[a]

	Organic In, 1st Stage	Organic Out			Aqueous Out		
		2nd Stage	3rd Stage[b]	4th Stage[c]	1st Stage[d]	2nd Stage	4th Stage
U, g/liter	6.5	0.74	0.05	0.012	74	89	0.40
Pu, mg/liter	1.55	0.34	<0.01	<0.001	17	7.5	0.005
H^+, M					5.6	4.5	4.5
NO_3^-, M					0.25	0.8	4.5
$SO_4^=$, M	0.25[e]	<0.01			2.4	2.2	<0.02

[a]Last cycle = cycle 17 for stages 1 and 3, cycle 18 for stages 2 and 4.

[b]Concentrations in organic leaving stage 3, cycle 17, calculated from concentration in organic and aqueous leaving stage 4, cycle 18.

[c]Stripped organic for recycle.

[d]Product solution.

[e]Sulfate in loaded organic extracted estimated on basis of $(RNH_3)_8U(SO_4)_6$ and RNH_3HSO_4, total $(RNH_3)^+$ = 0.3 M.

Table 4.9. Rate of Stripping

Loaded extract: 0.33 M Primene JM in 90% Amsco 125-82—10% tridecanol, 4.4 g U/liter

Strip: 5 M HNO_3, a/o = 1/10, stirred, room temperature

Strip Stage	Contact Time, min	U Distribution, g/liter		U Stripped, % of total	Approach to Equilibrium,%
		Aq	Org		
1	0	-	4.4	0	0
	1	24	1.96	56	75
	2	26	1.57	64	87
	4	28	1.44	67	91
	10	29	1.40	68	92
	~60	32	1.15	74	(100)
2	10	12	0.055	99	

4.4 Single-stage Recovery with Primary Amine

With the ability to extract Pu(III-IV) from ferrous sulfate solution containing only a slight amount of oxidant confirmed by the foregoing countercurrent extractions, the recoveries to be expected in single-stage extraction were calculated as a function of phase ratio and uranium loading. The estimates indicated that single-stage operation should be feasible for both uranium and plutonium. The use of single-stage continuous or batch extraction* instead of countercurrent extraction should permit a considerably simpler and cheaper installation for the scavenging process. The main consideration is the balancing of recovery against extract loading, especially as loading affects the amount of sulfate accompanying the recovered metals.

Single-stage U(IV) recovery can be high even at relatively high loading (Fig. 4.4). Assuming close to 100% equilibration in single-stage operation, at 85% loading of 0.3 M amine the extraction coefficient expected from the extraction isotherm is 1000, corresponding to 99.7% extraction at a/o = 2.5/1. As described above, the apparent extraction coefficient measured for Pu(III-IV) has varied considerably, and is expected to be affected more by minor variations in the system than are the coefficients for, e.g., U(IV), or Pu(IV) in oxidized solution. Hence a value from the lower part of the range observed, E_a^o(Pu-III,IV) ≈ 100 with 0.3 M amine, was used for the following estimates rather than the higher values found in the foregoing continuous extraction tests. The metal and sulfate extractions calculated on the basis of 3 g of uranium and 0.001 g of plutonium per liter and 0.3 M amine (Table 4.10) show that the minimum sulfate accompanying the recovered metals, at the highest uranium loading, will be about 2.4 g per gram uranium (Cf. Sect. 7.3). Without a second (plutonium) extraction, the theoretical uranium recovery can be raised to 98% with an increase to only 2.5 g of sulfate per gram of uranium. Plutonium can be recovered at ~90% (theoretical) with a further increase to 3.5 g/g and at ~95% with 4.5 g/g. Thus, most of the plutonium can be expected to be recovered in a single-stage extraction, without a very great increase in the sulfate carryover.

---

*Consecutive extraction of uranium and plutonium in one single-stage contactor. With a continuous-flow contactor, the aqueous solution would go to a hold tank between passes. The aqueous solution might remain in a batch contactor during uranium extraction and removal of organic, oxidant addition, and plutonium extraction.

Table 4.10. Effect of Phase Ratio on Calculated Metal Recovery and Sulfate Carryover

Consecutive single-stage batch U and Pu extractions

Feed: 3 g U/liter, 0.001 g Pu/liter

Extractant: 0.3 M amine

U Extraction				Pu Extraction			SO_4 in
a/o	U, g/liter	% Loading	Theoretical % Recovery	a/o	Theoretical % Recovery	Net a/o	Product, g/g U
100/28	8.70	97.5	80	(no Pu extraction)		100/28	2.4
100/35	8.4	94	98	100/35	97	100/70	6.0
				100/20	95	100/55	4.5
				100/10	91	100/45	3.5
				100/5	83	100/40	3.0
				(no Pu extraction)		100/35	2.5
100/40	7.5	84	99.7	100/40	98	100/80	6.9
				100/20	95	100/60	4.9
				100/10	91	100/50	3.9
				100/5	83	100/45	3.4
				(no Pu extraction)		100/40	2.9

4.5 Simultaneous Extraction with Mixed Primary and N-Benzyl Secondary Amines

As noted above, of the amines studied only the N-benzyl amines of certain secondary alkyls have shown high extraction power for U(VI) from high sulfate solutions. From sulfuric acid solutions extraction coefficients are low but usable (initial uranium concentration 1 g/liter, 1/1 phase ratio):

NBHA[a] Conc, M	Extraction Coefficients, E_a^o(U-VI)			
	3 M H_2SO_4	3 M H_2SO_4 + 1 M $(NH_4)_2SO_4$	1 M H_2SO_4 + 3 M $(NH_4)_2SO_4$	3 M SO_4 pH ~1
0.1	2	1	40	>1000
0.4	8			>1000

[a]NBHA = N-benzyl-1-(3-ethylpentyl)-4-ethyloctylamine

The corresponding Pu(IV) extraction coefficient from 3 M H_2SO_4 is higher (20 with 0.4 M NBHA, Table 4.1), so that plutonium recovery should be at least as good as uranium recovery. However, plutonium recovery can be more readily ensured by addition of a low concentration (0.05 M) of primary amine to the extractant.

The U(VI) extraction coefficient varies linearly with the free NBHA concentration, with the loading limit at a U/amine mole ratio of 1/6.[12] The extraction coefficient with 0.1 M uncomplexed NBHA from 3 M H_2SO_4—0.5 M Na_2SO_4 is ~2. The extraction isotherm calculated on this basis is shown in Fig. 4.8. The indicated flowsheet conditions (Fig. 4.9) have not been tested in countercurrent extraction. In this flowsheet the Fe(II) and U(IV) are oxidized with, for example, dichromate, avoiding excess oxidant. It is also assumed that nitrite will be used to help ensure that all the plutonium is Pu(IV); however, this may not be necessary, and it might be possible to leave some Fe(II) unoxidized. With this extractant, the uranium loading obtainable, and hence the phase ratio to provide capacity for a given uranium feed concentration, is set by the extraction coefficient instead of the stoichiometric loading limit (Fig. 4.8). The stripping and subsequent steps are similar to those in the preceding flowsheets.

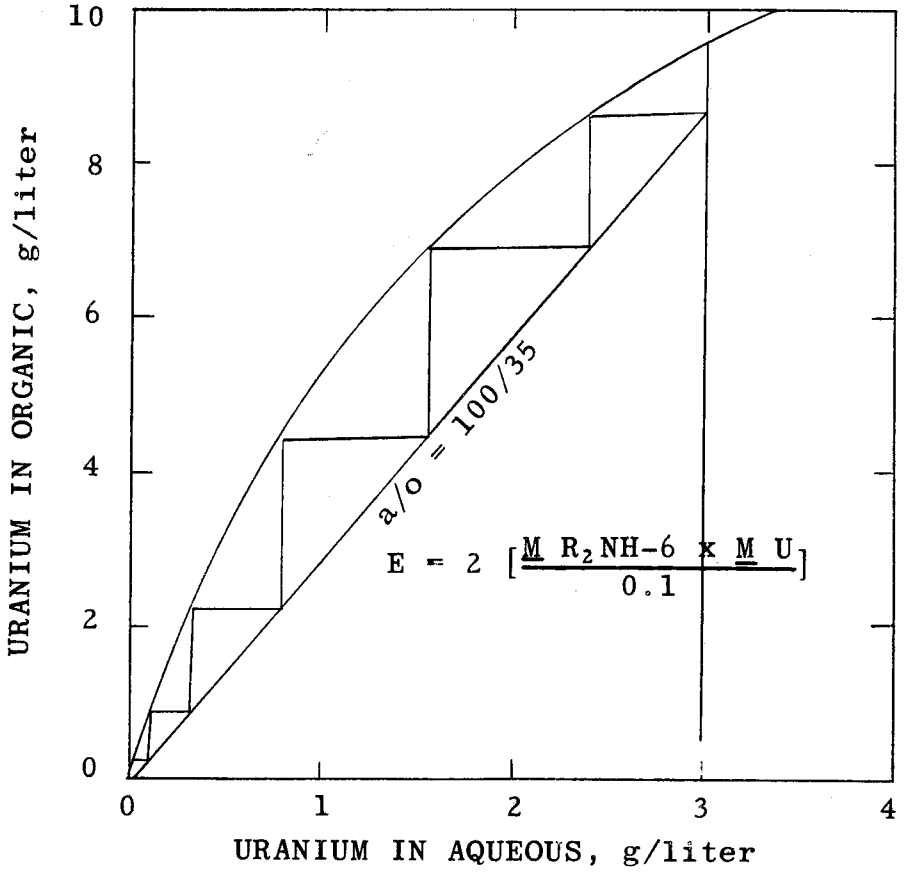

Fig. 4.8. Uranium extraction isotherm for extraction from 3 M H_2SO_4—0.5 M Na_2SO_4 by 0.4 M NBHA.

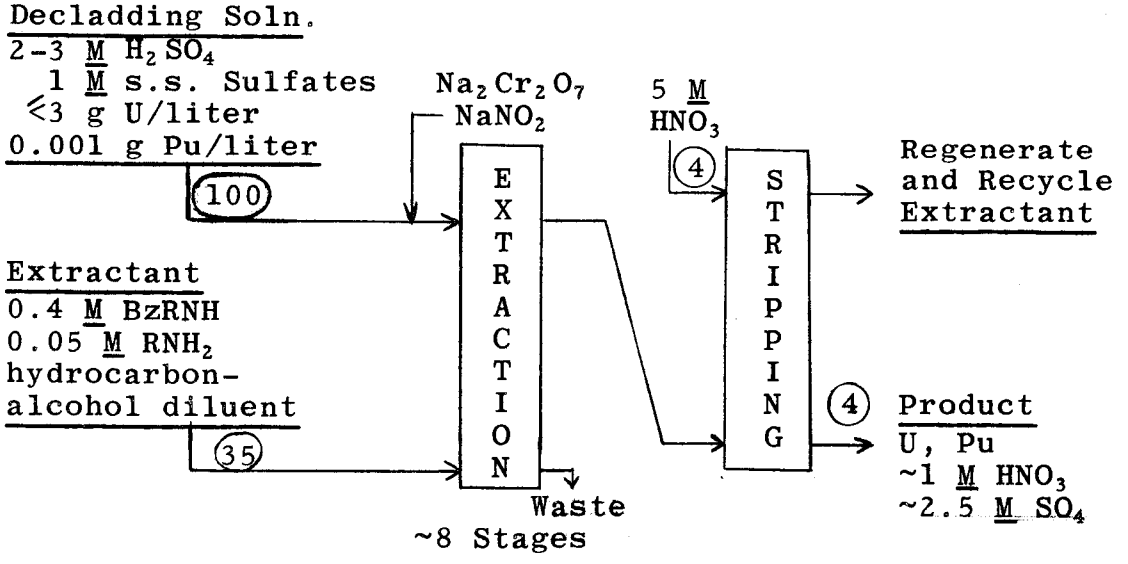

Fig. 4.9. Uranium and plutonium extraction with mixed N-benzyl secondary and primary amines. Circled numbers represent relative flows.

5.0 RECOVERY BY DIALKYLPHOSPHORIC ACID EXTRACTION

Dialkylphosphoric acids in hydrocarbon solution extract U(VI) by cation exchange with the ionizable hydrogen and formation of a series of uranyl-organophosphate complexes. The $U/(RO)_2PO_2H$ mole ratio approaches 1/2 at maximum loading but shows a considerable tendency to level off at 1/4. The extraction coefficient increases with the square of the extractant concentration, decreases with increasing aqueous sulfate concentration, and decreases with increasing aqueous acidity, partly compensated in the case of sulfuric acid by the decreased sulfate ionization at high acidity.[13] Uranyl extraction at low loading can be considerably enhanced by addition of a phosphate or phosphonate ester or a phosphine oxide.[14] Extractions from 3 M H_2SO_4—0.5 M Na_2SO_4 containing U(VI) at 1 g/liter gave $E_a^o(U)$ = 15 with 0.4 M di(2-ethylhexyl)phosphoric acid, D2EHPA, and $E_a^o(U)$ = 40 with 0.4 M D2EHPA in synergistic combination with 0.15 M TBP. Uranium(IV) extraction was low, E_a^o = 0.2, with the synergistic extractant combination.

Plutonium(IV) was extracted from 3 M H_2SO_4—0.5 M Na_2SO_4 with $E_a^o(Pu)$ = 50 with 0.4 M D2EHPA and $E_a^o(Pu)$ = 20 with 0.4 M D2EHPA—0.15 M TBP (Table 5.1). Preliminary tests with Pu(VI) showed it less extractable than Pu(IV),[10] and Pu(VI) extraction was not attempted from the stainless steel solutions.

Table 5.1. Plutonium Extraction from Sulfate Solutions by D2EHPA Alone and in Combinations

Initial Pu concentration; 10-20 mg/liter
Organic diluent: Amsco 125-82
Phase ratio: 1/1
Room temperature

D2EHPA Conc, M	E_a^o(Pu-VI), 5 M H_2SO_4	E_a^o(Pu-IV) 5 M H_2SO_4 + 0.5 M $NaNO_2$	E_a^o(Pu-IV) 3 M H_2SO_4 + 0.5 M Na_2SO_4 + ~0.5 M $NaNO_2$
0.4	0.4	~10	50
0.4 + 0.16 M Decanol	0.2	~3	-
0.4 + 0.15 M TBP	0.5	~3	20
0.4 + 0.10 M TOPO	5	~5	70
0.1 + 0.05 M TOPO	-	0.5	10

Extracted uranium can be stripped with concentrated acids or aqueous acidic complexing agents, but stripping with sodium carbonate solution is considerably more effective. To maintain miscibility of the resulting sodium dialkylphosphate, a hydrocarbon diluent must be modified by an additive such as the alcohol or neutral phosphorus compounds listed in Table 5.1.[13] Plutonium was stripped by 1 M Na_2CO_3 from the extracts produced in the extraction tests (Table 5.1), with stripping coefficients $S_o^a \approx 20$-30. Only low concentrations of plutonium, <20 mg/liter, were present in these and in the stripping tests described below. No attempt was made to establish the limiting solubility of plutonium in carbonate strip solution. However, in the course of purifying plutonium stock solution, 0.1 M D2EHPA—0.1 M tridecanol was loaded to 1 g of plutonium per liter and stripped to give 2 g/liter in 1 M Na_2CO_3, without any indication of third phase formation or precipitation. Any extracted iron precipitates in the carbonate solution, with the danger of causing emulsions; however, in raw materials extraction experience, moderate amounts of iron precipitate are tolerated.[15] If not separated, the iron will redissolve on acidification and accompany the uranium-plutonium nitrate product.

Extraction of Fe(II), Co(II), Ni(II), Cr(III), and Mn(II) by D2EHPA is low even from ~1 M sulfate at pH ~1,[15] and may be expected to be lower at higher acidity and sulfate concentration.

Iron(III) extraction coefficients were fairly low from ~3 M H_2SO_4 at low loading with 0.1 M D2EHPA (0.08) and with both 0.1 and 0.4 M D2EHPA in the presence of 0.05-0.1 M TOPO (0.02 and 0.03; 18 hr equilibration, Fe^{59} tracer). Since the iron extraction coefficients were expected to decrease in the presence of extracted uranium, iron extraction from oxidized 1 M stainless steel sulfate solution was expected to cause considerable contamination but not severe competition with uranium extraction. However, in a batch countercurrent extraction test with 0.4 M D2EHPA—0.15 M TBP from oxidized simulated decladding solution (Table 5.2), the iron extraction coefficients were ~0.1 in all stages, and competition by the iron depressed $E_a^o(U)$ to ~2 and $E_a^o(Pu)$ to <1.

It might be possible to obtain a feasible extraction system with D2EHPA for both uranium and plutonium by reducing a large fraction of the iron to Fe(II) so as to get an optimum balance between Fe(II)-Fe(III) and Pu(III)-Pu(IV). However, since this appeared less promising than primary amine extraction, it was not examined further for plutonium recovery.

Table 5.2. Countercurrent Batch Test of Uranium-Plutonium Extraction by D2EHPA-TBP

Batch equilibration, double diamond pattern, 4 cycles

Feed: 3 M H_2SO_4, 1 M s.s. sulfates, 3 g U(IV)/liter, 0.01 g Pu/liter

Extractant: 0.4 M D2EHPA—0.15 M TBP in Amsco 125-82

Phase ratio a/o = 3.1, 10 min contact in Burrell shaker, room temperature

		Profile Distributions, g/liter					
		Stage 1	Stage 2	Stage 3	Stage 4	Stage 5	Stage 6
Initial, Aq[a]	U	3	2.4	1.5	0.7	0.2	0.1
	Pu	0.01	0.008	0.005	0.0023	0.0007	0.0003
4th Cycle, Aq	U	2.5	2.0	1.5	0.6	0.2	0.008[b]
	Pu	0.005	0.004	0.004	0.004	0.003	0.0014
4th Cycle, Org	U	5.0[c]	3.7	3.0	1.1	0.5	0.09
	Pu	0.0009	0.0006	0.0005	0.0002	0.0001	0.00004
	Fe	3.7	3.8	4.0	4.2	4.4	4.1

[a]Extraction was started with the aqueous uranium and plutonium concentrations adjusted to approximately those in the expected steady-state profile.

[b]The raffinate uranium and plutonium concentrations from all four cycles were

	1st cycle	2nd cycle	3rd cycle	4th cycle
U, g/liter	0.006	0.001	0.004	0.008
Pu, g/liter	0.0002	0.0002	0.0005	0.0014

[c]The combined first stage organic solutions were stripped satisfactorily with 1.1 M Na_2CO_3 at a/o = 3/11. A heavy iron precipitate, ~20 mg of Fe_2O_3 per milliter, settled well into the aqueous phase and did not cause any emulsification.

5.1 Uranium Extraction from Uranium-Thorium Solution

D2EHPA extraction was examined for recovery of uranium from solutions containing negligible plutonium, e.g., from the decladding of fully enriched UO_2-ThO_2 fuels, according to the flowsheet (Fig. 5.1). This consists of redox adjustment of uranium to U(VI) and iron to Fe(II), countercurrent extraction with D2EHPA-TBP in a hydrocarbon diluent, either countercurrent or batch stripping with sodium carbonate, and destruction of carbonate with nitric acid for return of the recovered uranium to a Purex or Thorex cycle. The decladding

solution composition[16] was assumed to be 2-3 M H_2SO_4, 1 M stainless steel sulfates, and ≤2 g of thorium and 0.1 g of uranium per liter. Estimates based on theoretical extraction isotherms and the solubility limits of uranium in sodium carbonate strip solutions[17] indicated that a reagent concentration of ~0.3 M would permit the highest uranium concentration and uranium/sodium ratio in the product solution. The extraction isotherms were calculated on the basis of E = 40 with 0.4 M D2EHPA—0.15 M TBP, which was confirmed by E ≈ 25 in single batch extractions with 0.3 M D2EHPA—0.15 M TBP from the synthetic uranium-thorium-stainless steel decladding solution (Table 5.3).

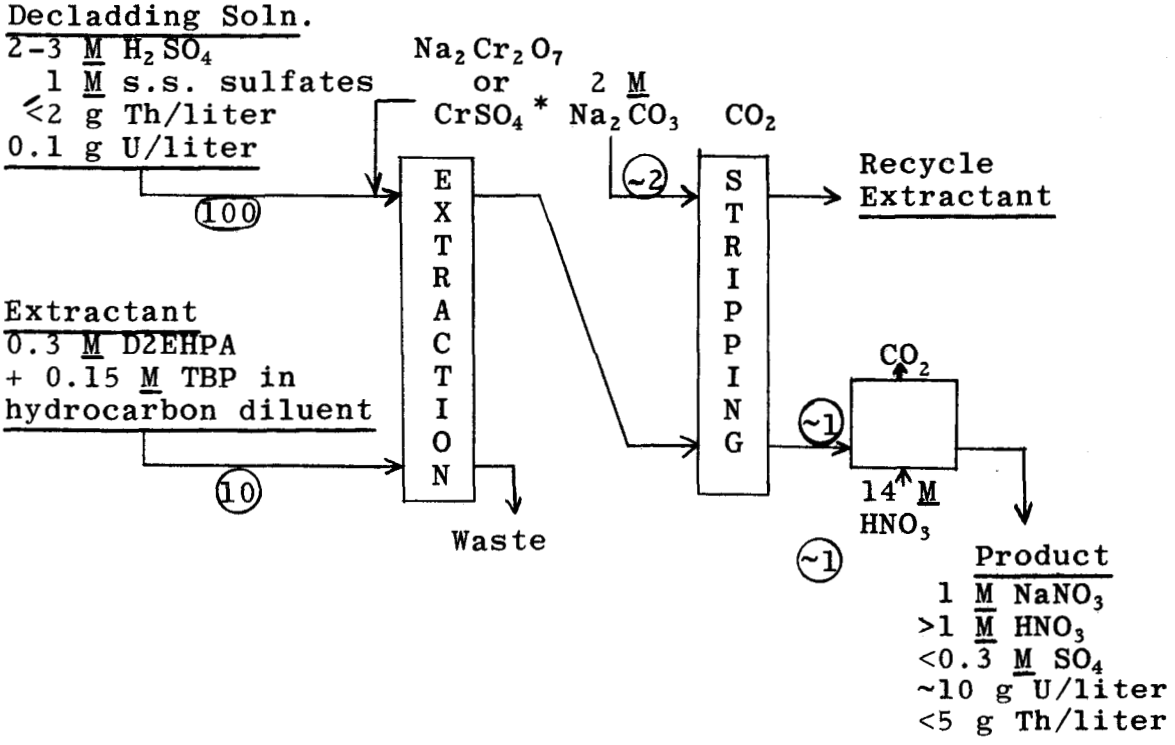

*$Na_2Cr_2O_7$ or $CrSO_4$ as required to adjust all the uranium to U(VI) and most of the iron to Fe(II).

Fig. 5.1. Uranium extraction with di(2-ethylhexyl)phosphoric acid. Circled numbers represent relative flows.

Table 5.3. Feed Solutions

Four 4-liter batches, each used for ~1.3 cycles of continuous extraction (Table 5.4)

	Run 1	Run 2	Run 3	Run 4
U, mg/liter	70	69	75	76
Th, g/liter	1.77	1.68	1.44	1.46
Fe, M[a]	0.67	0.60	0.53	0.55
Cr, M[b]	0.46	0.46	0.48	0.52
N, M	0.09	0.08	0.08	0.08
H^+, M	5.5	4.9	4.7	4.1
NO_3^-, M[c]	0.03	0.03	0.025	0.025
$SO_4^=$, M[d]	4.2	4	3.5	3.5
$E_a^o(U)$[e]	17	18	24	25
$E_a^o(Fe)$[e]	-	<0.001	<0.001	<0.001

[a] >98% of iron reduced to Fe(II).

[b] Includes $CrSO_4$ used to reduce iron.

[c] ~0.03 M nitrate from addition of thorium as $Th(NO_3)_4$.

[d] Concentrations calculated.

[e] Uranium and iron extraction coefficients were measured with each batch of feed solution by batch equilibration at a/o = 1/1 with 0.3 M D2EHPA—0.15 M TBP.

TBP was chosen as the synergistic modifier to be used with D2EHPA in this test partly because phosphine oxides, which give the greatest advantage in enhanced uranium coefficients, are not now available in commercial quantities and partly because the use of TBP does not contribute any additional danger of reagent carryover to the main cycle.

A bank of eight mixer-settlers of the same type as those used for amine extraction (Sect. 4.2) was used for continuous countercurrent extraction. The aqueous stream at 50 ml/min and the extractant stream at 5 ml/min were metered by bellows pumps. The feed solution was reduced to 100-200 mv* with ~100 ml of chromous sulfate solution per liter (~1 M $Cr_2(SO_4)_3$

*Pt-SCE, higher positive emf indicating higher oxidation.

reduced with amalgamated zinc). Less than 2% of the iron remained as Fe(III), as shown by comparison of batch extractions with and without addition of a 2% Fe(III) spike. Four batches of synthetic feed were run in succession. At the completion of each batch, the mixers were stopped and the separated phases were sampled. There was no flow between units with the mixers stopped, so that the concentration profile was not lost during changeover and sampling.

The end concentrations for the four profiles measured are shown in Table 5.4, indicating ~95, 95, 97, 97% recovery at 1.2, 2.5, 3.8, and 5.0 cycles.* The final profile (Fig. 5.2) shows a nearly constant extraction of 60-65% per stage, $E_a^o = 17$. The final profile is also shown in a McCabe-Thiele diagram (Fig. 5.3) for comparison with the calculated uranium extraction isotherm. Significantly low stage efficiency was expected because the mixer-settlers used were not designed to handle flow ratios far from 1/1. The failure of the upper points in Fig. 5.3 to reach the equilibrium curve appears to confirm this. The failure of the lower points to reach the operating line suggests that some backmixing between stages occurred. The apparent stage efficiency** averaged ~50%. Thus, in an extraction system with high stage efficiency, nearly complete uranium recovery could be expected in rather fewer than eight stages. However, high recovery could not be obtained in a single stage, unless the feed/extractant ratio approached 1/1.

A portion of the composited organic product from the extraction test was stripped in two batch stages (not countercurrent) with 2 M Na_2CO_3 at a/o = 87.5/500 initial, 58/530 final in the first stage and 87.5/530 in the second stage. The phase ratio changed in the first stage because of extraction of water with the sodium ion. About 90% of the uranium was removed by the first strip, and <1% remained in the organic after the second strip (Table 5.5). A small amount of water-soluble thorium-bearing precipitate separated during the first strip, indicating that with this much thorium present (equivalent to ~2 g per liter of aqueous at a/o = 1/10) a larger volume of less concentrated sodium carbonate solution should be

---

*One cycle = one estimated displacement of the organic phase through the extraction system.

**Ratio of the uranium concentration increment between aqueous samples to the uranium concentration increment between operating line and equilibrium curve.

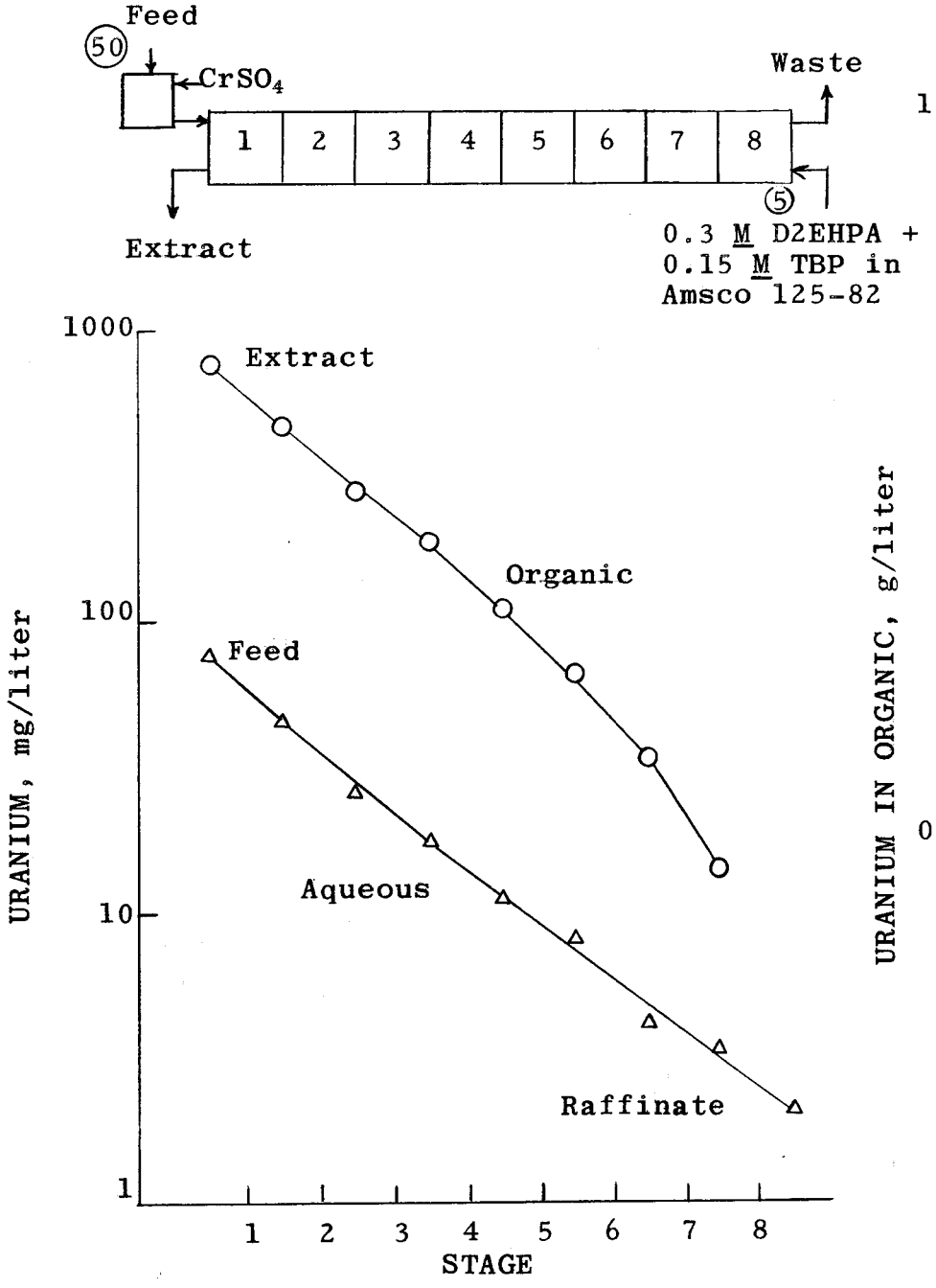

Fig. 5.2. Concentration profile through extraction system. Uranium extraction by D2EHPA-TBP, after five cycles.

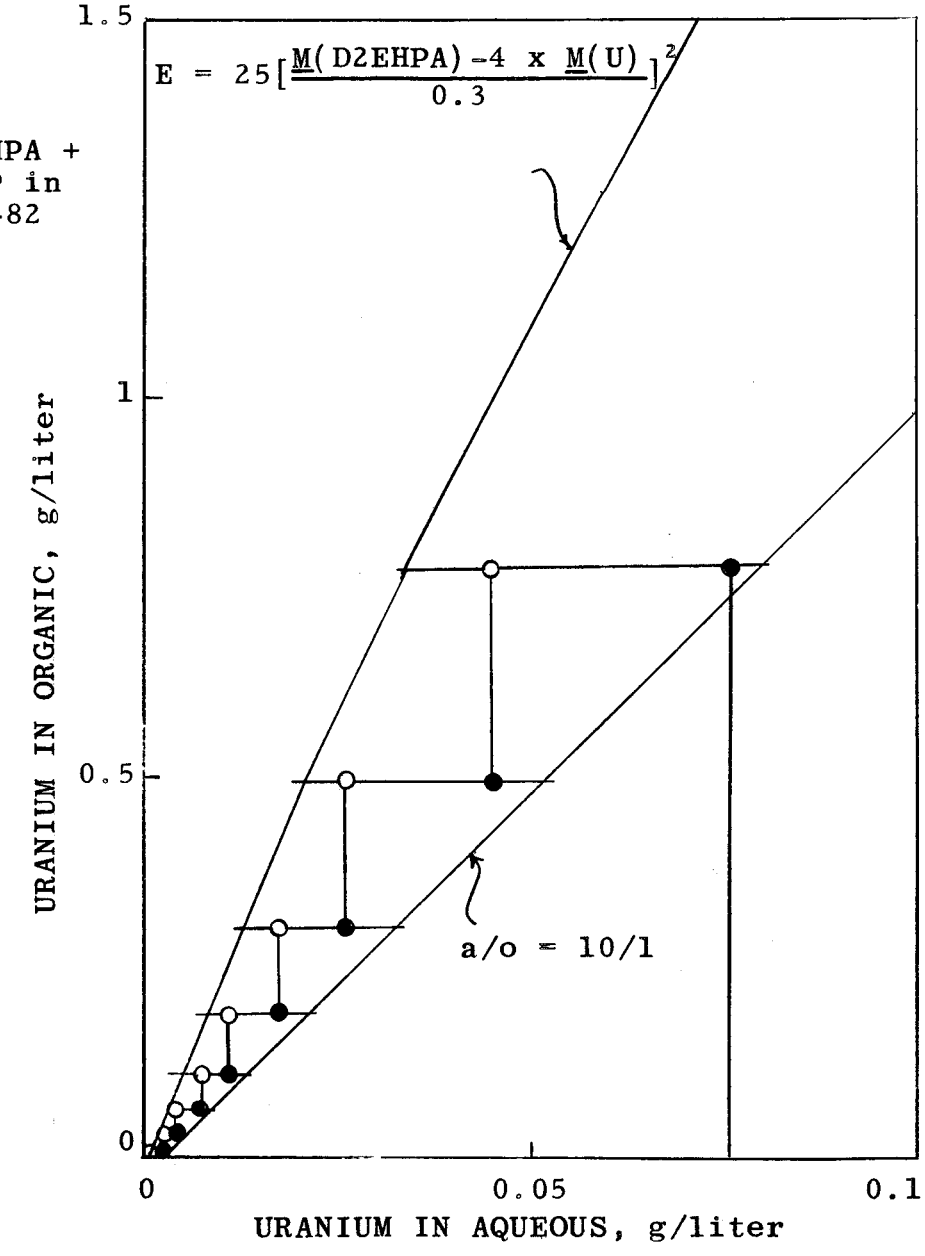

Fig. 5.3. Comparison of concentration profile with calculated extraction isotherm. Uranium extraction by D2EHPA-TBP.

used.* The first strip was acidified with 1/5 its volume of 14 M HNO_3, giving a product solution containing 4.5 g of uranium, 1.5 g of thorium, and 0.2 g of iron per liter and $<3x10^{-4}$ M sulfate in ~2 M $NaNO_3$—0.5 M HNO_3.

Table 5.4. Uranium Recovery from Sulfuric Acid Stainless Steel Dissolver Solution by Extraction with D2EHPA-TBP

Feed (synthetic): 2-3 M H_2SO_4, ~1 M stainless steel sulfates, ~1.5 g Th/liter, ~0.07 g U/liter

Extractant: 0.3 M D2EHPA + 0.15 M TBP in Amsco 125-82

Continuous countercurrent extraction in eight mixer-settlers

Phase ratio, a/o = 50/5

Run started with barren aqueous in settlers

	U Distribution, mg/liter			$E_a^o(U)$	
Cycle[a]	Feed	Raffinate	Extractant	1st Stage	2nd Stage
1.2	70	3.7	590	12	12
2.5	69	3.5	710	16	14
3.8	75	2.1	790	19	21
5.0	76	2.1	775	17	19

[a]One cycle = one estimated displacement of the slower (i.e., organic) stream through the extraction system.

*Thorium is soluble to ~10 g/liter in ~1 M $NaHCO_3$—0.5 M Na_2CO_3 solution, in equilibrium with solid $Na_6Th(CO_3)_5 \cdot 12\ H_2O$ and $NaHCO_3$.[18] The strip solution was estimated to be ~2 M $NaHCO_3$, so that a rather higher thorium solubility than ~2 g/liter would be expected unless it was decreased by the presence of the uranium at ~0.02 M. It may have been a non-equilibrium precipitate, locally formed but slow to redissolve. This should be checked under operational conditions if actual decladding solutions prove to carry as much thorium as was assumed for this test.

Table 5.5. Sodium Carbonate Strip of D2EHPA-TBP Extract

Extract: 0.3 M D2EHPA + 0.15 M TBP in Amsco 125-82, composite of loaded solutions from countercurrent extraction test

Strip: 2 M Na_2CO_3, 2-stage batch contact

Contact: handshaking in stoppered cylinder, 3 min, room temperature

Phase	Vol, ml	Distribution, g/liter				U Distribution, %
		U	Th	Fe	SO_4	
Organic extract	500	0.70	0.24	0.025		(100)
Strip 1	58[a]	5.3				89
Strip 2	87.5	0.56				14
Stripped organic	530	0.0055				0.8
Strip 1, acidified	(70)[b]	4.5	1.5	0.2	<0.03	

[a]Initial volume 87.5 ml; decreased by ~30 ml and organic volume increased by ~30 ml because of water extracted on conversion of D2EHPA to its sodium salt.

[b]25 ml of strip 1 + 5 ml 14 M HNO_3; final gross composition 1.8 M $NaNO_3$—0.5 M HNO_3.

6.0 RECOVERY BY PHOSPHINE OXIDE EXTRACTION

Phosphine oxides extract U(VI) from acidic solution as a neutral complex, similarly to TBP but with a higher order of extraction power and without the need of nitrate salting. Although U(VI) extraction with phosphine oxides is low from sulfate solutions, it is fairly strong from sulfuric acid solutions, $E_a^o \approx 20$ from 1 to 6 M H_2SO_4 with 0.3 M tridecylphosphine oxide[19] and 17 from 3 M H_2SO_4—0.5 M Na_2SO_4 with 0.3 M trioctylphosphine oxide (TOPO). Extraction decreases with increasing concentration of sulfate salt and becomes low if most of the acid is neutralized, $E_a^o \approx 0.1$ from 3 M $(NH_4)_2SO_4$ solution at pH 1. Even in the presence of considerable sulfate, uranium extraction coefficients can be increased, if necessary, by adding a relatively small amount of nitrate.[19]

Plutonium(IV) extraction was also fairly high from sulfuric acid solution but low from ammonium sulfate solution

(TOPO in Amsco 125-82):

TOPO Conc, M	Species Extracted	Extraction Coefficient 5 M H_2SO_4	3 M H_2SO_4	3 M SO_4, pH ~1
0.3	Pu(IV)	20	30	0.1
	Pu(VI)	4		
0.1	Pu(IV)		5	0.1
	Pu(III)		0.4	

In some tests with 5 M H_2SO_4 (but not with 3 M H_2SO_4) the 0.3 M TOPO-Amsco solution separated into two organic phases.

Ferric iron extraction was low (E_a^o = 0.005 from 3 M H_2SO_4 with 0.1 M TOPO), and the extraction of ferrous iron and the other stainless steel metal ions may be expected to be still lower.[19]

Extracted uranium is readily stripped with sodium carbonate solution. Similarly, the extracted Pu(IV) was stripped completely from 0.3 M TOPO by 1 M Na_2CO_3 solution at a phase ratio of 1/1. There was no evidence of plutonium precipitation at the resulting concentration of 20 mg/liter. (As noted above, plutonium concentrations up to 2 g/liter in 1 M Na_2CO_3 have been obtained, in stripping from D2EHPA extracts, without precipitation.) Neither uranium nor plutonium was stripped effectively from phosphine oxide with water.[10,19]

The uranium extraction isotherm calculated for 0.3 M TOPO, using E_a^o = 20 at 0.3 M uncomplexed reagent concentration (Fig. 6.1), indicates 4 ideal stages for >99% recovery of uranium from a 3-g/liter uranium feed at a phase ratio set to give a concentration factor of 4. Since the extracted plutonium cannot contribute significantly to the loading, and $E_a^o(Pu) > E_a^o(U)$, plutonium recovery should be at least as good as the uranium recovery.

A flowsheet based on the foregoing results is shown in Fig. 6.2. This has not been tested in countercurrent extraction.

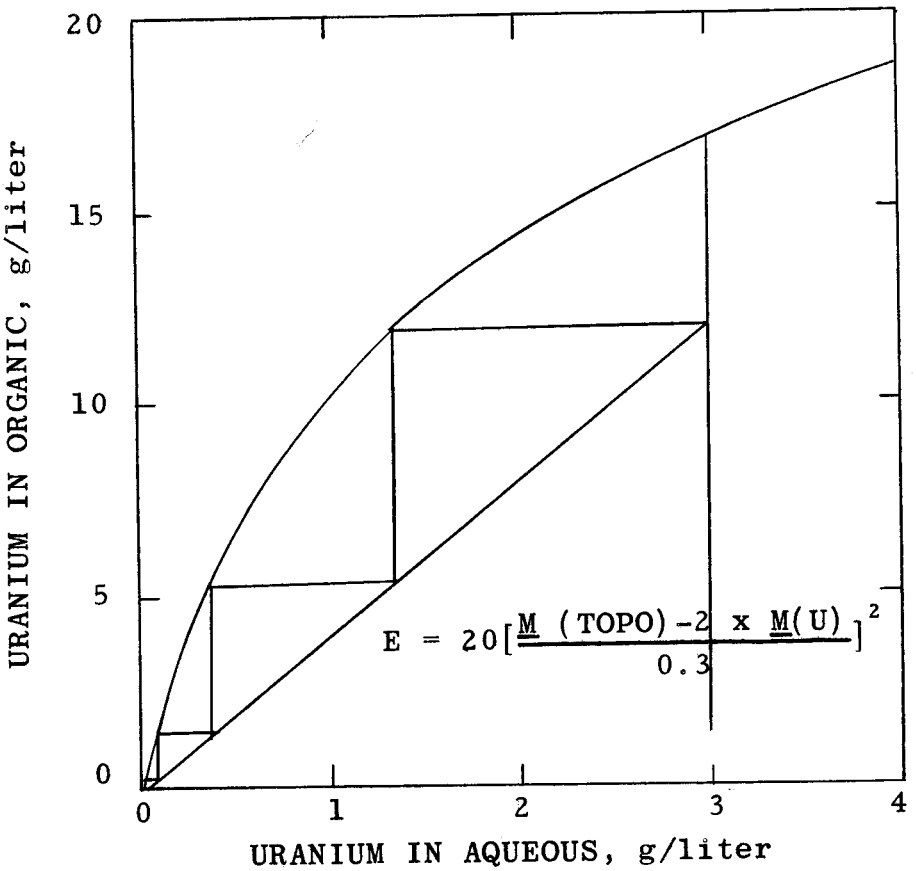

Fig. 6.1. Uranium extraction isotherm for extraction from 3 M H_2SO_4—0.5 M Na_2SO_4 by 0.3 M TOPO in Amsco 125-82.

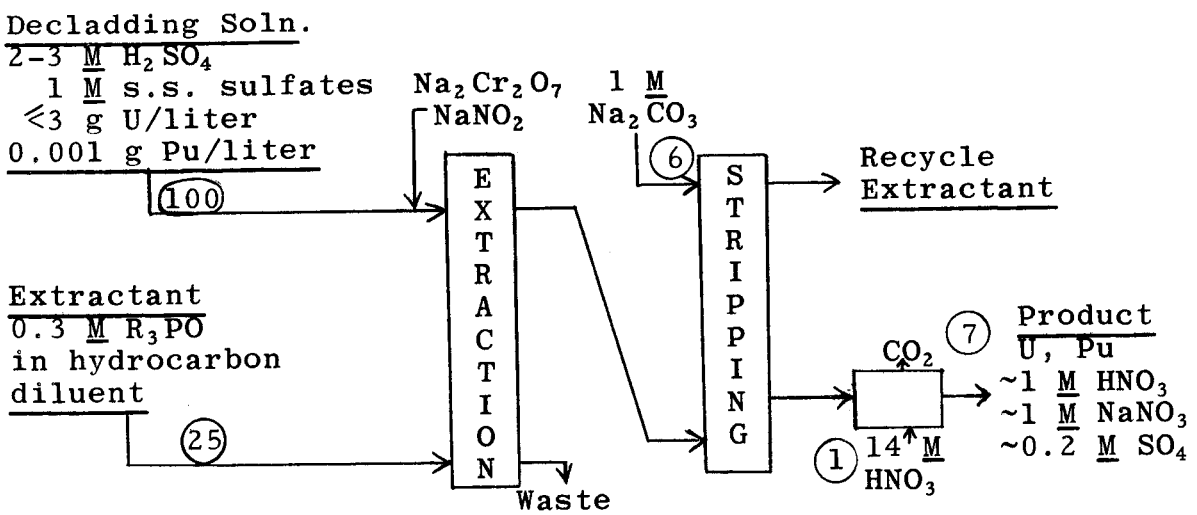

Fig. 6.2. Uranium and plutonium extraction with trialkylphosphine oxide. Circled numbers represent relative flows.

7.0 REAGENT LOSS AND CARRYOVER

7.1 Reagent Loss

The required makeup of extractant will depend on losses by solubility in the aqueous streams, by entrainment in those streams, and by degradation. Degradation due to irradiation cannot be predicted at present beyond noting that irradiation tests so far indicate no unusual susceptibility to damage.[20] Chemical degradation should be negligible in comparison with entrainment losses, even for hydrolysis of the ester linkages of D2EHPA.[21]

Entrainment of as much as 1 ml of extractant per liter of sulfate raffinate would result in loss, per liter of raffinate, of 120 mg of TOPO from 0.3 M solution, 130 mg of D2EHPA from 0.4 M, 90 mg of Primene JM from 0.3 M, and 140 mg of NBHA from 0.4 M. On the basis of 4 liters of sulfate waste solution per kilogram of uranium reprocessed, together with not more than 1 liter of strip solution plus scrub or regeneration solution carrying the same assumed entrainment loss, these values correspond to entrainment losses of less than 1 g of each reagent per kilogram of total uranium, or <100 g per kilogram of scavenged uranium at 1% uranium dissolution.

Loss by solubility of prescrubbed Primene JM* in the aqueous streams might approach the foregoing assumed entrainment loss, but aqueous solubility of the other reagents named is much lower. Prescrubbed Primene JM* is soluble in typical sulfate ore leach liquors to the extent of 30-50 mg/liter.[22,23] Amine salt solubility increases with acidity but decreases with total ionic concentration, so that loss to the decladding solution will probably not be much greater and may be less than 50 mg/liter.

---

*Primene JM is a homologous mixture, averaging around 20 carbon atoms. The salts of the lighter amines in the mixture are lost relatively rapidly to dilute aqueous solutions. Hence, for all the tests reported here the stock reagent solution was prescrubbed with 25 vol of 0.2 M H_2SO_4 in order to approximate the steady-state composition of recycled reagent. Such prescrubbing is not required in a process application where reagent loss is the only consideration but may be needed when reagent carryover is a matter of concern.

7.2 Reagent Carryover

Potential carryover of reagent into the main cycle by solubility and entrainment in the strip solution is a more important consideration than the cost of lost reagent. It may be necessary to scrub the product solution with barren hydrocarbon diluent, at least as a precautionary safeguard, unless a re-extraction or other coupling step is added to the flowsheets considered here. Of the reagents being considered, tolerance limitations will probably be most strict on buildup for D2EHPA, but on carryover for TOPO. D2EHPA could not be permitted to build up the total dialkylphosphoric acid content of the TBP stream significantly higher than the level already reached by DBP from degradation of the TBP. D2EHPA should be removed by an alkaline scrub nearly as effectively as is DBP provided that a wash with water or sufficiently dilute alkaline solution is used to give sufficient aqueous solubility of the higher weight organophosphate salt.

The first deleterious effect of phosphine oxide would probably be interference with water stripping of the TBP. Since $E_a^o(Pu)$ from 0.1 M nitrate solution by 0.1 M TOPO is less than 50[10] and $E_a^o(U)$ is less than 500[19] and is proportional to the square of the TOPO concentration, buildup to 10^{-3} M TOPO in the TBP might have some effect on stripping, but 10^{-4} M should have no effect.

If the only effective bleed of contaminating TOPO from the TBP stream is by entrainment loss of the latter in the main cycle raffinate, and if that entrainment is similar in degree to entrainment of the 0.3 M TOPO solution in the strip solution, then, without scrubbing, the steady-state concentration of TOPO in the TBP stream would be 0.3 M times the ratio of the TOPO strip solution volume to the main cycle aqueous stream volume. If that ratio were as high as 1/10, then 99% of the entrained TOPO would have to be scrubbed out of the strip solution to prevent the buildup from approaching 10^{-3} M.

It is not obvious that some carryover of primary or secondary amine would be dangerous, since it would not be expected to harm either selectivity or stripping. Appreciable solubility in the large volume of nitrate raffinate should prevent buildup of Primene JM.

7.3 Sulfate Carryover

Sulfate is extracted as a part of the uranium complex and as free acid by both amines and phosphine oxides, and it is stripped along with the uranium. Without uranium, 0.3 M amine contains between 0.15 and 0.3 M ($SO_4^{=}$ + HSO_4^-), close to 0.3 M

after equilibration with 3 M aqueous sulfuric acid. When loaded with U(IV) sulfate to the limiting mole ratio of 1/8, 0.3 M primary amine contains 0.225 M sulfate. When loaded with uranyl sulfate to the limiting mole ratio of 1/6, 0.4 M secondary amine contains 0.27 M sulfate. Phosphine oxide extracts sulfuric acid to about 1 H_2SO_4/2 R_3PO from aqueous solutions at high concentration and to about 1/4 from 3 M,[19] or 0.05-0.1 M sulfate in 0.3 M phosphine oxide. When loaded with uranyl sulfate to the limiting mole ratio of 1/2, this increases to 0.15 M sulfate. Dialkylphosphoric acid does not extract sulfuric acid directly or with the extracted uranyl ion. Some sulfuric acid will be extracted by phosphine oxide or (to a lesser extent) by TBP when added as a modifier to D2EHPA. These bases for estimating the sulfate extraction were confirmed by sulfate determination after plutonium stripping tests which followed extraction tests from 5 M H_2SO_4 and after the continuous countercurrent extractions:

Extractant	Conc, M	Solution	Estimated	Found
NBHA	0.3	HNO_3	0.30	0.22
	0.4	HNO_3	0.42	0.47
TOPO	0.3	Na_2CO_3	0.16	0.15, 0.18
D2EHPA + TOPO	0.4 0.1	Na_2CO_3	0.03[a]	0.02, 0.05
Primene JM	0.3	HNO_3	2.40	2.4[c]
D2EHPA + TBP	0.3 0.15	Na_2CO_3	0.02[b]	<0.001[d]

[a]Estimated sulfate extraction by the TOPO only.

[b]Estimated sulfate extraction by the TBP only.

[c]From Table 4.8.

[d]From Table 5.5.

From the foregoing it is obvious that the amount of sulfate carried with the scavenged uranium to the main cycle by a given extractant will depend more on the uranium capacity provided for (i.e., the quantity of the extractant) than on the amount of uranium actually scavenged. The tests and calculations in this report are based on provision for scavenging uranium at concentrations up to 3 g/liter in the decladding solution, equivalent to dissolution of ~1% of the total uranium. With the reagent concentrations and flow ratios in the various flowsheets set to provide capacity for this much uranium, and ~3 liters main cycle feed solution per kilogram

of total uranium,[1] sulfate introduced with the scavenged uranium into the main cycle feed would be ~0.1-0.15 M after extraction with amines, ~0.01-0.02 M after extraction with TOPO, and <0.01 M after extraction with D2EHPA-TBP. These would decrease proportionately if the flow ratios were set for a lower quantity of uranium to be scavenged.

The sulfate carried by the TOPO or the D2EHPA-TBP extractant can be eliminated, if desired, by a dilute nitric acid scrub of the loaded extractant before stripping. Sulfate cannot be eliminated from the loaded amine extractants by a simple scrub. Here sulfate elimination, if needed, will call for an additional step, e.g., hydrolytic precipitation and redissolution in nitric acid, or salting with aluminum nitrate and re-extraction with TBP.

7.4 Sodium Ion and Product Solution Volume

The sodium ion introduced into the main cycle from the sodium carbonate stripping of D2EHPA or TOPO will amount to 4 moles of sodium per mole of uranium [i.e., $Na_4UO_2(CO_3)_3$ acidified to 4 $NaNO_3$ + $UO_2(NO_3)_2$], plus the sodium from the excess carbonate provided in stripping. With the concentrations and flow rates shown in the D2EHPA and TOPO flowsheets and ~3 liters of main cycle feed solution per kilogram of total uranium, this would introduce 0.05 M sodium into the main cycle feed stream after the TOPO extraction or 0.08 M sodium after the D2EHPA-TBP extraction. If this is excessive for direct introduction into the main cycle feed, a precipitation step or re-extraction as suggested above for sulfate elimination is indicated.

On the same basis, the volume of scavenged uranium-plutonium product solution to be returned to the main cycle would be of the order of 5% of the main cycle feed volume and would decrease proportionately if the flow ratios were set for a lower quantity of uranium to be scavenged. The effect of this much volume increment, if it is important, might be eliminated by using the acidic strip solution as a part of the dissolver acid or a part of the centrifuge rinse. (The latter is shown in the Sulfex flowsheet[1] as ~8% of the adjusted feed volume.)

It should be noted that all discussion of material carry-over in the foregoing paragraphs is based on the assumption that the main cycle is operating on Sulfex feed only. If other feeds also enter the main cycle, the tolerance for volume and for reagent, sulfate, and sodium content of the Sulfex decladding scavenger product stream should increase in direct proportion to the blending ratio available.

8.0 REFERENCES

1. J. R. Flanary, W. E. Clark, J. H. Goode, and A. H. Kibbey, "Development of the Sulfex Process for Decladding Stainless-Steel-Clad Power Reactor Fuel Elements with Sulfuric Acid," ORNL-2461 (March 13, 1959).

2. J. R. Flanary and J. H. Goode, "Preparation of Solvent Extraction Feeds from Irradiated Yankee Atomic Fuel Specimens by the Batch Darex and Sulfex Processes," ORNL-CF-58-4-110 (April 10, 1958).

3. K. B. Brown et al., "Solvent Extraction Processing of Uranium and Thorium Ores," P/509, Proc. 2nd Internatl. Conf. Peaceful Uses Atomic Energy, Vol. 3, P. 472, U. N., New York, 1958.

4. W. C. Waggener, "Thorium Sulfate Solubilities," letter to A. M. Weinberg, ORNL, April 17, 1953.

5. Armour and Company Research Division, Chicago, "Research Circular RC II: The Amines."

6. C. F. Coleman, K. B. Brown, J. G. Moore, and D. J. Crouse, "Solvent Extraction with Alkyl Amines," Ind. Eng. Chem., 50: 1756 (1958).

7. K. B. Brown et al., "Progress Report on Raw Materials for May, 1957," ORNL-2366.

8. D. J. Crouse and J. O. Denis, "The Use of Amines as Extractants for Thorium (and Uranium) from Sulfuric Acid Digests of Monazite Sands," ORNL-1859 (Feb. 1, 1955).

9. D. J. Crouse and K. B. Brown, "Amine Extraction Processes for Uranium Recovery from Sulfate Liquors, Vol. I," ORNL-1959 (Sept. 30, 1955).

10. B. Weaver and D. E. Horner, "Distribution Behavior of Neptunium and Plutonium between Acid Solutions and Some Organic Extractants," presented at ACS Meeting, Boston, 1959; submitted for publication in J. Chem. Eng. Data.

11. B. Weaver and F. A. Kappelmann, "Purification of Promethium by Liquid Extraction," ORNL-CF-59-7-6; to be presented at AIChE Meeting, San Francisco, December, 1959.

12. K. B. Brown, "Progress Report on Raw Materials for December, 1957," ORNL-2486.

13. C. A. Blake, C. F. Baes, Jr., and K. B. Brown, "Solvent Extraction with Alkyl Phosphoric Compounds," Ind. Eng. Chem., 50: 1763 (1958).

14. C. A. Blake, D. E. Horner, and J. M. Schmitt, "Synergistic Uranium Extractants: Combination of Neutral Organophosphoric Compounds with Dialkylphosphoric Acids," ORNL-2259 (Feb. 10, 1959).

15. C. A. Blake, K. B. Brown, and C. F. Coleman, "The Extraction and Recovery of Uranium (and Vanadium) from Acid Liquors with Di(2-ethylhexyl)phosphoric Acid and Some Other Organophosphorus Acids," ORNL-1903 (May 13, 1955).

16. L. M. Ferris and A. H. Kibbey, "Sulfex Process for the Dissolution of Consolidated Edison Power Reactor Fuel: Laboratory Development," ORNL-2714 (in press).

17. C. A. Blake et al., "Studies in the Carbonate-Uranium System," J. Am. Chem. Soc., 78: 5978 (1956).

18. F. A. Schimmel, unpublished data, ORNL, 1955.

19. C. A. Blake, K. B. Brown, and C. F. Coleman, "Solvent Extraction of Uranium (and Vanadium) from Acid Leach Liquors with Trialkylphosphine Oxides," ORNL-1964 (Aug. 26, 1955).

20. R. M. Wagner and L. H. Towle, "Radiation Stability of Organic Liquids," ORNL Subcontract 1081, Semiannual Reports 3 (June 30, 1958) and 4 (Jan. 5, 1959).

21. K. B. Brown et al., "Progress Report on Raw Materials for October, 1959," ORNL-2451.

22. J. G. Moore, K. B. Brown, and C. F. Coleman, "Further Studies of Amines as Extractants for Uranium from Acid Sulfate Solutions," ORNL-1922 (June 24, 1955).

23. D. J. Crouse and K. B. Brown, "Recovery of Thorium, Uranium, and Rare Earths from Monazite Sulfate Liquors by the Amine Extraction (Amex) Process," ORNL-2720 (July 16, 1959).

Notebook References: Notebooks, assigned to D. E. Horner, No. 5905, pp 2-28, No. 5869, pp 41, 42, 48-52, 56-63, 65-79, 86, 90-100, No. 5672, pp 1-20, 25-43, 59, 65, No. 5747, 5-18, 23-26.

ORNL-2830
Chemistry-Separation Processes
for Plutonium and Uranium
TID-4500 (15th ed.)

INTERNAL DISTRIBUTION

1. C. E. Center
2. Biology Library
3. Health Physics Library
4-5. Central Research Library
6. Reactor Experimental Engineering Library
7-26. Laboratory Records Department
27. Laboratory Records, ORNL R.C.
28. A. M. Weinberg
29. L. B. Emlet (K-25)
30. J. P. Murray (Y-12)
31. J. A. Swartout
32. E. H. Taylor
33. E. D. Shipley
34. M. L. Nelson
35-36. F. L. Culler
37. W. H. Jordan
38. J. B. Adams
39. J. H. Frye, Jr.
40. S. C. Lind
41. G. I. Cathers
42. A. Hollaender
43. F. F. Blankenship
44. M. T. Kelley
45. C. F. Coleman
46. R. S. Livingston
47. C. P. Keim
48. D. J. Crouse
49. C. E. Winters
50. A. D. Ryon
51. D. Phillips
52. W. K. Eister
53. F. R. Bruce
54. D. E. Ferguson
55. R. B. Lindauer
56. H. E. Goeller
57. R. A. Charpie
58. M. E. Whatley
59. M. J. Skinner
60. R. E. Blanco
61. G. E. Boyd
62. W. E. Unger
63. R. R. Dickison
64. A. T. Gresky
65. E. D. Arnold
66. C. E. Guthrie
67. J. W. Ullmann
68. K. B. Brown
69. K. O. Johnsson
70. B. Weaver
71. J. C. Bresee
72. C. A. Blake
73. J. G. Moore
74. K. A. Allen
75. A. R. Irvine
76. W. D. Arnold
77. C. W. Hancher
78. D. E. Horner
79. F. J. Hurst
80. B. B. Klima
81. W. E. Clark
82. W. J. McDowell
83. J. M. Schmitt
84. F. G. Seeley
85. J. S. Drury
86. J. C. White
87. J. T. Long
88. R. E. Leuze
89. R. A. McNees
90. J. T. Roberts
91. J. R. Flanary
92. W. Davis
93. R. H. Rainey
94. R. G. Mansfield
95. F. A. Kappelmann
96. E. M. Shank
97. J. O. Blomeke
98. C. D. Watson
99. W. H. Lewis
100. E. Lamb
101. J. H. Goode
102. A. H. Kibbey
103. L. M. Ferris
104. W. R. Grimes
105. P. M. Reyling
106. M. Benedict (consultant)
107. D. L. Katz (consultant)
108. C. E. Larson (consultant)
109. J. H. Rushton (consultant)
110. I. Perlman (consultant)
111. H. Worthington (consultant)
112. ORNL - Y-12 Technical Library, Document Reference Library

113. Division of Research and Development, AEC, ORO
114. H. L. Hazen, Farmer's Union Bldg., Denver, Colorado
115. M. E. Wadsworth, University of Utah
116-124. E. C. Van Blarcom, Division of Raw Materials, Washington
125-638. Given distribution as shown in TID-4500 (15th ed.) under Chemistry-Separation Processes for Plutonium and Uranium category (75 copies - OTS)