4

MARTIN MARIETTA ENERGY SYSTEMS LIBRARIES

3 4456 0351175 0

ORNL-2784
Reactors-General

DESIGN OF CHEMICAL PROCESSING PLANT FOR HOMOGENEOUS REACTOR TEST

A. M. Rom
H. O. Weeren

CENTRAL RESEARCH LIBRARY
DOCUMENT COLLECTION
LIBRARY LOAN COPY
DO NOT TRANSFER TO ANOTHER PERSON
If you wish someone else to see this document, send in name with document and the library will arrange

OAK RIDGE NATIONAL LABORATORY
operated by
UNION CARBIDE CORPORATION
for the
U.S. ATOMIC ENERGY COMMISSION

Printed in USA. Price $2.50. Available from the

Office of Technical Services
Department of Commerce
Washington 25, D.C.

LEGAL NOTICE

This report was prepared as an account of Government sponsored work. Neither the United States, nor the Commission, nor any person acting on behalf of the Commission:

A. Makes any warranty or representation, expressed or implied, with respect to the accuracy, completeness, or usefulness of the information contained in this report, or that the use of any information, apparatus, method, or process disclosed in this report may not infringe privately owned rights; or

B. Assumes any liabilities with respect to the use of, or for damages resulting from the use of any information, apparatus, method, or process disclosed in this report.

As used in the above, "person acting on behalf of the Commission" includes any employee or contractor of the Commission, or employee of such contractor, to the extent that such employee or contractor of the Commission, or employee of such contractor prepares, disseminates, or provides access to, any information pursuant to his employment or contract with the Commission, or his employment with such contractor.

ORNL-2784

Contract No. W-7405-eng-26

CHEMICAL TECHNOLOGY DIVISION

Process Design Section

DESIGN OF CHEMICAL PROCESSING PLANT FOR HOMOGENEOUS REACTOR TEST

A. M. Rom
H. O. Weeren

DATE ISSUED

OCT 7 1959

OAK RIDGE NATIONAL LABORATORY
Oak Ridge, Tennessee
Operated by
UNION CARBIDE CORPORATION
for the
U. S. ATOMIC ENERGY COMMISSION

MARTIN MARIETTA ENERGY SYSTEMS LIBRARIES

3 4456 0351175 0

ABSTRACT

This report describes the design of the plant that was constructed to remove insoluble fission and corrosion products from the circulating fuel solution of the Homogeneous Reactor Test (HRT).

CONTENTS

		Page
1.0	INTRODUCTION	4
2.0	PROCESS AND PLANT DESCRIPTION	7
	2.1 Flowsheet	7
	2.2 Plant Description	7
	2.3 Material Specifications and Assembly	14
3.0	SOLIDS CONCENTRATION AND HIGH PRESSURE SAMPLING SYSTEM	15
	3.1 Hydroclone System	15
	3.2 High-Pressure Sampling System	27
	3.3 Fuel Addition System	37
4.0	DISSOLVER AND LOW-PRESSURE SAMPLING SYSTEM	39
	4.1 Dissolver System	39
	4.2 Dissolver Recombiner System	43
	4.3 Dissolver Addition System, D_2O Storage and Metering System	50
	4.4 Low-Pressure Sampling System	54
5.0	DECAY STORAGE SYSTEM	59
6.0	OFF-GAS SYSTEM	67
7.0	WASTE DISPOSAL SYSTEM	72
8.0	AUXILIARY SERVICES AND EQUIPMENT	76
	8.1 Services	76
	8.2 Instrumentation	81
	8.3 Valves	84
	8.4 Tools	85
9.0	HAZARDS	96
	9.1 Major Disasters	96
	9.2 Lesser Hazards	98
10.0	REFERENCES	102

1.0 INTRODUCTION

This report describes the design of the plant that was constructed to process the HRT (Homogeneous Reactor Test) fuel solution for removal of corrosion and fission products. A 1.5-gpm stream of fuel solution is bypassed around the reactor heat exchanger and is continuously centrifuged to concentrate the insoluble corrosion and fission products, the fuel being returned to the reactor. The HRT, an experimental reactor fueled with an aqueous uranyl sulfate solution that is circulated at high temperatures and pressure, is designed to operate at a maximum power of 10 Mw.

The corrosion and nonvolatile fission products produced in the operation of a homogeneous reactor gradually accumulate in the fuel, and in large reactors would quickly become a significant neutron poison unless removed continuously or at short intervals (Figs. 1 and 2). The required processing rate increases rapidly with increasing power density of the reactor. The only proved method of completely removing these poisons from the fuel solution, solvent extraction, is expensive unless the insoluble products are first concentrated into a relatively small volume. For a power station consisting of three 450-Mw reactors the saving in processing cost as a result of the concentration is estimated to be about $700 per day.[1] For a reactor the size of the HRT little or no fuel processing would be required during the scheduled life of the reactor; a fuel processing plant is not required to reduce neutron poisons. However, since the HRT Chemical Plant was designed for use in obtaining information necessary for the design of fuel processing units for larger reactors, the concentration step was included.

In the HRT gaseous and volatile fission products (xenon, krypton, and iodine) are continuously stripped from the fuel solution as it is let down to the low-pressure system. The nonvolatile fission products and the corrosion products may be classified,[2] according to their chemical behavior at reactor temperature, as (1) only slightly soluble, (2) hydrolyzable to insoluble oxides, (3) soluble, and (4) of uncertain behavior. Most of the worst neutron poisons and most of the corrosion products are in the first two groups and can be readily removed by centrifugation. Of the remaining fission and corrosion products, nickel is probably the worst because of its effect on fuel solution stability as well as its effect as a neutron poison. If the processing rate is high enough to keep its concentration low, the other soluble nuclides will be of little importance.

When the HRT operates at the 5-Mw power level, 5 g of insoluble fission products is produced per day. At the assumed corrosion rates of 10 mpy for the zirconium core tank and 1 mpy for the stainless steel, about 53 g of corrosion products per day is produced. These solids are removed from the fuel solution by deposition on hot surfaces in the reactor system, by agglomeration and settling out in relatively stagnant areas such as the dump tanks, and by the processing plant. The extent to which each mechanism governs the behavior of solid particles in the reactor is not yet known.

As originally conceived, the processing plant would remove the fission product solids from the fuel solution and the D_2O would be recovered in two steps, the solids being first concentrated by evaporation and stored temporarily as a highly concentrated solution and later evaporated to dryness and transported to another facility for uranium recovery by solvent extraction.[3] This design had to be modified when it was discovered that the rate of corrosion in

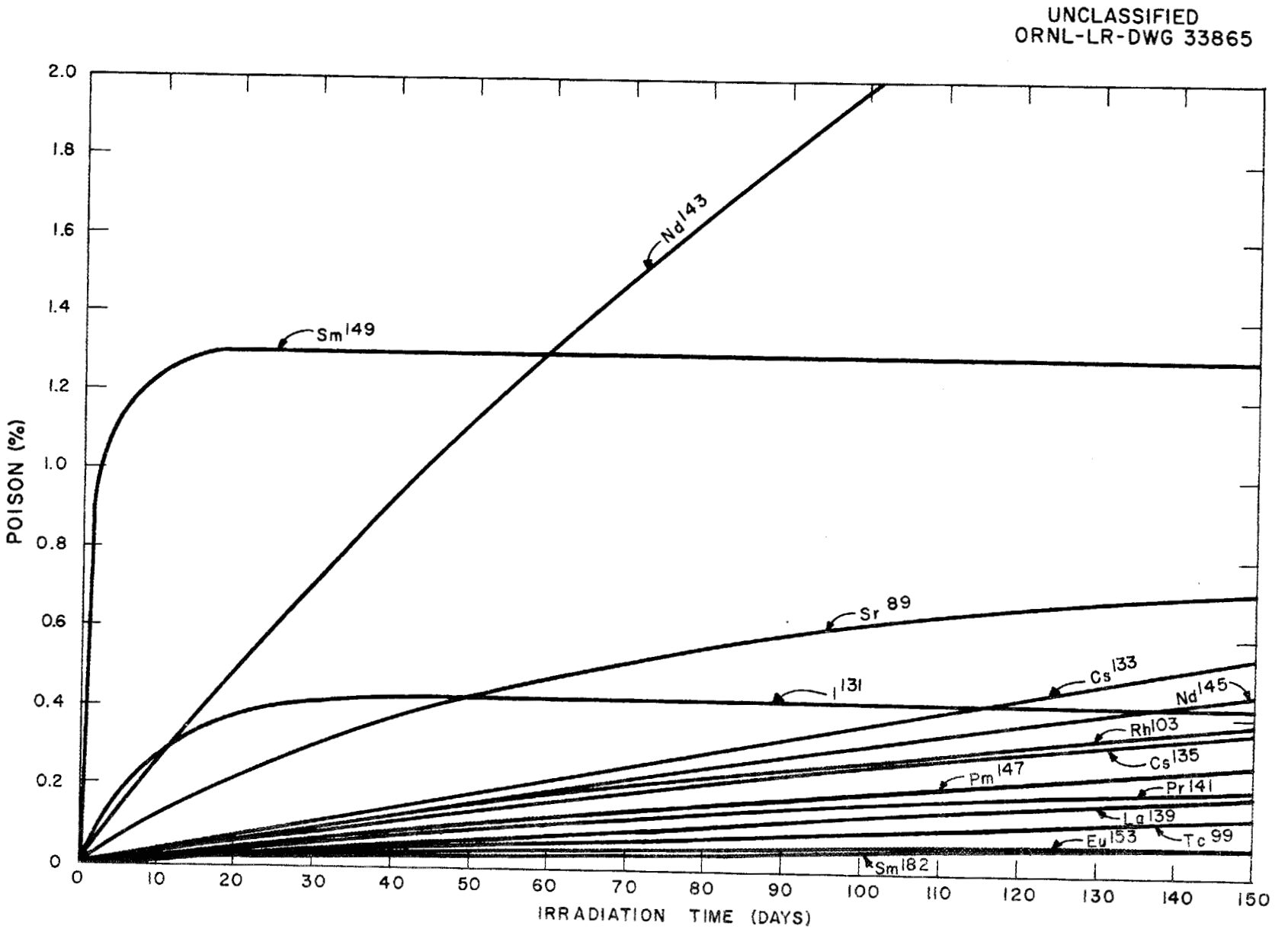

Fig. 1. Calculated Fission Product Poisons in Core of 320-Mw Two-Region Thermal Breeder.

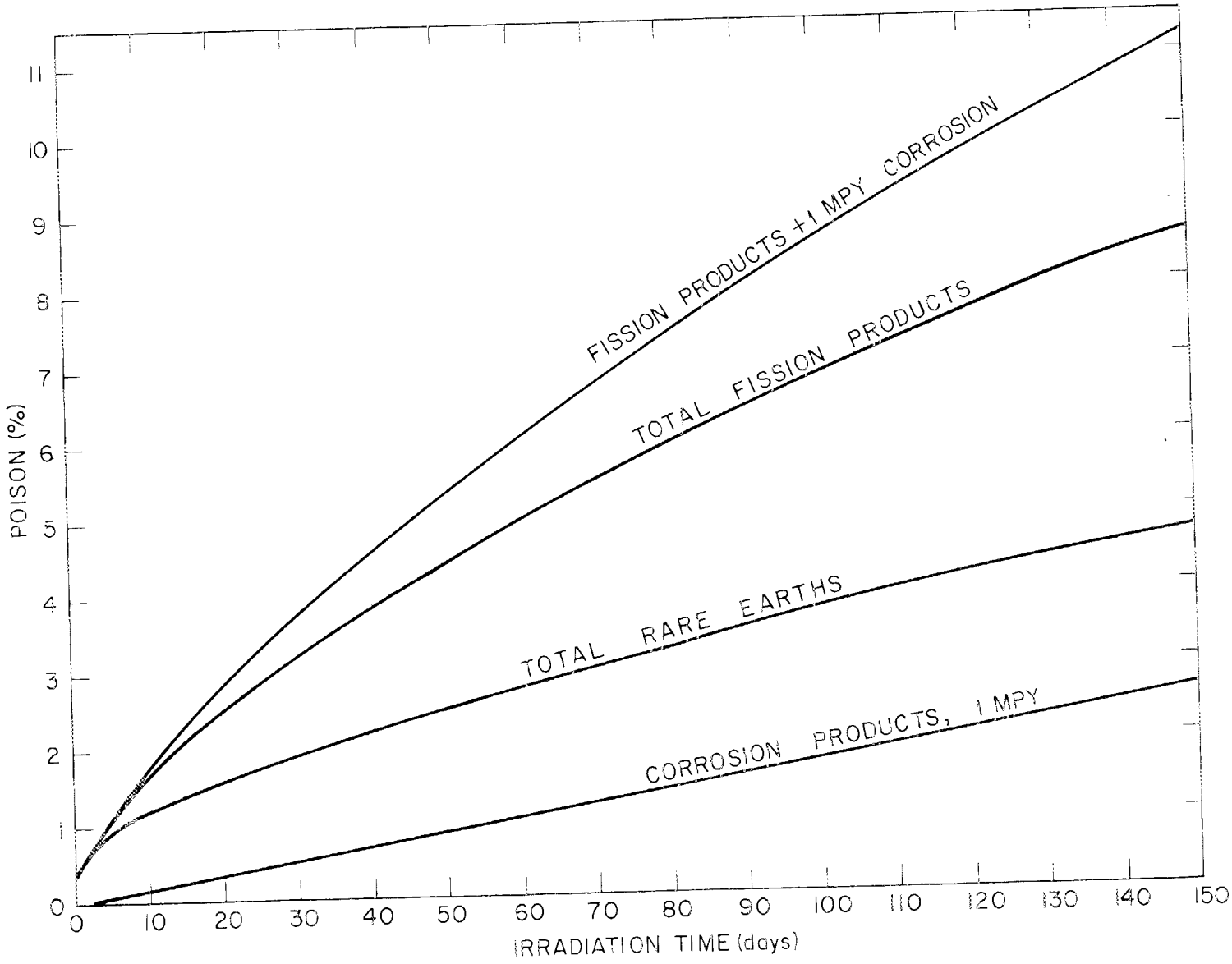

Fig. 2. Calculated Total Poison Effects in Core of a 320-Mw Two-Region Thermal Breeder.

the reactor would be much higher than previously thought and that the mass of corrosion products would be so great that these solids could not be concentrated significantly without making subsequent transfer virtually impossible.[4] In the altered design the solids were dropped directly from the underflow pot into a carrier inside the cell, which could be removed and replaced periodically by opening and flooding the cell. In a later design change this carrier was replaced by a system for dissolving each batch of slurry, sampling the solution, and storing the remaining solution pending transport to another facility for uranium recovery.

2.0 PROCESS AND PLANT DESCRIPTION

2.1 Flowsheet (Reference Dwgs. F-20268 through 70, D-27447 through D-27452)

When the Chemical Processing Plant is in operation, a 1.5-gpm stream is continuously withdrawn from the 400-gpm circulating fuel solution. The solid fission and corrosion products in this by-pass stream are concentrated in a small volume of fuel solution by means of a hydroclone (hydraulic cyclone) (Fig. 3). The bulk of the solution is returned to the reactor. Periodically the system is isolated from the reactor and the accumulated fission and corrosion products are discharged. At this time uranium is added to replace the uranium just removed with the solids and that burned in reactor operation.

The solids concentrate is boiled to recover D_2O for return to the system, and the solids are dissolved in 10.8 M H_2SO_4 to provide a representative sample for analysis.

After the sample has been taken, the rest of the solution is discharged to a tank where it is stored until the radioactivity has decayed sufficiently so that subsequent handling will be relatively easy. The aged solution is transferred to a carrier outside the cell and transported to a solvent extraction facility for recovery of the uranium.

2.2 Plant Description (Reference Dwgs. D-KS-L7753A, D-KS-L7753J, D-KS-L7753L, D-KS-19165A and B)

The processing plant for the HRT is in an area adjacent to and south of the reactor area (Fig. 4). There are two processing cells, each 12 x 24 x 20 ft deep. They are separated from each other and from the reactor cell by concrete radiation shields. There is an access cell 12 x 27 x 20 ft deep and an instrument cell 40 x 9 x 9 ft deep. The processing and access cells are entirely below grade; access to the processing cells is from the top only, since the plant was designed for underwater maintenance. A view of the processing plant operating area is shown in Fig. 5 and a model of the cell equipment in Fig. 6.

The walls of the processing cells are made of barytes concrete (Fig. 7) except where the walls are backed with earth fill; here ordinary concrete is used. The wall between the reactor and the processing cells contains colemenite, a neutron shield. All walls are lined with a 3/4-in.-thick steel plate, which is clad with 304 stainless steel on the bottom of the cell and for 4 ft up the sides. The rest of the plate is painted with multiple coats of Amercoat. The cell is covered with two layers of 2-ft-thick barytes plugs (Fig. 8) and is

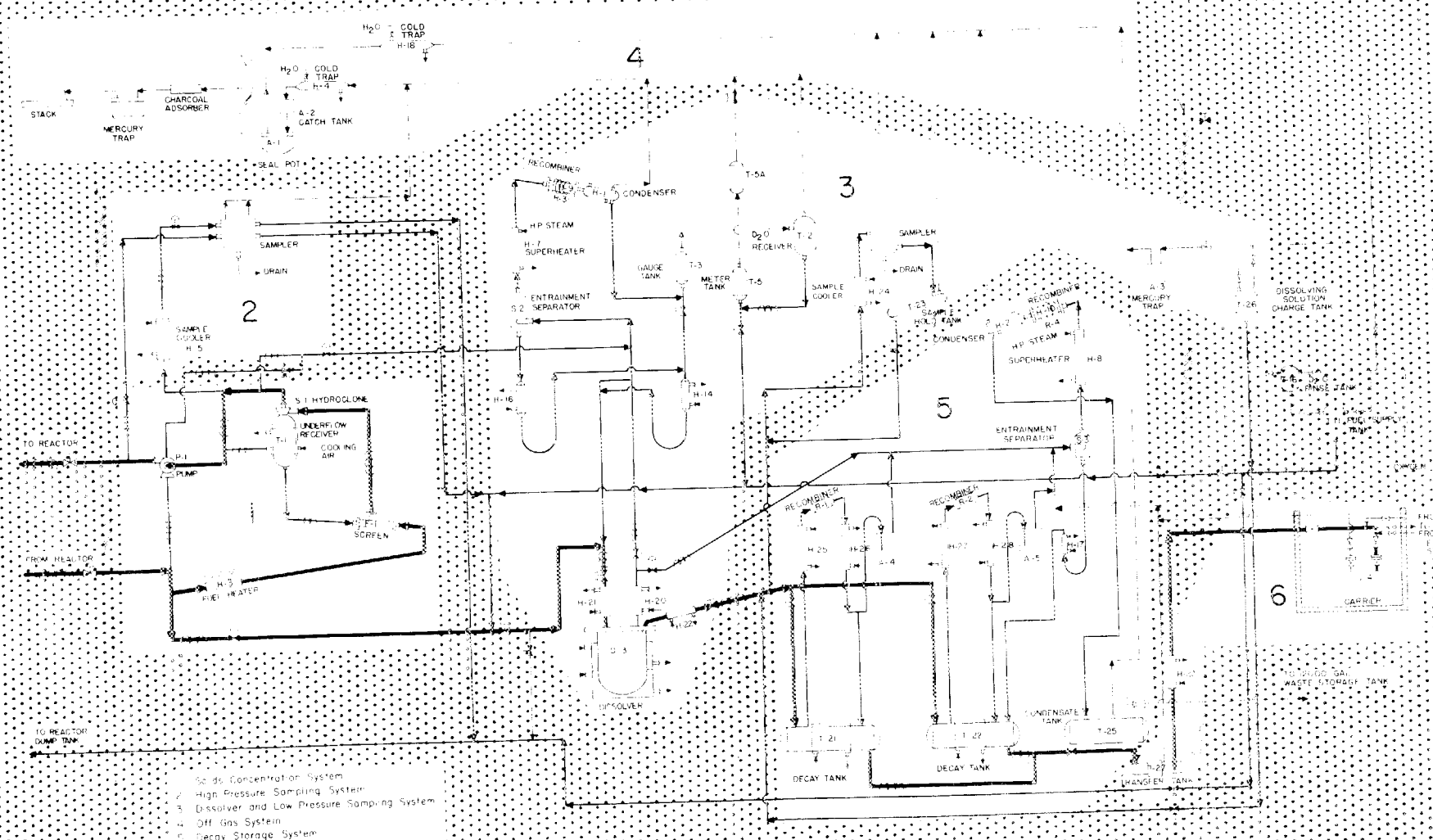

FIG. 7. HRT CPP Schematic Flowsheet

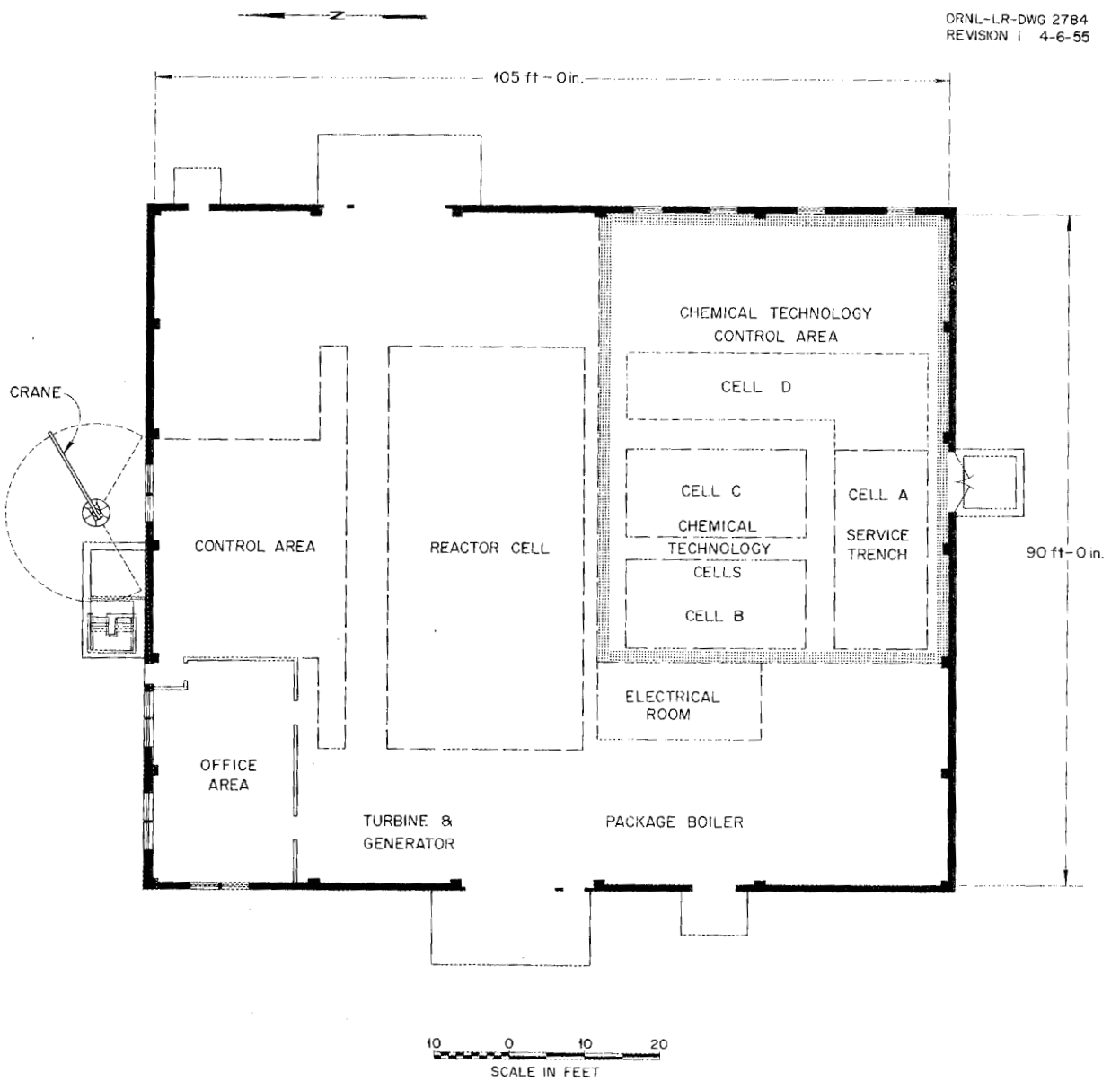

Fig. 4. Ground Floor Plan, HRT Chemical Processing Plant.

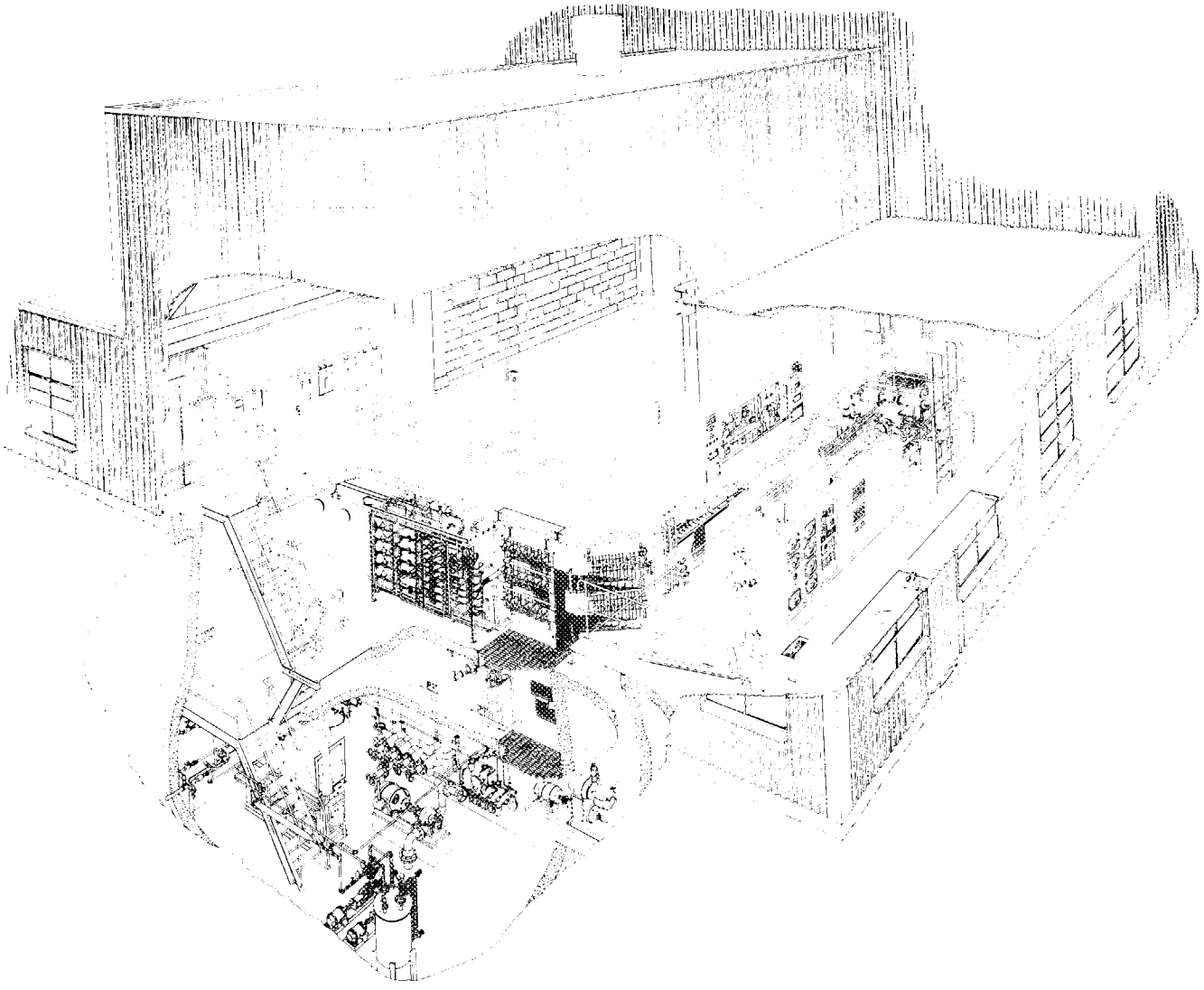

Fig. 5. Homogeneous Reactor Test Chemical Processing Plant Operating Area.

UNCLASSIFIED
PHOTO 40355

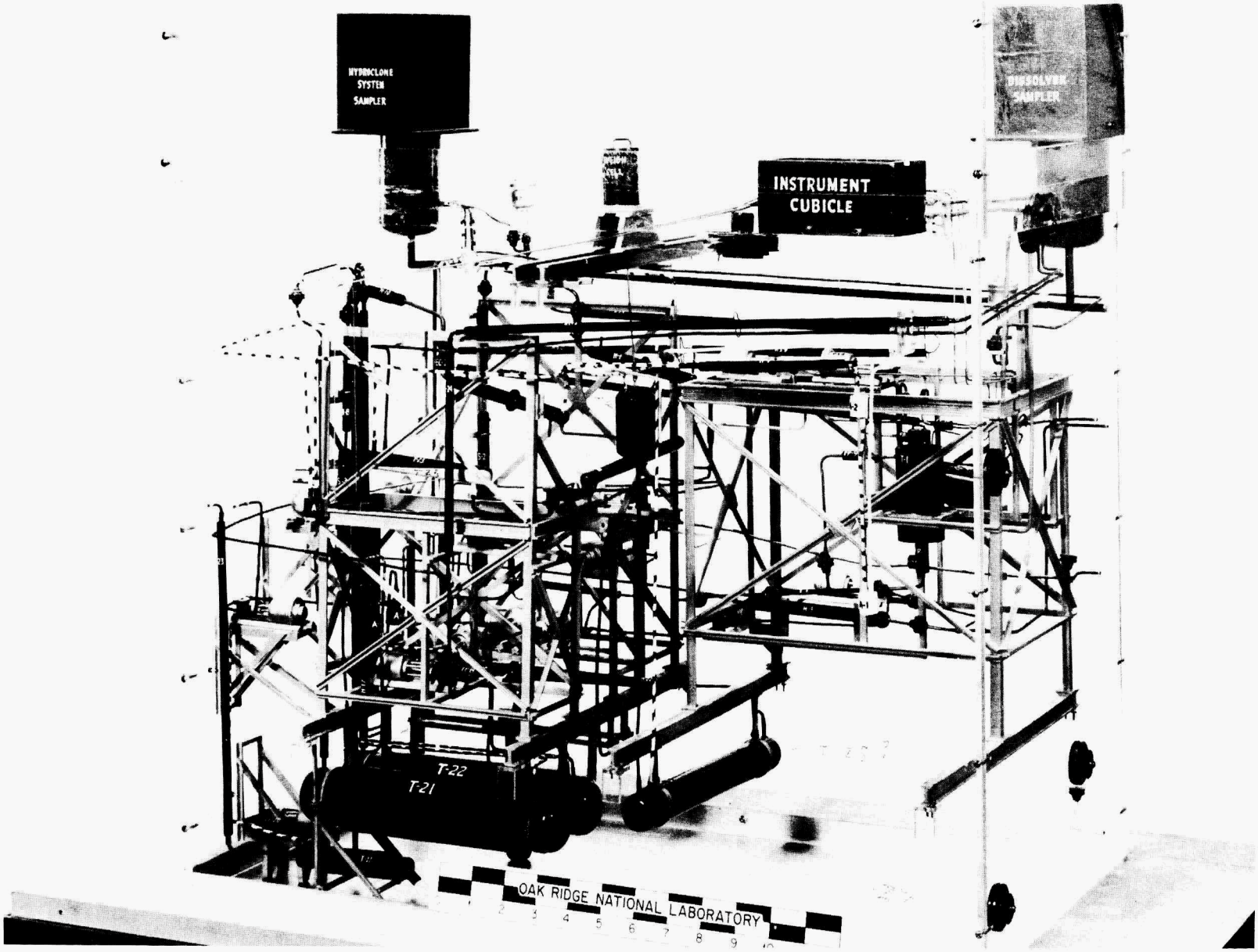

Fig. 6. Layout of HRT-CPP.

UNCLASSIFIED
ORNL-LR-DWG 34605

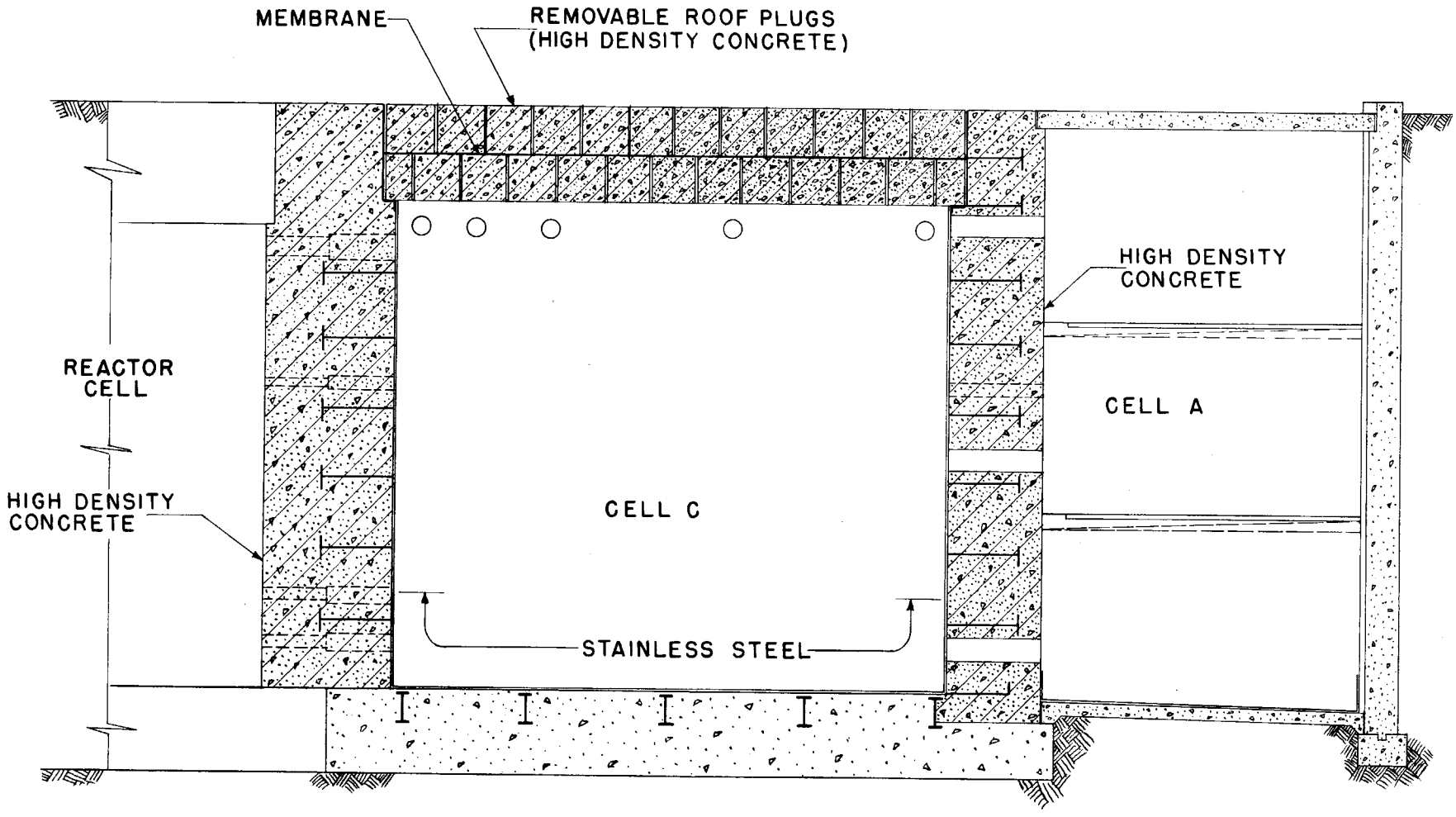

Fig.7. Cross-section of HRT Chemical Processing Cell.

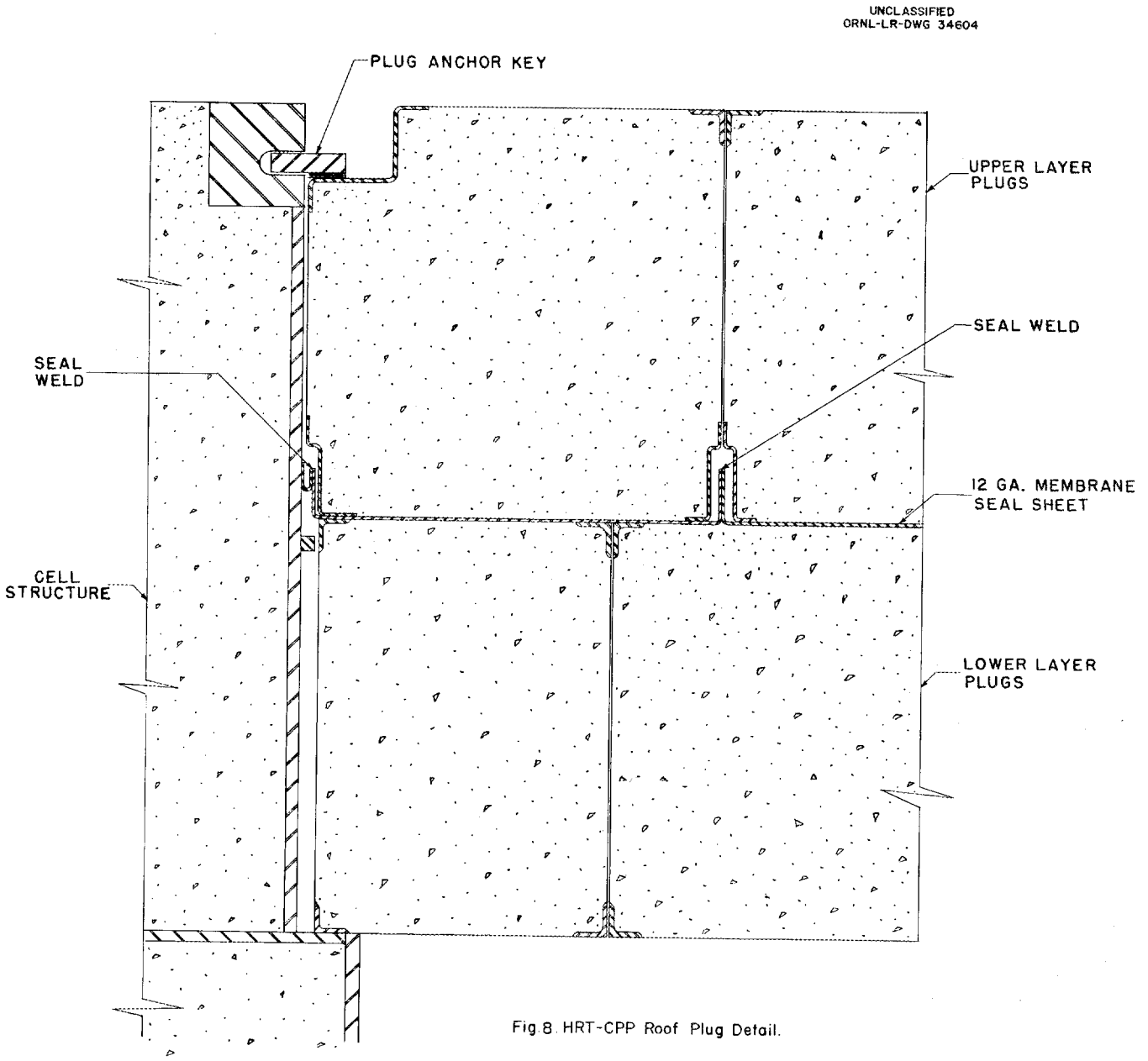

Fig. 8. HRT-CPP Roof Plug Detail.

sealed with a thin steel membrane that lies between the layers of plugs and is welded to the tank liner at the periphery. Some process piping is cast in the concrete walls. Access sleeves 12 in. in diameter contain the service piping and the remaining process piping.

The processing cells, sealed to prevent escape of radioactive solution or vapor in the event of a spill, are designed for a maximum internal pressure of 50 psig but will normally be operated at 7.5 psia. A vacuum pump pumps down and holds the cells at the desired operating pressure. A second pump is also available for this service if maintenance on the first pump should be necessary. The maximum leakage rate of air into or out of the cell has been set at 20 liters/min.

2.3 Material Specifications and Assembly

Cells and Buildings. Material specifications for the cells and building addition were according to Job Specification JS-1316, "Specifications for the Construction of the Addition to Building No. 7500 and the Chemical Technology Cells, HRT Project."

Equipment. Austenitic stainless steel is the principal material used in the construction of the process equipment. Refrigeration lines are of copper both inside and outside the cell. Water, steam, and air lines outside the cell are generally of carbon steel. For equipment that would come in contact with a process solution HRT specifications were followed. ASTM specifications were allowed where a process solution would not contact the equipment. The specifications used most frequently were:

HRP-200:	modified 347 austenitic stainless steel
HRP-201a:	oval and octagonal ring joint gaskets
HRP-202A:	modified 347 austenitic stainless steel flanges
HRP-203:	modified 347 austenitic stainless steel leak detector tubing
HRP-250:	titanium ingot
HRP-251T:	titanium plate, sheet, and strip
HRP-252T:	titanium bar, rod, and wire
HRP-253T:	seamless titanium tube and pipe
HRP-302:	1/2-in. low-pressure bellows-sealed control valve
HRP-303:	high-pressure bellows-sealed control valve
HRT-CP-2:	titanium plate, sheet, strip, bar, rod, wire, and tubular products
HRT-CP-4*:	wrought 20-29 CuMoNb austenitic steel
HRT-CP-1:	HRT-CP pump P-1

A more complete listing may be obtained from CF-57-1-136, HRP and HRT Specification List, January 24, 1957.

Assembly. Since the processing plant was designed for underwater maintenance, equipment that was most likely to require replacement was installed with ring joint flanges. Equipment unlikely to need replacement was welded in place. A drawing (D-20250) was made which standardized the most frequently used welded joints and reference to this drawing was made whenever possible.

---

*Owing to difficulty in obtaining material (Carpenter 20 stainless steel) that would meet this specification, HRT-CP-4 was customarily waived and the material procured according to provisions of the ASME Code Case 1188 (Special Ruling) Special Steel; Use of Plates, Pipe, Tubes, and Forgings in Welded Construction re Sec. VIII.

In cases where a process solution would come in contact with the welded joint, HRP welding specifications were used; these specifications, designed to produce the highest quality weld practicable, were:

HRP-1:	welding procedures for welding chromium-nickel stainless steel pipe, plate, tubing, and general shapes (internal use)
HRP-2a:	inert-gas shielded-arc welding of chromium-nickel stainless steels (internal use)
HRP-3a:	metallic arc welding of chromium-nickel stainless steels (internal use)
HRP-4a:	special welding procedures and welding inspection of 347 stainless steel (external use)

3.0 SOLIDS CONCENTRATION AND HIGH PRESSURE SAMPLING SYSTEM

3.1 Hydroclone System (Reference Dwg. D-27451)

The solids concentration system consists of a heater, screen, hydroclone, underflow pot, and pump and a supplementary system for charging fresh uranium solution to the batch of fuel returning to the reactor to replace that burned in the reactor and removed with the solids. It is the only part of the Chemical Processing Plant that is operated at reactor temperature and pressure, 518°F, 1700 psia. Fuel solution is withdrawn from the main circulating loop of the reactor just downstream from the gas separator, passes through the solids concentration system, and is returned to the reactor at a point downstream from the main heat exchanger. Return of the solution at this point makes the pressure drop through the heat exchanger, which is 40% of the pressure drop in the reactor system, available to help drive the solution through the hydroclone, thereby decreasing the load on the pump.

Heater H-3 (Reference Dwg. D-20236). Fuel entering the Chemical Processing Plant from the reactor loop passes through a heater (Fig. 9). The heater will be operated at a temperature a few degrees above that of the fuel solution flowing through it, but must be kept well below 626°F. Around this temperature the fuel solution forms two liquid phases, the exact temperature depending on the solution concentration (Fig. 10). The heavier phase is much smaller in volume but contains the bulk of the uranium and would be concentrated in the hydroclone underflow pot, removing a significant part of the uranium inventory of the reactor. The solids that accumulate on the walls of the heater during the run will be washed off or redissolved at the end of the run by back washing the heater with cold fuel solution. The possibility that the amount of solids removed from the circulating fuel can be increased by deposition on a hot surface will be determined.

The heater is a 4-ft section of 1/2-in. Sch. 80 pipe, 50 in. long, jacketed with four Calrod heaters cast in an aluminum matrix. A thermocouple measures the temperature of the aluminum matrix and cuts off the power to the heaters whenever the matrix temperature exceeds 617°F. The design and operating conditions are:

Four Calrod tubular elements	2000 watts at 230 volts
Heated surface area	0.572 ft^2
Heater volume	276 ml
Operating pressure	2000 psia
Operating temperature	617°F

UNCLASSIFIED
ORNL-LR-DWG 34603

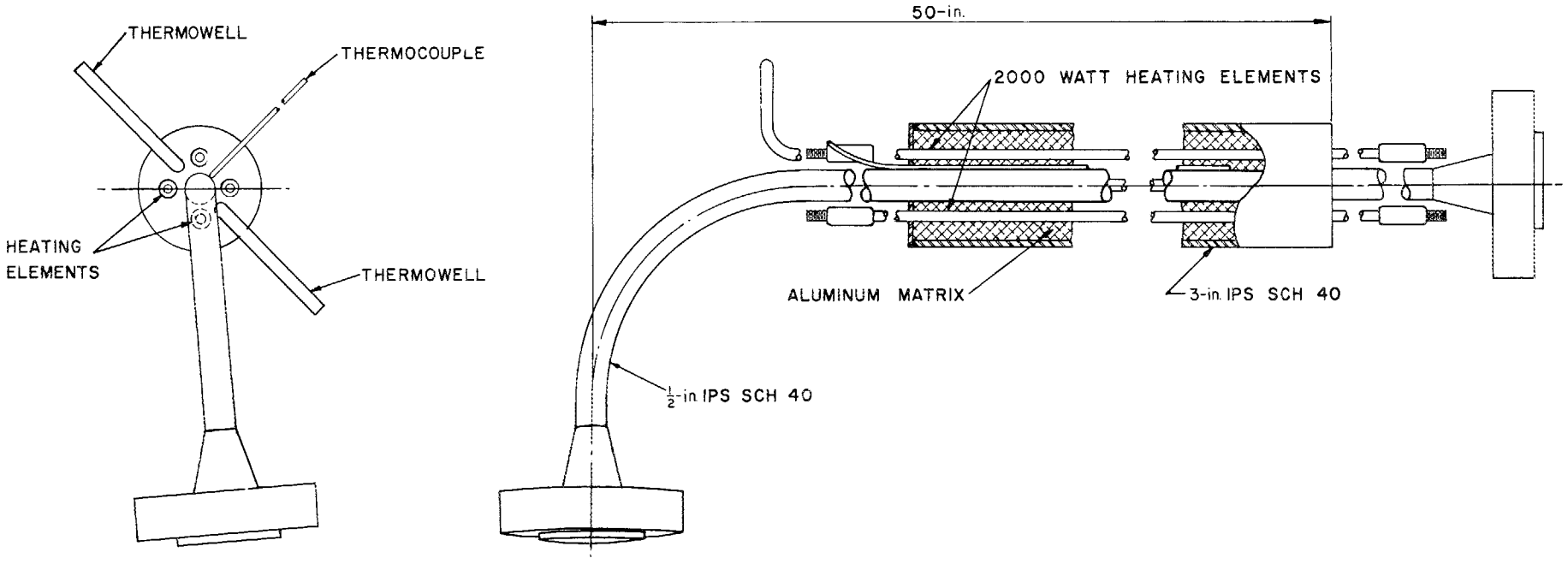

Fig. 9. HRT-CPP Fuel Solution Heater H-3.

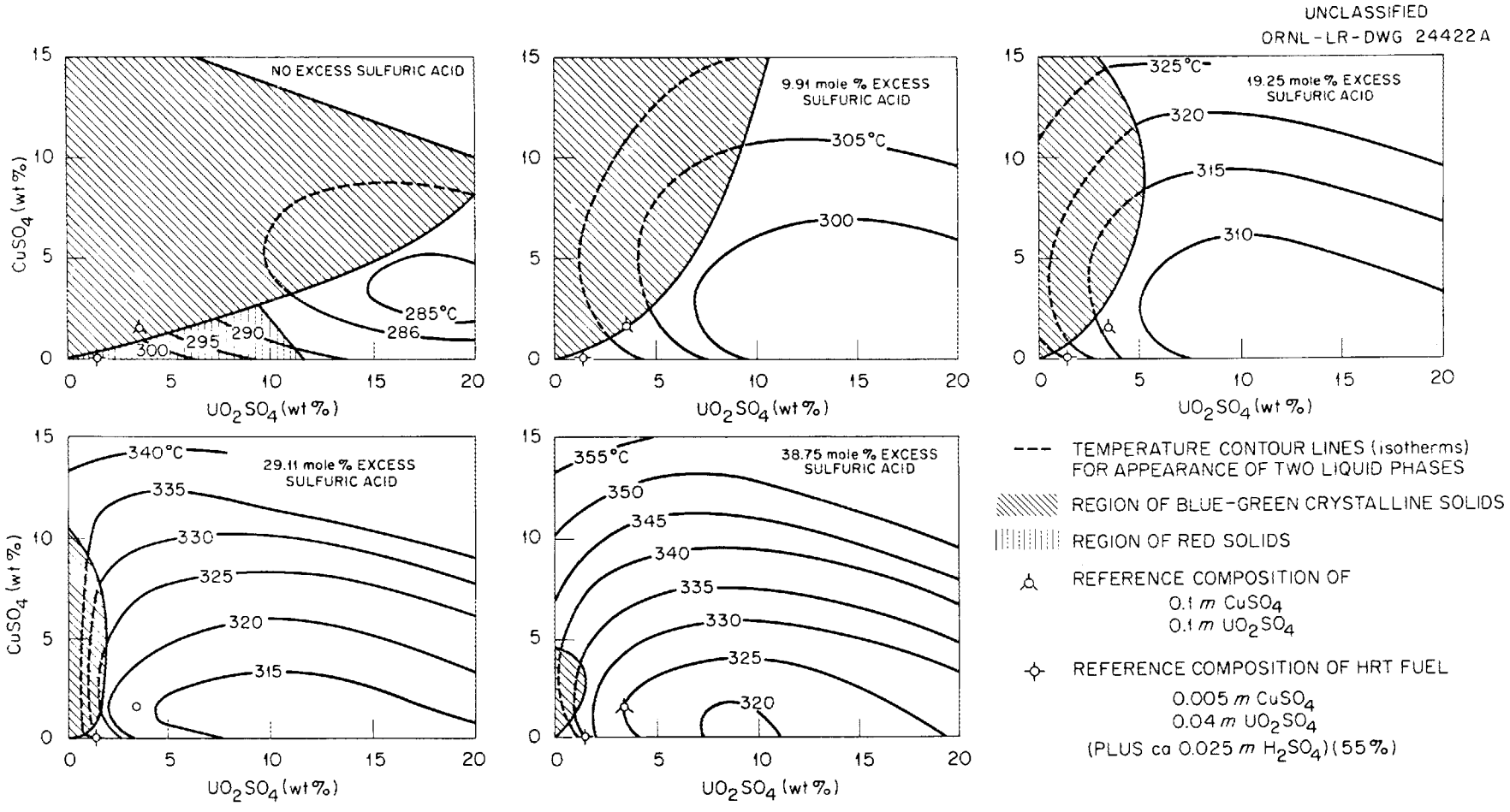

Fig. 10. Fuel Solution Phase Diagram.

Screen F-1 (Reference Dwg. C-20257). The screen (Fig. 11) removes from the fuel solution the fission and corrosion product solids that are large enough to plug the orifices of the hydroclone. This screen is a section of 1/2-in. Sch. 80 pipe containing a 30-in. long inner screen of 1/4-in. titanium tubing with 3/32-in. holes (slightly smaller than the smallest opening in the hydroclone). The particles stay in the filter until flushed out by the discharge of the underflow pot to the low-pressure system. The design and operating conditions are:

Operating pressure	2000 psia
Operating temperature	617°F
Filter hole diameter	3/32 in.
Number of filter holes	946

Hydroclone S-1 (Reference Dwg. D-26412). Fission and corrosion product solids are separated from the fuel solution by a hydraulic cyclone separator, or "hydroclone," to which the solution is fed through a tangential entry. In the strong centrifugal field thereby induced the heavier solid particles are forced to the periphery of the unit and downward into the underflow pot; clear solution from the center of the hydroclone passes to the pump. In a normal hydroclone installation about 10% of the feed stream is discharged with the separated solids; the other 90% goes out the overflow. In the Chemical Processing Plant such a split of the feed stream would result in a 0.15 gpm discharge of fuel solution--too high by a factor of at least 50. This discharge is reduced to 0.002 gpm by using so-called "induced underflow," in which the underflow is discharged into a closed vessel directly below the hydroclone, an equal volume of solution being forced from the vessel back into the hydroclone and out the overflow. The rapid swirling motion of the stream sets up a flow pattern in the underflow pot by which (Fig. 12) the solids and solution are carried toward the walls of the underflow pot and are gradually slowed. The solid particles slowly settle and the solution flows back to the center and is drawn back into the hydroclone.

As the hydroclone is operated the concentration of solids in the underflow pot increases, and eventually the outgoing solids concentration would be equal to the incoming. Long before such a concentration is reached, however, the contents of the underflow pot will be dumped for dissolving and sampling. The dissolver system is designed to operate most effectively with a charge of 400 g of solids and the operating cycle of the hydroclone system is selected so that no more than this amount accumulates in the underflow pot.

The hydroclone used in the processing plant is a hollow truncated titanium cone about 2-1/2 in. long with a maximum bore of 0.56 in. (Fig. 13). The flow rate through the unit, about 1.5 gpm at a pressure drop of 40 psi, is controlled by a unit which keeps the pressure differential between the inlet and outlet of the hydroclone constant at a preset value by increasing or decreasing the frequency of the power supply to the system pump (P-1). A differential pressure gage measures the pressure drop. The design and operating conditions are:

Design pressure	2000 psia
Operating pressure	1660 psia
Operating temperature	564°F
Flow rate	1.5 gpm
Pressure drop	~ 40 psia

UNCLASSIFIED
ORNL-LR-DWG 34602

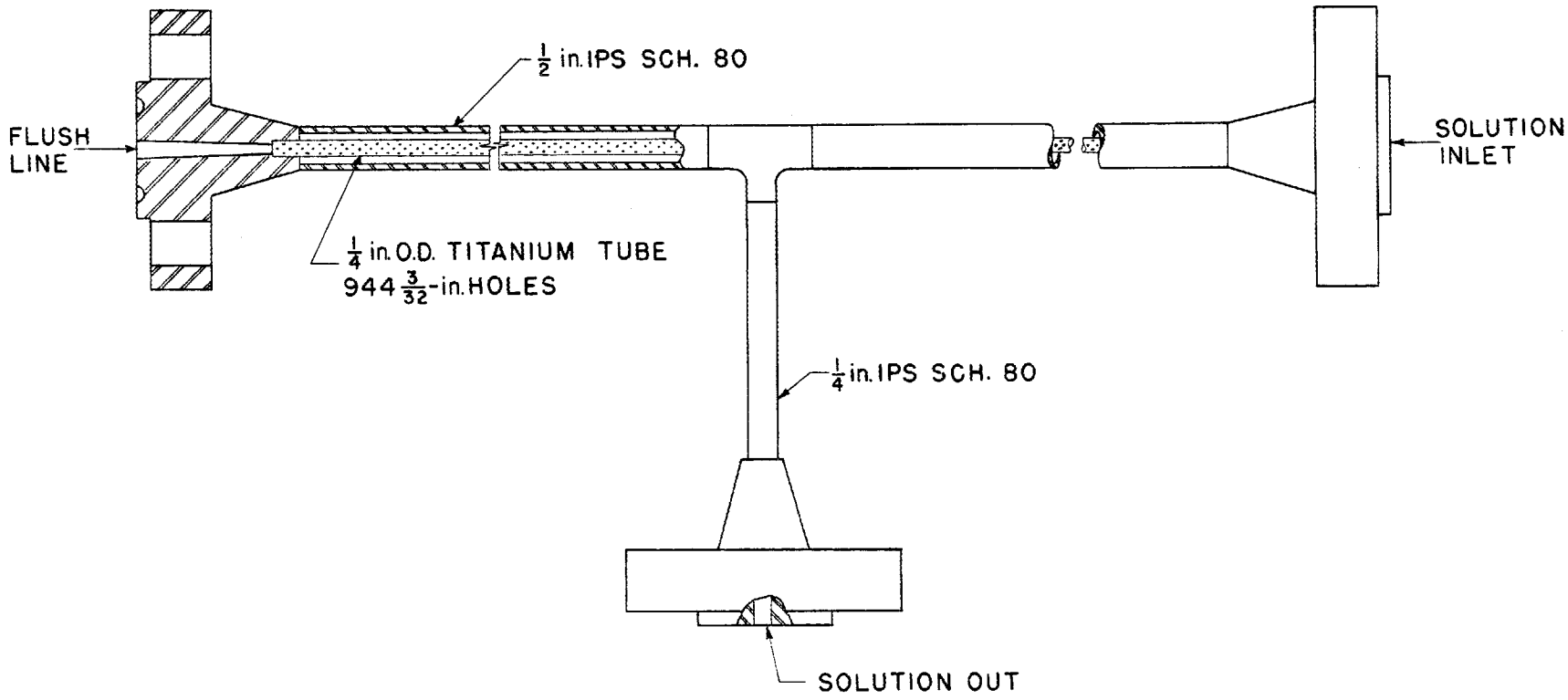

Fig. 11. Screen, F-1, for HRT-CPP Hydroclone Inlet-Port Filter.

UNCLASSIFIED
ORNL-LR-DWG 33880

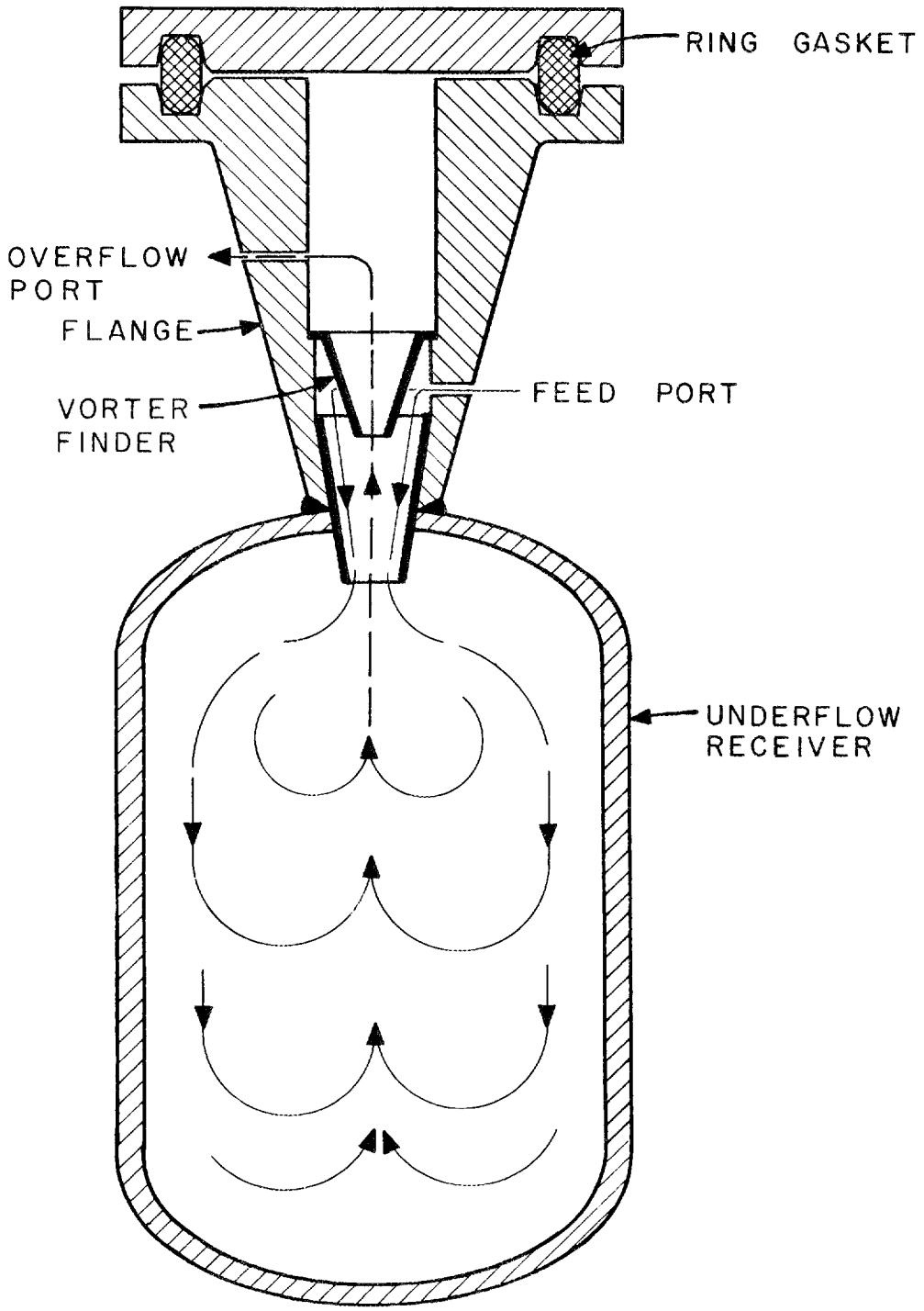

Fig. 12. HRT – CPP Hydroclone and Induced Underflow Receiver — Schematic Representation

UNCLASSIFIED
ORNL-LR-DWG 33866

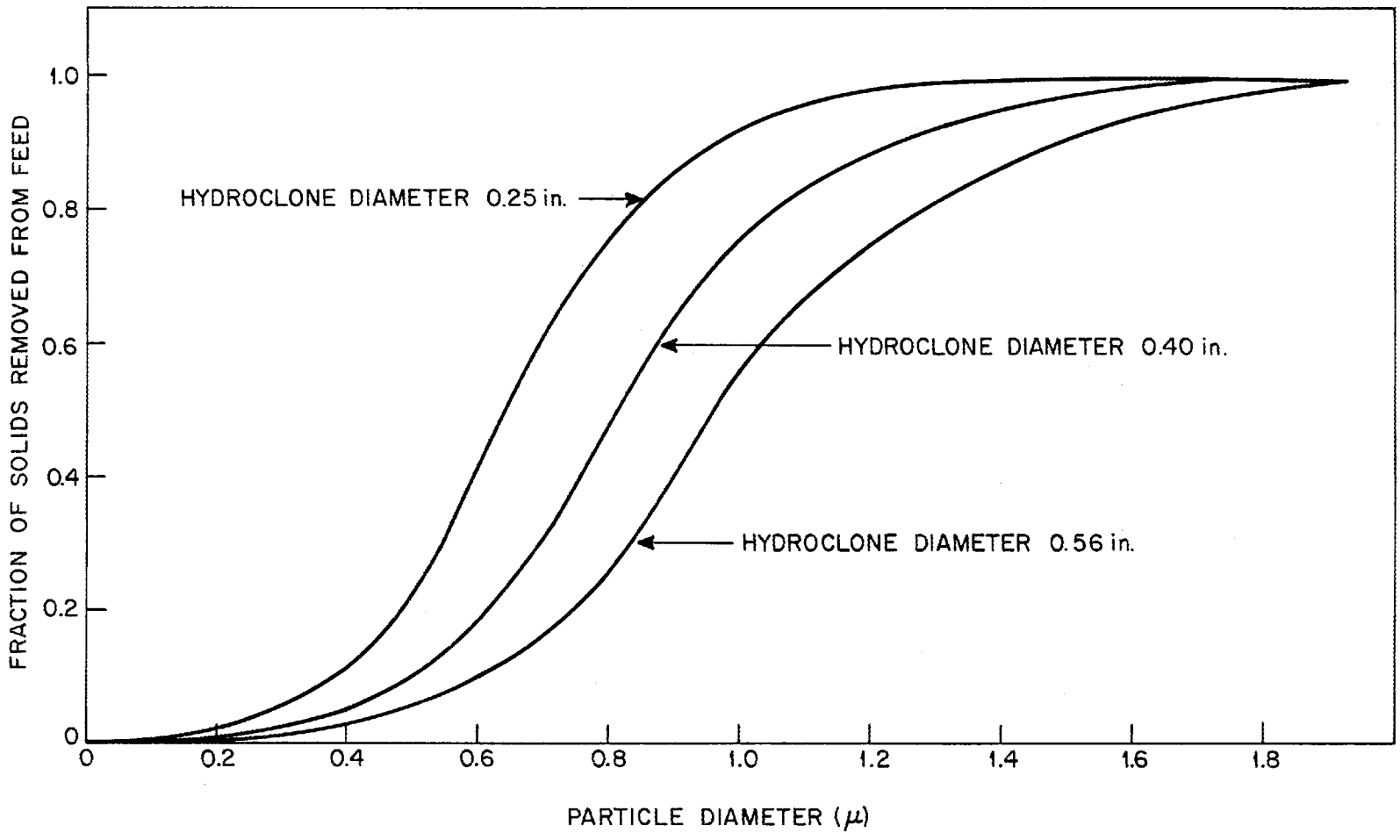

Fig. 13. Predicted HRT-CPP Hydroclone Efficiency vs Particle Diameter. Pressure drop = 80 ft, Data from ORNL 2301.

The predicted efficiency of a hydroclone of this size, based on calculations made by the Unit Operations Section of the Chemical Technology Division, is shown in Fig. 14 for various particle sizes.[6] The hydroclone is installed in a 1-1/2 in. 2500-lb flange that is welded directly to the underflow pot.

Two other hydroclones that have been considered for use in the processing plant have maximum bores of 0.25 and 0.40 in. Performance curves for all three hydroclones are shown in Figs. 15 and 16.

Underflow Pot T-1 (Reference Dwg. E-25113). The mixture of solids and fuel solution separated by the hydroclone is temporarily stored in the underflow pot. The underflow pot (Fig. 17) is made of 6-in. Sch. 160 347 stainless steel pipe. It is 23 in. long and has a capacity of 2.03 gal. The hydroclone is mounted directly above it and the drain line is at the bottom of the pot. A side outlet is provided for recirculating the underflow pot contents prior to sampling. Two thermowells are provided.

The temperature must be regulated throughout a run. During the run up to 1 kw of the heat generated by the wastes held in the underflow pot must be removed to prevent the solution from overheating; at the end of each run the solution must be cooled to approximately 212°F before the pressure is relieved in order to prevent flashing; and at the beginning of the next run the material being returned to the reactor must be heated to the reactor operating temperature. Temperature is regulated by pumping air past the surface of the underflow pot, the temperature of the air being varied to control the amount of heat removed. The air is pumped from outside the processing cell by one of two blowers (P-12 and P-15), heated by a furnace (H-11), blown past the surface of the underflow pot, and discharged outside the cell. The blowers operate at ambient air temperature and are located outside the cell. Each blower has a capacity of about 50 scfm of air at a discharge pressure of 4 psig. Either will supply all the air needed, the second being provided only to ensure uninterrupted air flow in case of malfunction of the first. Any escape of radioactive solution from the chemical processing cell by a leak from the underflow pot into an air line is prevented by circulating the air through eighteen 3/8-in. tubes spaced in aluminum billets along the side of the pot. Any leak in the underflow pot will thus be into the cell rather than into an air line leading outside the cell. The billets are attached to the underflow pot by a spring-loaded strap.

The circulating air is heated by six 3400-watt combustion furnaces, mounted outside the cell. Each furnace consists of a detachable electric heating element 2 ft long that can be fitted around the pipe that carries the air. A cutoff limits the maximum heater temperature to 1470°F. Four of the furnaces are controlled by a Variac, the output being regulated by the temperature of the underflow pot. The other two furnaces are on at all times that air is being heated. The maximum temperature to which the air is heated is about 700°F; normal operating temperature is about 490°F.

At the end of each processing run the high-pressure system of the processing plant is isolated from the reactor by closing the valves in the lines connecting the plant to the reactor and sealing the lines by freezing plugs. The underflow pot is then cooled to about 212°F and vented to the low-pressure system. During the greater part of this cooling cycle the solution temperature will be too low for the copper-catalyzed recombination of deuterium and oxygen to be effective;

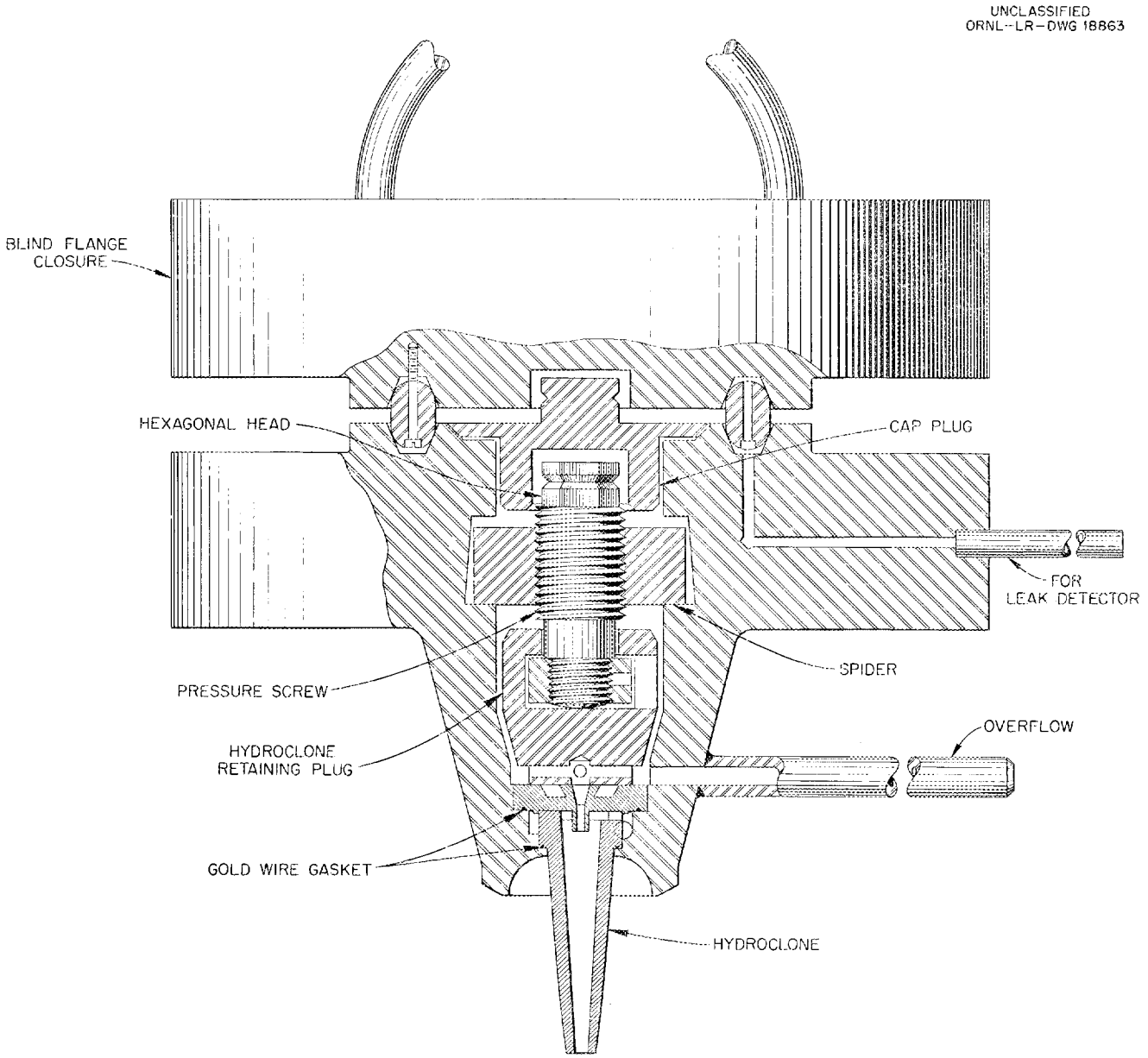

Fig. 14. HRT Hydroclone S-1.

UNCLASSIFIED
ORNL-LR-DWG 33867

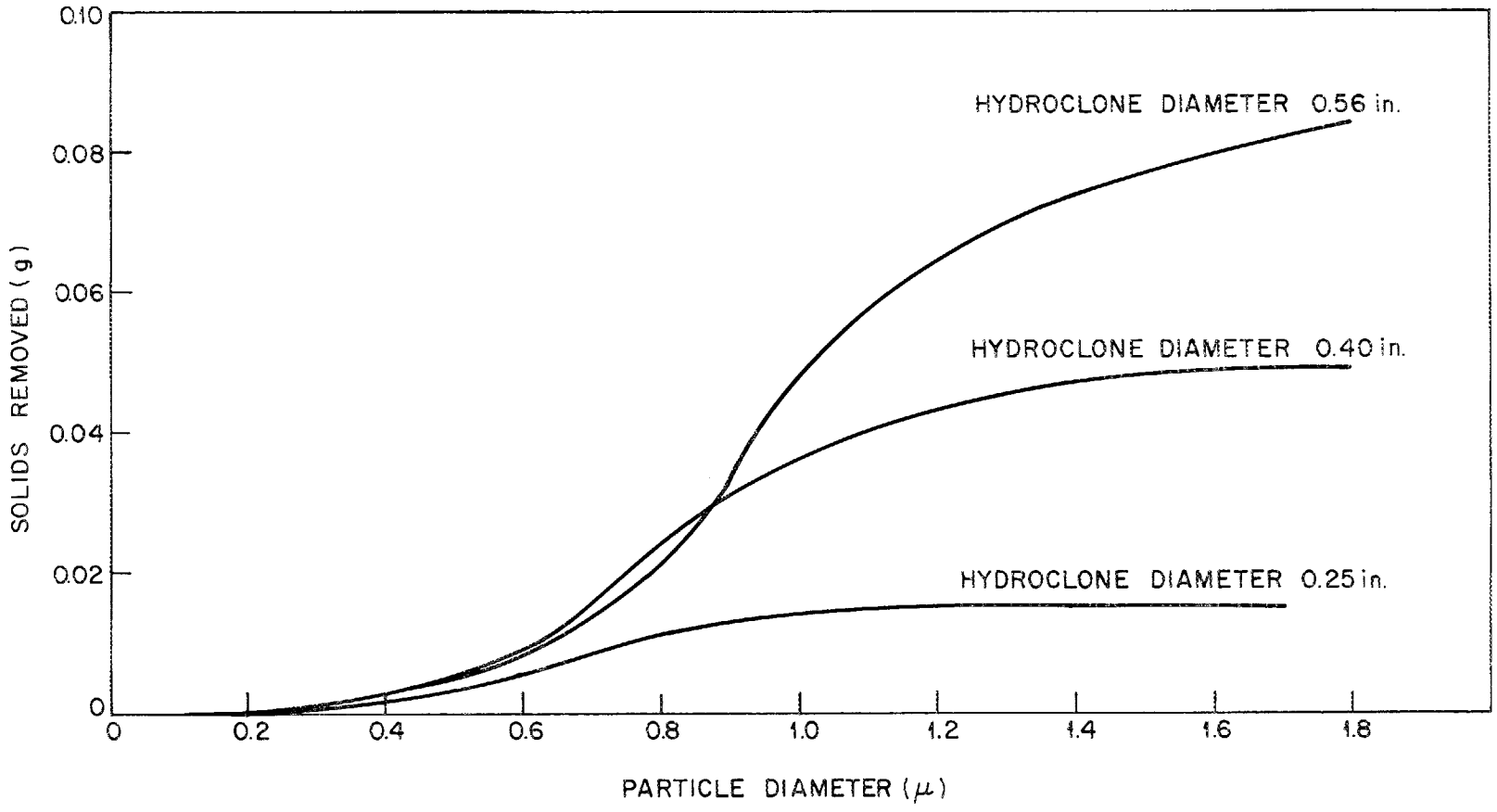

Fig. 15. Calculated Rate of Solids Removal by Hydroclones for Various Particle Diameters. Pressure drop = 80 ft, feed concentration = 20 mg/liter. Data from ORNL 2301.

UNCLASSIFIED
ORNL-LR-DWG 33868

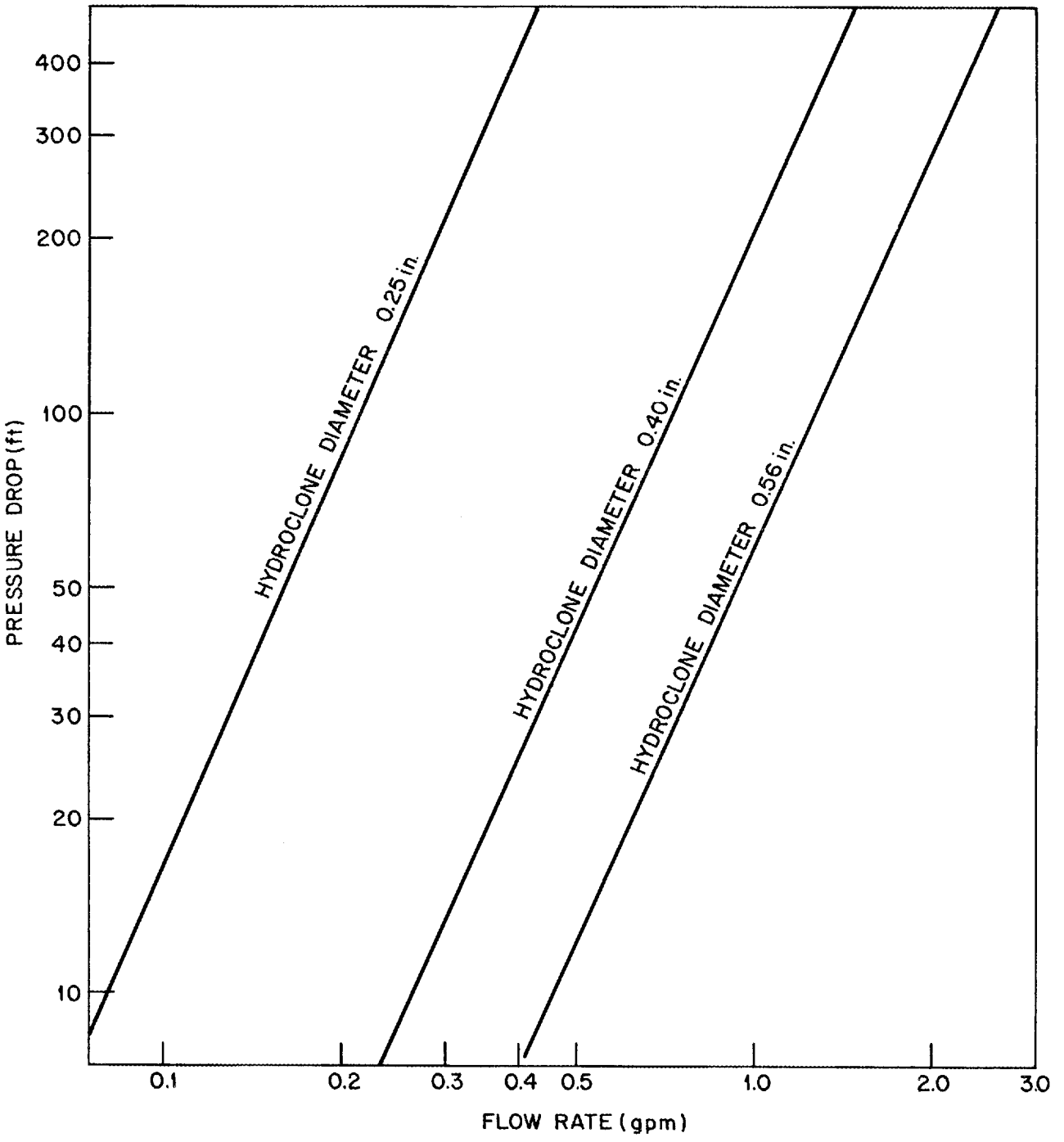

Fig. 16. Hydroclone Pressure Drop vs Flow Rate. Data from ORNL 2301.

UNCLASSIFIED
ORNL-LR-DWG 34601

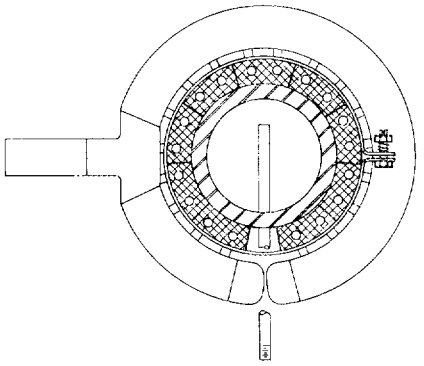

SECTION X-X

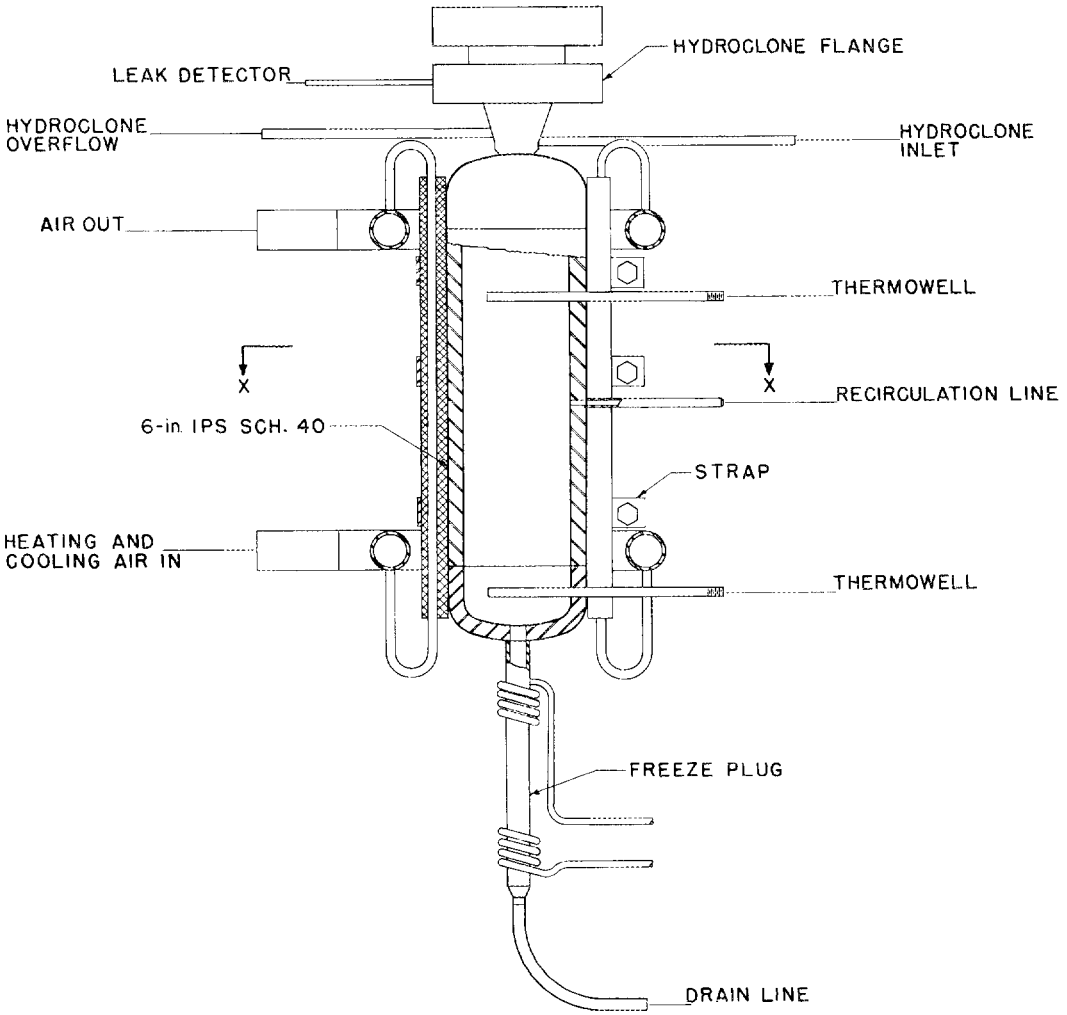

Fig. 17. HRT-CPP Hydroclone Underflow Pot.

most of the gas that is radiolytically produced during this time will collect in the vapor space that is formed as the solution cools. If sufficient gas is allowed to accumulate, accidental ignition could cause an explosion of sufficient violence to rupture the underflow pot. The force of such explosions throughout cooling cycles of 2 and 4 hr has been calculated (Fig. 18);[7] cycles longer than 4 hr will be dangerous.

In a series of runs made by the Unit Operations Section the over-all heat transfer coefficient was found to be 19 Btu/hr·ft^2·$^\circ$F/ft. The estimated solution coefficient was 100, the air coefficient 33, the vessel wall coefficient 180, and the coefficient of the gap between the aluminum billets and the underflow pot 180.[8] The calculated length of the cooling cycle based on an over-all coefficient of 19 Btu/hr·ft^2·$^\circ$F/ft was 3 hr. The fall in underflow pot temperature during a 3-hr cooling cycle is shown in Fig.19 and the rise in temperature of the underflow pot during the heating cycle in Fig. 20.[9]

Pump P-1. The pump (Fig. 21) supplies pressure for efficient operation of the hydroclone. Of the total head of about 40 psi needed, 16 psi is furnished by the pressure drop across the main heat exchanger in the reactor system and 24 psi by the pump. The pump is designed to operate from a variable-frequency power supply of 30 to 80 cps so that its output can be controlled without a valve. Performance curves for three different frequencies are shown in Fig. 22.[10]

The pump bearings must be kept at a temperature of 150°F or below. This is done by cooling the fluid circulating behind the thermal barrier that is in contact with these bearings by means of a 3-gpm flow of water. Two discharge nozzles are provided, one for normal flow and one for recirculation of the underflow pot contents prior to sampling. This second discharge nozzle is normally closed with a freeze plug. Accumulated gases may be discharged when necessary through a vent to the low-pressure system. This line is normally closed. Two microphones are attached to the pump so that evidence of bearing wear can be detected. The design and operating conditions are:

Design pressure	2000 psia
Operating pressure	1684 psia
Operating temperature	564°F
Normal rate	1.5 gpm
Head	100 ft at 60 cps
Current frequency	30-80 cps

3.2 High-pressure Sampling System

Two samples are taken from the high-pressure loop of the processing plant. The sample of the hydroclone overflow is taken while the plant is operating at 1700 psi and 518°F and is removed just downstream from the hydroclone overflow port. A stream of about 0.2 gpm is bled off through a heat exchanger, pressure reducing valve, and sample isolation chamber to a dump tank in the reactor low-pressure system. The stream is allowed to flow until the lines are well flushed, and then 5 ml is trapped in the isolation chamber. The isolation chamber is emptied by remote control into a sample bottle, which is placed in a carrier and transported to the analytical laboratory.

The sample of the underflow pot contents is taken (at 200°F and 17 psia) at the end of a processing run, after the solution has been cooled and vented. Since this sample will have a high concentration of solids, it is necessary to

UNCLASSIFIED
ORNL-LR-DWG 33877

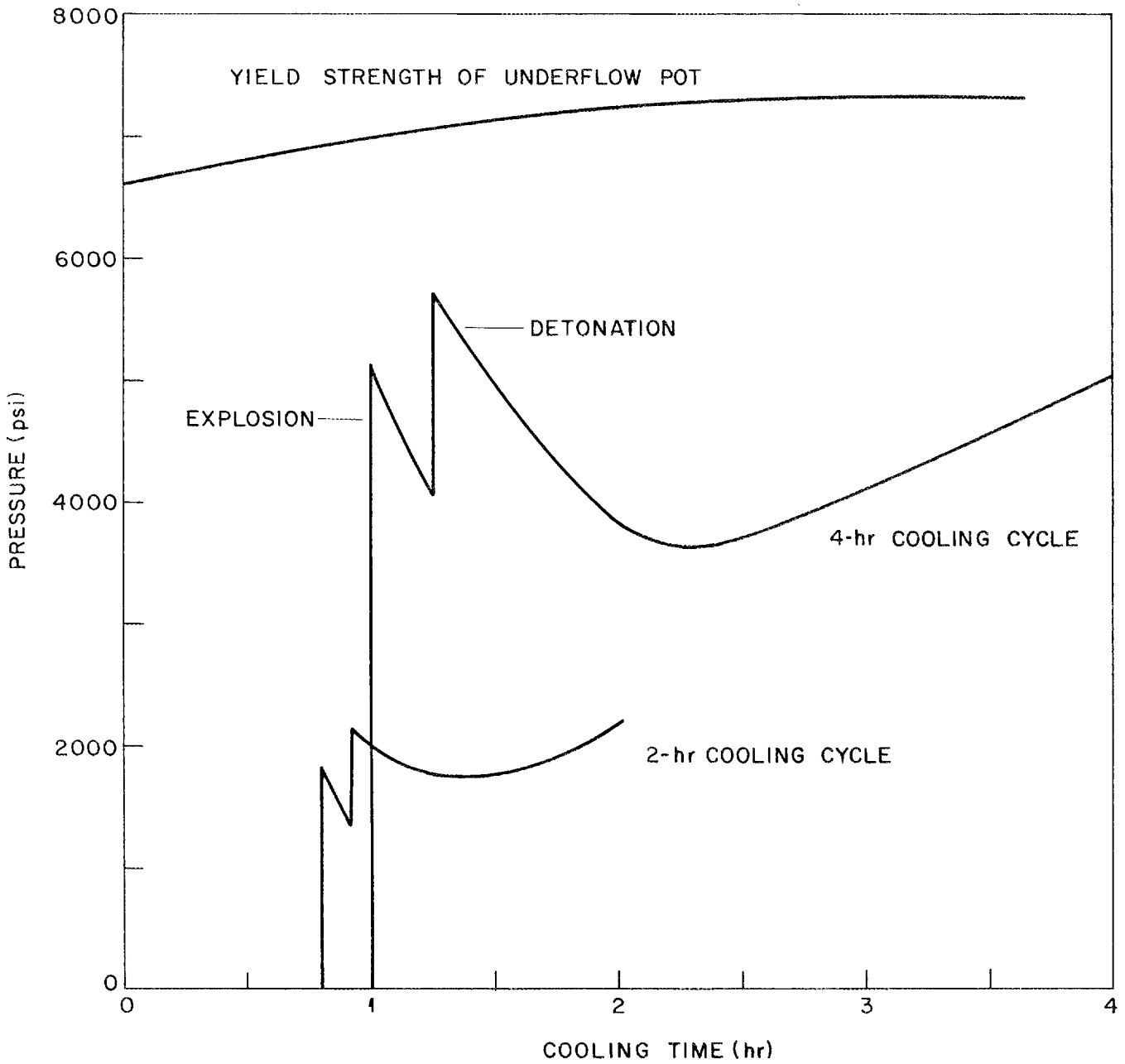

Fig. 18. Maximum Potential Explosive Pressure in the HRT-CPP Hydroclone Underflow Pot During Two Cooling Cycles. Reactor at 5 Mw.

UNCLASSIFIED
ORNL-LR-DWG 33878

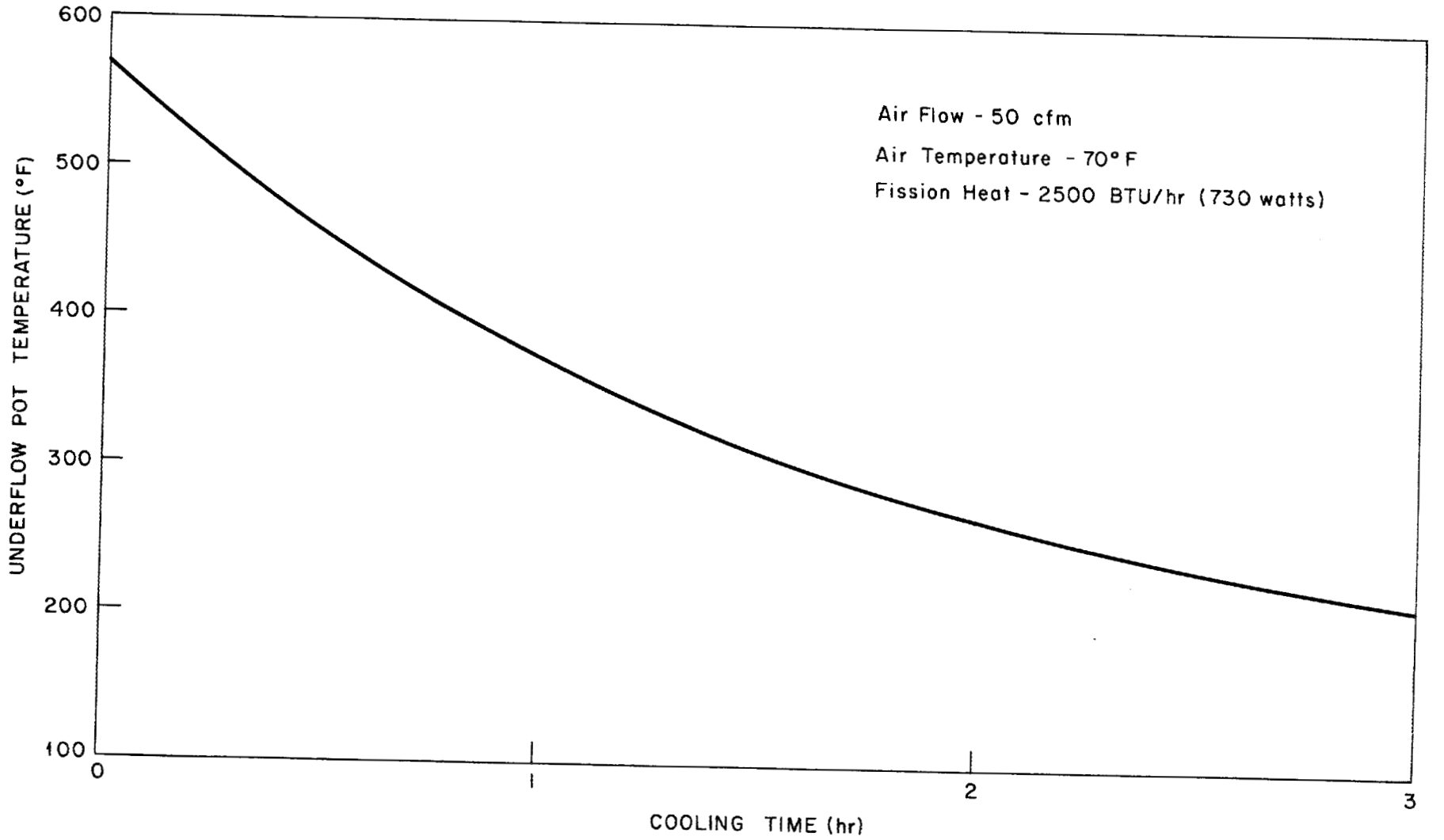

Fig. 19. HRT-CPP Hydroclone Underflow Pot Temperature Through a 3-hr Cooling Cycle.

UNCLASSIFIED
ORNL-LR-DWG 33869

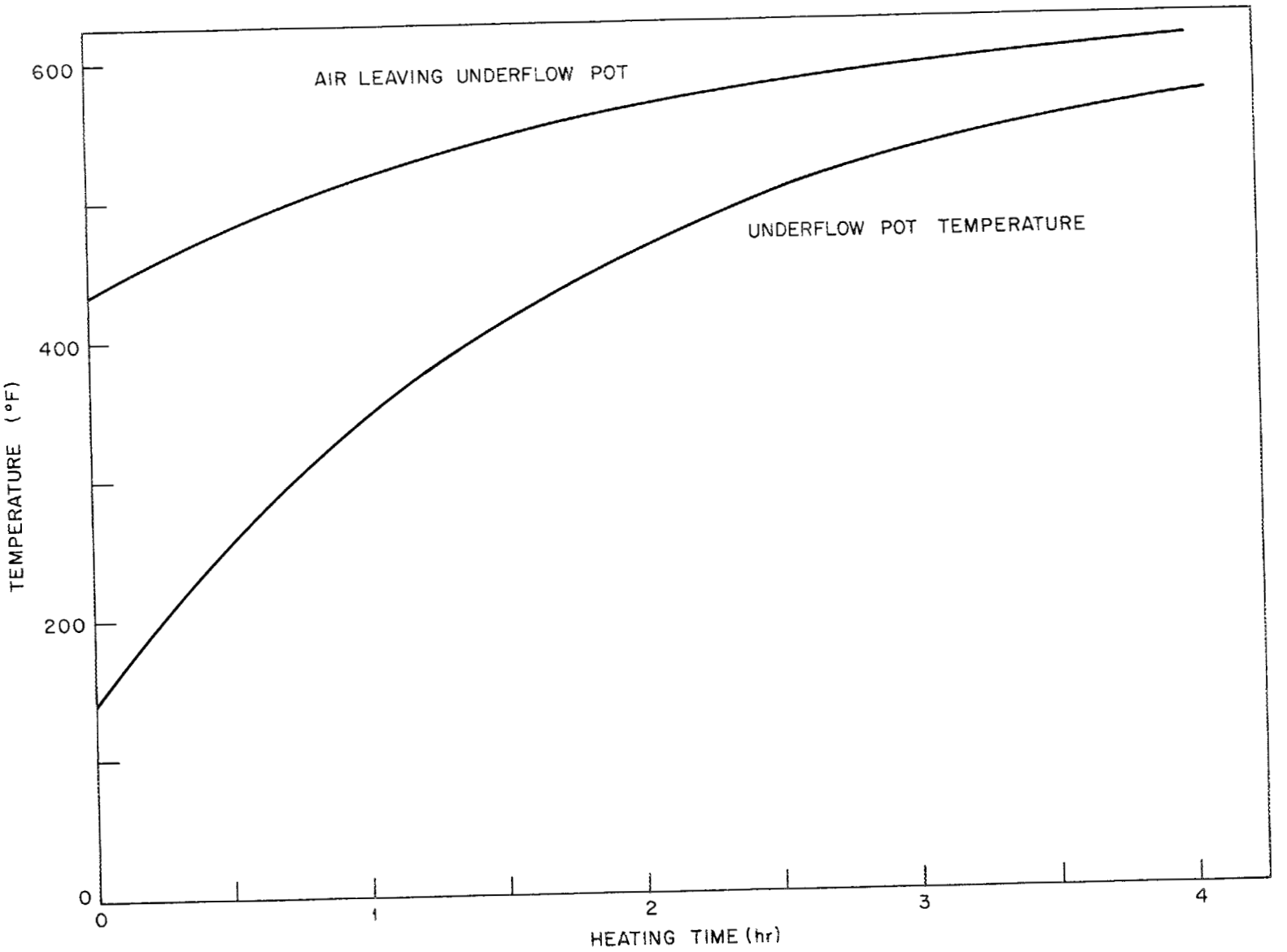

Fig. 20. Temperature of HRT-CPP Underflow Pot System During a 3-hr Heating Cycle Inlet Air at 700° F.

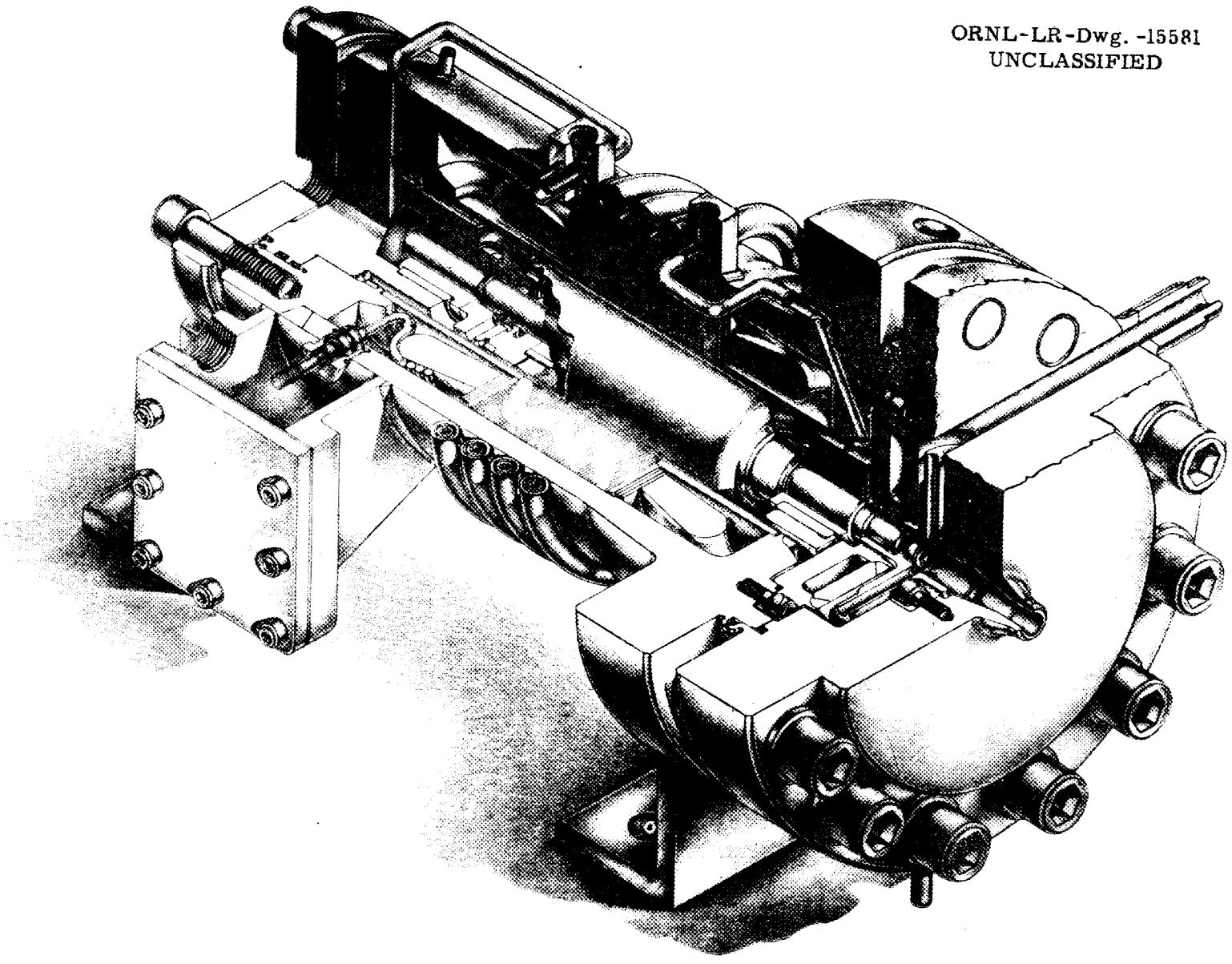

Fig. 21. Westinghouse Canned Rotor Pump.

UNCLASSIFIED
ORNL-LR-DWG 33870

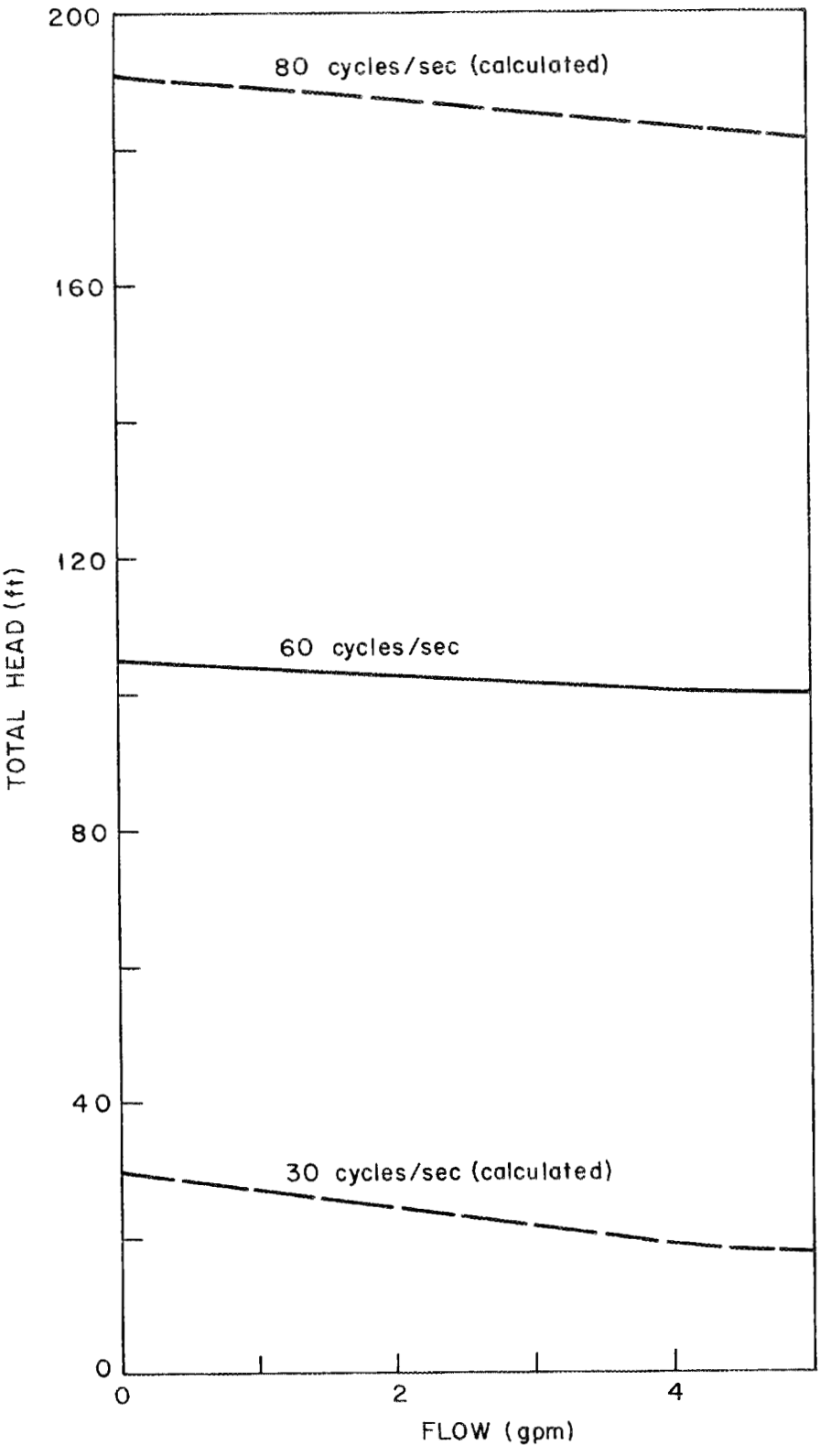

Fig. 22. Performance Curve for Westinghouse Canned Rotor Pump.

circulate the solution for some time to assure reasonable homogeneity of the sample. Pump P-1 is used to circulate the contents of the underflow pot through the sampler at a rate of 3 gpm. A small volume is isolated and removed for analysis in the same way as the high-pressure sample. The underflow pot sample is circulated through the sampler, heater H-3, screen F-1, and underflow pot T-1 by the pump P-1.

Sampler Reference Dwgs. E-15820, D-15821 and 2, C-15823, D-15824 through 7, C-15828 and 9, D-15830 through 6, D-15839 through 45). The sampler (Fig. 23) is in a steel compartment located near the top of the processing cell and sealed off from the cell. There are two sampling mechanisms, one for the hydroclone overflow sample, which is identical with the high-pressure sampling mechanism of the reactor, and one for the underflow-pot sample, which is similar to that of the other samplers but the size of various openings are somewhat larger so that the expected higher solids concentration can be handled. The two isolation chambers are served by a common loading and manipulating device. The solution being sampled is allowed to flow through the sampling station until the volume in the isolation chamber is deemed representative and is then valved off from the flowing stream. An evacuated sample flask in a holder (Fig. 24) is lowered through the loading tube to the transfer mechanism. The flask is positioned and raised mechanically into place so that the transfer needle punctures the rubber diaphragm on the sample flask, and the sample is dropped into the flask by raising the isolation chamber plug. The previous operations are then reversed and the sample flask is withdrawn from the sampler compartment into a sample carrier mounted directly above.

Sample Cooler H-5 (Reference Dwg. D-24151). The 0.2 gpm of fuel solution taken from the overflow is cooled (Fig. 25) so that flashing will not occur in the throttling valve or sampler. Since uranium peroxide might precipitate in the fuel solution at a temperature below 140°F, the entering cooling water is preheated to this temperature with a steam-jet mixer. The underflow sampler is designed to handle solids and requires no such precaution.[11]

The cooler is built in six sections mounted in series, four sections 8 ft long and two 6 ft long. Pertinent data are:

Total surface area	3.5 ft^2
Operating pressure	1700 psi
Operating temperature	527-160°F
Cooling water rate	2-3 gpm

In the first sections of the cooler the process solution temperature is near 527°F and the temperature of the process line is very little lower. Any cooling water in contact with the surface of the tube immediately flashes to vapor and the surface of the tube is essentially insulated with a layer of steam. The heat transfer rate is thus much lower than under more normal conditions; an overall coefficient of 40 Btu/hr·ft^2·°F has been calculated. This compares with a calculated coefficient of 200 Btu/hr·ft^2·°F in the cooler sections of the exchanger.

The cooling-water lines are a possible path for escape from the cell of the highly radioactive fuel solution under a reactor pressure of 1700 psi. Therefore, instead of conventional construction, the cooling water flows through a coil wrapped around the process pipe so that any leak in the process pipe will be into the cell rather than into a cooling water line. Good heat transfer is obtained by casting the whole assembly in aluminum.

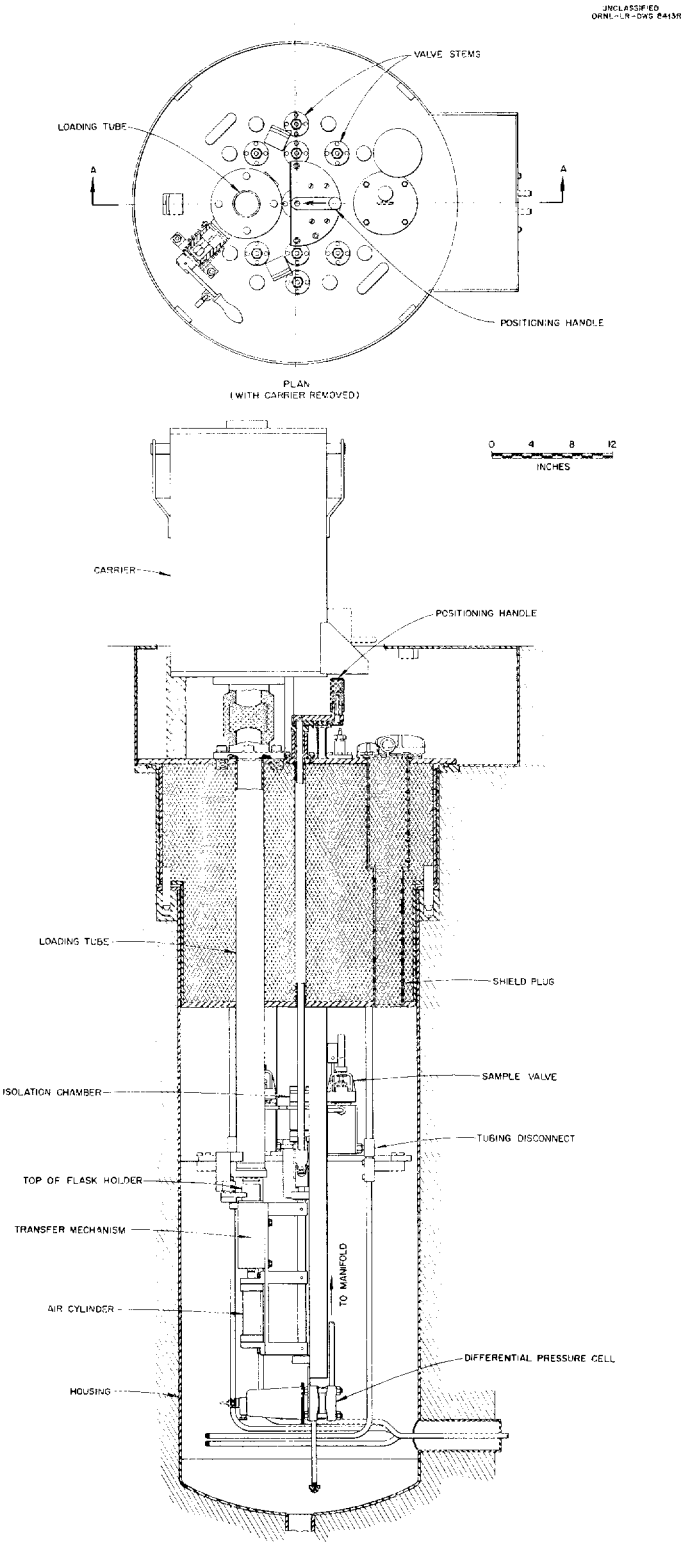

Fig. 23. HRT-CPP Sampler Assembly.

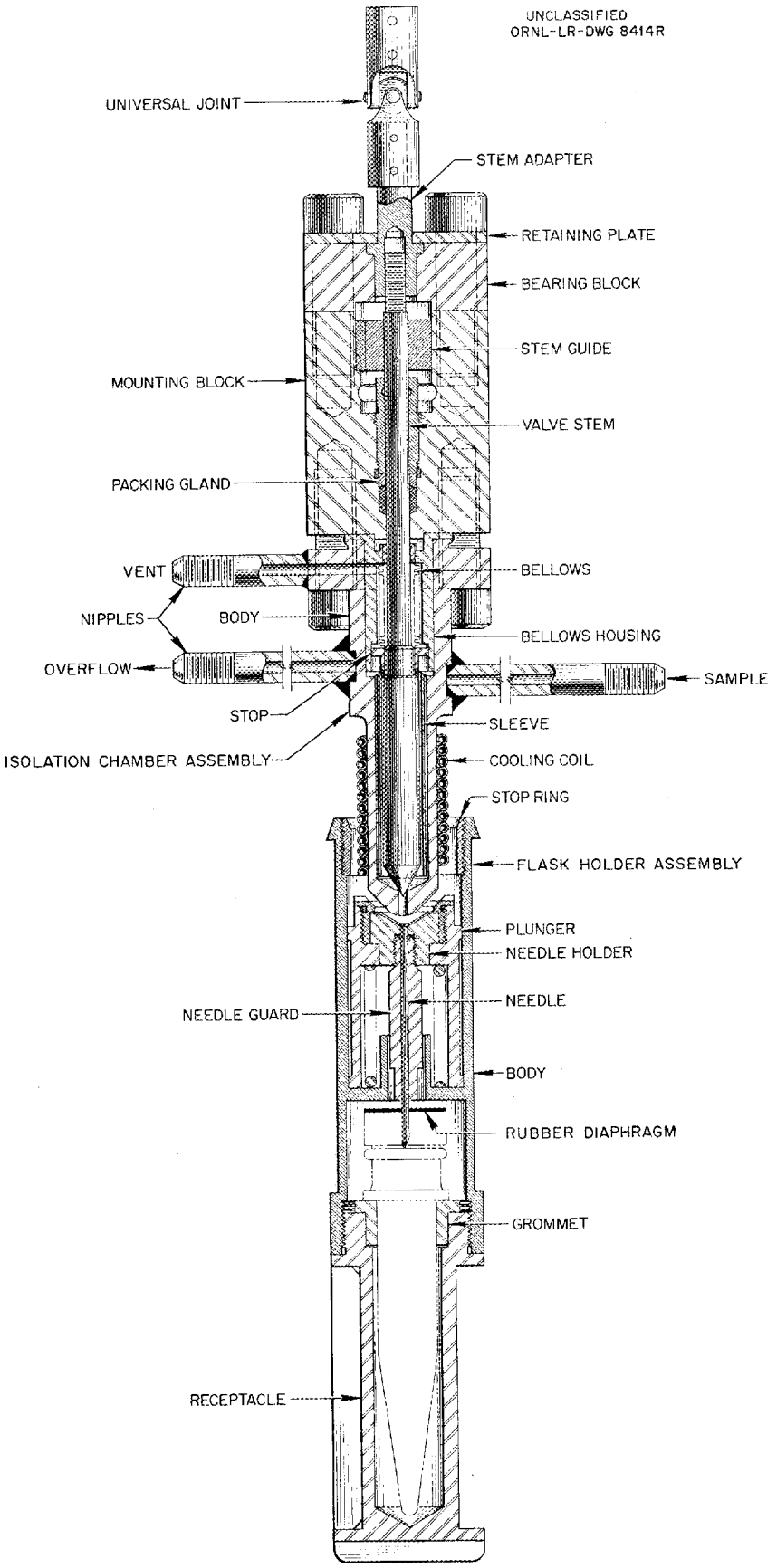

Fig. 24. HRT-CPP Sampler, Sampling Flask Holder Mechanism.

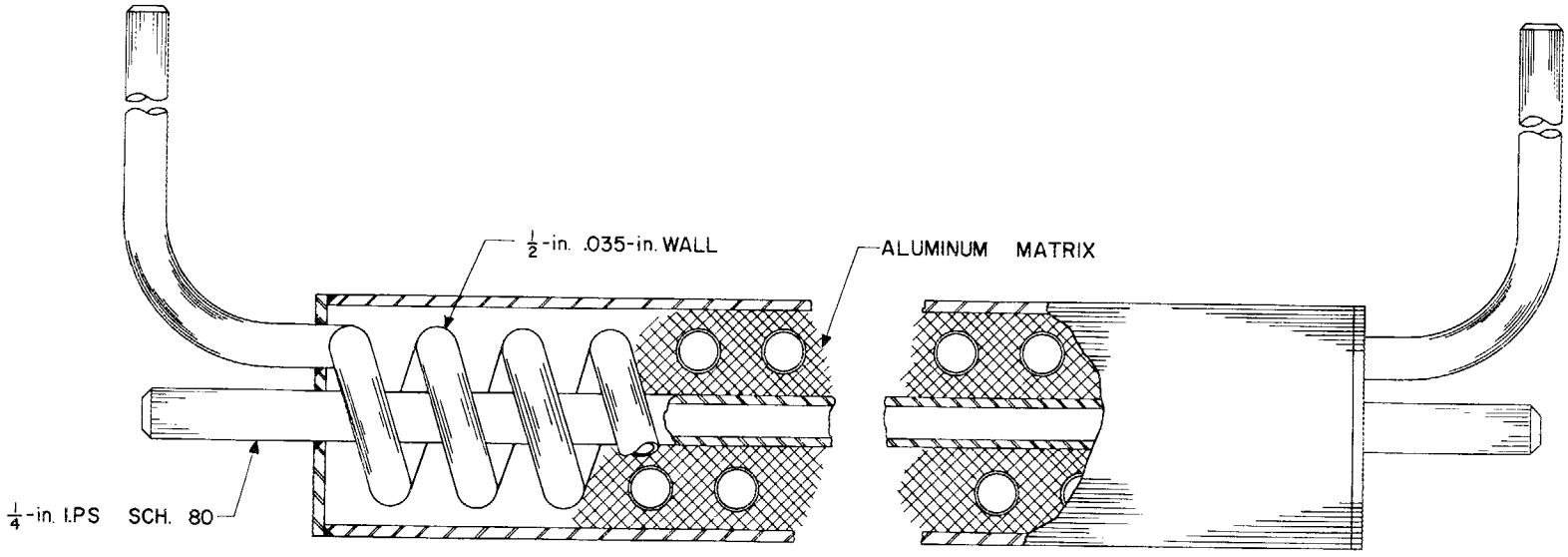

DETAIL

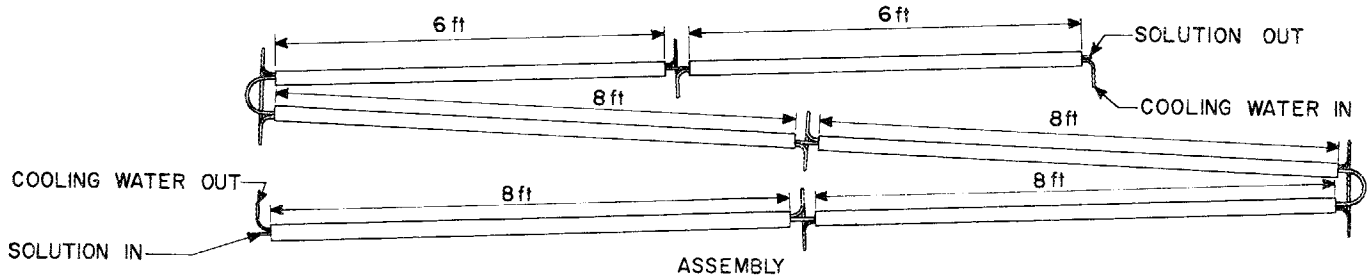

ASSEMBLY

Fig. 25. HRT-CPP Sample Cooler, H-5.

3.3 Fuel Addition System (Reference Dwg. E-25051)

The usual procedure for replacing the uranium consumed in the reactor and that removed from the processing plant with the fission and corrosion product solids is to charge it to the reactor via the chemical processing plant (Fig. 26). An alternate method is via the reactor fuel-system dump tanks. About 47 g is required to replace the uranium consumed in the reactor and 86 g to replace that discharged to the processing plant.[12]

A concentrated solution of uranyl sulfate in D_2O is charged to the fuel supply tank, from which it is pressured to either the reactor dump tank or the processing plant high-pressure system. Any uranium solution that remains in the fuel supply tank or the charging line is washed down with a small amount of D_2O from the D_2O rinse tank, and enough D_2O is added so that the solution volume, when heated to operating temperature, will just fill the high-pressure system. This D_2O, the condensate from the evaporation of the previous batch of fuel solution, is withdrawn from the D_2O receiver (T-2). The correct quantity of D_2O is charged by emptying a carefully calibrated meter tank (T-5).

After the fuel has been charged to the high-pressure system and diluted, the system is isolated from the low-pressure system and leak-checked by heating the underflow pot to 400°F and noting the system pressure. The system is pressurized to reactor operating pressure, to avoid the danger of rupturing the underflow pot by heating an accidentally overfilled system, by opening one of the valves in the line connecting it to the reactor. The piping is then heated to operating temperature at a rate of 210°F per hour by periodically opening and closing the other valve in the line connecting it to the reactor, thereby permitting intermittent flow of hot fuel solution.

The danger of an imbalance in pressure forcing radioactive solution outside the cell through the charging lines is avoided by installing automatically operated valves on both lines just inside the cell. These valves are instrumented to close when the system pressure reaches 5 psig.

Fuel Addition System Tanks T-11 and T-16. The fuel supply tank and the D_2O rinse tank are mounted outside the processing cell. Both the fuel supply tank and the D_2O rinse tank are made of lengths of 2-in. pipe; each is 8 in. long overall and has a total volume of 407 ml. The design and operating conditions are:

Design pressure	500 psia
Operating pressure	17 psia
Operating temperature	100°F

UNCLASSIFIED
ORNL-LR-DWG 34593

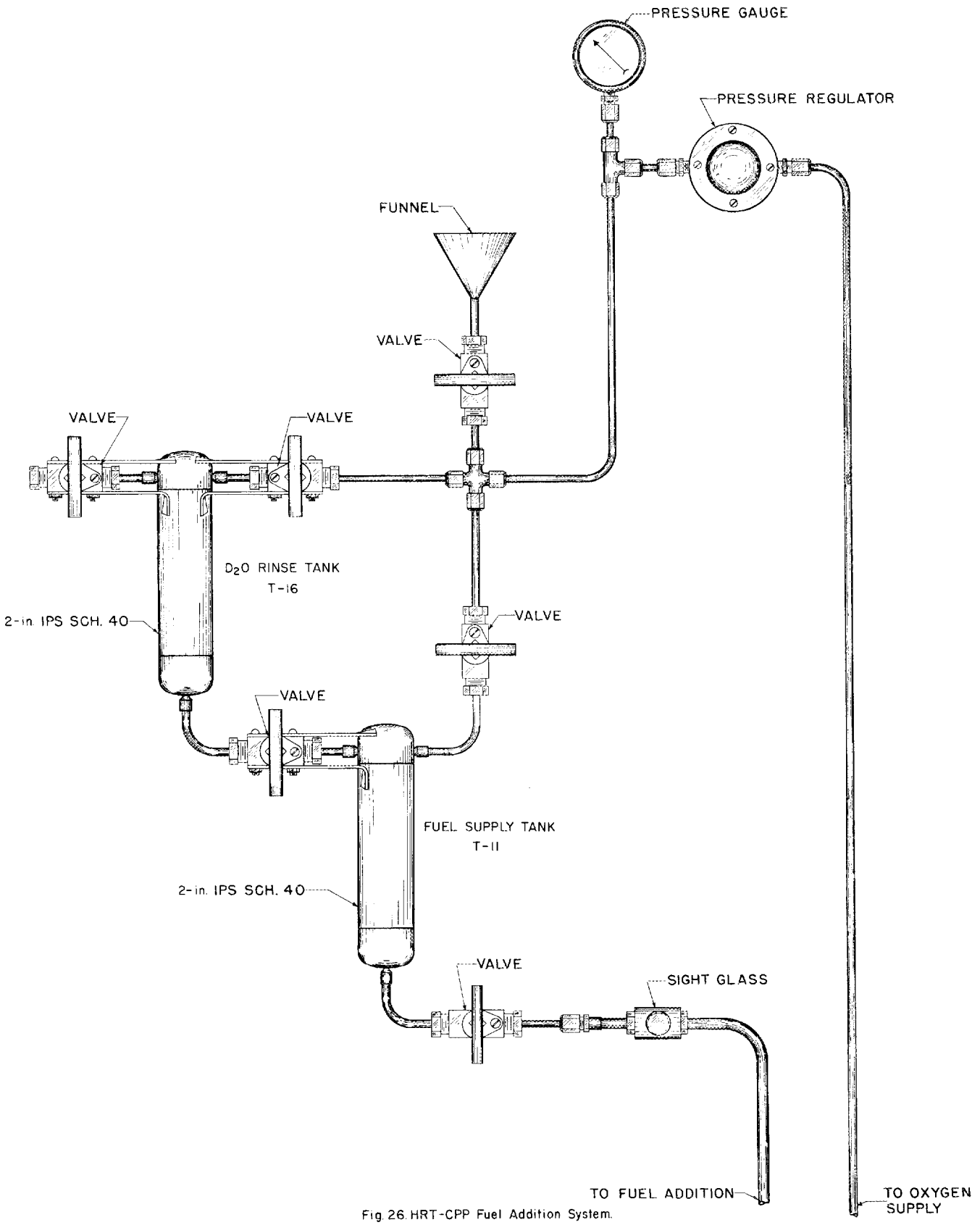

Fig. 26. HRT-CPP Fuel Addition System.

4.0 DISSOLVER AND LOW-PRESSURE SAMPLING SYSTEM

4.1 Dissolver System (Reference Dwgs D-27451 and 2)

The concentrate of fission and corrosion product solids in fuel solution is dumped once a week from the high-pressure system of the chemical plant to the dissolver. The solution is boiled until more than 95% of the D_2O has been distilled off and collected in the D_2O receiver for use in the next fuel charge to the reactor. By a system of valves and freeze plugs the dissolver is then isolated from the part of the chemical plant that contains D_2O (to prevent contamination of the D_2O inventory in the reactor with H_2O) and connected to the part that contains H_2O. Concentrated sulfuric acid is added from outside the cell to dissolve the solids, and when dissolution is complete, a sample is taken and the remaining solution is discharged to the decay storage system. The analysis of the sample of the underflow-pot solids will be compared with the analysis of the dissolved solids. If these analyses consistently agree, the dissolving operation may be discontinued.

Dissolver D-3 (Reference Dwgs. E-27401, D-27444). The dissolver (Fig. 27) is a 5.9-gal tantalum-lined vessel with a double jacket, which permits the use of steam, cooling water, or both. The valves are protected from corrosive hot dissolver solution vapor by coolers installed on each line directly below the valves, and are backed up with freeze plugs to seal minor leaks.

After the 2 gal of uranyl sulfate solution in D_2O is dumped from the underflow pot to the dissolver, the high-pressure system is washed with D_2O, which is also dumped to the dissolver. The solution in the dissolver is concentrated by boiling until its boiling point exceeds that obtainable with 30 psi steam. D_2O recovery is not carried further because subsequent dissolution of the corrosion product solids is believed to be much more difficult if these solids have previously been baked to dryness. The expected rate of boildown is 5-10 lb of D_2O per hour.

The corrosion and fission product solids in the dissolver are dissolved by hot concentrated sulfuric acid, which slowly converts a layer of oxide on each particle to the sulfate which dissolves readily in dilute acid. The dissolution procedure is a stepwise procedure of boiling the solids in concentrated acid, diluting the solution to dissolve the sulfate layer and expose fresh oxide surface, boiling again in concentrated acid to convert more oxide, diluting to dissolve the sulfate, and repeating until dissolution is complete. In practice two treatments with concentrated acid have been found to give over 99% dissolution. A concentration of between 10.8 and 10.2 M is best for converting the oxides to sulfates and a concentration of 4 M or less is suitable for dissolving the sulfate.[13]

About 15 liters of 4 M H_2SO_4 is added to the dissolver from the dissolving solution charge tank, T-26, outside the cell, and water is boiled off until boiling point readings indicate an acid concentration of 10.8 M. The 10.8 M solution is boiled for 4 hr at total reflux. The upper part of the dissolver jacket is cooled to increase internal reflux and allow the use of high boiling rates to increase agitation. Water is then added from the dissolving solution charge tank to dilute the solution to 4 M, and this solution is also boiled for 4 hr at total reflux and then evaporated to 10.8 M. The water vapors are vented to the H_2O system entrainment separator and recombiner-condenser. The solution in the dissolver is boiled another 4 hr, diluted again to 4 M, and then boiled another 4 hr. The total time at reflux is 16 hr.

UNCLASSIFIED
ORNL-LR-DWG 34592

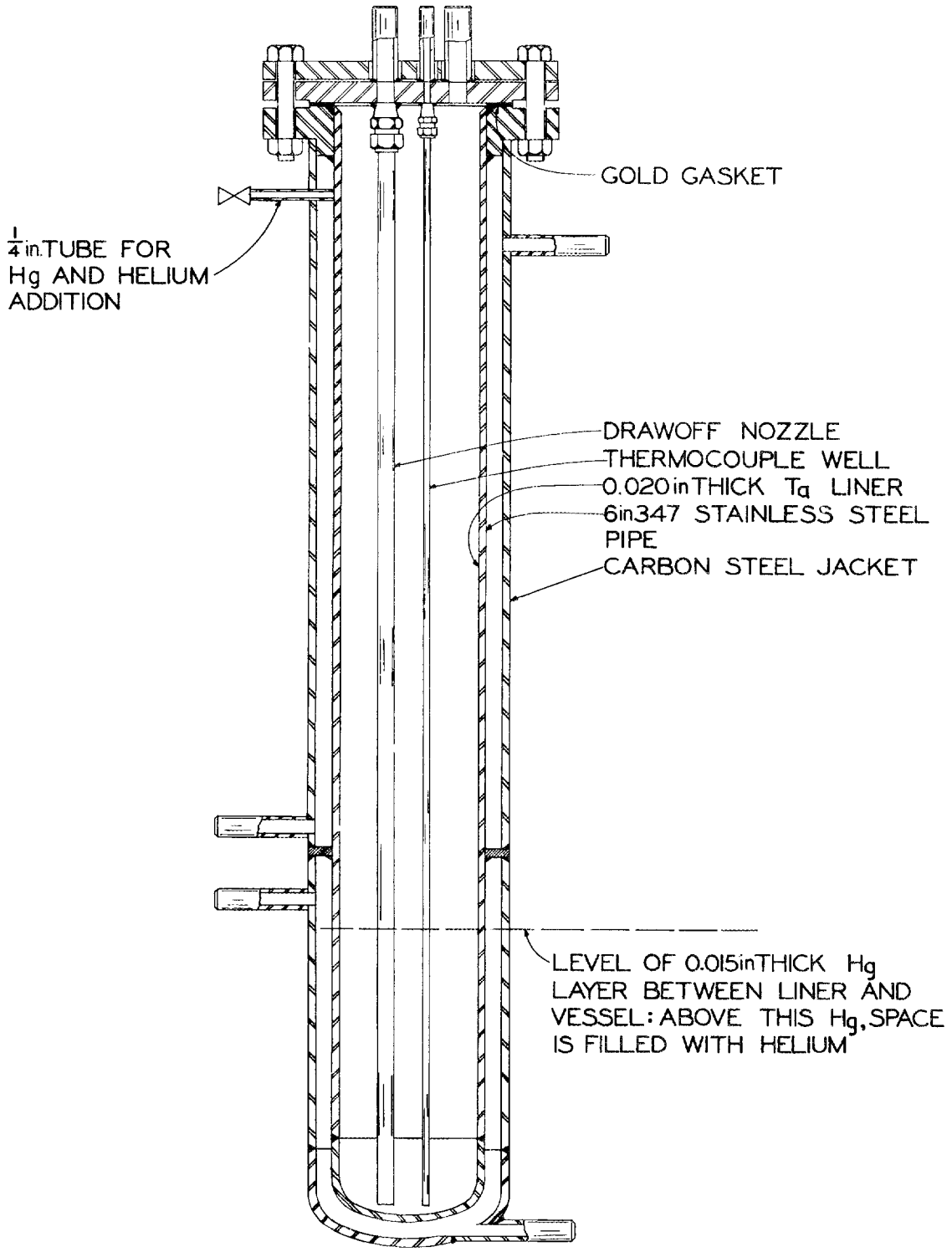

Fig. 27. HRT-CPP Dissolver D-3.

After a sample has been taken (Sec. 4.4) the solution is pressurized by boiling to one of the two decay tanks. The dissolver and sampler are washed with water charged from outside the cell and the wash solution is also transferred to a decay tank. The last traces of water are removed from the dissolver by heating with 250-lb steam with a purge of oxygen to sweep out H_2O vapor. The valves connecting the dissolver with the natural water system are then closed and the lines are sealed with freeze plugs. The valves connecting the dissolver with the D_2O system are opened and the associated freeze plugs thawed. The dissolver is then ready for the next charge.

In boiling 10.8 M sulfuric acid (Fig. 28), corrosion rate of most materials of construction is prohibitive. Only glass, tantalum, and the noble metals are resistant. Two glass-lined vessels were built for testing the process, but tantalum was selected for the plant dissolver because of its superior shock resistance and radiation stability. The dissolver is a 4-ft section of 6 in. pipe flanged on the upper end. A 0.02-in.-thick tantalum liner is fitted inside the vessel. This liner has sufficient rigidity to withstand without buckling the pressure variations expected in the operation of the dissolver, i.e., from full vacuum to 30 psia. The gasket for the flanged dissolver head is made of thin gold sheet. The flanged head is made of Carpenter-20 stainless steel since tests have shown that corrosion in the vapor space at this height above the solution is negligible.

In test runs, heat transfer from the jacket to the solution was found to be poor because of the small air gap between the tantalum liner and the dissolver vessel proper. This was remedied by filling the gap with mercury to a height of about 1 ft and with helium the rest of the way. (The gap could not be filled with mercury to a higher level without risking collapse of the liner under vacuum operation.) The corrosion of tantalum by mercury at the operating temperature of the dissolver was found to be acceptably low.[14]

Instrumentation for the dissolver consists of a thermowell for measuring solution temperature and a bubbler probe for level indication. In order to reduce the number of connections to the dissolver vessel, the 3/4-in. dip leg was used for a bubbler line. Density is determined by sampling and analyzing the dissolver solution.

The dissolver is insulated with six to eight thicknesses of aluminum foil wrapped with aluminum mesh. The design and operating conditions are:

Volume	5.9 gal
Operating volume	Variable
Design pressure	500 psia
Operating pressure	0 - 30 psia
Operating temperature	80 - 400°F
Cooling water service	2 gpm
Heat transfer area	
Upper jacket	4.26 ft^2
Lower jacket	2.50 ft^2

Reflux Condenser H-21 (Reference Dwg. D-27419). The H-21 reflux condenser condenses and cools the vapor reaching it during the boiling of the dissolver contents and thereby reduces the corrosion of valve HCV D-3-4 mounted above the condenser.

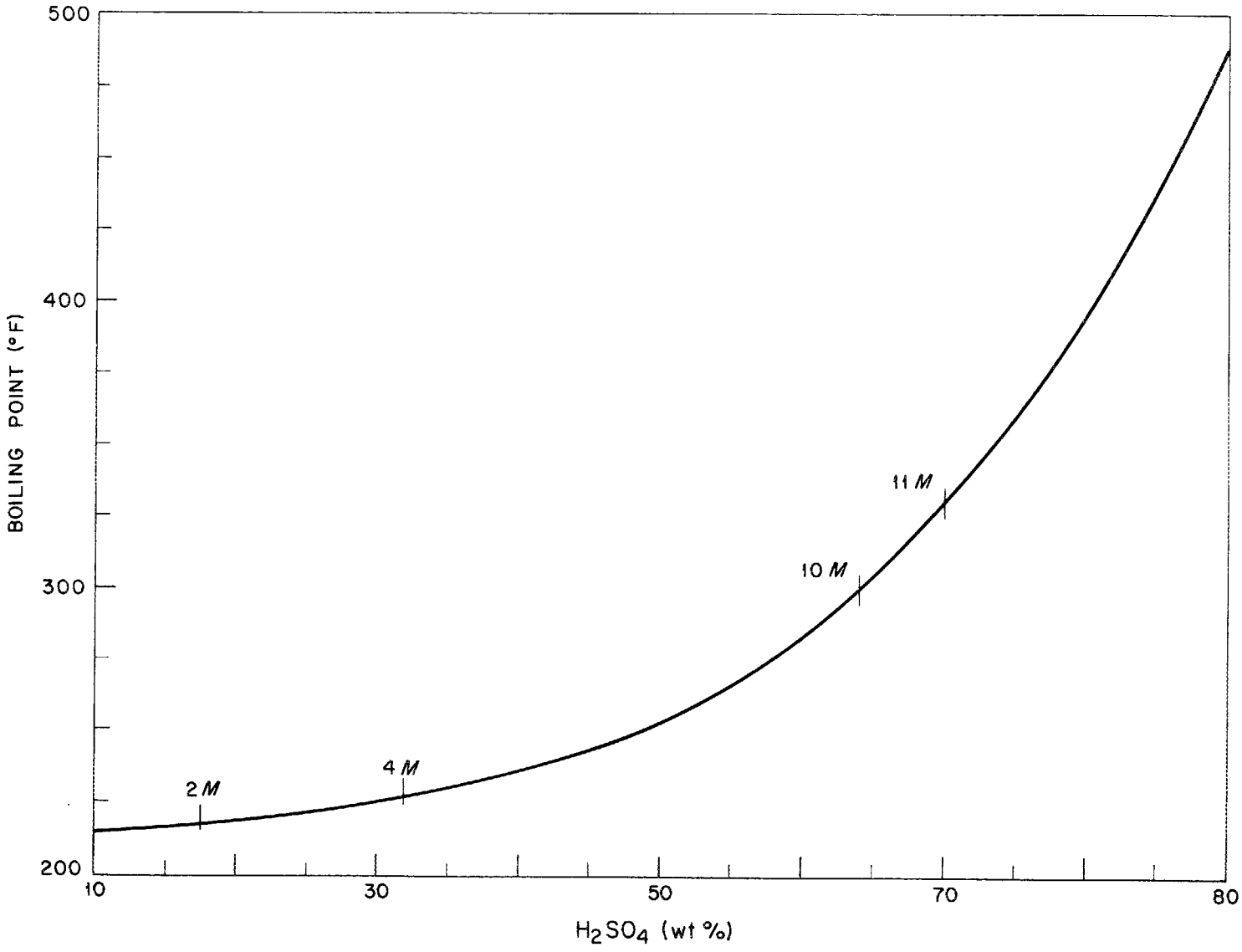

Fig. 28. Boiling Point of H_2SO_4 Solutions

The condenser is a 1-ft 3-in. length of jacketed Carpenter-20 pipe which drains to the dissolver. Service connections are provided for either steam or cooling water. There is an expansion joint on the jacket. The design and operating conditions are:

Design pressure	500 psia
Operating pressure	30 psia
Operating temperature	80 - 250°F
Heat transfer area	0.3 ft^2
Cooling water service	1.0 gpm

Jackets H-16 and H-17 (Reference Dwg. D-24221). These coolers are 1-ft lengths of jacketed pipes installed beneath the entrainment separators S-2 and S-3 (Fig. 3). They condense water vapor to form and maintain a water seal to keep water vapor flowing in the desired direction and prevent possible short-circuiting of the condenser circuit. Cooler H-16 is mounted below S-2 and cooler H-17 is below S-3. The design and operating conditions are:

Design pressure	500 psia
Operating pressure	17 psia
Operating temperature	100°F
Cooling water service	1 gpm

Reflux Condenser H-20 (Reference Dwg. C-27418). The H-20 reflux condenser condenses the vapor boiled off from the dissolver during the refluxing. The condenser is a 2-ft 6-in. length of jacketed Carpenter-20 pipe which drains to the dissolver. Service connections are provided for either steam or cooling water. There is an expansion joint on the jacket. The design and operating conditions are:

Design pressure	500 psia
Operating pressure	30 psia
Operating temperature	80 - 250°F
Heat transfer area	0.6 ft^2
Cooling water service	4.0 gpm

4.2 Dissolver Recombiner System

Entrainment Separators S-2 and S-3 (Reference Dwg. D-20240 and 41). The two entrainment separators, S-2 and S-3 (Fig. 29) in the D_2O and H_2O systems, respectively, are identical in the essentials of construction. They remove entrained liquid from the vapor boiled from the solution in the dissolver or decay tanks. The separators are 4 in. dia and 3 ft 6 in. long and are made of 347 stainless steel. Each unit is jacketed with a 7-in.-dia stainless steel can filled with Santo-Cel insulation.[15]

Vapor enters an entrainment separator through a tangential entry that separates the large droplets by centrifugation. Immediately above, a baffled section creates several 90° changes in the direction of the vapor stream and separates smaller droplets by impingement. In a third section above the baffles an 8-in. thickness of Yorkmesh removes the smallest droplets. An overall de-entrainment factor of at least 10^4 is expected.[16]

The subsequent evaporation of liquid that has impinged on the Yorkmesh will leave deposits of solids. If these deposits should accumulate sufficiently to plug the

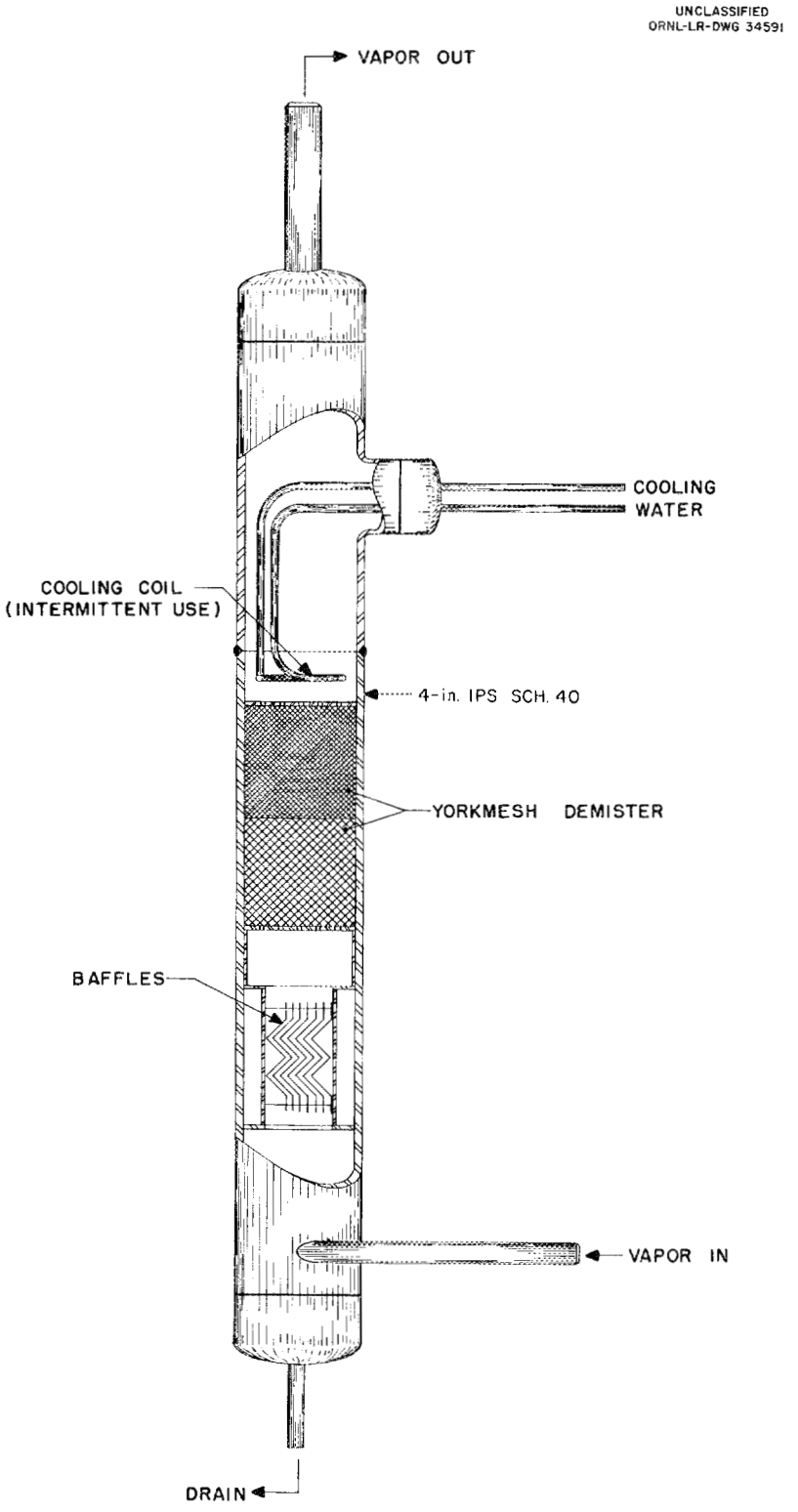

Fig. 29. HRT-CPP Entrainment Separators S-2, S-3.

separator, cooling water will be sent through a small coil above the wire mesh to create condensate which will wash the deposits from the mesh. The coil has a condensing capacity of 23 lb/hr.

The entrainment separators were designed for a maximum throughput of 85 lb/hr. It is not now expected that a throughput higher than 20 lb/hr will be used. The design and operating conditions are:

Design pressure	500 psia
Operating pressure	17 psia
Operating temperature	210°F
Cooling water service (intermittent)	2 gpm

Superheaters H-7 and H-8 (Reference Dwg. C-20266). The two superheaters, H-7 and H-8, in the D_2O and H_2O systems, respectively, are identical in construction. They superheat the vapor going to the recombiners to prevent condensation on the catalyst bed and to increase the efficiency of recombination. Each superheater is a 2-ft 9-in. length of jacketed 1-in. 347 stainless steel pipe (Fig. 30). Steam at 250 psi heats the exit vapor to a calculated 293°F at a 10-lb/hr flow rate.[17] A thermowell is installed in the vapor exit line. The design and operating conditions are:

Design pressure	500 psia
Operating pressure	17 psia
Operating temperature	293°F
Heat transfer area	0.76 ft^2
Steam consumption	1.33 lb/hr

Recombiners R-3 and R-4 (Reference Dwg. D-20253). The two recombiners, R-3 and R-4, in the D_2O and H_2O systems, respectively, are identical in construction. They recombine the radiolytically produced deuterium (or hydrogen) and oxygen to prevent these gases from building up to such concentration that they become an explosion hazard.

Recombiner R-3 is operated about 8 hr/week to recombine about 1.3 moles of D_2. As this gas is produced it is diluted with sufficient D_2O vapor to be kept well below the explosive limit at all times. Recombiner R-4 is operated about 24 hr/week to recombine about 3.8 moles of H_2. During the remaining part of the week the recombiners R-3 and R-4 are not used; the recombiners on the decay tanks will recombine the radiolytically produced H_2, the only explosive gas produced in the processing plant during this time.

The recombiners (Fig. 31) are built of a 7-in. length of 3-in. pipe, 5 in. of which is filled with platinized alumina in the form of 1/8 x 1/8-in. right circular cylinders. A thermocouple is mounted in the middle of the catalyst bed.[18] A heating mantle keeps the catalyst bed dry to prevent poisoning by moisture. The mantle cradles the lower half of the recombiner in such a way that the recombiner can be removed for maintenance without removing the mantle. The heat load is calculated to be 124 Btu/hr; 250-pound steam will be used. The design and operating conditions are:

UNCLASSIFIED
ORNL-LR-DWG 33890

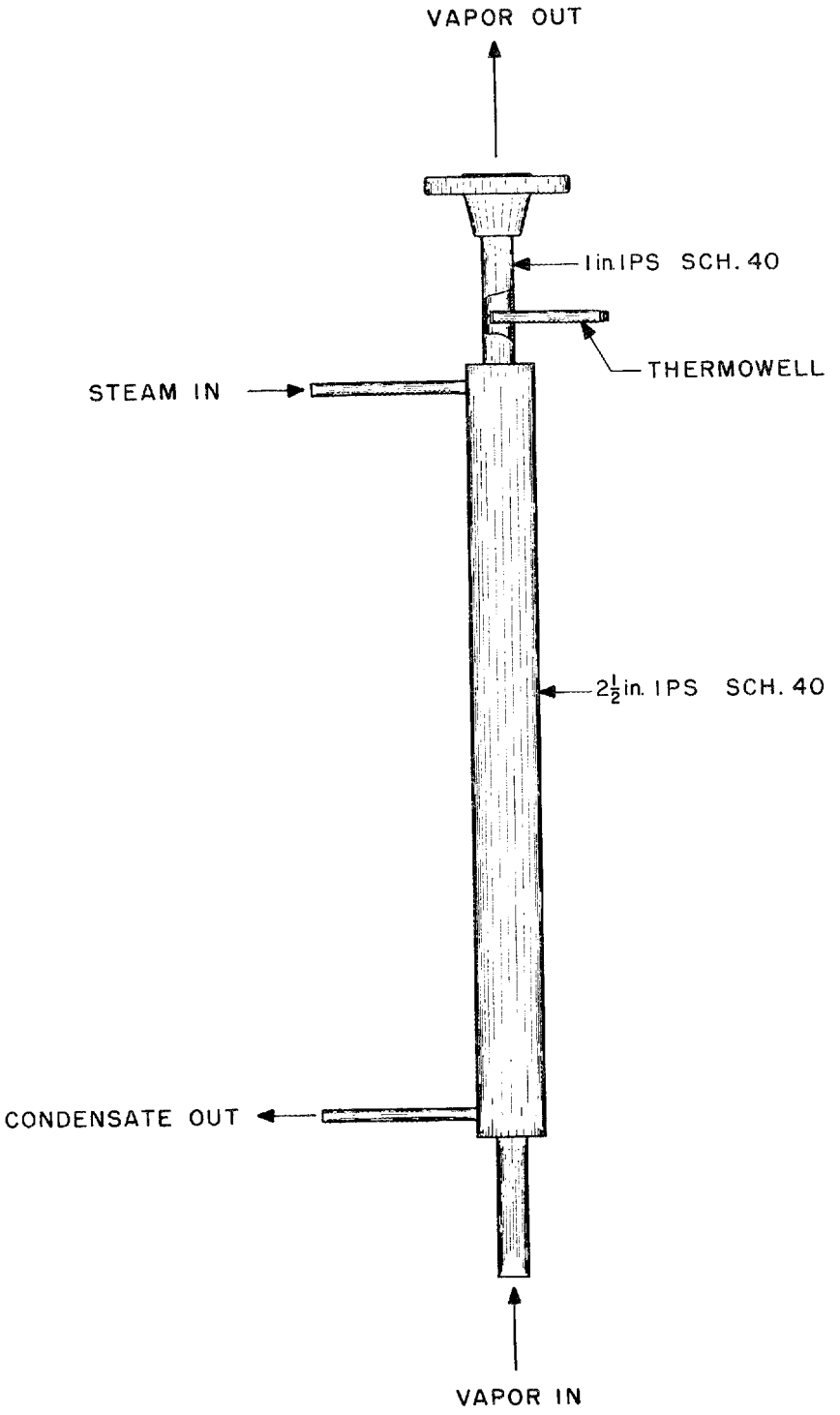

Fig. 30. HRT-CPP Superheaters H-7 & H-8.

UNCLASSIFIED
ORNL-LR-DWG 34589

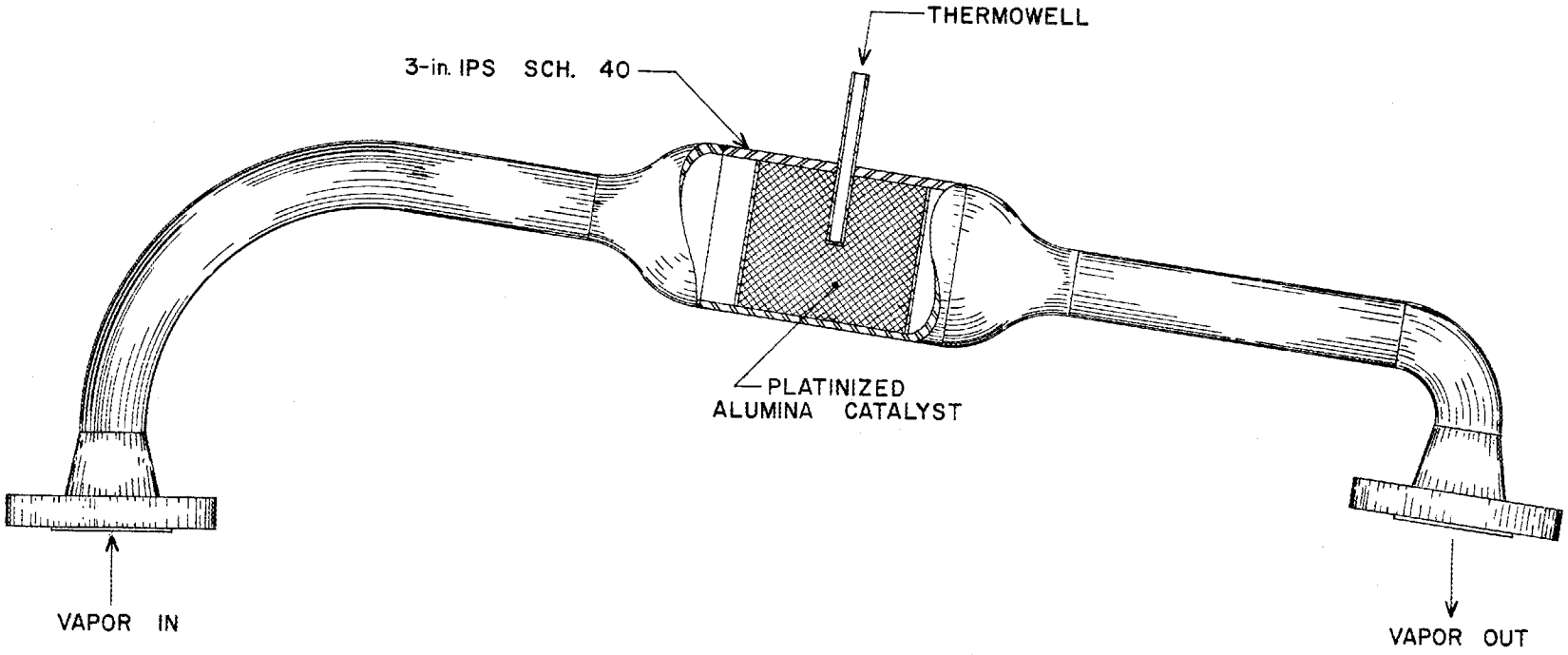

Fig. 31. D_2-O_2 Recombiners R-3, R-4 for HRT-CPP.

Design pressure	500 psia
Operating pressure	17 psia
Operating temperature	295°F

Condensate Gage Tank T-3 (Reference Dwg. C-24184). For easy dissolution of the solids removed from the reactor it is essential that they not become dry during the D_2O recovery step. To prevent this the 350 cc of D_2O in the condensate gage tank may be emptied into the dissolver at the end of each boildown. The design and operating conditions are:

Design pressure	500 psia
Operating pressure	17 psia
Operating temperature	140°F
Total volume	354 ml

Condensers H-1 and H-2 (Reference Dwg. D-20253). Condenser H-1 in the D_2O system condenses the vapor boiled off from the dissolver. Condenser H-2 serves a similar function in the H_2O system.

The condensers are a conventional design of shell-and-tube heat exchanger (Fig. 32). Nineteen 1/2-in. 18-gage tubes 3 ft long are used. The total heat transfer area is 7.5 ft^2. An expansion joint is provided on the jacket for relief of thermal stresses.[19] The design and operating conditions are:

Design pressure	500 psia
Operating pressure	17 psia
Operating temperature	293 - 140°F
Heat transfer area (outside)	7.46 ft^2
Cooling water service	2 gpm

Jacket H-14 (Reference Dwg. D-24217). A seal is needed in the reflux line from condenser H-1 to dissolver D-3 to prevent D_2O vapor from by-passing the condenser system and overloading the cold trap. This seal is provided by putting a loop in the reflux line and installing a small condenser on the loop to condense sufficient D_2O vapor to make the initial seal. The jacket is a 4-ft length of jacketed 1/2-in. pipe. The design and operating conditions are:

Design pressure	500 psia
Operating pressure	17 psia
Operating temperature	100°F
Heat transfer area (inside)	0.65 ft^2
Cooling water required	0.5 gpm

Iodine Removal Unit. The catalyst in recombiner R-3 will be poisoned by any iodine reaching it from the reactor. Most of the small amount of iodine in the solution discharged from the underflow pot will be stripped from this solution during the first boiling so that R-4 will not be affected.

The amount of iodine in the solution discharged from the underflow pot has been calculated to be about 0.5 mg/week, mostly I^{133} and I^{131}. The extent to which this quantity of iodine will poison the recombiner catalyst is not accurately known; some

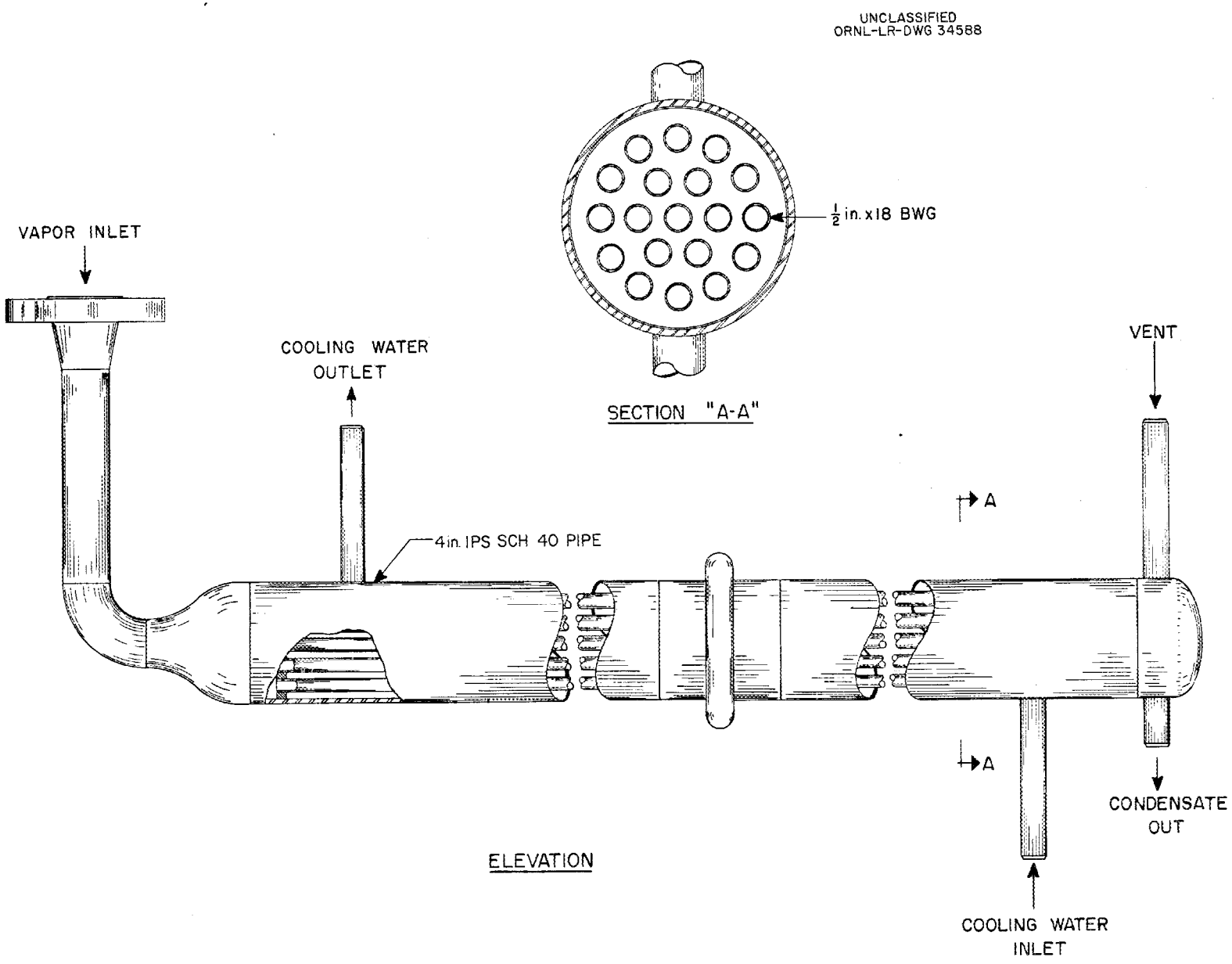

Fig. 32. Condenser H-1 & H-2 for HRT-CPP.

experimental evidence indicates that a 10-year accumulation would be required to cause a detectable effect. In case the poisoning effect should be much greater, however, some protection for the recombiner is desired. A small can containing silvered Yorkmesh is installed in the vapor line between the superheater H-7 and the recombiner R-3. A large part of whatever iodine is in the vapor stream will react with the silver coating and not reach the recombiner.

4.3 Dissolver Addition System, D_2O Storage and Metering System

D_2O Receiver T-2 (Reference Dwg. D-20264). The D_2O receiver is the D_2O storage vessel for the processing plant (Fig. 33). It is fed with condensate from condenser H-1 and, if needed, with makeup D_2O through the fuel addition system. The D_2O evaporated from each batch of fuel solution is stored in this vessel until it is later used to make up the fuel solution charged back to the reactor. The vessel is 12 in. dia and 24 in. long and has a capacity of 10.2 gal. Two methods of level indication are provided, a weigh cell and a thermal level probe. The design and operating conditions are:

Design pressure	500 psia
Operating pressure	17 psia
Operating temperature	140°F
Total volume	10.2 gal

D_2O Meter Tank T-5 (Reference Dwg. C-24202) and Pressure Reservoir T-5A. The meter tank (Fig. 34) is sized to hold the correct volume of D_2O to be returned to the reactor at the beginning of each run via the underflow pot. It is filled by gravity from the D_2O receiver by thawing a freeze plug in the connecting line. The meter tank is 3 in. dia and 66-3/4 in. long. It is mounted horizontally so as to fill by gravity from T-2 and to drain by gravity into the underflow pot. However, gravity draining has not worked well because of air bubbles collecting in the drain line, and a pressure reservoir, T-5A was installed. T-5 is pressurized by charging T-5A with oxygen under 3-5 lb pressure, which is sufficient pressure to empty T-5 and not enough to blow large quantities of air through the underflow pot and vent system. The pressure reservoir is 4 in. dia and 1 ft 6 in. long; its volume is 0.94 gal.

The design and operating conditions of the meter tank are:

Design pressure	500 psia
Operating pressure	17 psia
Operating temperature	140°F
Volume	7.8 liters

Dissolving Solution Addition System (Reference Dwgs. D-27405, C-27436). The dissolving solution addition system (Fig. 35) charges sulfuric acid, process water, and wash water to the dissolver. It consists of the charge tank T-26, the addition tank T-28 and the acid demister S-4. Solution is measured into T-28 and then dropped into T-26. T-26 is valved off from the processing cell and vented through S-4. The valve below T-28 is then closed, the vent valve is closed, and the pressure in T-26 is equalized to that of the processing system. The valves between T-26 and the processing equipment are opened and the solution is drained into the dissolver.

Accidental discharge of process solution through the dissolver solution charge line is prevented by instrumenting the valve in this line to remain closed until the

UNCLASSIFIED
ORNL-LR-DWG 34587

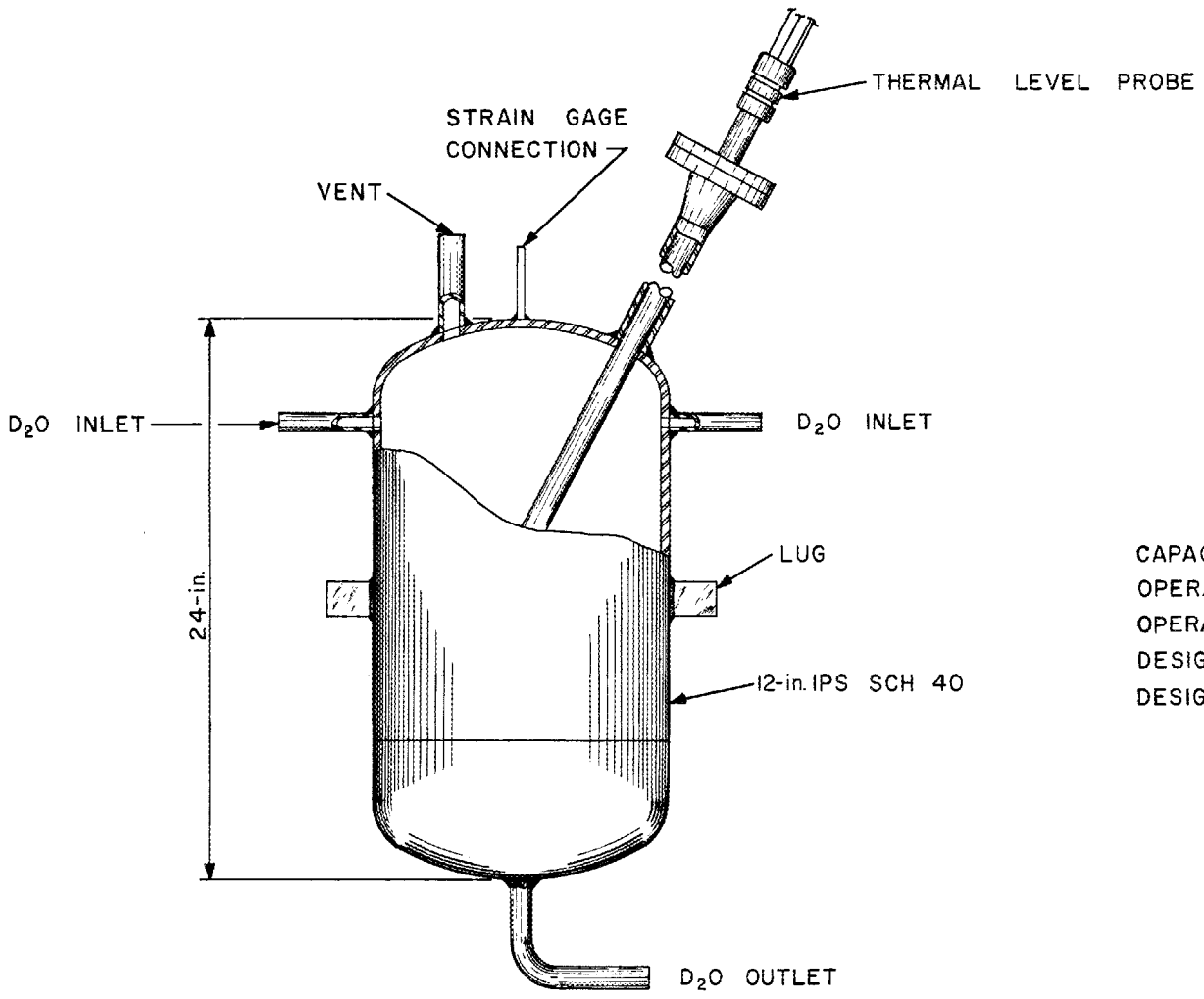

DESIGN DATA

CAPACITY ———— 10.2 GAL
OPERATING TEMP. -- 70°-200° F.
OPERATING PRESS. -- 17 PSIA
DESIGN PRESS. ——— 500 PSIG
DESIGN TEMP. ——— 200° F

Fig. 33. HRT-CPP D_2O Receiver T-2.

UNCLASSIFIED
ORNL-LR-DWG 33873

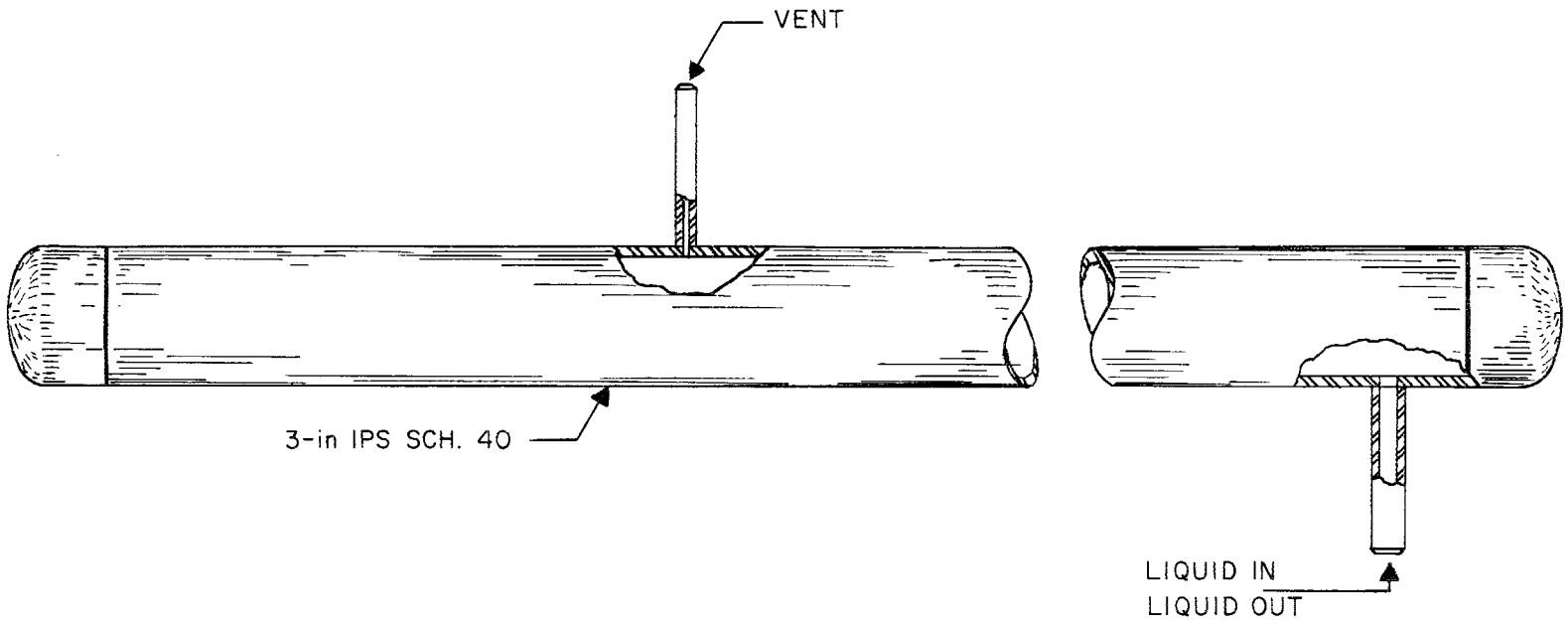

Fig. 34. HRT-CPP D_2O Meter Tank T-5.

UNCLASSIFIED
ORNL-LR-DWG 34586

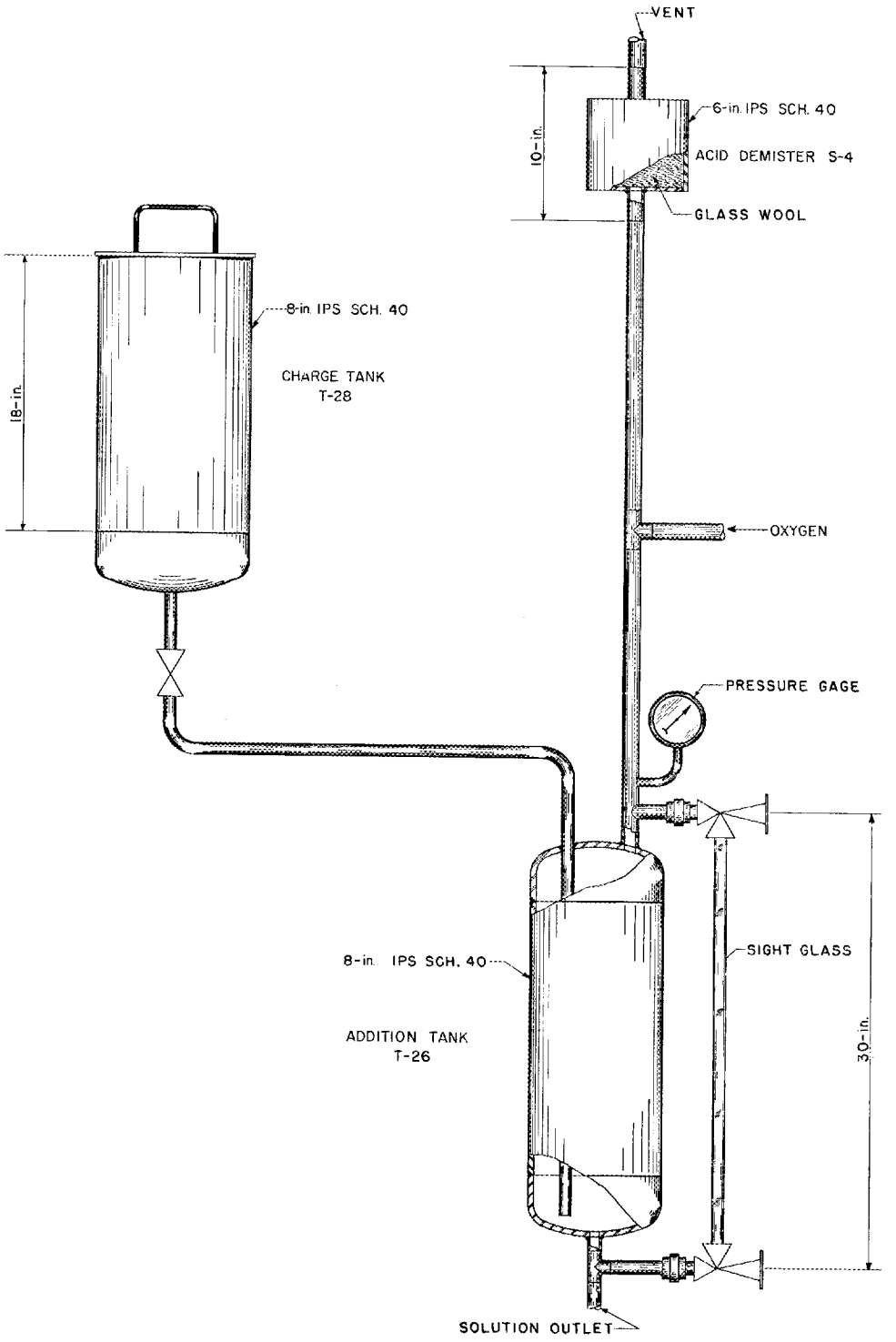

Fig. 35. HRT-CPP Dissolving Solution Addition System.

pressure in the processing system is too low to force solution outside the cell. This valve is just inside the processing cell.

The charge tank is a 5.1-gal tank mounted outside the processing cell. It is made of Carpenter-20 stainless steel to reduce the corrosion from the sulfuric acid. Instrumentation includes a sight glass and a pressure gage. The design and operating conditions are:

Design pressure	500 psia
Operating pressure	17 psia
Operating temperature	100°F
Volume	5.1 gal

The addition tank is an open top 4.5-gal tank mounted above and draining into T-26. This tank is also made of Carpenter-20. The design and operating conditions are:

Design pressure	15 psia
Operating pressure	15 psia
Operating temperature	100°F
Volume	4.5 gal

The acid demister is a small vessel mounted in the vent system of T-26. It prevents any entrained acid from reaching the vent valve and vent lines above. A 5-in. layer of glass wool is used for the de-entraining. The design and operating conditions are:

Design pressure	100 psia
Operating pressure	17 psia
Operating temperature	100°F
Volume	0.1 ft^3

4.4 Low-pressure Sampling System (Fig. 36)

Dissolver Discharge Coolers H-22 and H-24 (Reference Dwg. C-27420). Corrosion of the stainless steel sampler by the sulfuric acid dissolver solution is kept to a tolerable level by cooling the solution to about 120°F before it is sent through the sampler. At the probable rate of solution flow, about 30 ft of cooler is required to obtain this degree of cooling. It would be best to install this cooler below the valve in the discharge line from the dissolver so that the valve would also be protected from excessive corrosion, but there is not room for so large a cooler in this location. These conflicting requirements of valve protection and space requirements are compromised by using two coolers, one below the valve to cool the solution sufficiently to furnish partial protection to the valve and the other above the valve for the additional cooling. Cooler H-22 is mounted below the valve and cools the solution to about 170°F; cooler H-24 is mounted above the valve and cools the solution to about 120°F.

The solution flow rate through the sampler circuit is determined by the pressure built up in the dissolver and the pressure drop in the sampler (Fig. 37); all other pressure drops in the circuit are negligible. The rate of pressure buildup depends on the operating procedure. The flow through the low-pressure sampler

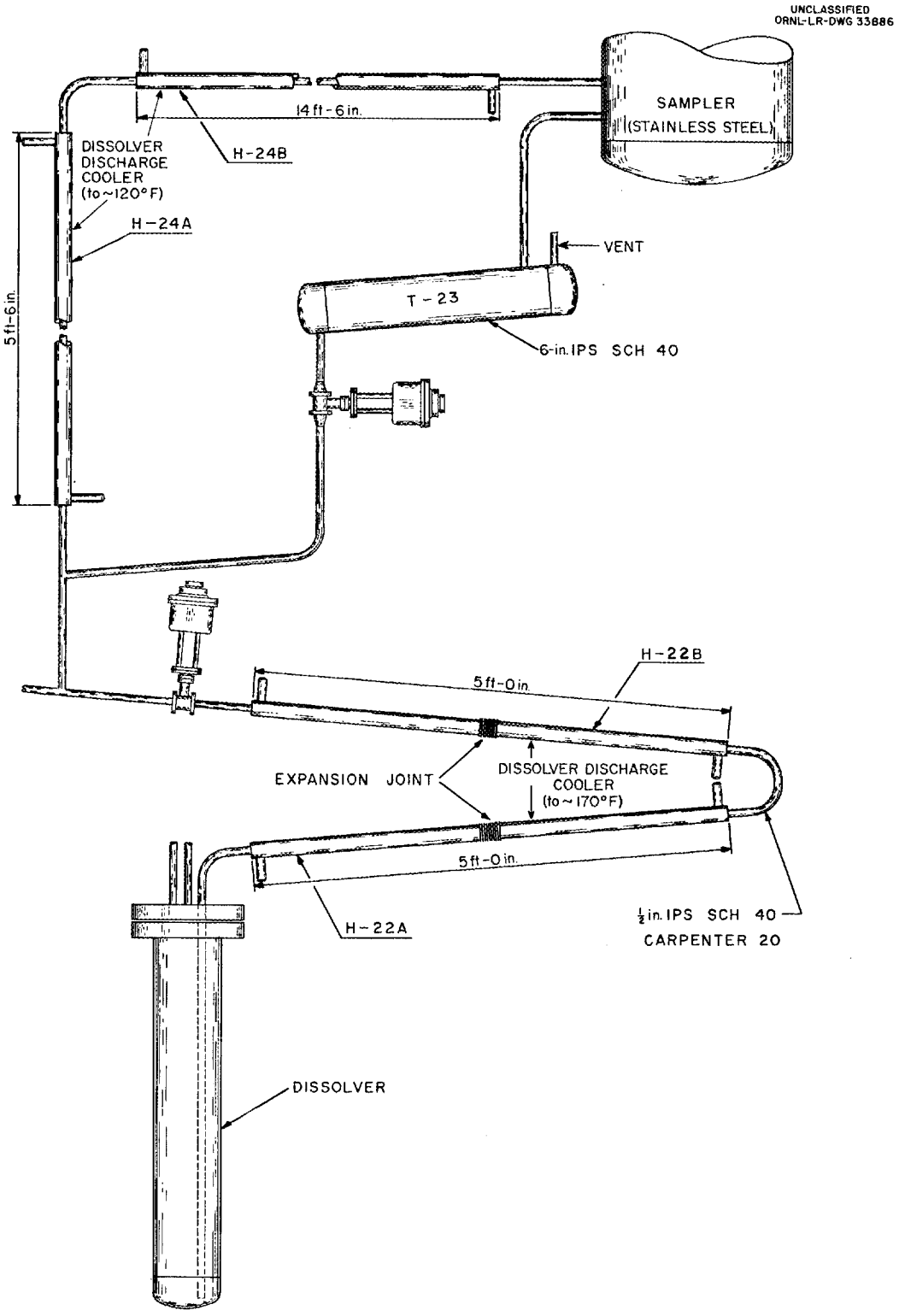

Fig. 36. HRT-CPP Low-Pressure Sampling System.

UNCLASSIFIED
ORNL-LR-DWG 33874

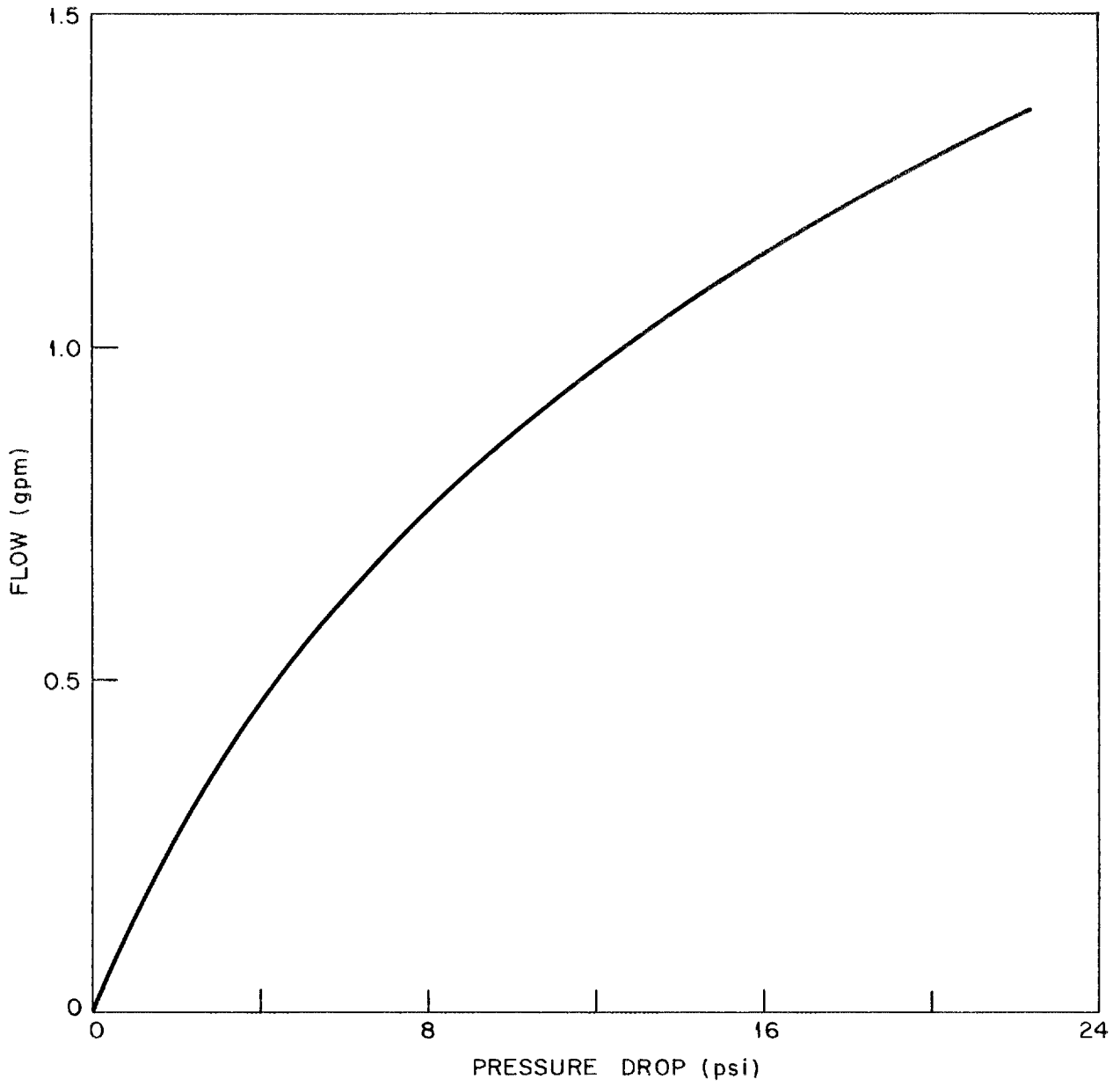

Fig. 37. Pressure Drop in HRT Low-Pressure Sampler.

at a given heating rate is shown in Fig. 38. Since the heat input to the dissolver may not be limited to this low value, a flow rate of 0.75 gpm has been assumed for design calculations.

Cooler H-22 is built in two sections, each 5 ft long. Each unit is a jacketed length of 1/2-in. Carpenter-20 pipe. An expansion joint is provided on the jacket to relieve thermal stresses. The design and operating conditions are:

Design pressure	500 psia
Operating pressure	30 psia
Inlet solution temp	250°F
Outlet solution temp	170°F
Duty	37,000 Btu/hr
Heat transfer area	2.3 ft^2
Cooling water required	5.1 gpm

Cooler H-24 (Reference Dwg. C-27423) is built in two sections for ease in installation. One section is 5-1/2 ft and the other 14-1/2 ft long. Each unit is a jacketed length of 1/2-in. Carpenter-20 pipe. The design and operating conditions are:

Design pressure	500 psia
Operating pressure	30 psia
Inlet solution temp	170°F
Outlet solution temp	120°F
Duty	26,500 Btu/hr
Heat transfer area	4.6 ft^2
Cooling water required	5.1 gpm

Sampler (Reference Dwgs. E-15820, D-15821 and 2, C-15823, D-15824 through 7, C-15828 and 9, D-15830 through 6, D-15839 through 42, E-15843, D-15844 and 5). The low-pressure sampler takes a sample of the dissolver contents after dissolution is complete. This sample is obtained by boiling the solution in the dissolver and thus pressurizing the solution through the sampler. The solution is cooled before reaching the sampler to minimize corrosion. Solution is discharged from the sampler to a hold tank (T-23), held until sampling is completed, and dropped back to the dissolver. Sampling consists in trapping a small portion of this stream in an isolation chamber and by remote means transferring this sample to a carrier which is transported to the analytical laboratory.

The sampler is similar to the high-pressure sampler in the chemical plant and to the samplers used in the reactor.

The sample hold tank is sized to hold the entire contents of the dissolver in case a sample has not been taken before the dissolver is emptied.

Sample Hold Tank T-23 (Reference Dwg. C-27407). The sample hold tank is a 5.9-gal tank that holds the solution discharged from the sampler. It is sized to hold the entire contents of the dissolver in case a sample has not been taken before the dissolver has been pressurized empty. The contents of the sample hold tank can be dropped back to the dissolver or to either of two decay tanks (T-21 and T-22).

UNCLASSIFIED
ORNL-LR-DWG 33875

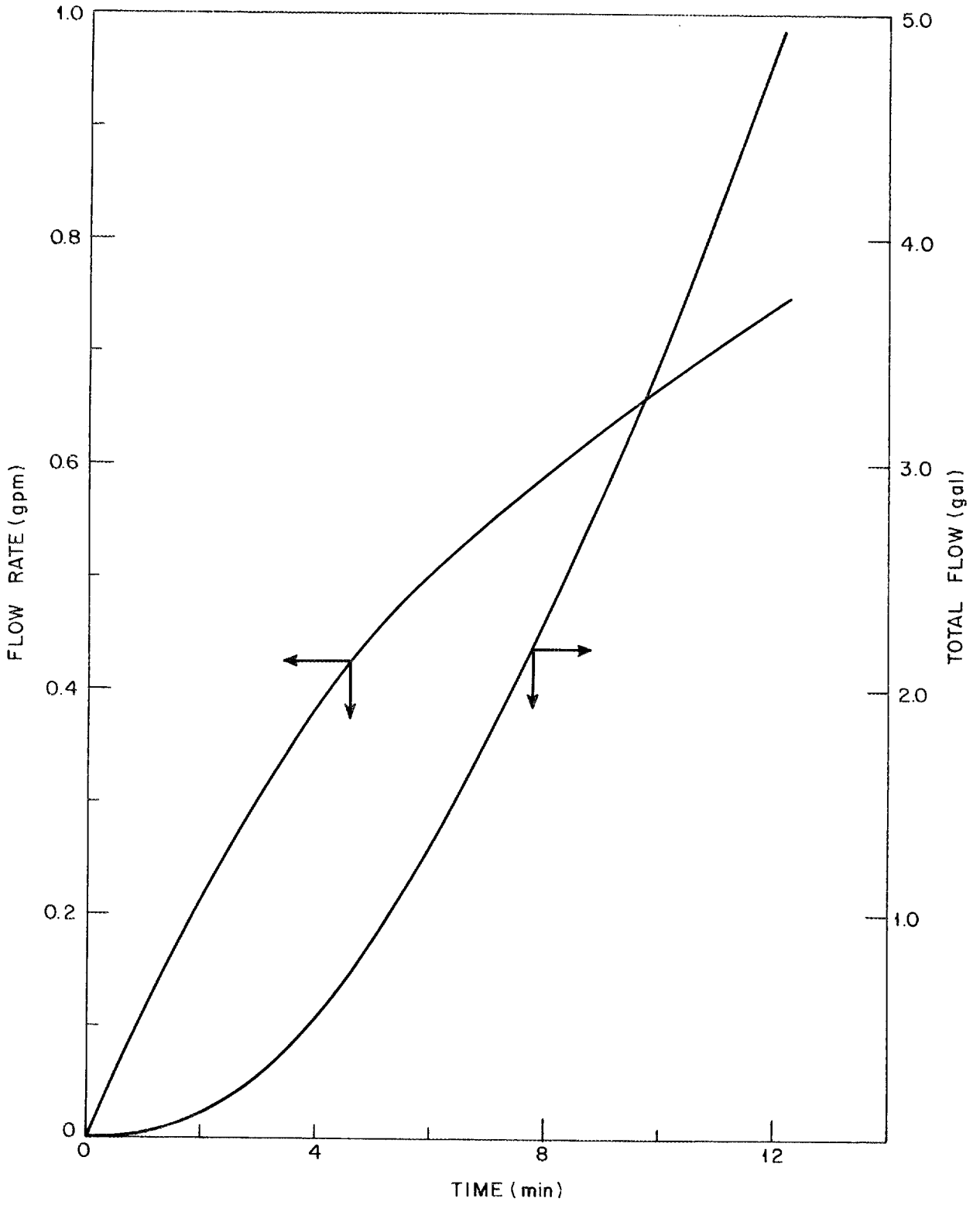

Fig. 38. Flow Through HRT-CPP Low-Pressure Sampler. Dissolver heated at 3700 btu/hr.

The sample hold tank is 6 in. dia and 4 ft 1 in. long and is made of Carpenter-20 stainless steel. The tank is installed at a slight angle to facilitate draining. The design and operating conditions are:

Design pressure	500 psia
Operating pressure	17 psia
Operating temperature	120°F
Total volume	5.9 gal

5.0 DECAY STORAGE SYSTEM

After dissolution and sampling of the fission and corrosion products, the 4 M solution is pressurized to one of two 90-gal decay tanks, T-21 or T-22 (Reference Dwg. D-27452). The dissolver is rinsed and the rinse solution is charged to the same tank. The dissolver solution and rinse are accumulated in the same tank until 13 batches have been stored. During this time the solution is occasionally boiled to concentrate it to 4 M and reduce its volume. The solution in one tank is allowed to decay for 13 weeks while the other tank is being filled. At the end of the decay period the solution is dropped in batches to a transfer tank and pressurized outside the cell to a carrier.

Decay Tanks T-21 and T-22 (Reference Dwg. D-27411). Decay tanks T-21 and T-22 are identical in the essentials of construction (Fig. 39). They store the 4 M H_2SO_4 solution of fission and corrosion products until it has decayed sufficiently to be handled outside the cell. The activity of the solution in the decay tanks as a function of time is shown in Fig. 40.

The tanks are 18 in. in diameter and 8 ft 4 in. long and are made of Carpenter-20 stainless steel. The tanks are jacketed along a 5-ft 9-in. length with connections for steam or cooling water. An expansion joint is provided to relieve thermal stresses in the jacket. Insulation is six to eight thicknesses of aluminum foil.

The solution stored in the decay tanks has a maximum sulfuric acid concentration of 4 M. At the boiling point of this solution the overall corrosion rate of Carpenter-20 is 20 mils/year and there is also considerable stress corrosion cracking. To keep this corrosion at a minimum the solution is boiled only when necessary to concentrate it to 4 M. This boiling is required three times, for a total of about 12 hr, every 6 months. The rest of the time the solution is kept at a temperature of about 100°F. At this temperature the corrosion of Carpenter-20 in pure 4 M H_2SO_4 is 0.5 mil/yr; it is considerably less under operating conditions because of the inhibiting effect of the dissolved fission and corrosion products.[20]

The amount of uranium in a decay tank under normal operating conditions is 1120 g at a concentration of 4.42 g/liter. This concentration is low enough to be critically safe as long as the uranium remains in solution, and the strongly acid solution that will be in the decay tanks precipitation of uranium is unlikely. However, the tanks are sized to be critically safe even if precipitation should occur. The tanks are installed horizontally so that any uranium precipitate will settle uniformly along the length of the tank and will consequently be too low in concentration to sustain a critical reaction. If all the uranium in the tank should precipitate, a linear concentration of 0.14 kg/ft will result; a concentration of 0.98 kg/ft is required for criticality.[21]

UNCLASSIFIED
ORNL-LR-DWG 17194

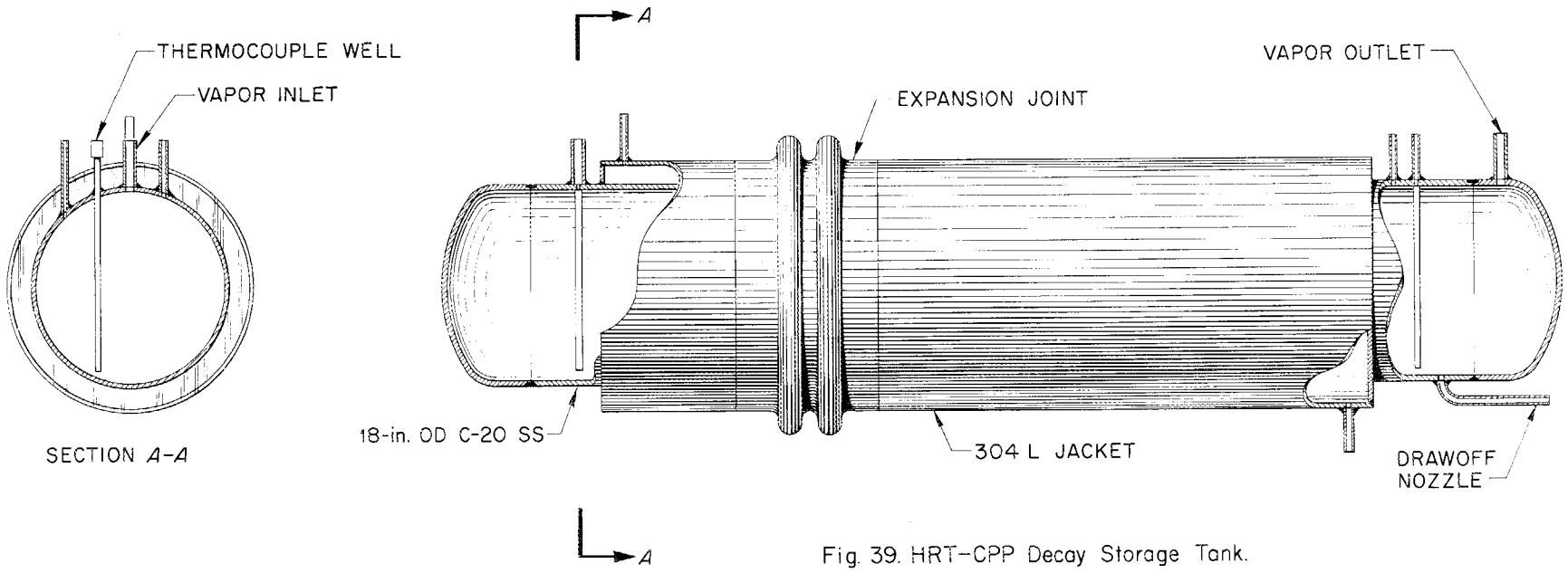

Fig. 39. HRT-CPP Decay Storage Tank.

UNCLASSIFIED
ORNL-LR-DWG 33879

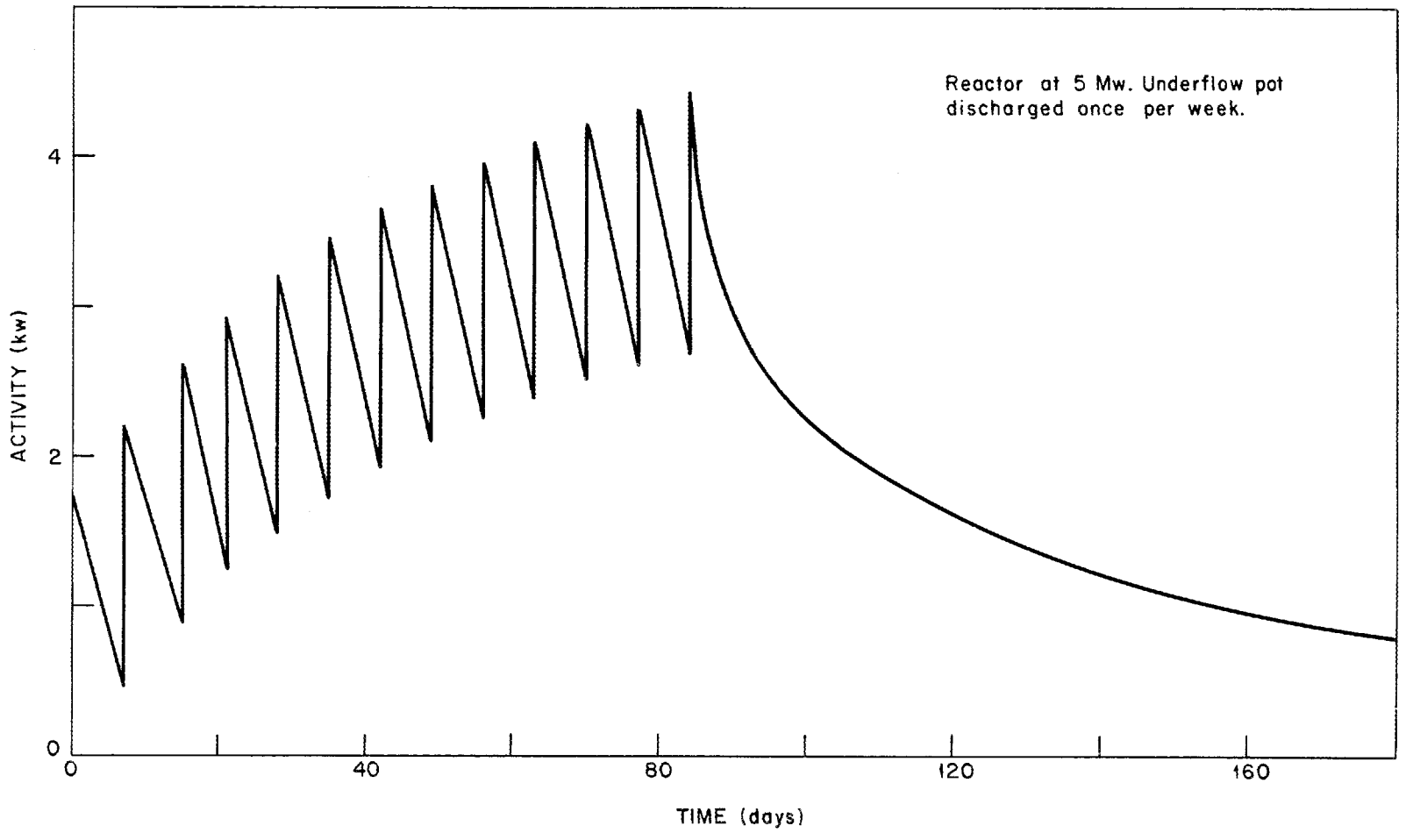

Fig. 40. Activity of Solution in HRT-CPP Decay Tank.

Instrumentation for the tanks consists of a thermowell for measuring solution temperature and a bubbler system for liquid level and density indication. The design and operating conditions are:

Volume	93 gal
Operating volume	0-67 gal
Design pressure	500 psia
Operating pressure	17 psia
Operating temperature	80-220°F
Steam service	10 lb/hr
Cooling water service	2 gpm

Decay Tank Recombiner Loops. There are two identical recombiner loops (Fig. 41), one on each decay tank. Each loop consists of a heater, H-25 and H-27 (Reference Dwg. C-27422), a recombiner, R-1 and R-2 (Reference Dwg. D-27412), and a cooler (Reference Dwg. C-27421). These loops keep the hydrogen concentration in the vapor space of the decay tanks below the explosive limit. The heater and cooler are installed in vertical legs so that a flow of air is set in motion by the difference in density of the air in the two legs and sweeps out the hydrogen. The recombiner recombines the hydrogen in the circulating gas stream flow.

The maximum rate at which hydrogen is produced in a decay tank by the radiolytic decomposition of water is 9.4 liters/hr, which is sufficient to produce an explosive concentration in about 20 min. Boiling the solution in the tanks to dilute and sweep out the hydrogen with water vapor, as is done in the dissolver, is not practical because of the high corrosion rate in the tanks under these conditions.

Heater H-25 is mounted above T-21 and H-27 above T-22. The flow rate of gas through the recombiner loop depends on the temperature to which the air is heated and cooled and on the pressure drop through the loop. This flow rate has been calculated to be about 0.75 ft^3/min for a heater temperature of 240°F and a cooler temperature of 80°F.

Each heater is a 12-ft jacketed length of 1-in. pipe. Low-pressure steam is used in the jacket. The design and operating conditions are:

Heated surface area	4.0 ft^2
Duty	100 Btu/hr
Operating pressure	17 psia
Operating temperature	250°F
Design pressure	500 psi

Each recombiner is 4 in. dia and about 1 ft long. The catalyst bed is a 4-in. thickness of platinized Yorkmesh held in place with retainer rings. A steam coil in front of the catalyst bed evaporates any moisture that collects in the recombiner. The recombiner is connected to the loop with flanges to facilitate removal and replacement. It is not feasible to seal these lines, so that the unit can be removed underwater without flooding the decay tanks, and it is proposed that the recombiners be removed with the cell flooded only as high as the recombiner flanges. Unit shielding might be used to reduce radiation exposure. The design and operating conditions are:

Design pressure	500 psi
Operating pressure	17 psi
Operating temperature	300°F

UNCLASSIFIED
ORNL-LR-DWG 33885

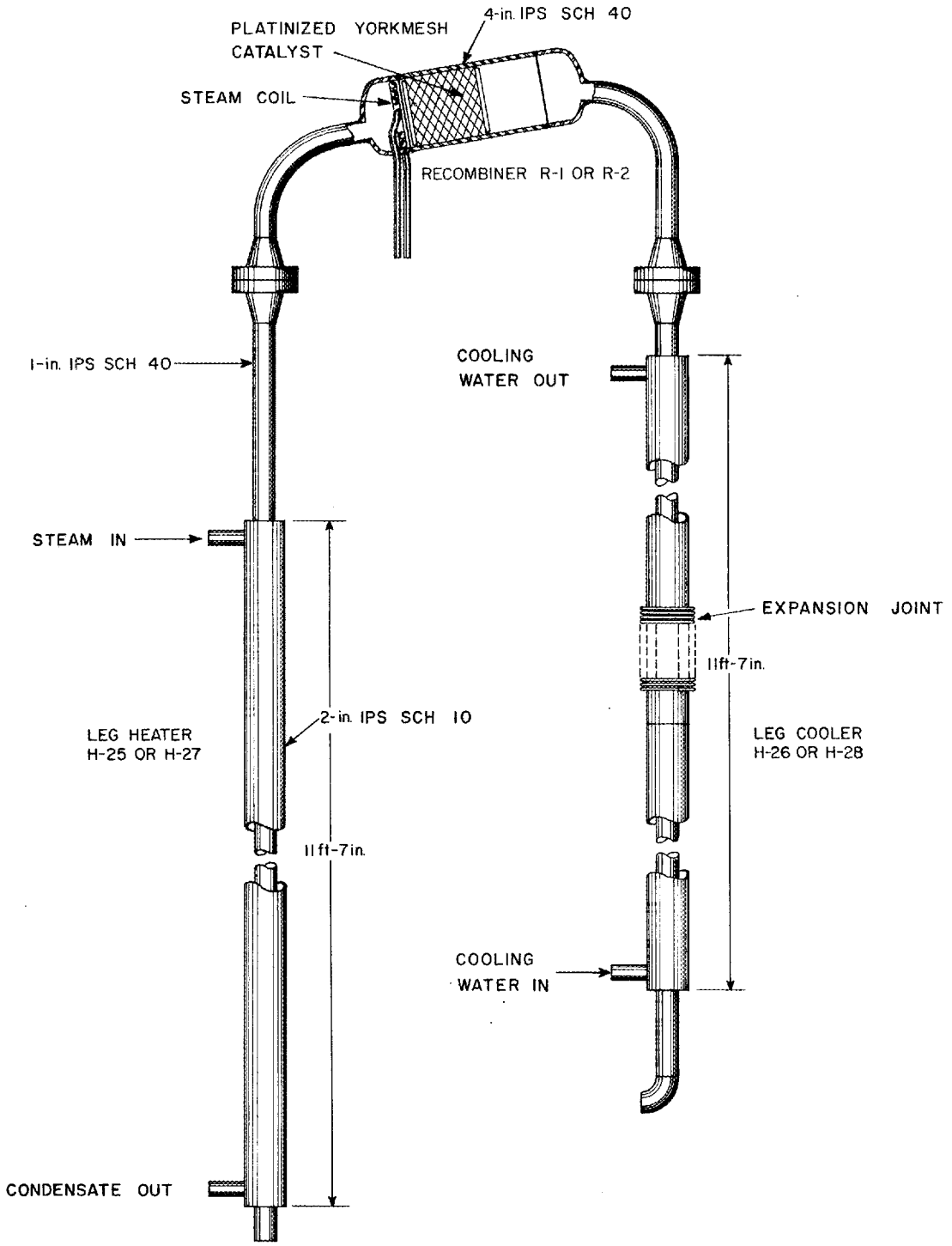

Fig. 41. Recombiner Loop for HRT-CPP Decay Tank.

Cooler H-26 is mounted above T-21 and H-28 above T-22. When the decay tank is being boiled to concentrate its contents it would be undesirable to have these coolers act as reflux condensers. On such occasions, therefore, they are serviced with low-pressure steam instead of cooling water. An expansion joint is provided in the jacket to relieve any thermal stresses which might be caused by a sudden switch from water to steam service or vice versa. The design and operating conditions are:

Design pressure	500 psi
Operating pressure	17 psia
Operating temperature	100°F
Heated surface area	4.0 ft^2
Duty	250 Btu/hr
Cooling water required	0.5 gpm

Decay Tank Seal Pots A-4 and A-5 (Reference Dwg. D-27434). Seal pots A-4 and A-5 (Fig. 42) are identical in construction. They are installed on the vapor lines of T-21 and T-22, respectively. These units prevent transfer of water from one decay tank to the other or from the dissolver to a decay tank by condensation of water vapor in the decay tank. The seal pots are short sections of 3-in. pipe with a jacket for cooling water.

When the dissolver or a decay tank is being boiled the water vapor goes to the entrainment separator and to the condenser or along any alternative path where the resistance to flow is less, i.e., to whichever decay tank was not being boiled at the moment. Here the vapor would condense on the large cooled surface area of the tank, and the net effect would be that considerably more vapor would be condensed in the decay tank than in the condenser. The seal pots act as a one-way seal. Water vapor condenses in the pot and forms a seal which stops any back flow of vapor to the decay tank. When the decay tank to which the seal pot is connected is boiled, the vapor passes through the seal pot with relatively little condensation. The design and operating conditions are:

Design pressure	500 psia
Operating pressure	17 psia
Operating temperature	100-220°F
Operating volume	20 $in.^3$
Cooling water required	1 gpm

Condensate Catch Tank T-25 (Reference Dwg. D-27404). In the condensate catch tank (Fig. 43) the condensate from the dissolver and the decay tanks is temporarily stored until it is convenient to transfer it (by steam jet) to the 12,000-gal waste storage tank outside the cell. The tank receives about 3 gal of water per week from the dissolver and, at irregular intervals, 65 gal of water every 6 months from each decay tank. The catch tank will be emptied on an average of once a month.

The catch tank is a 51-gal stainless steel vessel 12 in. dia and 9 ft long. It is installed at a slight angle to facilitate emptying. A thermal level probe is provided to alarm when the condensate volume reaches 40 gal. The design and operating conditions are:

UNCLASSIFIED
ORNL-LR-DWG 33883

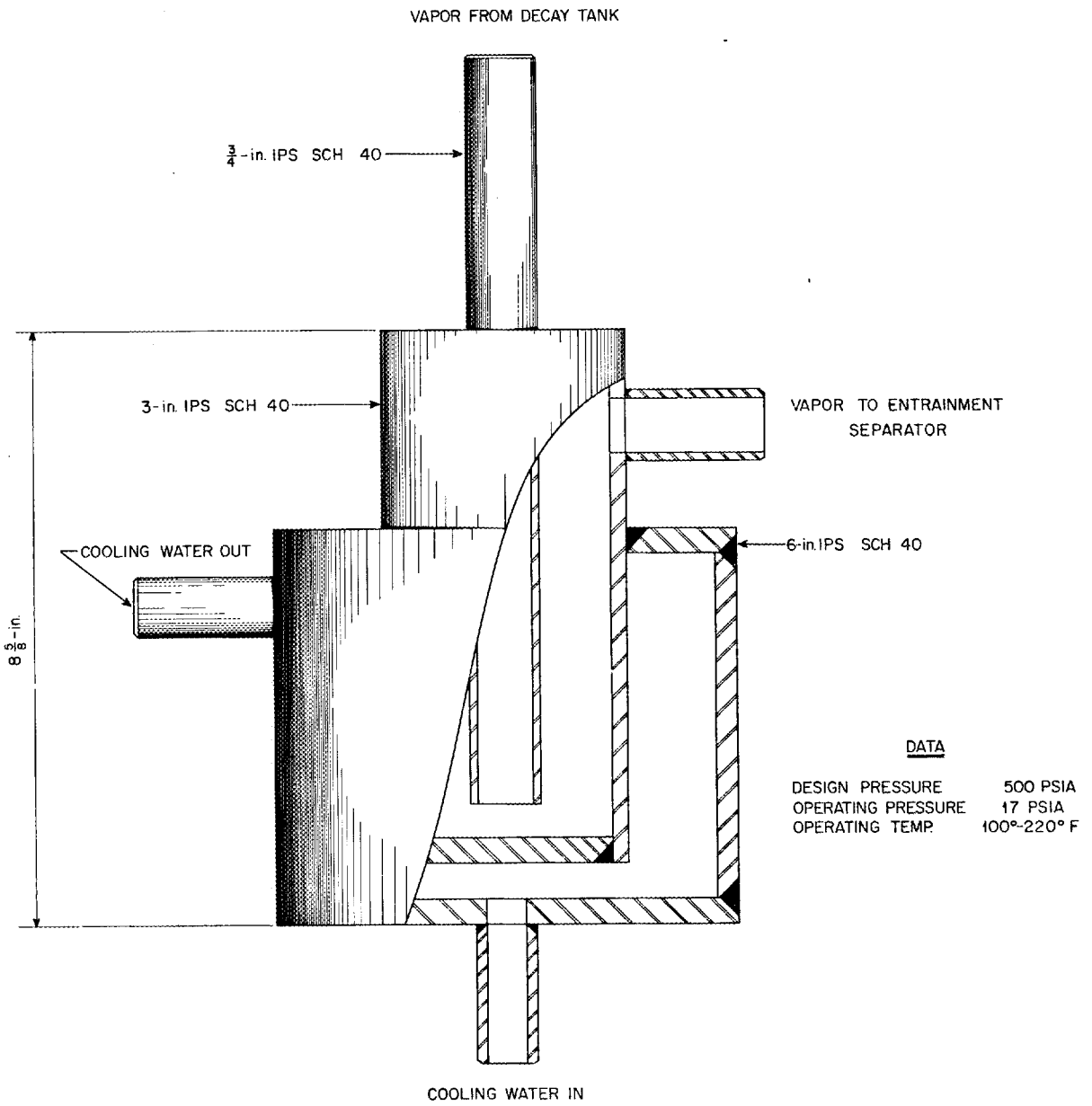

Fig. 42. HRT-CPP Decay Tank Seal Pots A-4, A-5.

UNCLASSIFIED
ORNL-LR-DWG 33884

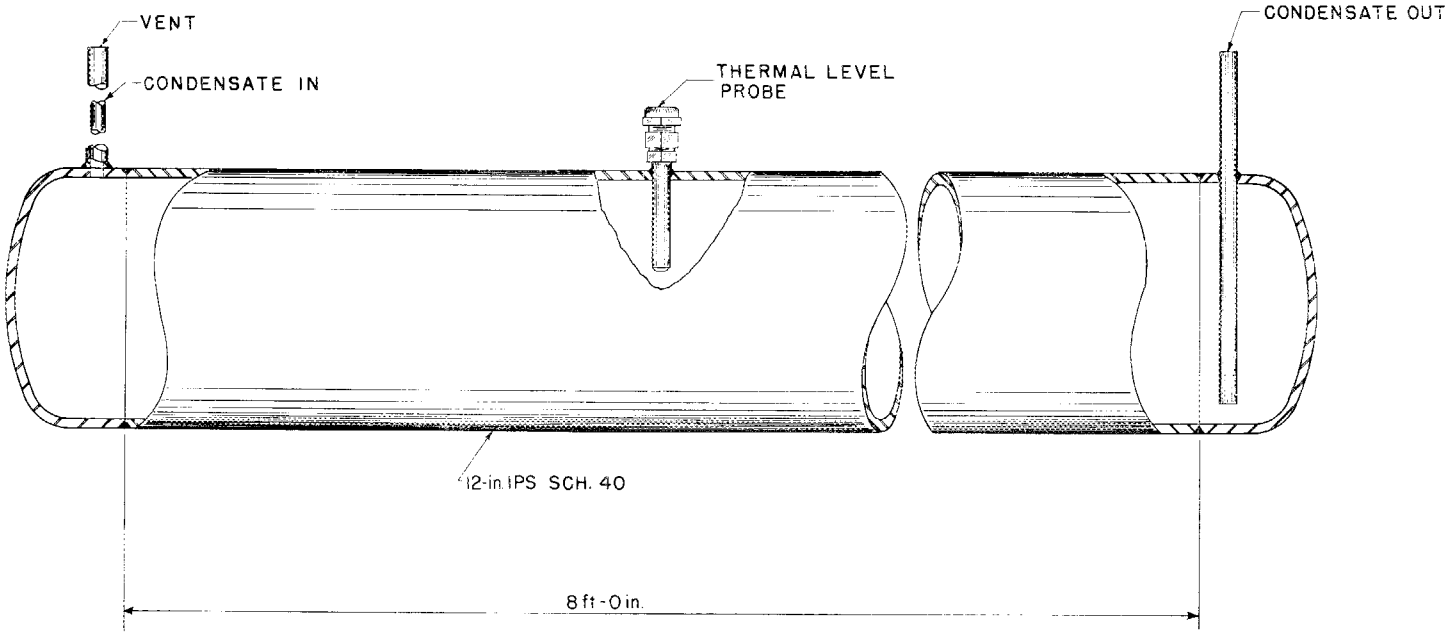

Fig. 43. HRT-CPP Condensate Catch Tank, T-25.

Design pressure	500 psia
Operating pressure	17 psia
Operating temperature	100°F
Operating volume	0-40 gal
Total volume	50.8 gal

Transfer Tank T-27 (Reference Dwg. D-27424). The transfer tank (Fig. 44) is used to pressurize solution from the decay tank to the carrier outside the cell in relatively small batches, thereby averting the danger of overfilling the carrier. Pressurizing is accomplished by closing the vents to the transfer tank, boiling the solution in the tank, and allowing the steam pressure to force the solution through a cooler (H-23) to the carrier.

The transfer tank is a 5-1/2 gal Carpenter-20 stainless steel vessel 6 in. dia and 3 ft 9 in. long. A well at one end of the tank serves as a low point and thus minimizes holdup between transfers. An expansion joint on the steam jacket relieves thermal stresses. A thermowell is also installed. The design and operating conditions are:

Design pressure	500 psia
Operating pressure	30 psia
Operating temperature	250°F
Operating volume	5.5 gal
Total volume	5.5 gal

Waste Cooler H-23 (Reference Dwg. C-27435). The waste cooler (Fig. 45) is installed on the line between the transfer tank T-27 and the carrier C-4. It cools the solution being transferred to reduce the corrosion rate and to simplify carrier handling problems.

The cooler is an 8-ft 8-in. length of jacketed 1/2-in. Carpenter-20 stainless steel pipe. The heat transfer surface is sufficient to cool the solution from 245°F to about 140°F if the solution flow rate is restricted to 0.6 gpm. This restricting can best be done with the valves in the waste loading pit. The design and operating conditions are:

Design pressure	500 psia
Operating pressure	30 psia
Operating temperature	140-250°F
Duty	32,000 Btu/hr
Heat transfer area	2.0 ft^2
Cooling water required	4.2 gpm

6.0 OFF-GAS SYSTEM

The quantity of gaseous fission products given off by the solution in the chemical plant is quite small compared to the amount given off by the reactor. Even this amount is too high to be vented directly to the atmosphere, however, and an off-gas system similar to that for the reactor off-gas is required. This system consists of cold traps to decrease the water content of the outgoing gas to as low a value as practicable, a charcoal adsorber to hold the fission-product gases until they have had time to decay, a seal pot to keep outside air from flowing into the system during any momentary drop in pressure, and a connection to the stack. The off-gas vents for the H_2O and D_2O

UNCLASSIFIED
ORNL-LR-DWG 33882

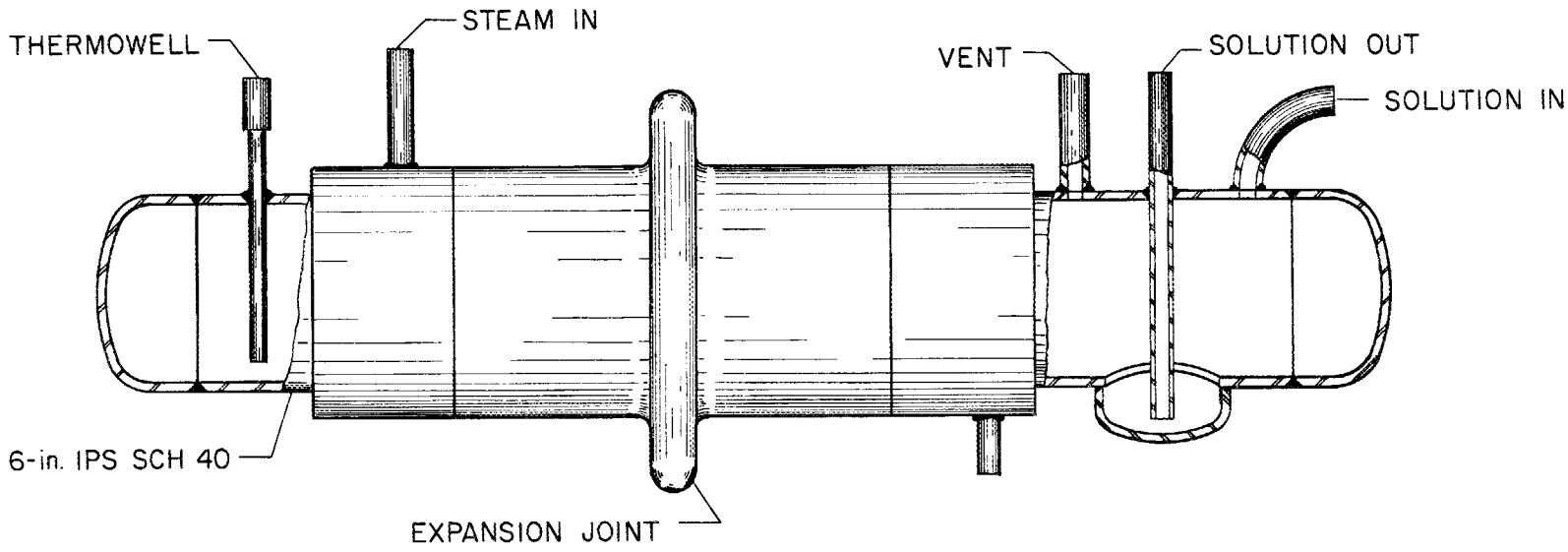

Fig. 44. Transfer Tank, T-27, for Waste from HRT-CPP Decay Tanks.

UNCLASSIFIED
ORNL-LR-DWG 33881

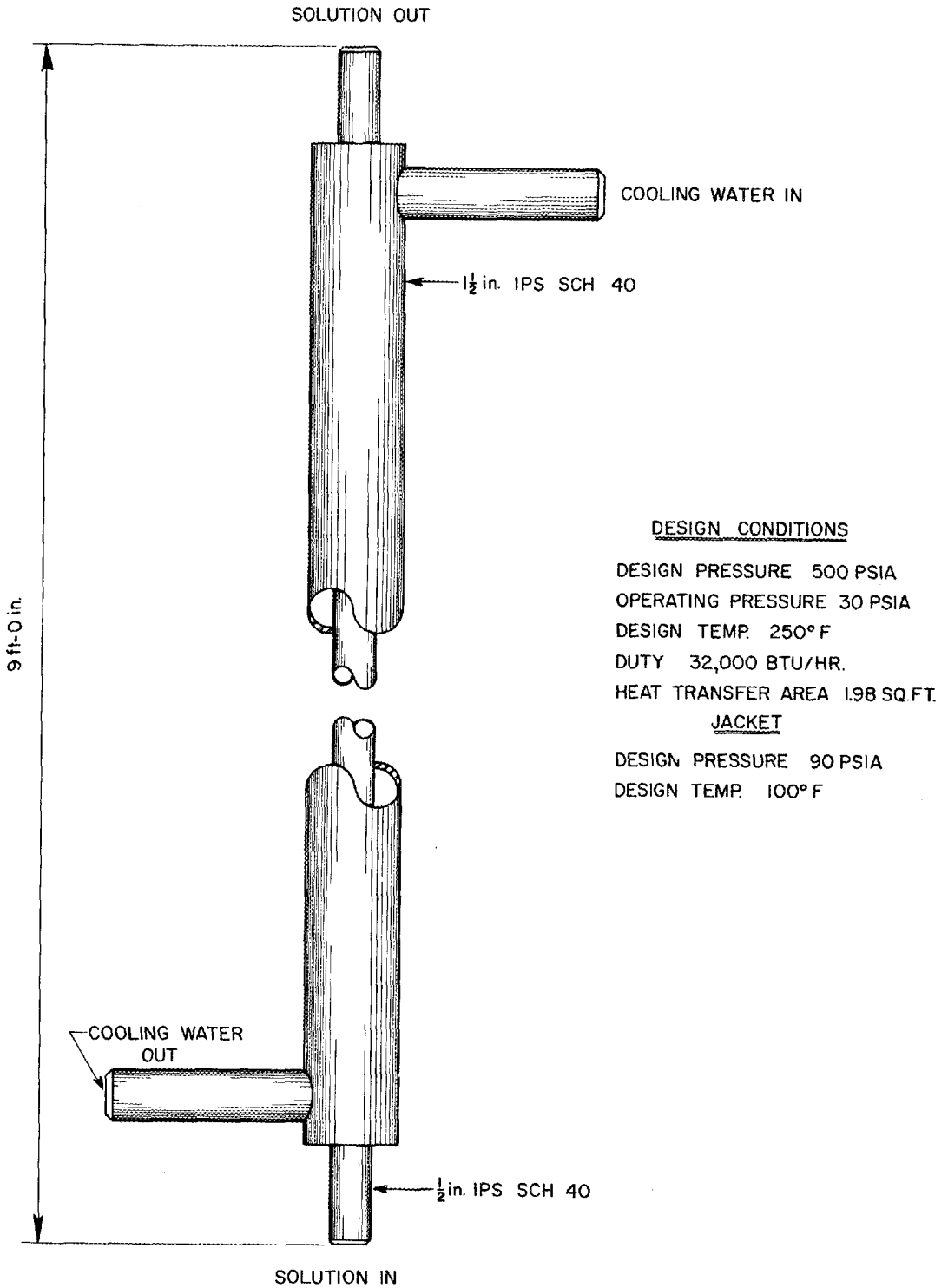

Fig. 45. HRT-CPP Waste Cooler H-23.

systems of the chemical plant are kept separate up to the charcoal adsorber to prevent any contamination of the D_2O inventory with H_2O.

Whenever a solution is boiled in a vessel in the chemical plant, the water vapor generated forces the gas in the vapor space above the vessel out through the off-gas system. Condensation of the water vapor after boiling has been stopped then creates a partial vacuum in the chemical plant system, since the seal pot on the off-gas line prevents atmospheric air from replacing the gas driven off. If the pressure in the chemical plant is not equalized, further operation further decreases the system pressure and quickly makes the system inoperable by reducing the boiling point of the dissolver solution to too low a temperature for dissolution to occur. It is necessary therefore to add inert gas from outside the cell to keep the pressure in the chemical plant equipment at or slightly above atmospheric.

Cold Traps H-4 and H-18 (Reference Dwg. D-20245). Cold traps H-4 and H-18 are identical; H-4 is on the D_2O system and H-18 on the H_2O system. These units chill the off gas to condense out the water vapor and thus prevent its plugging the charcoal adsorber. The condensed vapor drains back to the chemical plant.

The cold traps (Fig. 46) are 4-ft lengths of jacketed 3/4-in. pipe. The coolant is chilled water at 40°F. A thermocouple measures the temperature of the gas leaving the cold trap. The design and operating conditions are:

Design pressure	500 psia
Operating pressure	17 psia
Operating temperature	40°F
Heat transfer area (inside)	0.22 ft^2

Seal Pots A-1 and A-3 (Reference Dwg. C-27413). Seal pot A-1 in the off-gas line prevents H_2O vapor from getting into the D_2O system and contaminating the D_2O inventory. A-3, in the oxygen addition line, prevents radioactive gas from escaping from the processing plant to an operating area via the oxygen addition system.

The seal pots are made from a 6-in. length of 6-in. pipe. They are half filled with mercury, which supplies the seal. A baffle plate decreases mercury entrainment. The design and operating conditions are:

Design pressure	50 psia
Operating pressure	17 psia
Operating temperature	100°F
Volume	0.75 gpm

Charcoal Adsorber (Reference Dwg. E-24801). The charcoal adsorber is similar to those used for the reactor off-gas. Its function is to adsorb the xenon and krypton from the off-gas and hold them until they decay virtually completely to solid or stable forms.

Pressure Equilization. Oxygen is used as the inert gas which is added (from oxygen cylinders) to the chemical plant system to keep the pressure at the desired level. A control valve allows gas to flow into the vent system in the chemical plant whenever the pressure falls below a pre-set value and shuts off the flow at a somewhat higher pressure. The exact values of these pressures depend on the pressure drop through the chemical plant equipment and will be determined in the field.

UNCLASSIFIED
ORNL-LR-DWG 34595

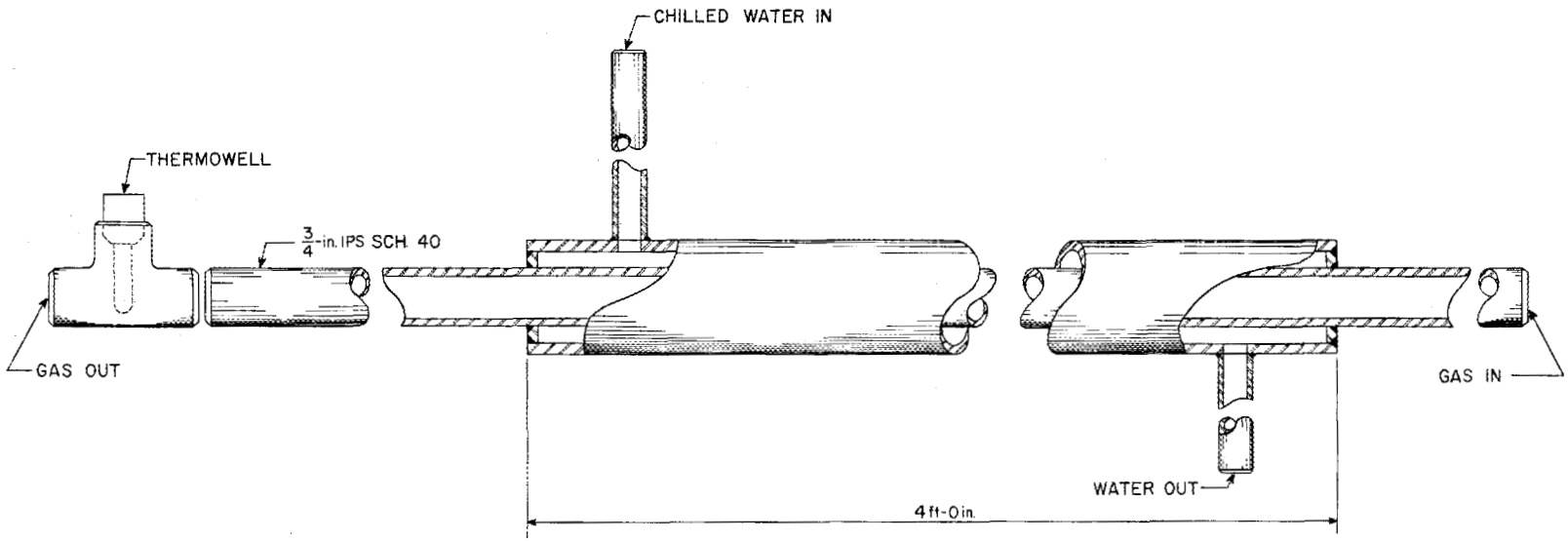

Fig. 46. HRT-CPP Cold Trap H-4, H-18.

Catch Tank A-2 (Reference Dwg. C-27425). Catch tank A-2 is installed upstream and above seal pot A-1. It prevents any flowback of mercury into the processing equipment in the event of a sudden pressure surge downstream. The tank is made from a 6-in. length of 6-in. pipe. Baffle plates decrease mercury entrainment. The design and operating conditions are:

Design pressure	500 psia
Operating pressure	17 psia
Operating temperature	100°F
Volume	0.75 gpm

7.0 WASTE DISPOSAL SYSTEM

The solution discharged from the decay tanks via the transfer tank at 3-month intervals is collected in carrier C-4 (Fig. 47) in the loading pit outside the building. If scheduling difficulties arise and there is no recovery facility available to handle the waste solution at the time, the solution can be stored temporarily in the waste evaporator.

Carrier C-4 (Reference Dwgs. D-30476 through 80). The carrier vessel is 20 in. dia and about 30 in. long and has a capacity of 30 gal. The lead shielding is 9 in. thick on the top and sides and a minimum of 5-1/4 in. thick on the bottom. With this shielding the radiation at the surface of the carrier is calculated to be about 80 mr/hr. Additional shielding is provided for the valves and nozzles on top of the carrier by a removable cap that is placed over these fittings whenever the carrier is out of the loading pit. The total weight of the carrier is 9.3 tons.

Three nozzles are installed on the carrier. One will be used for filling the carrier, one for venting, and the third for emptying the carrier. All three are flanged.

Hydrogen will be evolved from the waste solution at a rate of 0.026 mole/hr, increasing the pressure in the carrier by 0.6 psi/hr.[22] This rate of pressure increase is not deemed high enough to justify the use of a recombining mechanism on the carrier, since the time in transit is not expected to exceed a few hours.

The heat evolved from the waste solution will be about 500 Btu/hr, which will raise the solution temperature by about 2°F per hour if no heat is lost to the surroundings. This temperature rise is considered negligible and no provision has been made for cooling the carrier in transit.

If all uranium remains in solution, the 20- to 25-gal charge to the carrier will not contain a critical mass. No mechanism is known by which uranium would precipitate from a 4 M H_2SO_4 solution; the likelihood of such precipitation is considered remote enough that a critically safe carrier is not required.

The design and operating conditions are:

Design pressure	500 psia
Operating pressure	17 psia
Operating temperature	120°F
Total volume	30 gal
Operating volume	20-25 gal
Weight	9.3 tons

UNCLASSIFIED
ORNL-LR-DWG 34594

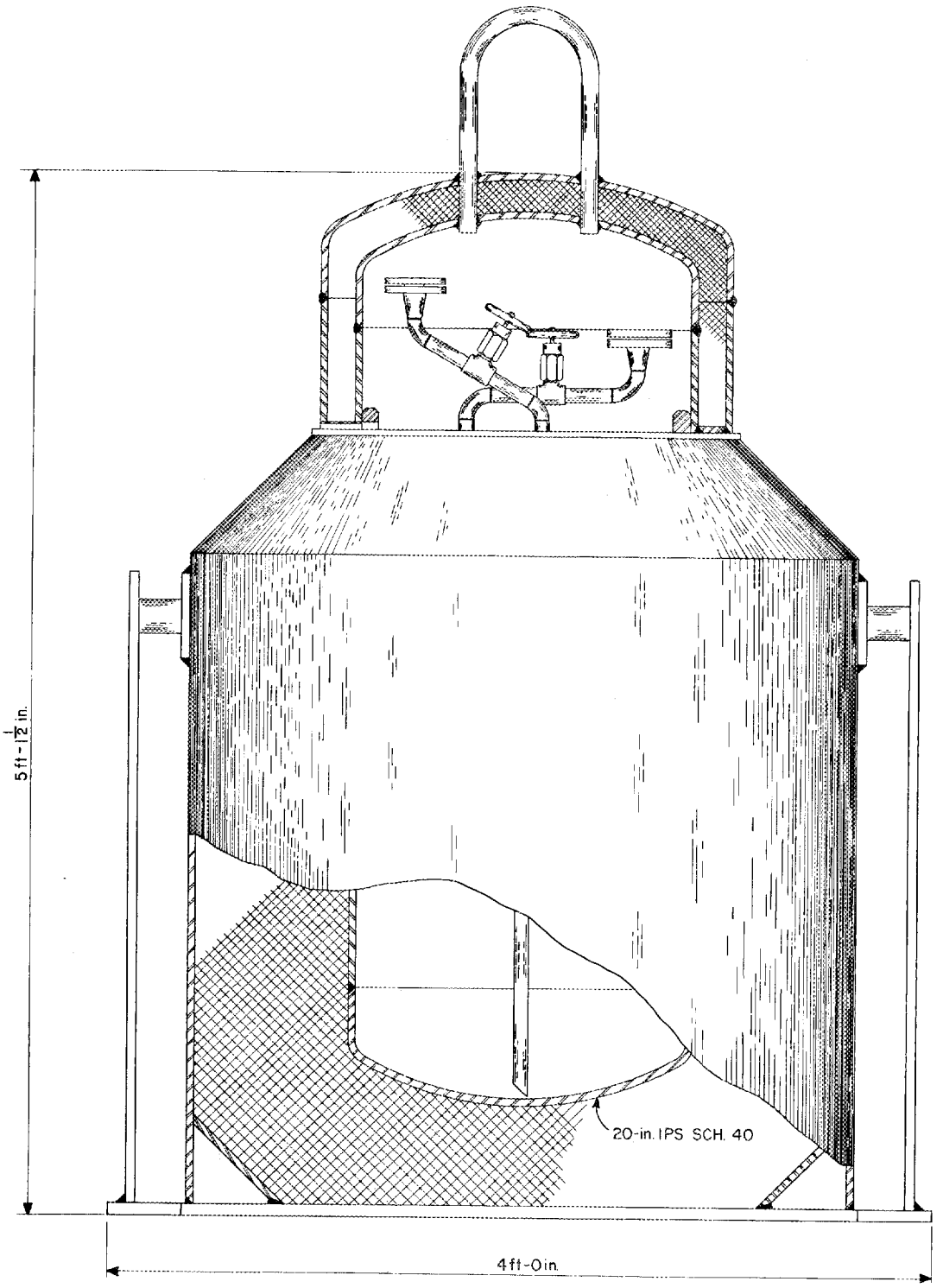

Fig. 47. HRT-CPP Waste Carrier C-4.

Loading Pit (Reference Dwgs. D-20244, D-27453 through 8, D-27460). The carrier is charged with waste solution at the carrier handling facility in the loading pit with the pit flooded to minimize radiation exposure. A trolley device positions the carrier beneath the charging nozzles. The charging lines are sufficiently flexible that the nozzles can be sprung downward to mate with the carrier nozzles. Valves are adjusted from above with long-handled tools. When the transfer has been completed, the charging line is flushed to minimize contamination, valves are closed, and the charging nozzle connections are broken. The trolley can then be cranked back into the original position, a cover lowered into place on the carrier, and the carrier removed from the loading pit. A sketch of this operation is shown in Fig. 48.

Waste Evaporator (Reference Dwgs. D-27459, D-27461 and 2, D-24806). The HRT waste evaporator has been modified so that it can also be used for temporary storage of waste solutions. It is made of 347 stainless steel; corrosion is no problem with reactor wastes and is a problem with chemical plant wastes only if the solution is allowed to exceed 120°F. A cooling coil is wrapped around the vessel to prevent a higher temperature.

The evaporator has a capacity of 190 gal. It is critically safe for any volume of waste solution from the processing plant. Criticality limits for reactor waste solutions are less definite and will have to be estimated for each case. In general, any volume up to 25 gal will be critically safe, since this volume will be held in the 4 in. evaporator legs. Volumes in excess of 25 gal will be critically safe as long as the uranium concentration in the evaporator body does not exceed 0.35 kg per linear foot.

A sampler is installed in a shielded housing outside the waste evaporator shield. Solution is circulated through the sampler by means of an air jet.

Provision is made for an air sweep to periodically purge radiolytic hydrogen from the evaporator. A flow of 15 cfm for 2 min every 8 hr purges either reactor or chemical plant waste solution.

Instrumentation for the waste evaporator includes a bubbler system for level and density measurement and thermocouples for temperature indication.

Extra shielding on the north and west walls of the waste evaporator shield permits handling and storage of more active solutions than was contemplated in the original design. This extra shielding is a 12-in.-thick layer of barytes block stacked inside the shield. Lead bricks are substituted in one area of the west wall where barytes blocks cannot be used because of insufficient clearance.

The process piping in the chemical processing loading pit is so arranged that solution can be charged to the waste evaporator from either the reactor or the chemical processing dump tanks. Solution from the waste evaporator can be discharged to the reactor, the chemical processing dump tanks, or to a carrier in the chemical processing loading pit.

Metering Tank (Reference Dwg. D-27459). The metering tank is a 3-gal tank installed within the waste evaporator shield and connected to the discharge line from the waste evaporator. It provides a means for metering the discharge of waste solution, thereby obviating the danger of overfilling the carrier when the evaporator is being emptied.

UNCLASSIFIED
ORNL-LR-DWG 34596

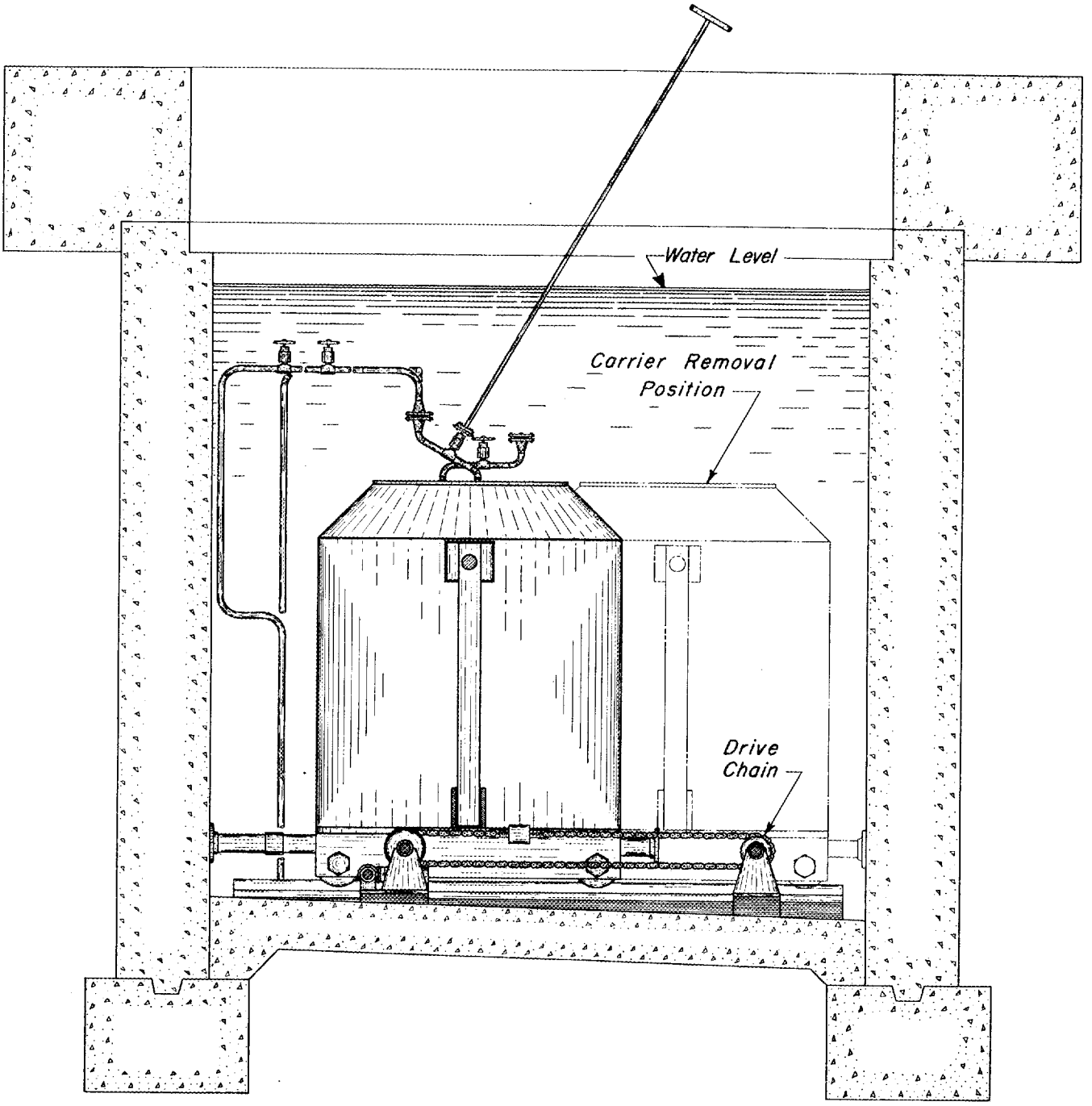

Fig. 48. HRT-CPP Waste Carrier Loading Pit.

The metering tank is 4 ft 6 in. long and 4 in. dia. It is installed horizontally.

8.0 AUXILIARY SERVICES AND EQUIPMENT

8.1 Services

The chemical processing plant is supplied with a number of services---leak detection, cooling water, refrigeration, electrical, instrument air, process air, and steam. The last four are standard and need no elaboration; the cooling water, leak detection, and refrigeration systems, which are unorthodox, are described here in detail.

Leak Detectors (Reference Dwg. D-27447). A leak-detection device (Fig. 49) is installed on every flange on a process line or vessel in the processing plant except the dissolver head flange. When the plant is in operation the space beneath the ring seal of a flanged joint is pressurized to a pressure higher than that used in the process. Any leak in the flange will therefore result in leakage from the leak-detection system either to the process system or into the cell. This leak of leak-detection fluid (D_2O) can easily be detected by a loss in leak-detection system pressure, and corrective action can be taken before the leak becomes bad enough for process solution to leak through the flange.

The system on the high-pressure flanges operates at 2500 psia and that on the low-pressure flanges at 500 psia. The high-pressure system services 28 leak-detector lines (8 are spares) which are grouped on two manifolds. The system is filled with D_2O to a fixed level; the gas space remaining is filled with argon under pressure. The relative volumes of D_2O and argon are such that a loss of 1 cc of D_2O through any flange will cause a 20-psi change in manifold pressure. The low-pressure system services 42 leak-detector lines (4 are spares) which are grouped on three manifolds; A 1-cc D_2O loss will cause a 5-psi change in manifold pressure.

Cooling-water Recirculation System (Reference Dwgs. C-27442, E-27432). This system cools and recirculates up to 50 gpm of demineralized cooling water through the processing plant. The water is pumped from a head tank, T-29, through a cooler, H-29, through the desired process equipment, and back to the head tank (Fig. 50). Potable water is used on a once-through basis to cool the demineralized water. The maximum demineralized water temperature leaving the cooler should not exceed 85°F. In the event of failure of the circulating pump, cooling water for the most urgent process requirements will by-pass the pump, circulate by gravity through the process equipment, and be discharged to the drain. The head tank capacity is sufficient to supply the plant for about an hour. More demineralized water can be added from the storage tank on the roof, and when this supply is exhausted, potable water can be used directly. This closed-cycle cooling-water system is used to avoid the possibility of chloride contamination of the cooling water, which would induce stress corrosion cracking in process equipment.

Tank T-29 is 3 ft 6 in. dia and 3 ft 10 in. high with a capacity of 350 gal. Two gage glasses provide level indication. A pressure switch is used to give a low-level alarm. The pump, P-29, is a Worthington pump with a maximum capacity of 50 gpm. Cooler H-29 is a shell-and-tube heat exchanger with a heat transfer surface of 112 ft^2.

UNCLASSIFIED
ORNL-LR-DWG 34597

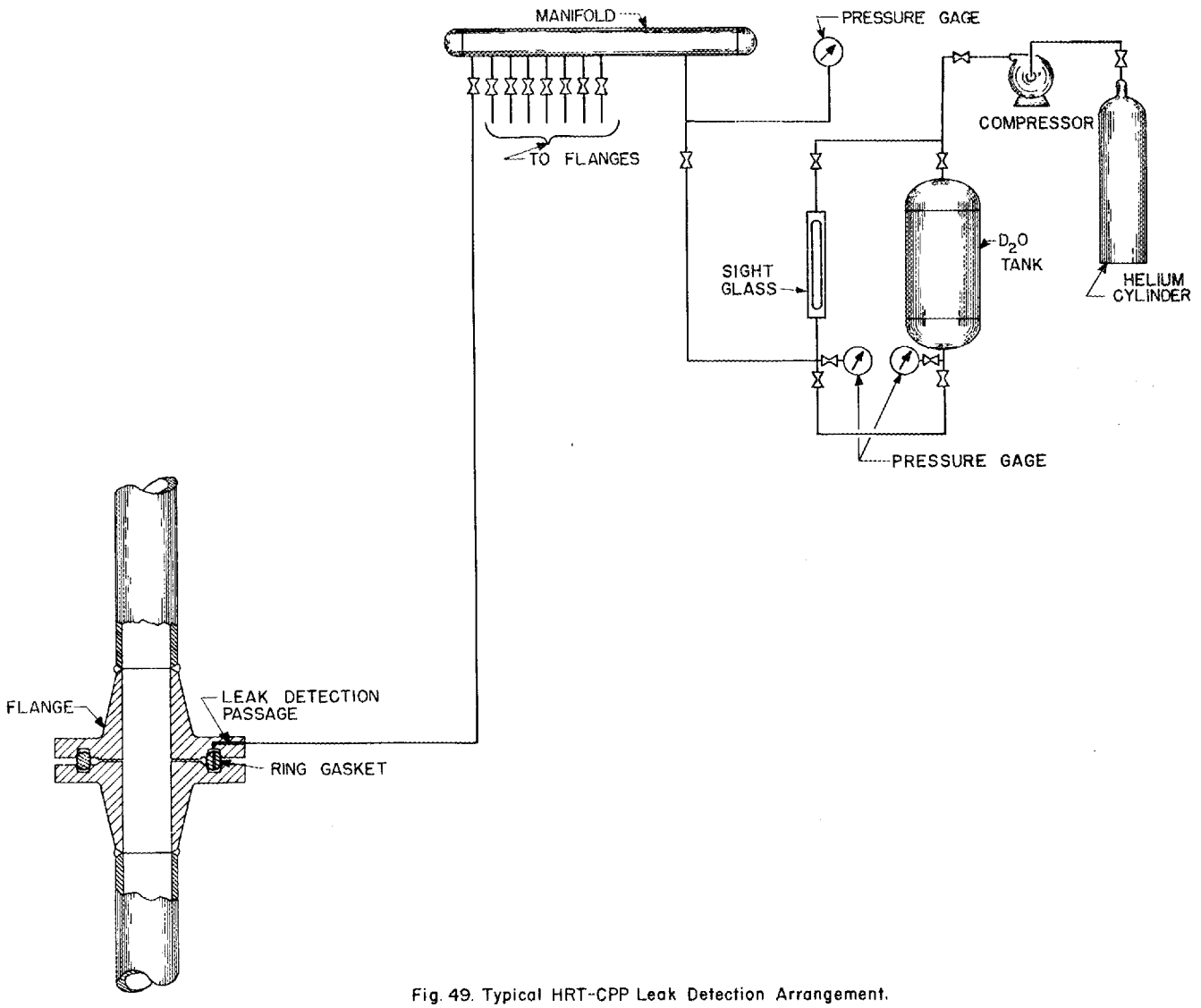

Fig. 49. Typical HRT-CPP Leak Detection Arrangement.

UNCLASSIFIED
ORNL-LR-DWG 34598

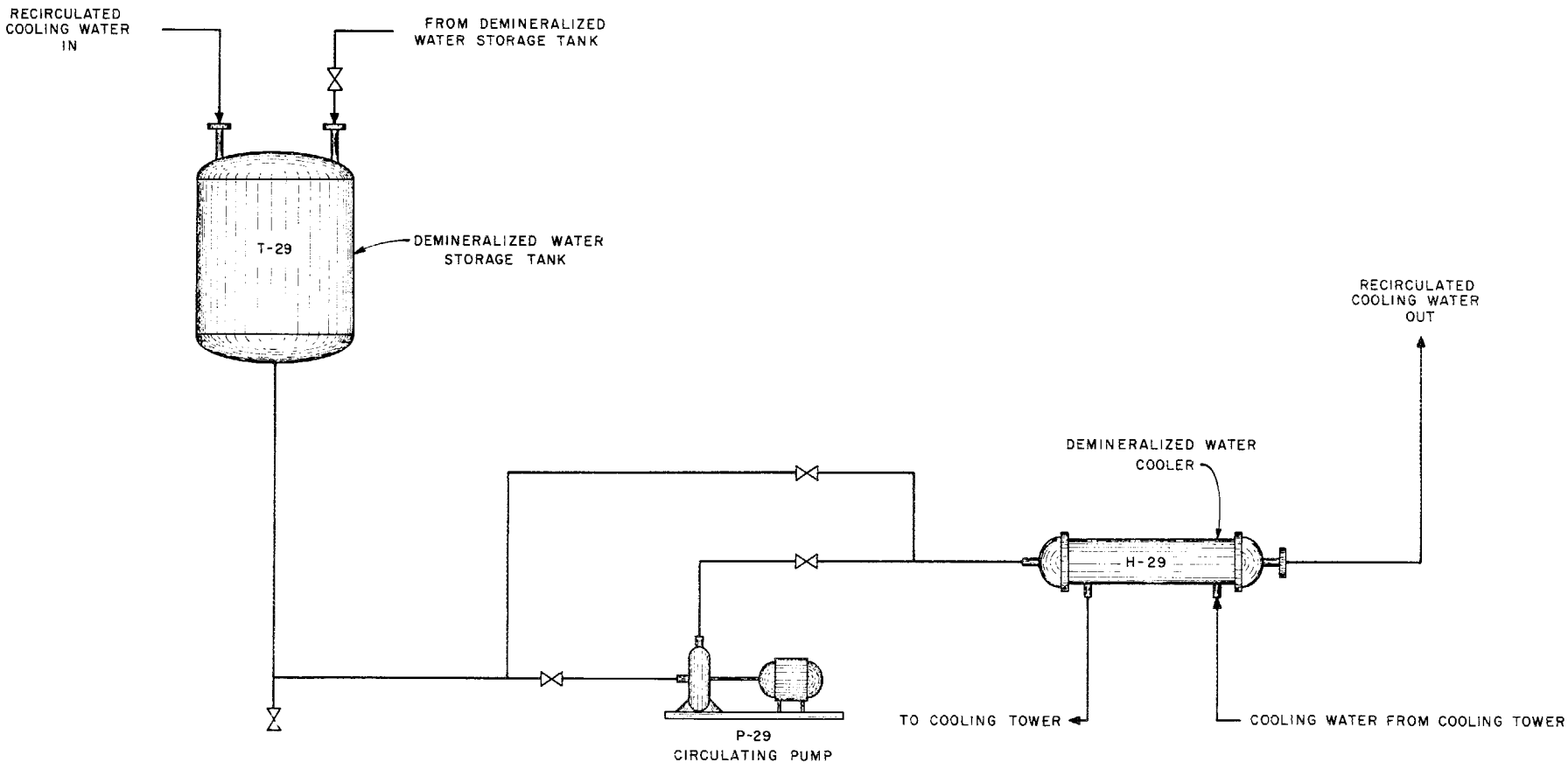

Fig. 50. HRT-CPP Cooling Water Recirculation System.

Freeze Plugs (Reference Dwg. D-25073). Freeze plugs are used in the processing plant, instead of valves, to seal process lines and stop leakage through valves. A freeze plug is formed in a length of process line wrapped with tubing (Fig. 51) through which refrigerant at -40°F is circulated. The process line can be reopened by shutting off the flow of refrigerant and allowing the plug to thaw. The refrigerant is Freon-11 cooled to operating temperature by a primary refrigeration system outside the processing cell.

In the processing plant a freeze plug coil is installed adjacent to every high-pressure valve to ensure against discharge of process solution into the low-pressure system in the event of valve failure and also to prevent minor leakage, which would tend to erode the valve seat. In the low-pressure system freeze plug coils are installed adjacent to the valves on the dissolver to ensure against leakage through these valves and subsequent cross-contamination of the H_2O and D_2O systems. In both systems freeze plugs are used as a substitute for shut-off valves wherever the process solution flow can be halted long enough to freeze a plug.

In addition to their use in process control, freeze plugs are formed in the line on both sides of equipment to be removed to minimize contamination of process equipment with shield water. Where access is easy, portable freeze plug coils are used; where access is difficult, coils are installed but left unconnected to the refrigeration system until needed.

Refrigeration System (Reference Dwg. D-27448). The refrigeration system cools and recirculates refrigerant to the various freeze plug coils. Up to 20 gpm of Freon-11 at -35°F may be supplied. The system consists of a refrigeration unit, a head tank, and two circulating pumps.

The refrigeration unit is a Tenny "Koldpak" unit with an estimated capacity of 18,000 Btu/hr at -40°F. Freon-22 is used to condense Freon-13 which, in turn, cools the Freon-11. This complex system is used to avoid the necessity of having an expansion valve inside the process cell, where it would be relatively inaccessible. The system has demonstrated the ability to hold frozen a dozen or more freeze plugs.

The head tank is a 30-gal reservoir for Freon-11 which is stored at -35°F. A float-type level switch is installed so that a low freon level will sound an alarm and close the valves to the various freeze plug coils in the processing cell. A temperature switch is installed to alarm at a Freon temperature of -10°F or above. A 50-psig rupture disk is also installed.

Two 25-gpm circulating pumps are installed in parallel, with only one operating at any given time. Whenever the pump discharge pressure falls below 65 psig a pressure switch automatically starts the idle pump and cuts off the other pump.

Two types of control are provided for the Freon flow to the freeze plug coils. Freeze plugs that are well insulated and will thaw fairly slowly are connected to an automatic thermocouple scanner that, when the plugs are frozen, reads the temperature at each plug once every 4 min and shuts off the Freon flow if the temperature is below -25°F or turns on the Freon flow if the temperature is above -15°F. This system is provided with a manual cut-out. The Freon flow to freeze plug coils that are not connected to the scanner is controlled manually from the control room.

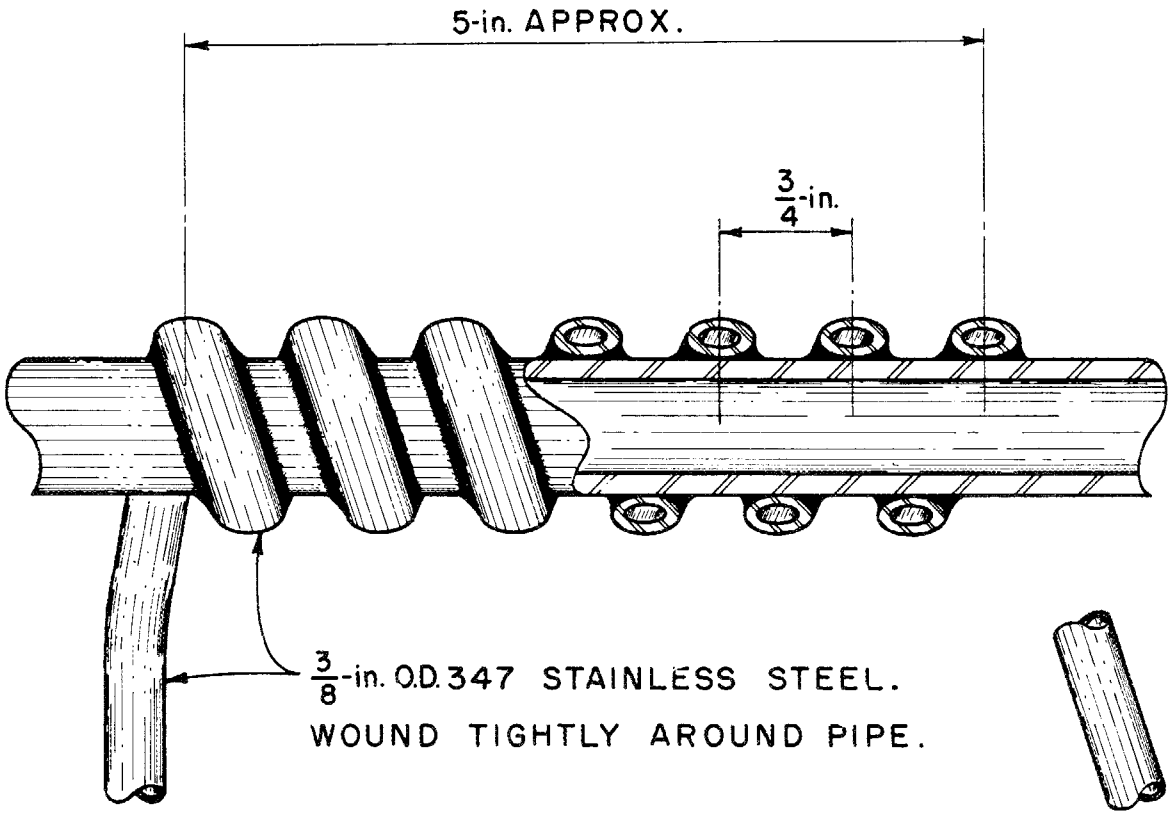

Fig. 51. HRT-CPP Permanent Freeze Plug - Type A.

Chilled Water Recirculation System T-30, P-30, and H-13 (Reference Dwgs. C-27443, D-27450. This system supplies 1/2 gpm of chilled water at 40°F to the cold traps H-4 and H-18. The system consists of a surge tank, T-30, a circulating pump, P-30, and a heat exchanger, H-13, where the circulating water is cooled with refrigerant. The tank is a 3.4-gal tank 6 in. dia and 2 ft 7 in. long. A gage glass is installed for level indication. The water cooler is a 1.9-gal tank filled with refrigerant. The water circulates through a coil immersed in the tank. The temperature of the water leaving the tank is controlled by an on-off control of the flow of refrigerant to the tank, which regulates the temperature of the tank within narrow limits.

Space Cooler. The space cooler removes from the cell the heat given off by the process equipment and keeps the cell temperature at or below 140°F. The unit consists of a fan to induce circulation and a cooler rated at 35,000 Btu/hr at 0.5 atm.

Air, Steam, and Electrical Supply. Instrument air at 80 to 100 psig is supplied from the same compressor and drier that supply the reactor. In the event of compressor failure, an emergency supply will be maintained from cylinders.

Both 100- and 250-psi steam are available from building headers.

Available a-c electric circuits include 115-, 230-, and 480-volt. A 24-volt d-c circuit is also provided for use in various relays.

8.2 Instrumentation

Much of the instrumentation for the HRT processing plant is subject to more stringent conditions than are encountered in the normal radiochemical processing plant. These conditions and other considerations, such as inaccessibility of instruments under operating conditions and protection of personnel, have severely restricted the type of instrumentation that could be provided.

The primary instrument elements are mounted inside the process cell so that connections between the process piping and the primary element will not need to be brought into an operating area. In addition, electrical transmission of the signal from the primary element is predominantly used instead of pneumatic transmission to eliminate the necessity for open lines between the process cell and an operating area and to reduce the amount of maintenance required. The level indicators on the dissolver and decay tanks are exceptions; more desirable types of level-measuring devices simply would not function in this application.

Measurement of pressure, level, temperature, flow, radiation, and density are necessary for proper operation of the processing plant. Each of these is summarized here; a detailed description is given in the Instrumentation Design Report.[23]

Pressure Measurement. Pressure is measured in the high-pressure loop, each recombiner condenser loop, the dissolver, the transfer tank, and each sampler; the differential pressure drop across the hydroclone is also measured.

The primary pressure elements for the high-pressure loop, the recombiner condenser loops, the dissolver, and the transfer tank are located in a lead-shielded

watertight cubicle near the top of the process cell. A length of 1/8-in. pipe filled with D_2O is provided to prevent process solution from coming in contact with the primary elements. The pressure in the high-pressure loop is measured by a 0- to 2500-psi Baldwin-Lima-Hamilton Corp. type SR-4 strain-gage element. The other pressures are measured by 0- to 50-psi elements of the same type.

The primary pressure elements for the samplers are located in the respective sampler cubicles. A Foxboro special inductive d/p cell evacuated to read absolute pressure is used.

The pressure drop across the hydroclone is measured by a 0- to 50-psi Foxboro differential pressure cell mounted in the shielded instrument cubicle.

Level and Density Measurement. Level is measured in the D_2O storage tank, the dissolver, the decay tanks, and the condensate catch tank. Density is measured in the two decay tanks. A miscellany of sensing devices is used--- a weigh cell, a thermal level probe, and a bubbler system.

The primary measurement of the level in the D_2O storage tank is by means of a 0- to 200-lb Baldwin-Lima-Hamilton Corp. type SR-4 load cell. The tare weight of the tank (about 150 lb) is compensated for in the electrical circuit of the transducer. This type of standard tank weighing device is normally not used where the active weight is less than half the total weight; it is used here, where it is about one-fourth the total weight, only because other level-sensing devices had more serious disadvantages. Possible inaccuracies in the readings of the weigh cell can be checked during operation by a pneumatic device which can load and unload 25-lb weights (Reference Dwgs. Q-1671-83 through 86). A further check is provided by a supplementary measurement of the D_2O level by a thermal-level probe (Fig. 52) developed by the Instrumentation and Controls Division. The probe consists of a heater surrounded by thermocouples embedded in a stainless steel housing and spaced at equal distances along the length of the probe. Since the heat transfer coefficient is better from the probe to the liquid that it is from the probe to the vapor, heat will be transferred more rapidly to the liquid phase, and the temperature in this part of the probe will be lower than in the part of the probe in contact with the vapor phase.

A modified type of thermal level probe is used on the condensate catch tank. Here the probe is used as a high-level alarm only.

Liquid level in the dissolver and the decay tanks is measured by a bubbler system. This system of level indication has been avoided where possible in the processing plant because of the hazard involved in having open lines leading from process vessels to an operating area and to avoid overloading the off-gas system with bubbler gas. For the dissolver and the decay tanks, however, other methods of measurement were ruled out on various grounds and a bubbler system was adopted out of necessity. Special precautions have been taken to reduce the hazard and the volume of off-gas. The lines are valved off except for the 60 sec when a level measurement is being taken, and back-up gas flow out the bubbler line during the interval the lines are open is prevented by a radiation monitor which valves off the lines where any radiation is detected. In the two decay tanks the level measurement is supplemented with a density measurement. This measurement is not taken on the dissolver because the need for a density reading was not great enough to justify an additional tantalum dip line.

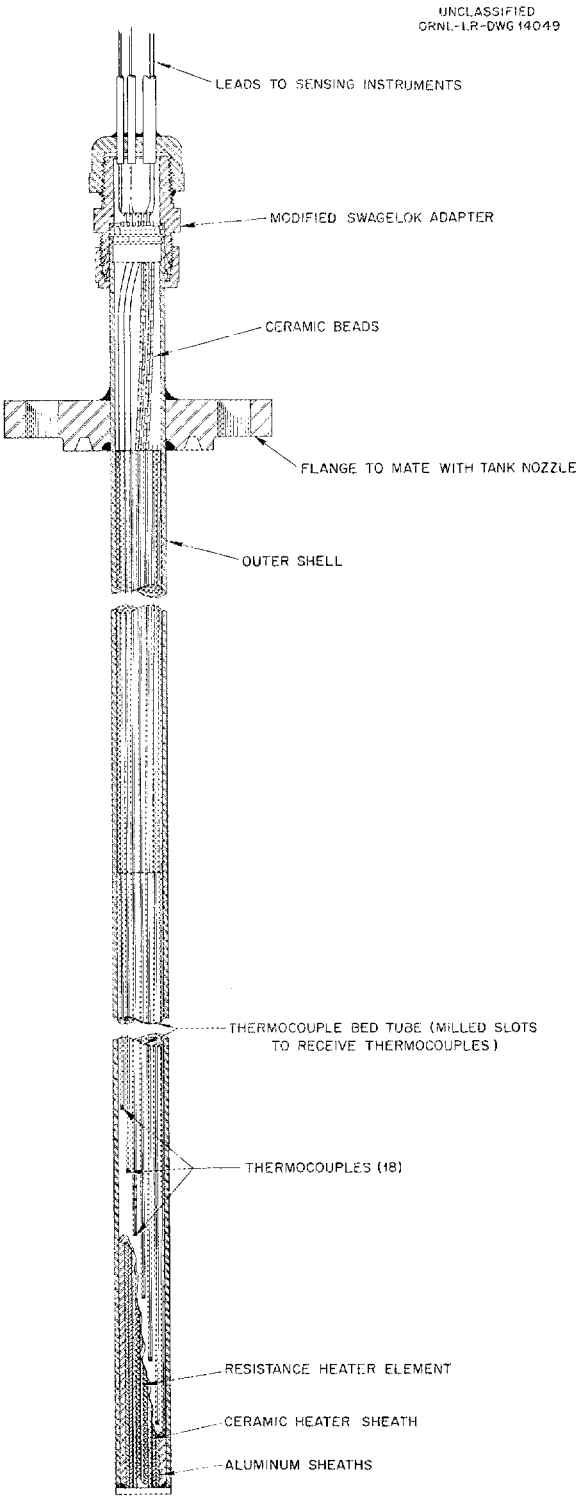

Fig. 52. Thermal Level Probe for HRT-CPP D_2O Storage Tank.

Flow-Measurement. Vapor flow is measured in each recombiner condenser loop by a turbine-type flow element. These elements are installed in the connecting line between the recombiner and the condenser and are cooled to permit operation at the 300°F process temperature.

Temperature Measurement. Temperature is measured at numerous points in the process. Chromel-alumel thermocouples insulated with Fiberglas are used in all cases. The elements are sheathed in 1/8-in.-o.d. type 304 stainless steel tubing. Duplicate thermocouples are used at each temperature-measuring point.

Radiation Measurement. A ten-channel radiation monitoring unit serves the processing plant. Individual ion chamber detection heads monitor the cell air, bubbler lines, steam condensate leaving the cell, cooling water leaving the cell, cooling water from the space cooler, and tanks T-11 and T-26. Each detection head is instrumented to alarm at excessive radiation.

RE-cell-1 monitors the air in the process cell. It is mounted in cell D; a small blower continuously circulates air from the process cell past the unit. A high radiation level automatically cuts off the cell vacuum pump and actuates an alarm.

RE-T-12 and RE-1454 monitor, respectively, the steam condensate and the cooling water leaving the process cell. A high radiation level at either monitor automatically shuts valves on all steam lines entering and leaving the process cell and all water lines leaving the cell except those from the space cooler and cold traps.

RE-L monitors the air lines of the bubbler level system for the dissolver and the decay tanks. A high radiation level in these lines or the dissolving solution addition line automatically shuts valves in the bubbler lines.

RE-T-26 monitors the dissolving solution addition line and RE-T-11 the fuel addition lines. A high radiation level automatically closes valves in these lines.

RE-1458 monitors the cooling water for the space cooler. A high radiation level automatically shuts a valve in the discharge line.

Electrical and Instrument Connections. The stainless steel--sheathed thermocouple lines terminate in tubing fittings at a sealed junction box in the process cell near the roof plugs. Wiring from these junction boxes passes through sealing boxes in the operating cell filled with a sealing compound. The conduit between the sealing boxes and the junction boxes inside the processing cell are pressurized with air during maintenance operations, when the cell is flooded.

Electrical leads from the process cell pass through sealing boxes inside the process and the operating cells. The conduits between the two sealing boxes are pressurized.

8.3 Valves

There are three principal types of valves in the chemical processing cell: a 1/8-in. high-pressure valve, a 1/8-in. sampler valve, and a 1/2-in. low-pressure

valve (Figs. 53-55). All these valves are bellows-sealed and are adaptable to handwheel operation or air bellows motor actuation.

The 1/8-in. high-pressure valve and the 1/8-in. sampler valve have a valve body and bellows made of 347 stainless steel. The seat is integral with the body and is also made of 347 stainless steel; the plugs are Stellite No. 6.

The 1/2-in. low-pressure valves that are likely to be in contact with the dissolver solution have a valve body, bellows and plug made of Carpenter-20 stainless steel. The seat is replaceable and is made of Hastelloy. The other 1/2-in. low-pressure valves have a valve body and bellows made of 347 stainless steel; the seat is Stellite No. 12 and the plug Stellite No. 6.

The bellows seal on the shaft is backed up by an ordinary packing gland designed to prevent gross leakage if the bellows should fail.

8.4 Tools

Underwater maintenance of the processing plant requires the use of a number of special tools. Some of these tools are used in both the reactor and the processing plant, but some, because of special requirements, are unique to the processing plant. The tools for common usage include portable freeze plugs, a TV underwater camera, viewing boxes, a flange spreader, mirrors, a thermocouple and power lead-disconnect tool, underwater lamps, and an air-driven hacksaw. The tools for exclusive processing plant use include four tools for removing the hydroclone, six tools for making or breaking flanges, and two miscellaneous tools.

Three special tools were built for use in replacing the hydroclone without flooding the high-pressure process piping with shield water: a hydroclone removal tool, a hydroclone access standpipe, and a hydroclone retainer plug removal tool (Figs. 56-58). The blind flange above the hydroclone is removed first (Fig. 59). A retaining plug mounted above the hydroclone in the hydroclone flange keeps the shield water out of the process piping. The hydroclone access standpipe is bolted to the hydroclone flange and the shield water in the standpipe is pumped out through the discharge line by pressurizing the standpipe with air. The standpipe is then filled with D_2O to provide shielding, and the retainer plug is removed from the hydroclone flange by grappling it through the standpipe with the retainer plug removal tool. The hydroclone is next engaged and removed with the hydroclone removal tool. The procedure for replacing the hydroclone is the reverse of the procedure for removing it.

A vertical wrench tool (Fig. 60) is used for loosening and tightening the bolts on vertically mounted flanges. The bolts are removed and replaced with a magnet at the end of a long handle. An adaptation to enable the vertical wrench to be used to remove and replace the bolts seriously weakened the bolt sockets and was discarded.

A right-angle starting wrench (Fig. 61) and a right-angle drive wrench (Fig. 62) are used to break and remove horizontally-mounted flanges. The starting wrench is used to start the bolts in making horizontal flanges on P-1, H-3, F-1, and T-1-2, and, because of difficult accessibility, is used to break the horizontal flanges on P-1. The drive wrench is used to finish making the horizontal flanges and to break all horizontal flanges except those on P-1. A pneumatic right-angle wrench

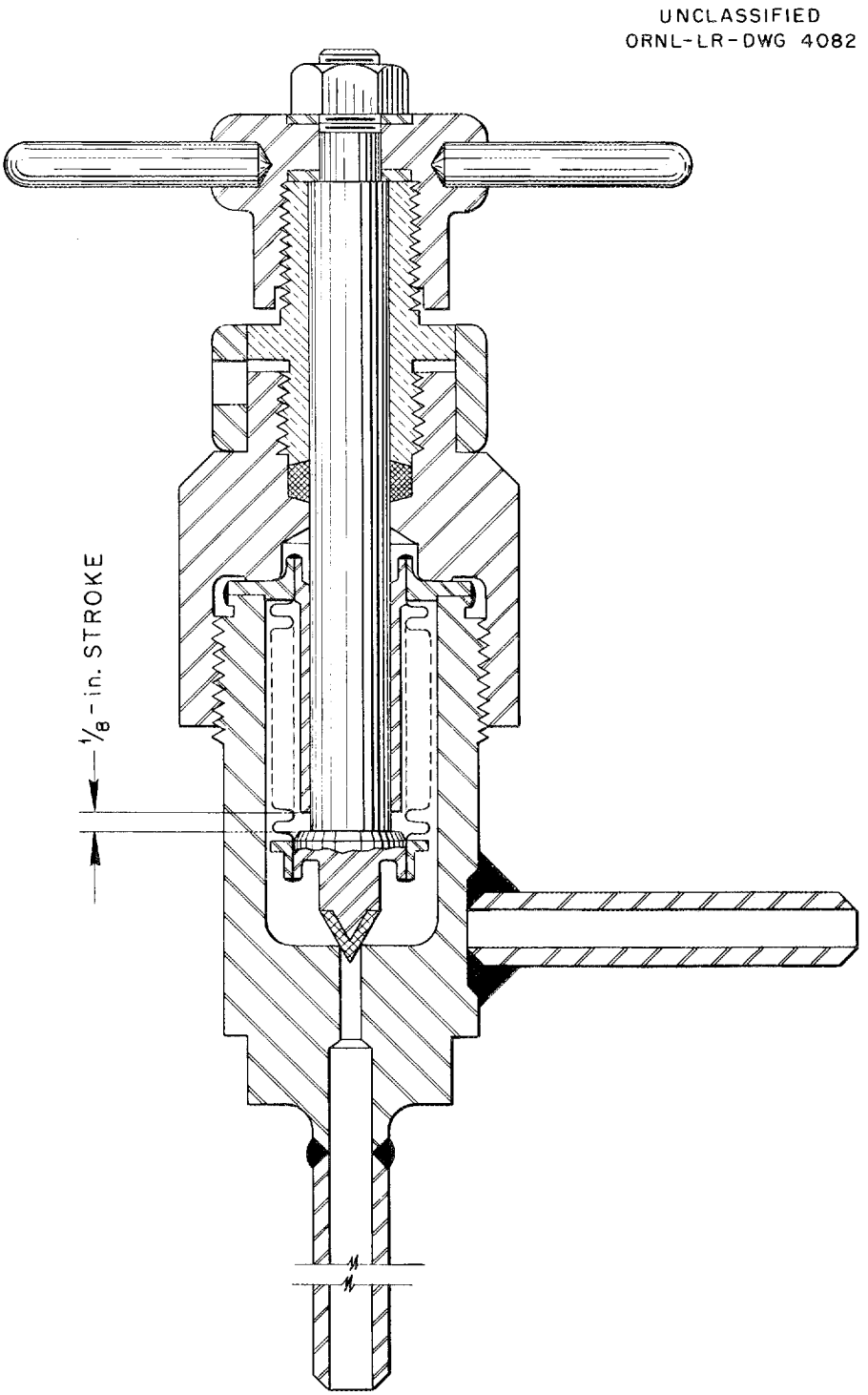

Fig. 53. HRT Chemical Processing Cell High Pressure Valve.

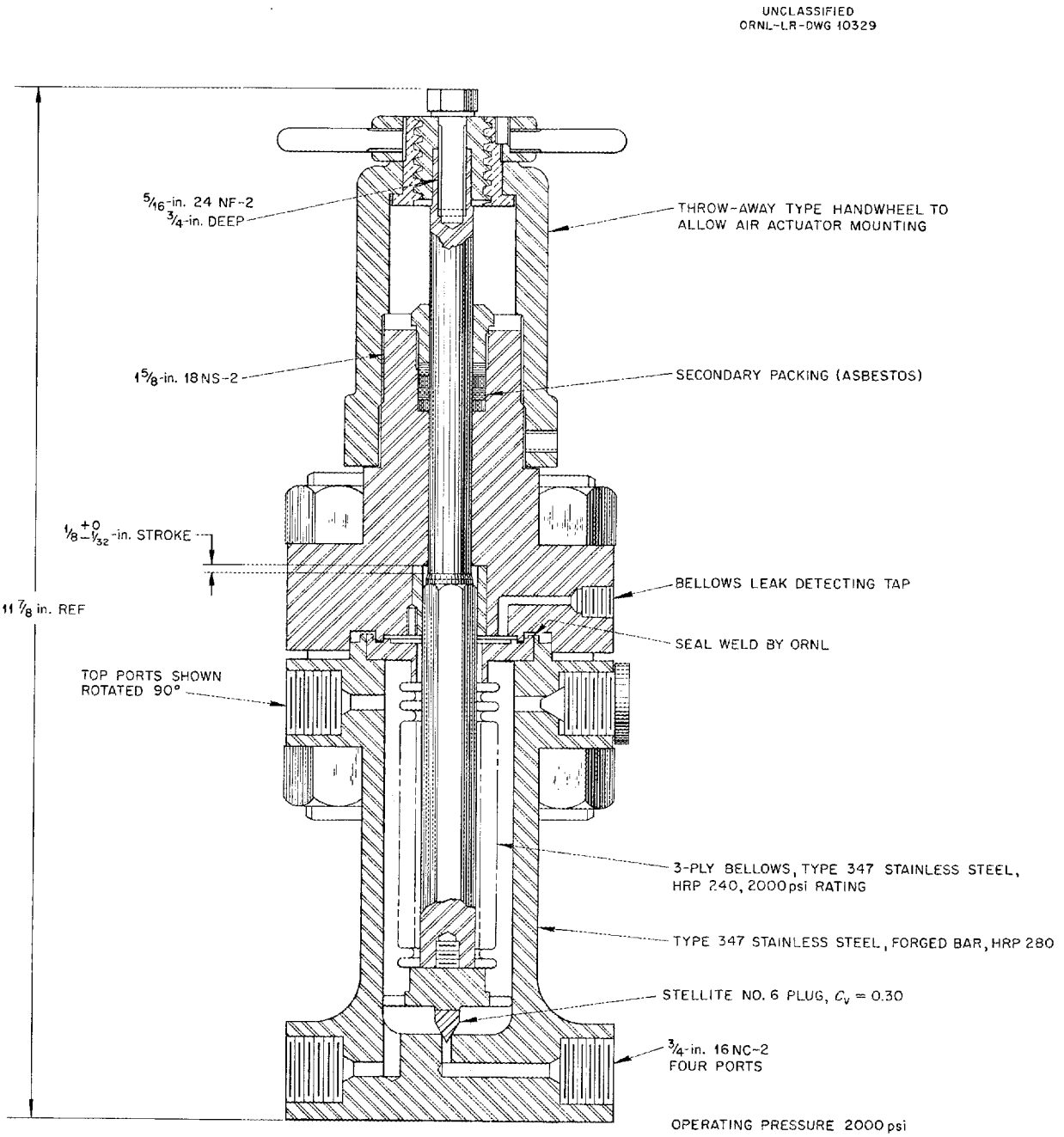

Fig. 54. HRT Chemical Processing Cell Sampling Valve.

UNCLASSIFIED
ORNL-LR-DWG 4081

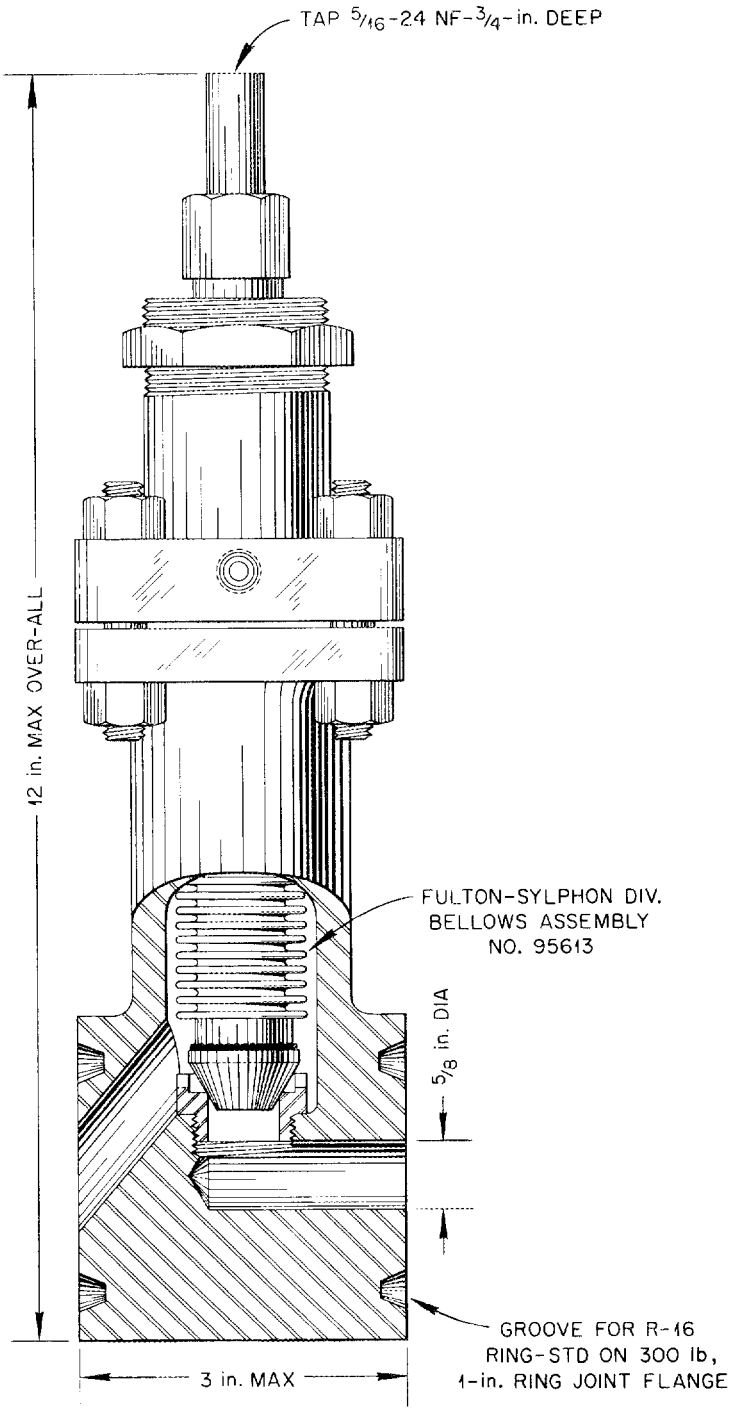

Fig. 55. HRT Chemical Processing Cell Low-Pressure Valve.

UNCLASSIFIED
ORNL-LR-DWG 14051

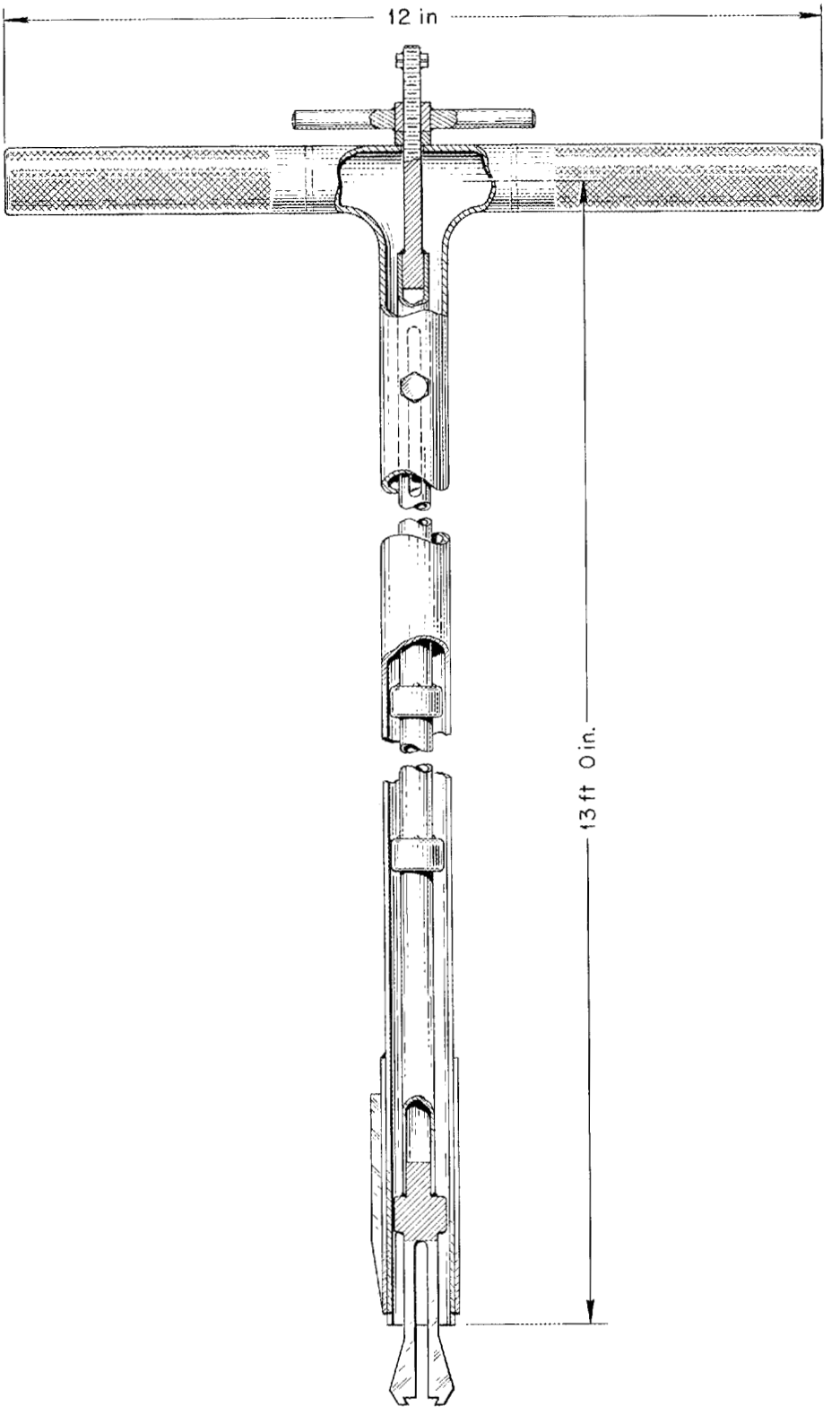

Fig. 56. HRT-CPP Hydroclone Removal Tool.

UNCLASSIFIED
ORNL-LR-DWG 34606

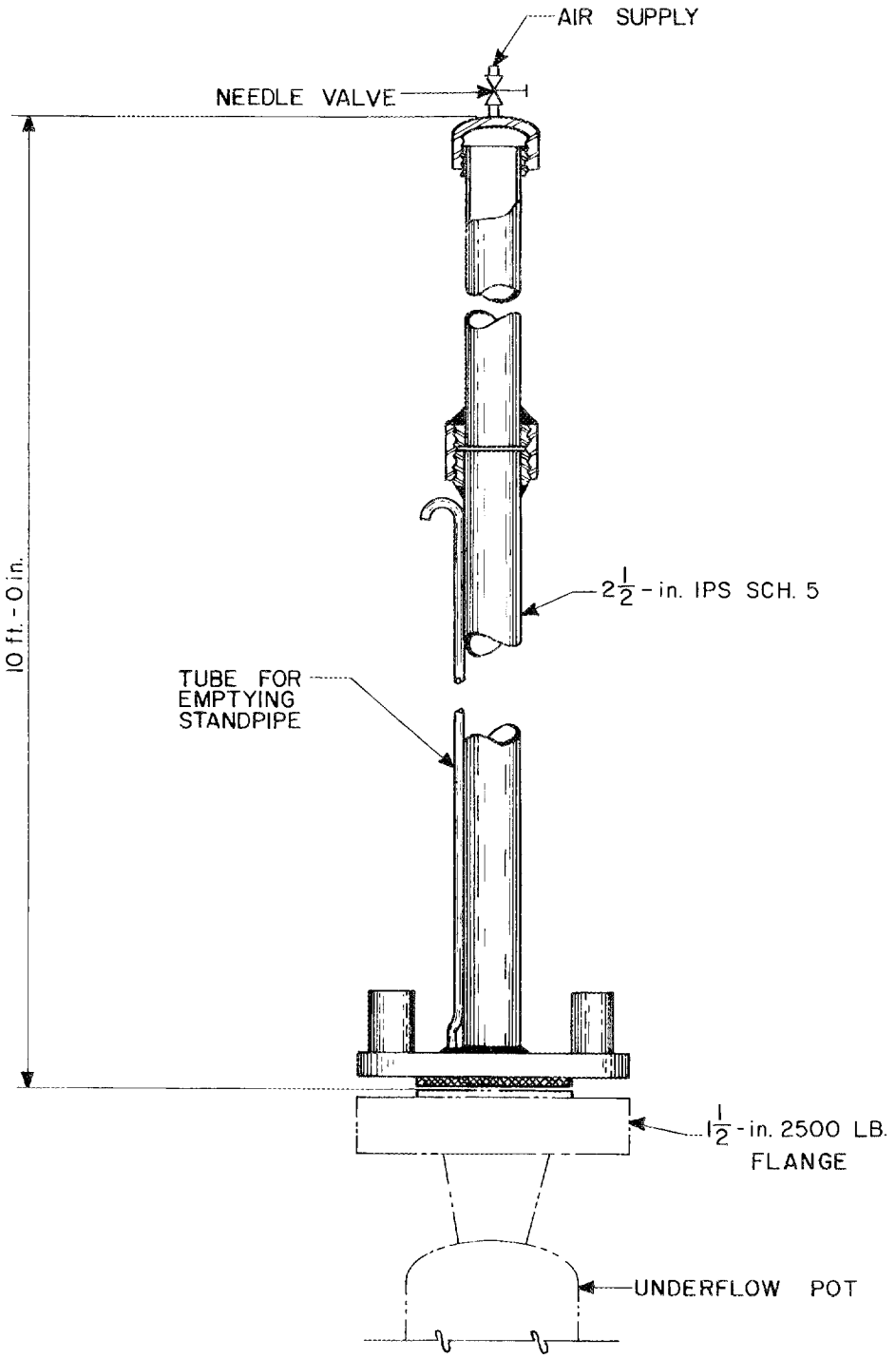

Fig. 57. HRT-CPP Hydroclone Access Standpipe.

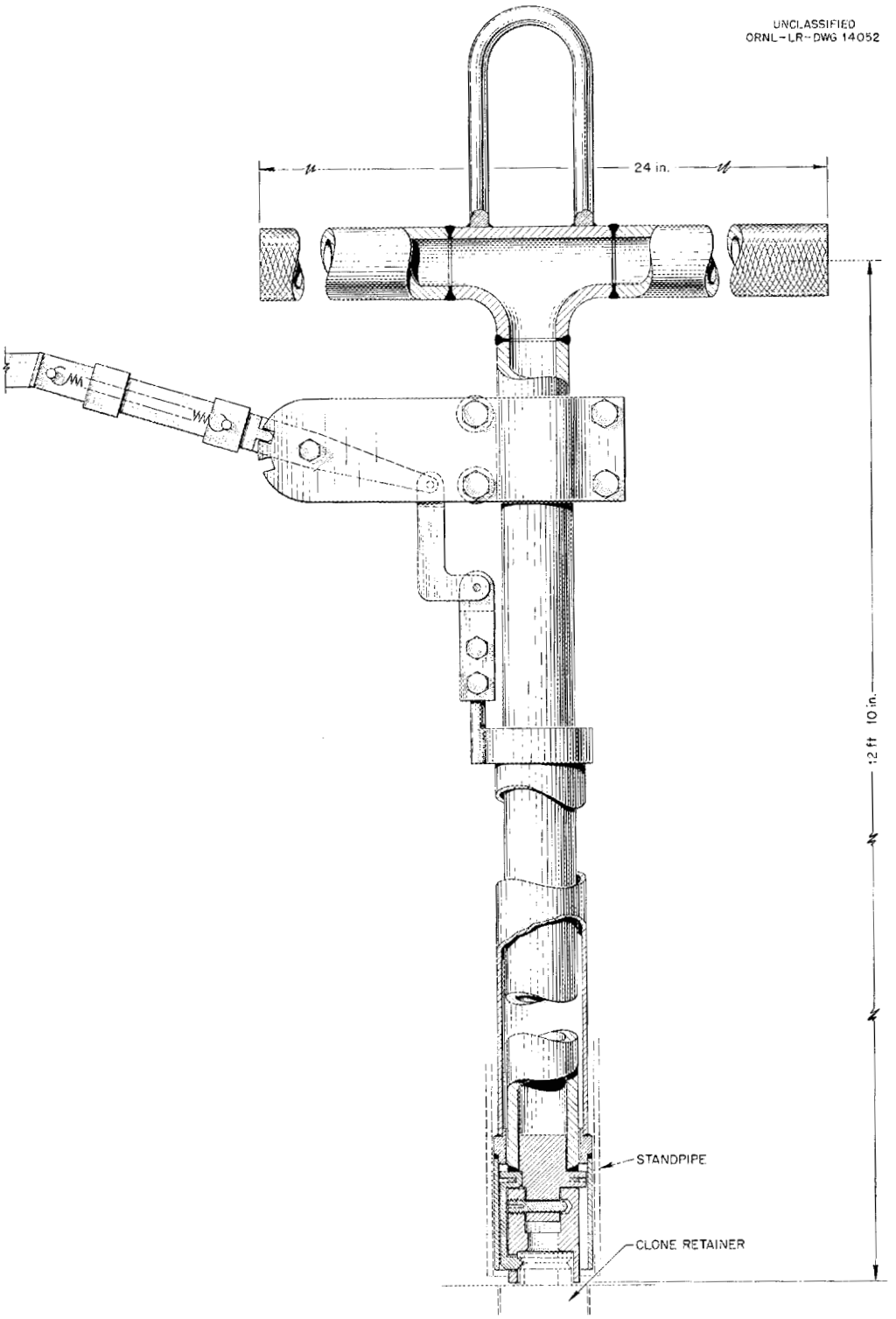

Fig. 58. HRT-CPP Hydroclone Retainer Plug Removal Tool.

UNCLASSIFIED
ORNL-LR-DWG 14053

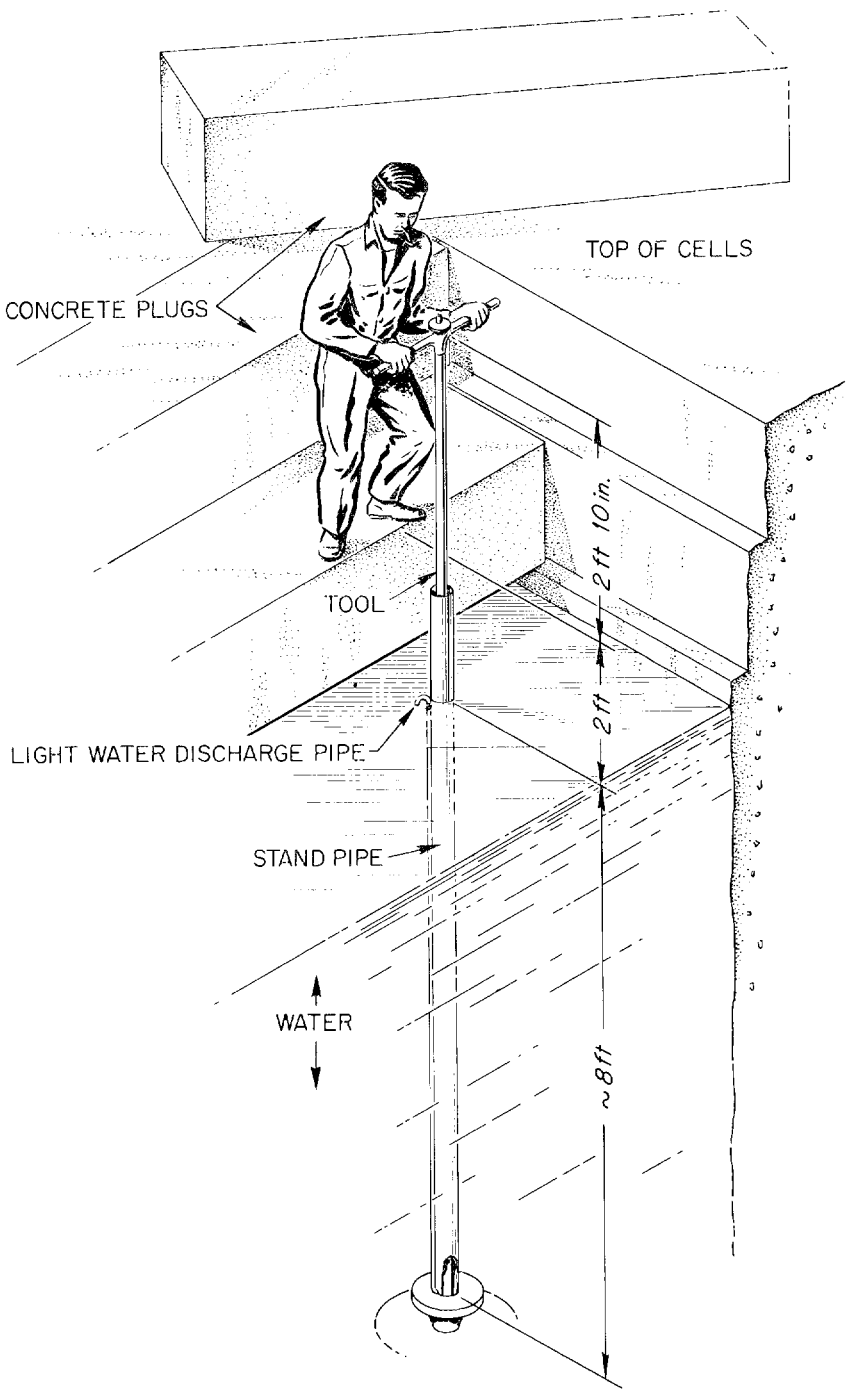

Fig. 59. HRT-CPP Hydroclone Removal Operation.

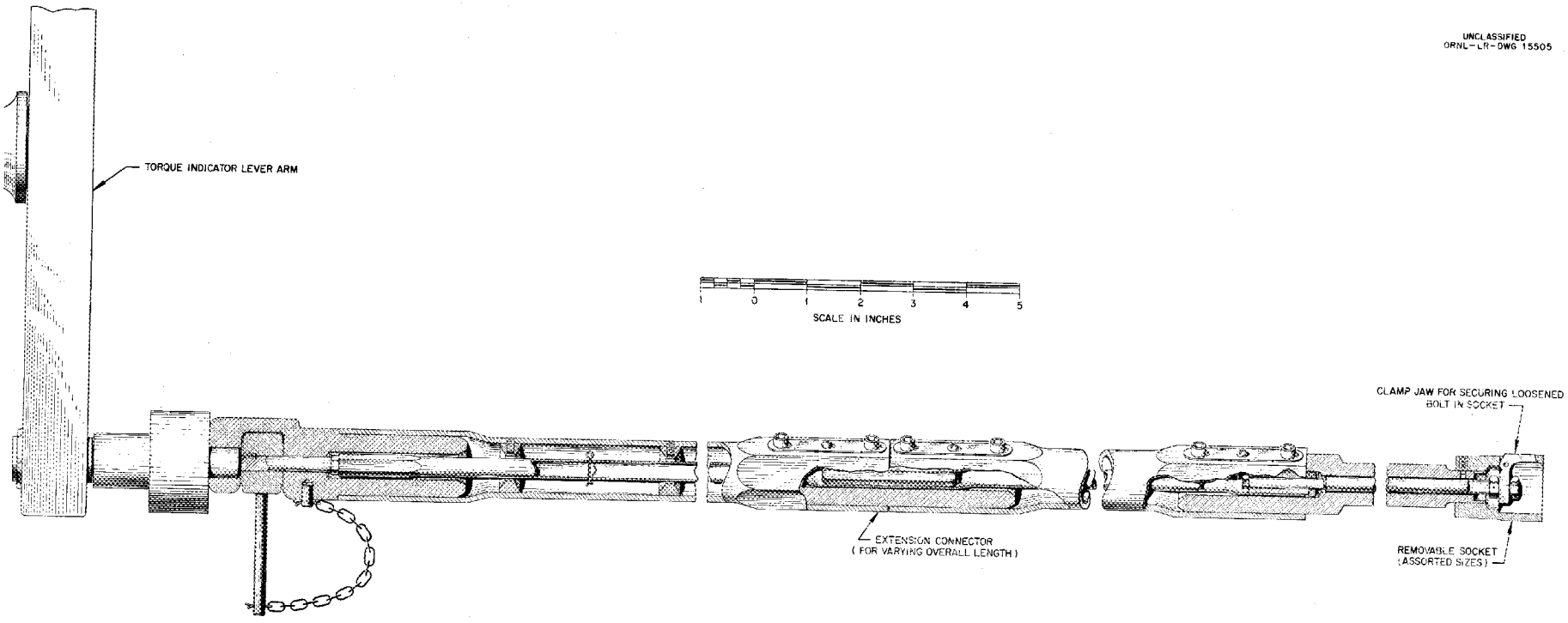

Fig. 60. Valve Wrench Tool for Vertically Mounted Flanges in HRT-CPP.

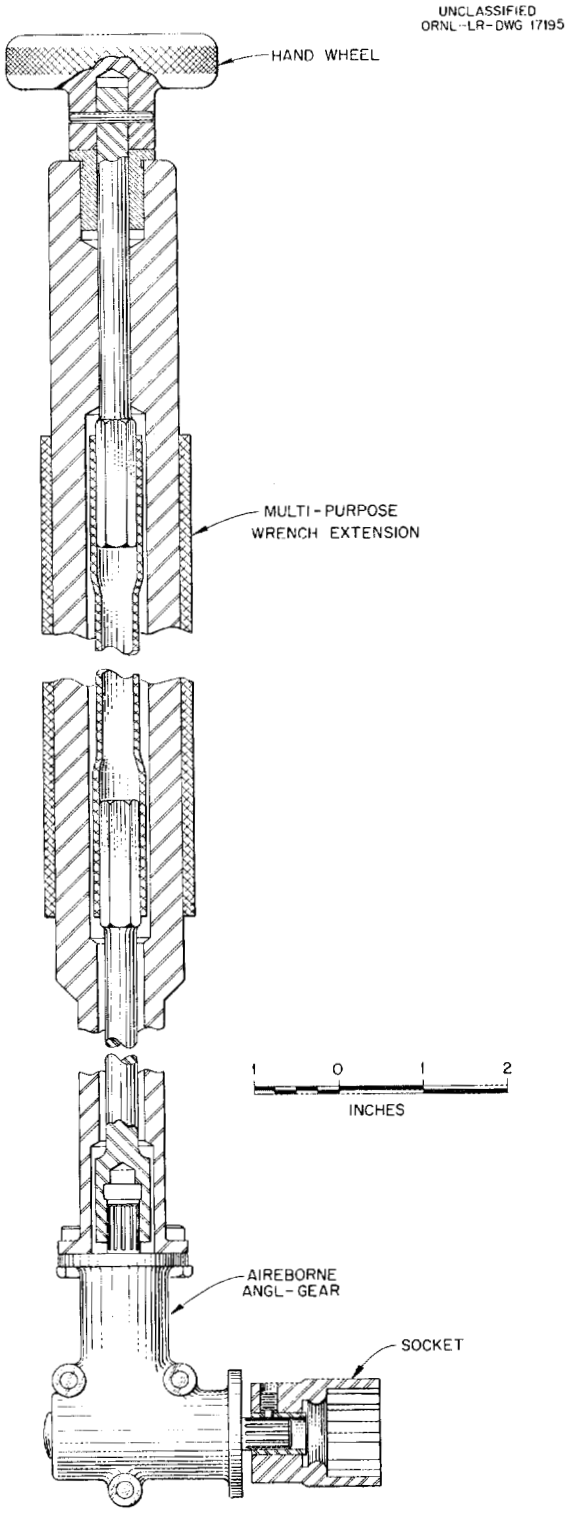

Fig. 61. Remote Right-Angle Starting Wrench for Horizontally Mounted Flanges in HRT-CPP.

UNCLASSIFIED
ORNL-LR-DWG 19950

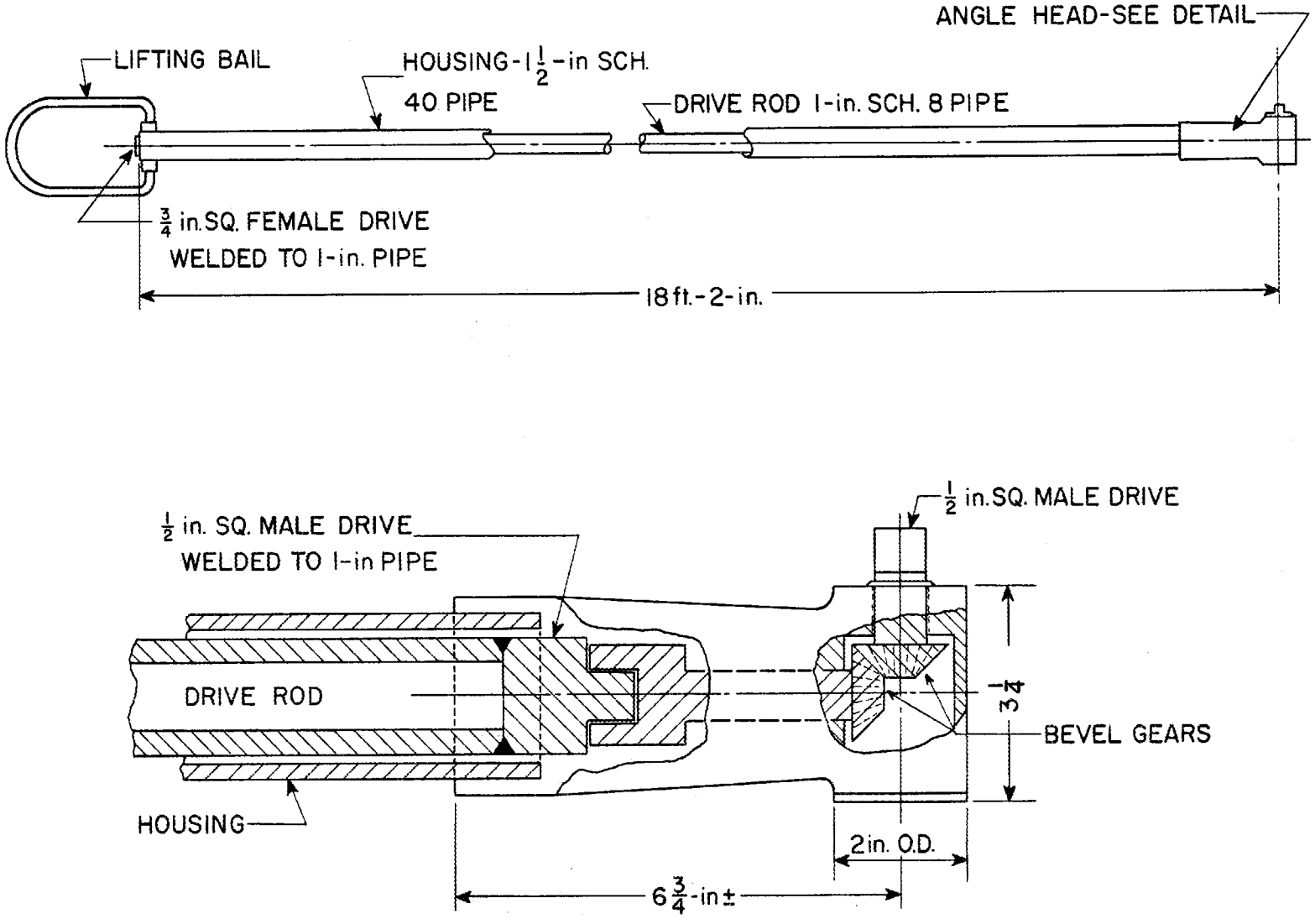

Fig. 62. Remote Right-Angle Drive Wrench for Horizontally Mounted Flanges in HRT-CPP.

is also available, but is seldom used; the other wrenches have proved to be easier to handle. The bolts are removed and replaced with the same long-handled magnet that is used with the vertically-mounted flanges. The bolt holes are aligned with a right-angle alignment pin tool prior to making the flange.

A remote thermocouple-lead cutter is used to cut thermocouple leads close to the process equipment and thereby facilitate the removal of the equipment.

A "vacuum sweeper" rig will be used to prevent gross contamination of the shielding water whenever a flange is broken. This rig consists of a ring designed to fit around a flange that is to be broken; the ring is connected to the suction of the sump jet in the processing cell. In operation, up to 16.5 gpm of water can be removed from the vicinity of the flange and jetted to the waste tank.[24]

9.0 HAZARDS

Two general types of hazards were considered in the design of the processing plant: major disasters, mishaps that would suddenly release large quantities of highly radioactive reactor solution outside the processing cell, and lesser mishaps, accidents in which relatively minor quantities of radioactivity escape from the cell or in which a failure of services causes a disruption in the orderly operation of the plant. Particular emphasis has been placed on preventing or containing the results of a rupture of the high-pressure process piping, since in the event of such a rupture the connection between the reactor and this system would provide a path for escape of the whole reactor inventory. This could easily turn what would otherwise be a minor accident into a major catastrophe.

9.1 Major Disasters

Rupture of High-pressure System. If a major break should occur in the high-pressure piping in the chemical processing cell, the high-temperature reactor solution would at once begin flashing through the break and out into the processing cell. This includes not only the reactor solution held in the chemical processing equipment, but, until the flow is shut off, the solution in the reactor itself. This quantity of solution, if allowed to flash into the chemical processing cell, would substantially raise the pressure in the cell. A cell pressure as high as 90 psia can be expected to follow a serious break if no effort is made to limit or control the pressure rise. Since the chemical processing cell is designed to withstand a maximum internal pressure of 50 psia, it is obvious that some safeguard must be provided to protect against inordinate pressure rises.

The valves between the reactor and the chemical processing cell are instrumented to close whenever a drop in the system pressure indicates a break. If all goes well, therefore, no great amount of reactor solution will flow into the processing cell. It is quite possible, however, that one or both of these valves could fail to close; for this reason these valves alone are not regarded as an adequate safeguard.

It can be seen from the calculations below that the condensation of D_2O vapor that occurs will have a marked effect on the time available for emergency action

between the time the break in the processing equipment occurs and the time the cell pressure reaches the maximum of 50 psia. Even under the worst conditions (no D_2O condensation) at least 35 min will be required for the cell pressure to reach a dangerous level. This is sufficient time for considerable remedial action to be taken to halt the flow of process solution into the cell. The shut-off valves between the reactor and the cell can be manually closed or the reactor can be dumped. Before a really dangerous situation can develop, therefore, four separate and unrelated mishaps must occur: (1) the high-pressure equipment must rupture, (2) one of the reactor shut-off valves must fail to close, (3) the reactor core dump valve must fail to open, and (4) the reactor blanket dump valve must fail to open. The likelihood of the occurrence of this combination of conditions is quite remote; therefore it is not deemed necessary to provide any special devices to reduce the pressure in the chemical processing cell in the event of a rupture of high-pressure equipment.

Leak of High-pressure Solution via Service Lines. A service line connecting to any piece of high-pressure process equipment offers a potential path by which the reactor solution could escape outside the cell. The hazard is particularly serious because, as was the case above, the whole reactor inventory is involved. Only three pieces of high-pressure equipment in the processing plant require a service connection: the pump P-1, the sample cooler H-5, and the underflow pot T-1. The pump and sample cooler are supplied with cooling water and the underflow pot has an air supply for temperature regulation. The hazard of a leak in the underflow pot and the sample cooler is handled in essentially the same way. The cooling water or air is sent through a coil wrapped around the heat transfer surface so that a leak of process solution from any of these vessels will be into the cell, not into the service line. The hazard of a pump leak is guarded against by installing valves on the cooling water supply and discharge lines and instrumenting these valves to close at the appearance of radiation in the cooling water. A rupture disk in the cooling water line will discharge the cooling water into the processing cell if the pressure in the line becomes excessive.

Calculation of Flow Rate of Reactor Solution into Chemical Processing Cell. The quantity of process solution in the high-pressure chemical processing equipment is not great enough to contribute significantly to any pressure rise after an equipment break; almost all the pressure rise will come from the reactor solution flowing through the connecting lines and flashing into the chemical processing cell. An accurate calculation of the flow rate of this solution must therefore be made before the rate of pressure rise and, consequently the time available for emergency action, can be determined.

There are two lines between the reactor core and the chemical processing equipment. Flow in each line is restricted by a high-pressure valve (C_v of 0.3) and the equivalent of 18 ft of 3/8-in. 0.065-in.-wall tubing. The pressure drop across the valve can be determined from the orifice equations since little, if any, flashing of solution will occur in the valve. The calculation of the pressure drop in the process line is more complex, however, since the solution will partially flash to vapor as the pressure on the solution is reduced. It has been found that the flow rate of such a flashing solution increases as the exit pressure is lowered until a critical value is reached. Further lowering of the exit pressure will not increase the flow rate beyond this critical value. This

maximum flow rate can be calculated from the equation[25]

$$\left(\frac{W}{A}\right)^2 \left(\frac{1}{2g}\right)\left(\frac{1}{144}\right) = \frac{\int_{p_1}^{p_2} -\rho\, dp}{Ln\left(\frac{\rho 1}{\rho 2}\right) + \frac{KL}{D}}$$

where W = flow rate of water plus steam, lb/sec
A = cross-sectional area, ft^2
g = 32.2 ft/sec^2
ρ = density of mixture, lb/ft^3
p = pressure, $lb/in.^2$
L = length of pipe, ft
K = friction factor = 0.120
D = diameter of pipe, ft

The density of the mixture varies with the pressure; therefore the solution of the above equation is a stepwise process. The maximum flow rate of process solution from the reactor into the chemical processing cell is found to be 55 lb/min through each processing line, a total of 110 lb/min.

The flow rate of 110 lb/min is a maximum flow rate only, the flow rate that would exist immediately after a break in one of the high-pressure lines in the chemical processing cell, and would not last very long. After 2 min of flow the solution level in the reactor pressurizer would be below the lines connecting with the chemical processing cell. After this drop in reactor level has occurred, only vapor can flow to the chemical processing cell; the increased pressure drop for vapor flow would abruptly reduce the flow to 15 lb/min. The subsequent flow rate could be predicted readily if the reactor pressure could be predicted. Unfortunately, such is not the case. The drop in level of the reactor solution will cause the circulating pump to gas-bind, thereby stopping the flow of solution to the heat exchanger. With the cooling of the core solution thus greatly reduced or eliminated, the core temperature (and pressure) will begin to rise. The extent of this rise will depend on the action taken by the operating personnel, several courses of which are open to them. For purposes of calculation, a constant reactor pressure of 1250 psi was assumed. This reactor pressure will give a constant flow of 15.2 lb/min of vapor to the processing cell.

Pressure Rise in the Chemical Processing Cell. The rate at which the pressure in the chemical processing cell will rise will depend not only on the flow rate of reactor solution into the cell but also on the rate of condensation of vapor on the cell walls. The effect of such condensation is shown in Fig. 63 where two computed pressure-rise curves are shown, one calculated for no vapor condensation and the other for some vapor condensation.

9.2 Lesser Hazards

Leak of Radioactive Solution from Low-pressure System. In the low-pressure system there is little danger of radioactive solution escaping from the cell via the cooling-water lines because the water line pressure is higher than the pressure that will exist in the equipment; all leaks will be into the equipment, not out. A similar situation will exist for the steam lines for as long as the steam is

UNCLASSIFIED
ORNL-LR-DWG 33876

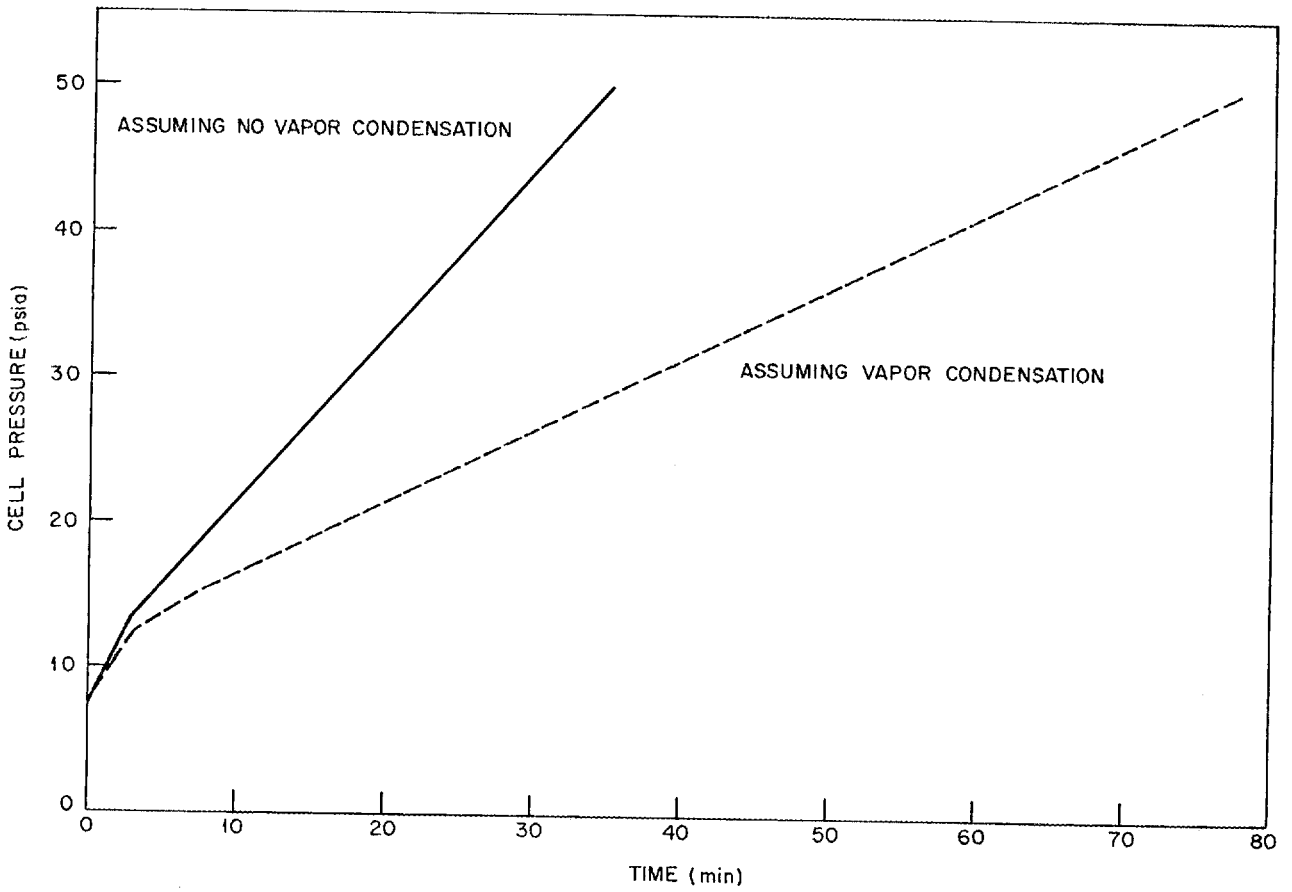

Fig. 63. Computed Pressure Rise in HRT Chemical Processing Cell Following Rupture of High Pressure Equipment.

being used. When the steam service is shut off, however, the condensate return line will provide a possible path by which process solution could leak from a vessel and be carried outside the cell. As a precaution, therefore, all steam condensate lines leaving the chemical processing cell are monitored for radioactivity. Any indication of activity above a certain minimum will activate and close a solenoid valve located at the cell wall on each condensate line. As a further precaution the cooling-water drain lines will be similarly instrumented, with the exception of the line from the cold traps.

Escape of Radioactive Vapor from Processing Cell. The pressure in the processing cell is normally maintained at a pressure of 7.5 psia by a vacuum pump. The line leading to this pump is monitored so that any significant air-borne radiation escaping from the process equipment will be detected and an alarm sounded. If this radiation should exceed a certain minimum value, a valve installed just upstream of the vacuum pump will automatically close, thereby preventing escape of activity from the cell.

A rupture of the chemical processing high-pressure equipment may be violent enough to send fragments of equipment flying around the cell. One of these fragments could cut one of the lines that supply air to the cooling jackets on the underflow pot and thereby provide an escape path for highly radioactive solution to escape from the cell. To safeguard against this possibility, an air-operated valve is installed in each air line and connected to a cell pressure indicator so that any cell pressure above 12 psia will automatically close both valves. The valves will also be closed if a radiation monitor on the air lines detects any activity.

Failure of Services. The chemical processing plant is so designed that the failure of a single service or a combination of services will not lead to damage of the equipment or seriously interfere with operation of the plant. Where practicable, emergency capacity has been provided to lessen the disruption covered by a service failure.

A failure of the instrument air supply would not be critical. There is provision made for emergency capacity if the failure is in the compressor. If the failure should be elsewhere and the emergency supply could not be used, then the various process valves would "fail safe" so that an orderly shutdown could be made without danger or catastrophe.

A failure of the cooling-water service could be due to a failure of the pump or a failure of the cooling-water supply for the heat exchanger. In the event of pump failure the pump will be by-passed and the gravity head of the supply tank will be utilized to force the minimum quantity of cooling water through the system on a once-through basis. In the event of a cooling water supply failure, there will be sufficient water in the supply tank to cool the essential equipment for several hours.

A failure of the refrigeration system for the freeze plugs would cause some difficulties in the operation of the processing plant, but would create no hazardous conditions.

A failure of the steam supply should cause no trouble.

An electrical failure would be the most serious of the service failures because in addition to its direct effects, it would shut off a number of

the other services as well. The direct effect would be limited to shutting down the solution pump P-1 and shutting off heater H-3; the indirect effects would shut off the air stream that regulated the temperature of the underflow pot, restrict the flow of cooling water, shut off the refrigeration system for freeze plugs, and shut off the compressor for the instrument air system. The effect of electric failure on operation of the cooling water, refrigeration, and instrument air systems has already been discussed. The shutting off of the process pump P-1 and heater H-3 will force suspension of operations but will create no hazard. The most serious effect of an electric failure would be the shutting down of the air stream regulating the underflow pot temperature. With this stream shut off, the underflow pot will shortly overheat and cause a phase separation of the uranium solution. For this reason it will be necessary to provide emergency cooling of the underflow pot. Emergency cooling could be provided by discharging gas from cylinders into the air pipes. About five cylinders per hour would be required.

10.0 REFERENCES

1. E. D. Arnold, A. T. Gresky, R. J. Klotzbach, A. R. Irvine, "Preliminary Cost Estimation: Chemical Processing and Fuel Costs for a Thermal Breeder Reactor Power Station," ORNL-1761 (January 27, 1955).

2. D. E. Ferguson, R. E. Leuze, and R. A. McNees, "Predicted Behavior of Fission Products in the HRT," CF-56-2-87.

3. H. E. Williamson, "HRT Solids Production Rate Considerations in Chemical Facility Design," CF-55-7-42.

4. W. L. Carter, "Design Criteria for the HRT Chemical Plant," CF-54-11-190.

5. W. R. Gall, "HRP and HRT Specification List," CF-57-1-136.

6. P. A. Haas, "Hydraulic Cyclones for Application to Homogeneous Reactor Chemical Processing," ORNL-2301 (November 18, 1957).

7. H. O. Weeren, "Deuterium Explosion Hazard in HRT Underflow Pot," CF-56-1-142.

8. "Chemical Technology Division Unit Operations Section Monthly Progress Report, June, 1956," p. 35, CF-56-6-177.

9. H. O. Weeren, "Modifications to Underflow Pot and Cooling System," CF-55-10-83.

10. "Chemical Technology Division Unit Operations Section Monthly Progress Report, July, 1956," p. 47, CF-56-7-150.

11. W.L. Carter, "Sampler Operation and Uranium Peroxide Precipitation in the HRT Chemical Processing Plant," CF-56-4-87.

12. W. L. Carter, "Design and Operation of Fuel Addition System for the HRT Chemical Processing Plant," CF-56-2-109.

13. "Chemical Technology Division Unit Operations Section Monthly Progress Report, October, 1956," p. 19, CF-56-10-83.

14. L. R. Trotter, "Corrosion Studies on Tantalum and Type 347 Stainless Steel in Contact with Cerralow and Mercury," CF-57-8-66.

15. W. L. Carter, "Design Calculations for the Entrainment Separators for the HRT-CPP," CF-56-5-58.

16. P. H. Harley, "Performance Test of HRT Fuel Solution Evaporator and Entrainment Separator," CF-54-10-51.

17. W. L. Carter, "Design Calculations on Superheaters H-7 and H-8 for HRT-CPP," CF-56-5-131.

18. W. L. Carter, "Design and Operation of the Recombiners for the HRT-CPP," CF-56-3-139.

19. W. L. Carter, "Design of Condensers H-1 and H-2 for HRT Chemical Processing Plant," CF-56-3-138.

20. "Homogeneous Reactor Project Quarterly Progress Report for Period Ending October 31, 1956," p. 79, ORNL-2222 (2/5/57).

21. S. Visner, L. C. Noderer, "Criticality of U-235, -H_2O-D_2O Systems in Cylindrical Geometry," CF-54-5-170.

22. J. W. Boyle to B. F. Bottenfield, H. O. Weeren, Memorandum, "Determination of Rate of Hydrogen Evolution from Waste Solutions."

23. C. S. Lisser, "Instrumentation Design Report for the HRT-Core Processing Plant," CF-57-10-131.

24. R. H. Winget, "Vacuum Sweeper, Tests for HRT-CP," CF-56-5-70.

25. M. W. Benjamin, J. C. Miller, "Flow of a Flashing Mixture of Water and Steam through Pipes," (64) Oct. 1942, Trans ASME.

Other reports of interest, not referred to in the text are:

Introduction

26. W. L. Carter, F. C. McCullough, "An Analysis of the Gas Separator for Use as a Solids Concentrator," CF-56-9-24.

27. "HRT Process Flowsheets," CF-55-5-156.

28. R. E. Blanco, H. K. Jackson, W. H. Lewis, E. L. Nicholson, J. W. Ullmann, "Review of HRT Core Processing Plant Design," CF-56-4-171.

29. J. C. Bresee, P. A. Haas, and J. K. Langsdon, "Experimental Evaporator Studies," CF-56-2-156.

Plant Description

30. "Chemical Technology Division Unit Operations Section Monthly Progress Report, December, 1955," p. 12, CF-55-12-154.

31. "Chemical Technology Division Unit Operations Section Monthly Progress Report, January, 1956," p. 28, CF-56-1-175.

32. "Chemical Technology Division Unit Operations Section Monthly Progress Report, May, 1956," p. 42, CF-56-5-197.

Solids Concentration

33. R. B. Lindauer, "Operating Procedure for the HRT Chemical Plant," CF-56-3-32.

34. D. C. Hamilton, et al, "Free Convection in Fluids Having a Volume Heat Source," ORNL-1769.

35. P. A. Haas, J. K. Langsdon, "Heat Removal from a Proposed Hydroclone Underflow Pot Geometry for a Volume Heat Source," CF-55-10-7.

36. "Effect of Copper Catalysts and Recombination Rates," Reactor Science and Technology, TID-2013 (June 1954).

37. W. D. Burch, "Underflow Sampler," CF-55-10-119.

Dissolver System

38. H. O. Weeren, "Suggested Procedure for Operation of the Dissolver System," CF-56-11-24.

Decay Storage System

39. W. R. Gall, R. E. Aven, "Outer Dump Tank Recombiner Program," CF-55-5-187.

Waste Disposal System

40. H. E. Williamson, "HRT Chemical Facility Carrier Shielding Calculations," CF-55-8-174.

Services, Instrumentation, and Tools

41. W. L. Carter, "Design of Leak Detection System for HRT Chemical Processing Plant," CF-55-2-113.

42. R. E. Brooksbank, "Effect of HRT-CP Cooling Water Requirements on the Reactor Circulating Loop," CF-56-11-57.

43. H. A. McLain, R. E. Aven, and R. C. Robertson, "HRT Cooling Water System Modifications," CF-56-8-152.

44. C. C. Haws, Jr., "HRT Chemical Processing Project: Test of Standard Freeze Plugs," CF-55-10-23.

45. R. C. Robertson, H. A. McLain, "Modified HRT Refrigeration System," CF-57-8-67.

46. H. O. Weeren, "Pipe Line Designation Table for the HRT Chemical Processing Plant," CF-56-11-88, Revision 2.

47. R. K. Adams, "Instrument Interlocks for the HRT Chemical Processing Plant," CF-56-2-99.

48. "Homogeneous Reactor Project Quarterly Progress Report for Period Ending April 30, 1957," p. 36, ORNL-2331 (August 14, 1957).

49. "Homogeneous Reactor Project Quarterly Progress Report for Period Ending October 31, 1956," p. 31, February 5, 1957, ORNL-2222.

50. "Homogeneous Reactor Project Quarterly Progress Report for Period Ending July 31, 1956," p. 26, ORNL-2148, September 20, 1956.

51. "Homogeneous Reactor Project Quarterly Progress Report for Period Ending April 30, 1956," p. 42, ORNL-2096, July 6, 1956.

52. R. H. Winget to H. O. Weeren, "Tools for Chemical Plant Underwater Maintenance."

Hazards

53. H. O. Weeren, "Pressure Rise in Chemical Processing Cell Following a Rupture of High Pressure Equipment," CF-55-10-81.

54. H. O. Weeren, "Restricting Flow of Solution from Reactor to Chemical Processing Cell in the Event of a Major Break in Process Piping," CF-55-6-69.

ORNL-2784
Reactors-General
TID-4500 (14th ed.)

INTERNAL DISTRIBUTION

1. C. E. Center
2. Biology Library
3. Health Physics Library
4-5. Central Research Library
6. Reactor Experimental Engineering Library
7-26. Laboratory Records Department
27. Laboratory Records, ORNL R.C.
28. A. M. Weinberg
29. L. B. Emlet (K-25)
30. J. P. Murray (Y-12)
31. J. A. Swartout
32. E. H. Taylor
33. E. D. Shipley
34-35. F. L. Culler
36. M. L. Nelson
37. W. H. Jordan
38. C. P. Keim
39. J. H. Frye, Jr.
40. S. C. Lind
41. A. H. Snell
42. A. Hollaender
43. K. Z. Morgan
44. M. T. Kelley
45. T. A. Lincoln
46. R. S. Livingston
47. A. S. Householder
48. C. S. Harrill
49. C. E. Winters
50. H. E. Seagren
51. D. Phillips
52. W. K. Eister
53. F. R. Bruce
54. D. E. Ferguson
55. R. B. Lindauer
56. H. E. Goeller
57. C. W. Hancher
58. R. A. Charpie
59. J. A. Lane
60. M. J. Skinner
61. R. E. Blanco
62. G. E. Boyd
63. W. E. Unger
64. R. R. Dickison
65. A. T. Gresky
66. E. D. Arnold
67. C. E. Guthrie
68. J. W. Ullmann
69. K. B. Brown
70. K. O. Johnsson
71. J. C. Bresee
72. P. M. Reyling
73. H. O. Weeren
74. A. M. Rom
75. W. L. Carter
76. F. C. McCullough
77. J. C. Suddath
78. B. F. Bottenfield
79. R. H. Winget
80. P. A. Haas
81. G. B. Berry
82. H. F. Bauman
83. S. E. Beall
84. N. C. Bradley
85. J. R. Buchanan
86. W. D. Burch
87. S. R. Buxton
88. J. R. Engel
89. J. D. Flynn, Jr.
90. D. F. Frech
91. R. H. Guymon
92. R. J. Harvey
93. P. N. Haubenreich
94. J. W. Hill, Jr.
95. J. O. Kolb
96. J. L. Redford
97. D. M. Richardson
98. H. C. Roller
99. D. Scott, Jr.
100. L. B. Shappert
101. D. M. Shepherd
102. O. O. Yarbro
103. D. L. Katz (consultant)
104. I. Perlman (consultant)

105. M. Benedict (consultant)
106. C. E. Larson (consultant)
107. H. Worthington (consultant)
108. J. H. Rushton (consultant)
109. ORNL - Y-12 Technical Library, Document Reference Section

EXTERNAL DISTRIBUTION

110. Division of Research and Development, AEC, ORO
111-698. Given distribution as shown in TID-4500 (14th ed.) under Reactors-General category (75 copies - OTS)